REPUBLIC
MISSOURI

AGENDA

City Council Meeting
Municipal Court Building, 540 Civic Blvd
September 19, 2023 at 6:00 PM

Matt Russell, Mayor
Eric Gerke, Ward I
Garry Wilson, Ward II
Christopher Updike, Ward III
Justin Neal, Ward IV

Eric Franklin, Ward I
Gerry Pool, Ward II
Brian Fields, Ward III
Clint Gerlek, Ward IV

Call Meeting to Order

Opening Prayer

Pledge of Allegiance

Swearing In of Appointed Officials

Citizen Participation

Consent Agenda

1. Approve September 29, 2023 City Council Minutes.
2. Approve September 7, 2023 City Council Special Session Minutes.
3. Approve Vendor List.
4. Approve Utility Billing Adjustments.
5. 23-R-54 A Resolution of the City Council Authorizing the City Administrator to Submit a Renewal Application for Hall Provider of Bingo Premises.

Board, Commission, and Committee Schedule

Planning & Zoning Meeting	October 2, 2023
City Council Meeting	October 3, 2023
Board of Adjustment Meeting	October 5, 2023-Cancelled
City Council Meeting	October 17, 2023

Old Business and Tabled Items

6. 23-30 An Ordinance of the City Council Approving Amendment of the Zoning Classification of Approximately Ten Point Four-Four (10.44) Acres, Located at 688 South Kansas Avenue, from Agricultural (AG) and Medium Density Single-Family (R1-M) to Two-Family Residential (R-2).

New Business (First Reading of Ordinances)

7. 23-35 An Ordinance of the City Council Approving a Special Use Permit for Melanie Fergason to Operate Republic Animal Hospital on Real Property Located at 542, 546, 550, and 554 East Harrison Street.
8. 23-36 An Ordinance of the City Council Approving Amendment of the Zoning Classification of Approximately Fifteen Acres, Located at 1230 South State Highway MM, from Agricultural (AG) to Heavy Industrial (M-2).
9. A Public Hearing of the City Council Regarding Approving the Annexation of Approximately 40.456 Acres Located at 7217 West Farm Road 182 and Adjacent Right-of-Way.
10. 23-37 An Ordinance of the City Council Approving the Annexation of Approximately 40.456 Acres Located at 7217 West Farm Road 182 and Adjacent Right-of-Way.

Individuals addressing the Council are asked to step to the microphone and clearly state their name and address before speaking. In accordance with ADA guidelines, if you need special accommodations to attend any city meeting, please notify the City Clerk's Office at 417-732-3101 at least three days prior to the scheduled meeting. **All meetings are recorded for public viewing**.

11. 23-38 An Ordinance of the City Council Approving Amendment of the Zoning Classification of Approximately 40 Acres of Real Property Located at the Intersection of South Farm Road 101 and West Farm Road 170, from Planned Development District (PDD) to Boyce Mixed-Use Planned Development District (PDD).

12. 23-39 An Ordinance of the City Council Approving Amendment of the Zoning Classification of Approximately 17.19 Acres, Located at 3020 and 2946 North York Avenue, from Agricultural (AG) to 6-Point Junction Planned Development District (PDD).

13. 23-40 An Ordinance of the City Council Amending Title IV ("Land Use"), Chapter 410 ("Subdivision Regulations") of the Municipal Code of the City of Republic, Missouri.

14. 23-41 An Ordinance of the City Council Approving and Adopting Standard Specifications and Details for Water and Sewer Construction, to Replace the Current Construction Specifications and Stormwater Management and Design Criteria Manual, and Amending Title V, Chapter 510, Article 510-IV, Section 510.120 ("Construction Specifications and Replacing the Construction Specifications for Public Improvements") of the Municipal Code of the City of Republic, Missouri to Reference the Specifications Adopted Herein.

15. 23-42 An Ordinance of the City Council Approving and Adopting a Stormwater Management and Design Criteria Manual.

16. 23-43 An Ordinance of the City Council Amending Title II, Chapter 215, Article 215-IV of the Municipal Code of the City of Republic, Missouri, by Repealing Subsection (G) of Section 215.840 ("Weapons-Carrying Concealed-Other Unlawful Use").

17. 23-44 An Ordinance of the City Council Approving the Final Plat of the Iron Grain Planned Development District Phase One.

Other Business (Resolutions)

18. 23-R-55 A Resolution of the City Council Amending Resolution 23-R-44 and Authorizing the City Administrator to Execute An Agreement With Redec, LLC for Continuation of Professional Services for 2023-2024 in Connection with the City's Efforts to Obtain Funding for its New Wastewater Treatment System.

Reports from Staff

Executive Session: *No further action, other than announcing adjournment by the Mayor, shall take place after an Executive Session that is scheduled as the last matter on the Agenda unless otherwise stated on the Agenda or as allowed per RSMo. 610.021.*

1. RSMo 610.021.2 Real Estate Acquisition. Closed session. Closed vote. Closed record.

2. RSMo 610.021.13 Individually identifiable personnel records, performance ratings or records pertaining to employees or applicants for employment. Closed session. Closed vote. Closed record.

Adjournment

Matt Russell, Mayor
Eric Gerke, Ward I
Garry Wilson, Ward II
Christopher Updike, Ward III
Eric Franklin, Ward I
Gerry Pool, Ward II
Clint Gerlek, Ward IV

MINUTES

City Council Meeting
Municipal Court Building, 540 Civic Blvd
August 29, 2023 at 6:00 PM

Call Meeting to Order

The regular session meeting of the City Council of the City of Republic, Greene County, Missouri, was called to order by Mayor Matt Russell at 6:00 p.m. Council Members present included Eric Franklin, Garry Wilson, Eric Gerke, Chris Updike, and Clint Gerlek. Others in attendance were: City Administrator David Cameron, Chief of Staff Lisa Addington, City Attorney Megan McCullough, BUILDS Administrator Karen Haynes, Police Chief Brian Sells, Athletics Administrator Garrett Cline, Assistant BUILDS Administrator Garrett Brickner, Fire Chief Duane Compton, Assistant City Administrator/Parks and Recreation Director Jared Keeling, Principal Planner Chris Tabor, Associate Planner Patrick Ruiz, GIS Manager Josh Jones, Data and Security Supervisor Michael Sallee, City Clerk Laura Burbridge, and Finance Director Bob Ford.

Opening Prayer

Opening prayer was led by City Administrator David Cameron.

Pledge of Allegiance

The Pledge of Allegiance was led by Mayor Matt Russell.

Citizen Participation

Mayor Russell opened citizen participation at 6:01 p.m. No one came forward so Mayor Russell closed citizen participation at 6:01 p.m.

Consent Agenda

Motion was made by Council Member Updike and seconded by Council Member Franklin to approve the consent agenda. The vote was 5 Aye-Franklin, Gerke, Gerlek, Updike, and Wilson. 0 Nay. Motion Carried.

1. Approve August 22, 2023 City Council Meeting Minutes.

Board, Commission, and Committee Schedule

City Council Meeting	September 5, 2023-Cancelled
Board of Adjustment Meeting	September 7, 2023-Cancelled
Planning & Zoning Meeting	September 11, 2023
City Council Meeting	September 19, 2023

Old Business and Tabled Items

2. **23-27 An Ordinance of the City Council Approving Execution of a Developer Agreement with Shuyler Ridge LLC for Development of Phase Four of The Lakes at Shuyler Ridge Subdivision.**

   Motion was made by Council Member Franklin and seconded by Council Member Updike to have the second reading of Bill 23-27 by title only. The vote was 5 Aye-Franklin, Gerke, Gerlek, Updike, and Wilson. 0 Nay. Motion Carried. Chris Tabor was available to answer questions. Council Member Wilson motioned for the passage of Bill 23-27. Council Member Franklin seconded. A roll call vote was taken digitally. The vote was 5 Aye-Franklin, Gerke, Gerlek, Updike, and Wilson. 0 Nay. Motion Carried.

DRAFT

3. **23-28 An Ordinance of the City Council Approving a Special Use Permit for Gator State Storage FP, LLC to Operate a Boat, Vehicle, and Self-Storage Facility on Real Property Located at 111 and 107 West Broad Street.**

   Motion was made by Council Member Franklin and seconded by Council Member Updike to have the second reading of Bill 23-28 by title only. The vote was 5 Aye-Franklin, Gerke, Gerlek, Updike, and Wilson. 0 Nay. Motion Carried. Patrick Ruiz was available to answer questions. Council Member Updike motioned for the passage of Bill 23-28. Council Member Franklin seconded. A roll call vote was taken digitally. The vote was 5 Aye-Franklin, Gerke, Gerlek, Updike, and Wilson. 0 Nay. Motion Carried.

4. **23-29 An Ordinance of the City Council Approving Amendment of the Zoning Classification of Approximately 203.39 Acres, Located at 1462 South State Highway MM, from Agricultural (AG) to Garrett Farm Planned Development District (PDD).**

   Motion was made by Council Member Wilson and seconded by Council Member Franklin to have the second reading of Bill 23-29 by title only. The vote was 5 Aye-Franklin, Gerke, Gerlek, Updike, and Wilson. 0 Nay. Motion Carried. Chris Tabor was available to answer questions. Council Member Updike motioned for the passage of Bill 23-29. Council Member Gerke seconded. A roll call vote was taken digitally. The vote was 5 Aye-Franklin, Gerke, Gerlek, Updike, and Wilson. 0 Nay. Motion Carried.

5. **23-31 An Ordinance of the City Council Approving Budget Amendment No. 1 to the Budget for the Fiscal Year 2023.**

   Motion was made by Council Member Gerke and seconded by Council Member Updike to have the second reading of Bill 23-31 by title only. The vote was 5 Aye-Franklin, Gerke, Gerlek, Updike, and Wilson. 0 Nay. Motion Carried. Bob Ford was available to answer questions. Council Member Wilson motioned for the passage of Bill 23-31. Council Member Updike seconded. A roll call vote was taken digitally. The vote was 5 Aye-Franklin, Gerke, Gerlek, Updike, and Wilson. 0 Nay. Motion Carried.

6. **A Public Hearing of the City Council Regarding Setting the 2023 Property Tax Levies for the City of Republic, Missouri.**

   Mayor Russell opened the public hearing at 6:06 p.m. No one came forward so Mayor Russell closed the public hearing at 6:06 p.m.

7. **23-32 An Ordinance of the City Council Setting the 2023 Property Tax Levies for the City of Republic, Missouri.**

   Motion was made by Council Member Wilson and seconded by Council Member Updike to have the second reading of Bill 23-32 by title only. The vote was 5 Aye-Franklin, Gerke, Gerlek, Updike, and Wilson. 0 Nay. Motion Carried. Bob Ford was available to answer questions. Council Member Updike motioned for the passage of Bill 23-32. Council Member Gerke seconded. A roll call vote was taken digitally. The vote was 5 Aye-Franklin, Gerke, Gerlek, Updike, and Wilson. 0 Nay. Motion Carried.

8. **23-33 An Ordinance of the City Council Approving the Final Plat of Wilson's Valley Planned Development District Phase One.**

   Motion was made by Council Member Wilson and seconded by Council Member Gerke to have the second reading of Bill 23-33 by title only. The vote was 5 Aye-Franklin, Gerke, Gerlek, Updike, and Wilson. 0 Nay. Motion Carried. Chris Tabor was available to answer questions. Council

DRAFT

Member Updike motioned for the passage of Bill 23-33. Council Member Franklin seconded. A roll call vote was taken digitally. The vote was 5 Aye-Franklin, Gerke, Gerlek, Updike, and Wilson. 0 Nay. Motion Carried.

9. **23-34 An Ordinance of the City Council Approving Execution of a Developer Agreement with Wilson's Valley, LLC for the Deferment of Certain Infrastructure Obligations in Exchange for the Developer's Dedication of Right-of-Way to the City.**

   Motion was made by Council Member Wilson and seconded by Council Member Updike to have the second reading of Bill 23-34 by title only. The vote was 5 Aye-Franklin, Gerke, Gerlek, Updike, and Wilson. 0 Nay. Motion Carried. Chris Tabor was available to answer questions. Council Member Updike motioned for the passage of Bill 23-34. Council Member Franklin seconded. A roll call vote was taken digitally. The vote was 5 Aye-Franklin, Gerke, Gerlek, Updike, and Wilson. 0 Nay. Motion Carried.

New Business (First Reading of Ordinances)-None

Other Business (Resolutions)-None

Reports from Staff

City Administrator David Cameron noted this meeting was all second reads and the discussion for those items was held at the previous meeting. Mr. Cameron added we moved the meetings back in August due to the tax levy coming to us mid August. Mr. Cameron reminded everyone we had a heavy agenda last Tuesday and thanked Council and staff for attending.

City Administrator David Cameron thanked staff for the quick repair to Well #3, adding the parts were received within 24 hours. Our purchasing ordinance requires that if any emergency expense goes over $100,000.00, it requires the consent from the Mayor, which was granted. Mr. Cameron reported he is required to notify the Council per our ordinance regarding emergency expenses.

City Administrator David Cameron reported significant hail damage this spring with several buildings suffering roof damage. Mr. Cameron notified the Council that with the emergency repairs needed due to leaks, this will be over $200,000.00 up front, but was all one event, so our deductible is $2,500.00. Mr. Cameron noted that while insurance will be reimbursing the full cost minus the deductible, he is reporting the expense due to signing a contract over $200,000.00 with the roofing company. Mr. Cameron shared his appreciation for the work done on that.

City Administrator David Cameron reminded everyone that Utility Billing will be moving to the BUILDS Building on September 20th. We will continue to have a payment drop box at City Hall.

City Administrator David Cameron reported that he, Bob Ford, and Garrett Brickner traveled to Jefferson City last month to meet with the Missouri Department of Natural Resources. Mr. Cameron reminded everyone that we were allocated $25 million in ARPA funds in 2022 and $25 million in the state's general revenue budget for the Wastewater Treatment Plant in 2023. Mr. Cameron notified Council we will start receiving reimbursements from the state and appreciates the work done by the state to assist us in bringing our facility to compliance.

City Administrator David Cameron reported that he and Mayor Russell will be conducting interviews tomorrow for the vacant Council seats in Ward III and Ward IV. Mr. Cameron noted we failed a final plat last week due to the size of Council, adding we will bring it back for a first read, and there is not a 6-month waiting period required.

Council Member Updike expressed his condolences to the family of the high schooler lost last night.

Council Member Franklin thanked everyone for their Well #3 efforts. Mr. Franklin also thanked the citizens for conserving water.

Council Member Gerlek noted that two Council Members have voluntarily resigned, but we still have a Council Member absent multiple weeks in a row, and we need to address that as it is important for the citizens to have representation. Per the city Charter, if 3 meetings are missed in a row, it is an automatic removal unless Council votes to excuse the absences. City Attorney Megan McCullough noted it is not specific but clearly says a member shall forfeit office after 3 consecutive meetings without excuse by the Council. We will place this discussion on the September 19th agenda for discussion and a vote by the Council in public session.

Mayor Russell thanked everyone for coming to the meeting and noted he is glad the kids are back in school.

Executive Session: *No further action, other than announcing adjournment by the Mayor, shall take place after an Executive Session that is scheduled as the last matter on the Agenda unless otherwise stated on the Agenda or as allowed per RSMo. 610.02.*

1. RSMo 610.021.12 Any documents related to a negotiated contract until a contract is executed, or all proposals are rejected. Closed session. Closed vote. Closed record.

2. RSMo 610.021.13 Individually identifiable personnel records, performance ratings or records pertaining to employees or applicants for employment. Closed session. Closed vote. Closed record.

Motion was made by Council Member Updike and seconded by Council Member Franklin at 6:19 p.m. to go into Executive Session under RSMo 610.021.12 Any documents related to a negotiated contract until a contract is executed, or all proposals are rejected. Closed session. Closed vote. Closed record., and RSMo 610.021.13 Individually identifiable personnel records, performance ratings and records pertaining to employees or applicants for employment. Closed session. Closed vote. Closed record. A roll call vote was taken. The vote was 5 Aye – Franklin, Updike, Wilson, Gerlek, Gerke. 0 Nay. Motion carried.

Motion was made by Council Member Franklin and seconded by Council Member Updike to adjourn the Executive Session Meeting at 7:03 p.m. A roll call vote was taken. The vote was 5 Aye – Gerke, Gerlek, Updike, Wilson, and Franklin. 0 Nay. Motion carried.

ATTEST:

_____ _____

Laura Burbridge, City Clerk Matt Russell, Mayor

DRAFT

Matt Russell, Mayor
Eric Gerke, Ward I
Garry Wilson, Ward II
Christopher Updike, Ward III
Justin Neal, Ward IV

Eric Franklin, Ward I
Gerry Pool, Ward II
Brian Fields, Ward III
Clint Gerlek, Ward IV

MINUTES

City Council Meeting
Online Zoom Meeting
September 07, 2023 at 5:30 PM

Call Meeting to Order

The special session meeting of the City Council of the City of Republic, Greene County, Missouri, was called to order by Mayor Matt Russell at 5:48 p.m. Council Members present included Eric Franklin, Garry Wilson, Eric Gerke, Chris Updike, and Clint Gerlek. Others in attendance were: City Administrator David Cameron, City Attorney Megan McCullough, BUILDS Administrator Karen Haynes, Police Chief Brian Sells, Assistant BUILDS Administrator Garrett Brickner, Assistant City Administrator/Parks and Recreation Director Jared Keeling, Data and Security Supervisor Michael Sallee, City Clerk Laura Burbridge, and Chief of Staff Lisa Addington.

Other Business (Resolutions)

1. 23-R-52 A Resolution of the City Council Appointing a Council Member for Ward III.

   Mayor Russell announced that he has selected Brian Fields to fill the vacant Ward III Council Member seat. Mayor Russell answered questions of Council. The vote was 5 aye-Franklin, Gerke, Gerlek, Updike, and Wilson. 0 Nay. Motion Carried.

2. 23-R-53 A Resolution of the City Council Appointing a Council Member for Ward IV.

   Mayor Russell announced that he has selected Justin Neal to fill the vacant Ward IV Council Member seat. Mayor Russell answered questions of Council. The vote was 5 aye-Franklin, Gerke, Gerlek, Updike, and Wilson. 0 Nay. Motion Carried.

Adjournment

Mayor Russell adjourned the meeting at 5:53 p.m.

ATTEST:

_____ _____

Laura Burbridge, City Clerk Matt Russell, Mayor

DRAFT

City of Republic

Vendor Audit Report

For Date Range 08/01/2023 - 09/30/2023

Vendor	Added	Added User	Deleted	Deleted User
08123 - Bomgaars Supply Inc	08/02/2023	SHERRI WOODS		
08124 - Ginger Goodman	08/02/2023	SHERRI WOODS		
08125 - Casandra Freeland	08/03/2023	SHERRI WOODS		
08126 - Eric Taylor	08/03/2023	SHERRI WOODS		
08127 - Rylee Moorefield	08/07/2023	SHERRI WOODS		
08128 - ARC Physical Therapy Plus	08/07/2023	SHERRI WOODS		
08129 - Hot Shots Ventures LLC	08/07/2023	SHERRI WOODS		
08130 - Questica LTD	08/09/2023	SHERRI WOODS		
08131 - Jake Jones	08/09/2023	SHERRI WOODS		
08132 - AARC Consultants LLC	08/09/2023	SHERRI WOODS		
08133 - Robert J Dimery	08/10/2023	SHERRI WOODS		
08135 - Leah Marie Clark	08/11/2023	SHERRI WOODS		
08136 - Tamra Whittaker	08/11/2023	SHERRI WOODS		
08137 - Jackson Stewart	08/15/2023	SHERRI WOODS		
08138 - Analee Devol	08/15/2023	SHERRI WOODS		
08139 - Logan Cash	08/15/2023	SHERRI WOODS		
08140 - RoadSafe Traffic Systems Inc	08/16/2023	SHERRI WOODS		
08141 - Bradley Beach	08/16/2023	SHERRI WOODS		
08142 - Rose Marie White	08/16/2023	SHERRI WOODS		
08143 - Jaidyn Thornton	08/17/2023	SHERRI WOODS		
08144 - Furry Friends of SW MO	08/21/2023	SHERRI WOODS		
08145 - Kelsey Len Whitcomb	08/23/2023	SHERRI WOODS		
08146 - Bates County Courthouse	08/24/2023	SHERRI WOODS		
08147 - Jared Melton	08/30/2023	SHERRI WOODS		
08148 - Joel Walton	08/30/2023	SHERRI WOODS		
08149 - Kathy Allen	08/30/2023	SHERRI WOODS		
08150 - Newstream Enterprises LLC	08/30/2023	SHERRI WOODS		
08151 - Siscillea Motley	08/30/2023	SHERRI WOODS		
08152 - Training Network LLC	08/31/2023	SHERRI WOODS		
2971 - Gannett Media Corp				

Vendor Count: (30)

REPUBLIC MISSOURI

Utility Billing Adjustments

Date	Customer	Overread/Leak	Leak In	Gallons Billed	Water Gallons Adjusted	Amount Adjusted	Sewer Gallons Adjusted	Amount Adjusted
3/28/2023	Child Life Academy	Leak	Toilet Leak	62930	28,040	116.55	28,040	425.93
4/10/2023	Chase & Shelby Simmerman	Leak	Service line	55900	26,250	100.89	52,500	797.48
4/11/2023	Diane Haggard	Overread	Overread	7200	5,700	21.91	5,700	86.58
4/11/2023	Diane Haggard	Overread	Overread	4300	2,800	10.76	2,800	42.53
4/13/2023	Alysha & Dale Range	Leak	Toilet Leak	30300	12,383	47.59	12,383	188.11
4/13/2023	Alysha & Dale Range	Leak	Toilet Leak	18100	6,283	24.15	6,283	95.45
4/17/2023	Jim Burke	Leak	Water Heater Leak	15900	5,420	20.83	5,420	82.33
4/17/2023	Jim Burke	Leak	Water Heater Leak	11100	3,020	11.61	3,020	45.87
4/19/2023	Sarah Villines	Leak	Water Heater Leak	6900	2,083	8.01	2,083	31.65
4/24/2023	Robin Billing	Leak	Service line	25100	11,233	43.17	22,467	341.27
4/24/2023	Charlie James	Leak	Toilet Leak	6820	2,488	9.56	2,488	37.80
4/24/2023	Charlie James	Leak	Toilet Leak	5380	1,768	6.80	1,768	26.86
4/24/2023	Jamie L Bishop	Leak	Line under house	8870	3,254	12.51	6,508	98.86
4/25/2023	Hood Methodist Church	Leak	City Side Leak	105830	104,330	397.50	104,330	1,584.77
4/25/2023	Tiffany & David Meyer	Leak	Service line	19800	7,008	26.93	14,017	212.92
4/25/2023	Tiffany & David Meyer	Leak	Service line	15810	5,013	19.27	10,027	152.31
4/25/2023	Oscar Schuck	Leak	Service line	20200	9,350	33.58		
4/25/2023	Credence Hanson	Leak	Toilet Leak	9700	2,000	7.69	2,000	30.38
4/25/2023	Credence Hanson	Leak	Toilet Leak	8500	1,400	5.38	1,400	21.27
4/25/2023	Virginia Ogle	Leak	Toilet Leak	5000	1,066	4.10	1,066	16.20
4/25/2023	Virginia Ogle	Leak	Toilet Leak	4500	816	3.14	816	12.40
4/26/2023	Charles & Wilma Kincade	Leak	Line under house	20700	9,133	32.80	18,267	204.04
4/26/2023	Child Life Academy	Leak	Toilet Leak	11940	2,545	10.58	2,545	38.66
4/26/2023	Spencer & Tashiana Conklin	Leak	Toilet Leak	7060	1,483	5.70	1,483	22.53
4/26/2023	Lace & Nathan Smith-Bright	Overread	Overread	6510	3,531	13.57	3,531	53.64
4/26/2023	Makennon & Jennifer Reynolds	Leak	Water Softner Issues	19900	7,316	28.12	7,316	111.14

4/26/2023	Ike Lightner	Leak	Line under building	58050	28,275	101.54	56,550	631.66
5/5/2023	Debra Ratliff	Leak	Toilet Leak	8040	3,270	12.57	3,270	49.67
5/5/2023	Elizabeth/Kevin Gaines	Leak	Toilet Leak	18900	6,816	26.20	6,816	103.54
5/5/2023	Ron & Lori Partain	Leak	Toilet Leak	10900	2,566	9.87	2,566	38.99
5/5/2023	Justin & Mary Wilson	Leak	Service line	178000	85,750	329.57	171,500	2,605.09
5/5/2023	James Lewis	Leak	City Side Leak	4630	3,130	11.24	3,130	34.96
5/5/2023	Jerry Arnold	Leak	Line under house	18800	6,933	24.90		
5/15/2023	Stacey Pfeifer	Leak	Toilet Leak	5900	1,616	6.21	1,616	24.55
5/15/2023	Stacey Pfeifer	Leak	Toilet Leak	4600	966	3.71	966	14.68
5/15/2023	Quinn & Kassadee Appletoft	Leak	Water Heater Leak	3490	546	2.10	546	8.30
5/15/2023	Amber Taylor	Leak	Toilet Leak	16934	5,602	21.54	5,602	85.10
5/23/2023	Jeffery & Laura Cole	Leak	Service Line	24220	10,360	39.82	2,700	41.01
5/23/2023	Jeffery & Laura Cole	Leak	Service line	10930	3,715	14.27	7,430	112.86
5/24/2023	Joseph Kurban & Melissa Ellis	Leak	Line under house	6350	575	2.21	1,150	17.47
5/24/2023	Joseph Kurban & Melissa Ellis	Leak	Line under house	14740	4,770	18.33	9,540	144.91
5/24/2023	Marilyn Burleson	Leak	Water Heater Leak	7700	2,150	8.26	2,150	32.66
5/24/2023	Marilyn Burleson	Leak	Water Heater Leak	4400	500	1.93	500	7.60
5/24/2023	Mary Pratt	Leak	Line under house	44190	21,345	82.03	7,900	120.00
5/24/2023	Mary Pratt	Leak	Line under house	22860	10,680	41.05	21,360	324.46
5/24/2023	Jamie L Bishop	Leak	Line under house	4540	1,320	5.07	2,640	40.10
5/25/2023	Lance Wolfinbarger	Leak	Service line	5500	1,950	7.50	3,900	59.24
5/25/2023	Jeremy Mathis	Leak	Service line	33180	14,240	54.72	28,480	432.61
5/25/2023	Jeremy Mathis	Leak	Service line	42910	19,105	73.43	14,400	218.74
5/26/2023	Ike Lightner	Leak	Line under building	65300	31,900	132.60	63,800	969.12
6/8/2023	Justin & Mary Wilson	Leak	Service line	75580	34,540	132.75	69,080	1,049.33
6/8/2023	Matthew Cullum	Leak	Service line	52600	24,050	92.43	48,100	730.64
6/14/2023	Sharon Warner	Leak	Service line	93460	44,980	172.87		
6/22/2023	Zoa Oliver	Leak	Service line	9600	4,050	15.57	8,100	123.04
6/23/2023	Raptor Real Estate	Leak	Busted pipe	86500	42,500	152.62	85,000	949.45
6/23/2023	Mario Arias	Leak	Service line	17960	6,205	23.85	12,410	188.51
6/27/2023	Edward & Alicia Baugh	Leak	Toilet Leak	31280	14,155	54.40	14,155	215.01
6/27/2023	Edward & Alicia Baugh	Leak	Toilet Leak	14310	5,670	21.79	5,670	86.13
7/11/2023	Mario Arias	Leak	Service line	15810	5,130	19.72	10,260	155.85
7/12/2023	Andrew Kelly	Leak	Service line	31940	14,825	56.97	29,650	450.38
7/13/2023	William Seabrooks	Leak	Service line	48180	21,148	81.29	42,297	642.49

7/13/2023	Larry Ladd	Leak	Service line	40700	19,600	75.33	39,200	595.45
7/19/2023	Todd & Cassandra Madsen	Leak	Outside spigot	13600	3,800	14.61	7,600	115.44
7/19/2023	Todd & Cassandra Madsen	Leak	Outside spigot	20800	7,400	28.44	6,800	103.29
7/25/2023	Lyndell & Nancy Groves	Leak	Toilet Leak	4800	1,650	5.92	1,650	18.43
7/25/2023	Lyndell & Nancy Groves	Leak	Toilet Leak	3000	750	2.89	750	11.39
8/7/2023	William Seabrooks	Leak	Service line	103640	48,878	187.86	97,757	1,484.93
8/9/2023	Zoa Oliver	Leak	Service line	11500	5,000	19.22	7,100	107.85
8/9/2023	Brent & Bonnie Johnson	Leak	Service line	40270	18,235	70.09		
8/9/2023	Brent & Bonnie Johnson	Leak	Service line	7150	1,675	6.44	3,350	50.89
8/9/2023	Judy & Eddy Martin	Leak	Irrigation Line	26510	11,655	44.80		

AGENDA ITEM ANALYSIS

Project/Issue Name:	23-R-54 A Resolution of the City Council Authorizing the City Administrator to Submit a Renewal Application for Hall Provider of Bingo Premises.
Submitted By:	Laura Burbridge, City Clerk
Date:	September 19, 2023

Issue Statement

To approve and authorize the renewal application for the Hall Provider of Bingo Premises.

Discussion and/or Analysis

The Gerry Pool Senior Friendship Center plays bingo every Monday at 12:45 p.m. The City of Republic is required to submit the annual renewal application as the Hall Provider to the Missouri Gaming Commission. There is no fee for the application.

Recommended Action

Staff recommends approval.

A RESOLUTION OF THE CITY COUNCIL AUTHORIZING THE CITY ADMINISTRATOR TO SUBMIT A RENEWAL APPLICATION FOR HALL PROVIDER OF BINGO PREMISES

WHEREAS, the City of Republic, Missouri ("City" or "Republic") is a municipal corporation and Charter City located in Greene County, Missouri, being duly organized and existing under the laws of the State of Missouri; and

WHEREAS, the Republic Seniors Friendship Center hosts bingo at the Republic Seniors Friendship Center, located at 210 E. Hines Street in Republic ("Property" and/or "Premises"), open to the public, every Monday at 12:45 p.m.; and

WHEREAS, the Missouri Gaming Commission requires the City, as the owner of the Property, to submit an application annually to allow for bingo to be played on the Premises; and

WHEREAS, members of the City Council are listed as officers for the City, and therefore, are included in the annual application; and

WHEREAS, there is no fee charged for the application.

NOW, THEREFORE, BE IT RESOLVED BY THE CITY COUNCIL OF THE CITY OF REPUBLIC, MISSOURI, AS FOLLOWS:

Section 1. The submitted Annual Renewal Application for Hall Provider of Bingo Premises, attached hereto and labeled "Attachment 1", is approved in all respects.

Section 2. The City Administrator, and/or his designee, on behalf of the City, is authorized to sign and execute the Application for Hall Provider of Bingo Premises and any other required documentation for submission of such Application to the Missouri Gaming Commission.

Section 3. This Resolution shall become effective on and after the date of passage and approval.

PASSED AND APPROVED at a regular meeting of the City Council of the City of Republic, Missouri this ___ day of September 2023.

_____
Matt Russell, Mayor

Attest:

_____
Laura Burbridge, City Clerk

Approved as to Form:

Megan McCullough, City Attorney

Final Passage and Vote:

MISSOURI GAMING COMMISSION
Annual Renewal Application for Hall Provider of Bingo Premises

Application and fee due October 31, 2023

Toll Free: 1-(866) 801-8643 Fax: (573) 526-5374

Instructions: All information must be reviewed for accuracy. Corrections should be made directly on the renewal application. Any misrepresentation or omission can result in the denial, suspension or revocation of your application and/or license. When information is unknown, so indicate. You must make a reasonable inquiry to determine the answers to all questions. Any statement that is not true or not disclosed, which becomes known at any later date, is cause for revocation of the organization's bingo license. Provide missing information as applicable.

H-251 City of Republic

Physical location of Hall:

Address: 210 E Hines St
City State Zip: Republic MO 65738
Hall Phone: (417) 732-7672

Mailing address of Hall:

Contact Name: David Cameron
Address 1: 213 N Main
Address 2:
City State Zip: Republic MO 65738
Email Address:
Contact Phone: (417) 732-7672

FEIN number: **44-6000250**

Business Type: **Government** Seating capacity: **301**

Has any of the information, (ie: Certificate of Incorporation, General Waranty Deed, ect..), submitted with the original Hall Provider Application changed? Yes ☐ No ☐ (If yes, please attach copies of the changes.)

Organization Occasions:

Org License No: **B-2343** Org Name: **Republic Seniors Friendship Center**
Start Time: **12:45 pm**
Occurance: **Every**
Day of Week: **Monday**
Lease Amount: **$0.00**
Auxiliary Play: ☑ Hall Play: ☐

FEES PER BINGO OCCASION : Based on current information, please remit the amount indicated.

Amount Due: 0.00

1 = $100.00 2 = $200.00 3 = $300.00 4 = $400.00 5 or more = $500.00

Individuals listed as officers for your company: Do the titles listed still accurately reflect the office held? Mark through the names of individuals who are no longer in office. Update any information as needed.

Name	DOB	Title
CAMERON, DAVID W	[redacted]	CITY ADMIN
DEICHMAN, JAMES LEO	[redacted]	COUNCIL MEM
FRANKLIN, ERIC MONROE	[redacted]	COUNCIL MEM
GROOMS, MICHEAL SHANE	[redacted]	COUNCIL MEM

MITCHELL, JENNIFER LYNNE	[redacted]	COUNCIL MEM
POOL, GERALDINE	[redacted]	COUNCIL MEM
RUSSELL, MATTHEW ALLEN	[redacted]	MAYOR
UPDIKE, CHRISTOPHER SHAWN	[redacted]	CPUNCIL MEM
WILSON, GARRY E	[redacted]	WARD II

If you wish to request approval for new officers list them in the space below: Include the individual's full name as shown on driver license or state-issued identification, social security number, date of birth, and a clear photocopy of the driver license or state-issued identification. If you have more than 10, please attach a sheet and provide all the pertinent information.

Name (Last, First, Middle)	SSN	Name (Last, First, Middle)	SSN
DOB	Title	DOB	Title

Name (Last, First, Middle)	SSN	Name (Last, First, Middle)	SSN
DOB	Title	DOB	Title

Name (Last, First, Middle)	SSN	Name (Last, First, Middle)	SSN
DOB	Title	DOB	Title

Name (Last, First, Middle)	SSN	Name (Last, First, Middle)	SSN
DOB	Title	DOB	Title

Name (Last, First, Middle)	SSN	Name (Last, First, Middle)	SSN
DOB	Title	DOB	Title

This application must be returned to the Missouri Gaming Commission on or before October 31, 2023 along with the application fee. Pursuant to Section 313.052 and Regulation 11 CSR 45-30.535, failure to submit the renewal application by this date will result in a penalty, in the amount of $5.00 per day for each day the application is late. The United States Postal Service Postmark determines date received. **Please make the penalty check payable to the treasurer of the County where your organization is located and forward it to the Charitable Games Division.**

The company/organization acknowledges that any license granted by the Commission is subject to the provisions of Chapter 313 RSMo and the Regulations promulgated thereunder. Failure to comply thereto will subject its license to suspension or revocation. Further, the company/organization agrees to allow inspections by the Commission made in accordance with the above and authorizes the Commission or its agents to examine and secure copies of any records or documents in connection with any bingo games.

Under penalties of perjury, I declare that I have examined this application, and to the best of my knowledge and belief, it is correct and complete. I will comply with all of the provisions of Chapter 313 and the regulations adopted thereunder.

Print Name of authorized representative	Signature of authorized representative	Date

Mail Application and Supporting Documents to

Missouri Gaming Commission
Charitable Games Division
PO Box 1847
3417 Knipp Drive
Jefferson City, MO 65102

AGENDA ITEM ANALYSIS

Project/Issue Name:	23-30 An Ordinance of the City Council Approving Amendment of the Zoning Classification of Approximately Ten Point Four-Four (10.44) Acres, Located at 688 South Kansas Avenue, from Agricultural (AG) and Medium Density Single-Family (R1-M) to Two-Family Residential (R-2).
Submitted By:	Chris Tabor, Principal Planner
Date:	August 29, 2023

Issue Statement

James Nathan LLC has applied to change the Zoning Classification of approximately **10.44 acres** of property located at 688 S. Kansas Ave. from Agricultural (AG) and Medium Density Single-Family (R1-M) to **Two-Family Residential (R-2).**

Discussion and/or Analysis

The property subject to this Rezoning Application consists of approximately 10.44 acres of land located at 688 South Kansas Avenue; the property is occupied by a vacant house in poor condition resulting from a fire. The requested zoning district is Two-Family Residential (R-2).

The following paragraphs contain brief analyses of present site conditions and the proposal's relationship to **adopted plans of the City.** Evaluation for the purpose of staff recommendation is conducted with the assumption of the most intense buildout for the property to provide for the most responsible analyses.

Consistency with the Comprehensive Plan

The City's Comprehensive Plan generally encourages the expansion of residential and commercial development through proactive Rezoning of land at appropriate locations. Appropriate locations are described generally throughout the Plan, with regard to the **relationship of land at particular locations to infrastructure capable of supporting various intensities and densities of uses.**

- **Goal:** Support market conditions to develop a greater variety of residential and commercial options.
  - **Objective:** Support a variety of housing developments and styles to ensure a range of options are available.
- **Goal:** Support new development that is well-connected to the existing community.
  - **Objective:** Encourage development that improves and expands upon existing infrastructure.
  - **Objective:** Promote development aligning with current adopted plans of the City.
- **Goal:** Recognize potential infill sites as opportunities for development, while mitigating impacts to adjacent, established properties.

- **Objective:** Support the development of vacant parcels as opportunities for densification that is harmonious with surrounding development.

The Rezoning of this parcel is consistent with City's Adopted Plans.

The general trend in the vicinity of the subject property is single-family residential.

Compatibility with Surrounding Land Uses

The Applicant is seeking to rezone to the Two-Family Residential (R-2) Zoning District.

The subject property is surrounded by:

- North: Medium Density Single-Family (R1-M)
- East: Medium Density Single-Family (R1-M)
- South: Agricultural (AG)
- West: Agriculture (Greene County)

Land uses permitted in the Two-Family Residential (R-2) Zoning District include duplex-style dwellings and single-family residences.

The land use of the surrounding properties is single-family residential. The Two-Family Residential (R-2) zoning district has a density ratio of 4.36 lots per acre or 8.71 dwellings units per acre.

The density ratios for the current zoning districts, Agricultural (AG) and Medium Density Single-Family Residential (R1-M), are 0.33 lots (or dwellings) per acre and 4.84 lots (or dwellings) per acre, respectively.

Two-Family Residential zoning is considered compatible with single-family uses and can be found in numerous areas across the City.

Capacity to Serve Potential Development and Land Use

Municipal Water and Sewer Service:

Development of the property will require connecting to existing municipal water and sewer mains located onsite.

Two 6" water mains are accessible to the subject property. One at the south termination of S Angel Ave and another at the east termination of W Audrey St.

Two 8" gravity sewer mains are located at the edge of the subject property. One at the south termination of S Angel Ave and another at the east termination of W Audrey St. Effluent from the subject property would flow to the Lift Station #2, before being pumped to the Treatment Facility.

The water system, named Lift Station, and Wastewater Treatment Facility currently have capacity to serve the intended use.

Transportation:

A Traffic Impact Study (TIS) conducted for a previous Rezoning Application was utilized by the Applicant. This study used estimates for trip generations based on a multi-family use classification and was therefore considered acceptable for the lower trip generation of a two-family use classification.

The TIS specifically addressed a full residential buildout of the requested land use, multi-family, with a connection to the Angelbrook Estates subdivision through Angel Avenue and a connection to the Countryside Terrace subdivision through Lipscomb Drive. The TIS also takes into consideration a new public street connection to be made at Kansas Avenue. No traffic improvements were found to be necessary. If City Staff receives an application for a project utilizing street connections that differ from those used as the basis for the received TIS, then Staff may require an updated TIS.

Development of the property will require adherence to the City's Transportation Plan, Adopted Transportation Map, and improvements required by the TIS for buildout.

Floodplain: The subject parcel **does not** contain any areas of Special Flood Hazard Area (Floodplain).

Sinkholes: The subject property **does not** contain any identified sinkholes.

Recommended Action

Staff considers the **proposed Zoning Map Amendment (Rezoning)** to be generally consistent with the **goals and objectives of the Comprehensive Plan, compatible with surrounding land uses,** and **able to be adequately served by municipal facilities.** Based upon this analysis (performed without the benefit of evidence and testimony of a public hearing), **Staff recommends the approval of this application.**

AN ORDINANCE OF THE CITY COUNCIL APPROVING AMENDMENT OF THE ZONING CLASSIFICATION OF APPROXIMATELY TEN POINT FOUR-FOUR (10.44) ACRES, LOCATED AT 688 SOUTH KANSAS AVENUE, FROM AGRICULTURAL (AG) AND MEDIUM DENSITY SINGLE-FAMILY (R1-M) TO TWO-FAMILY RESIDENTIAL (R-2)

WHEREAS, the City of Republic, Missouri, ("City" or "Republic") is a municipal corporation and Charter City located in Greene County, Missouri, being duly created, organized, and existing under the laws of the State of Missouri; and

WHEREAS, James Nathan LLC ("Applicant") submitted an application ("Application") to the City's BUILDS Department for an amendment to the Zoning Code and Official Zoning Map to rezone certain real property consisting of approximately 10.44 acres, located at 688 South Kansas Avenue ("the Property"), from Agricultural (AG) and Medium Density Single-Family (R1-M) to Two-Family Residential (R-2); and

WHEREAS, the City submitted the Application to the Planning and Zoning Commission ("Commission") and set a public hearing before the Commission for August 14, 2023; and

WHEREAS, the City published notice of the time and date of the public hearing at least fifteen (15) days in advance, on July 26, 2023, in the *Greene County Commonwealth*, a newspaper of general circulation in the City; and

WHEREAS, the City gave notice of the Application and public hearing to the record owners of all real properties within 185 feet of the Property; and

WHEREAS, the Commission conducted the public hearing on August 14, 2023, at which all interested persons and entities were afforded the opportunity to present evidence or statement, and after which the Commission rendered written findings of fact and submitted those along with its recommendations to the Council; and

WHEREAS, the Commission, by a vote of 4 Ayes to 2 Nays, recommended the approval of the Application; and

WHEREAS, the Application was submitted to the Council for first read at its regular meeting on August 15, 2023, and submitted for second read at its regular meeting on August 22, 2023, after which the Council voted to approve the Application and amend the Zoning Code accordingly.

NOW, THEREFORE, BE IT ORDAINED BY THE CITY COUNCIL OF THE CITY OF REPUBLIC, MISSOURI, AS FOLLOWS:

Section 1: The Zoning Code and Official Zoning Map are hereby amended to reflect the rezoning of the real property consisting of approximately 10.44 acres, located at 688 South Kansas Avenue, more fully described in the legal description herein below, from Agricultural (AG) and Medium Density Single-Family (R1-M) to Two-Family Residential (R-2):

A TRACT OF LAND LOCATED IN THE NORTH ONE-HALF (N1/2) OF GOVT. LOT 2 OF THE NORTHWEST FRACTIONAL QUARTER (NW.FR. 1/4) OF SECTION 30, TOWNSHIP-28-NORTH (T-28-N), RANGE-23-WEST (R-

23-W) OF THE FIFTH PRINCIPAL MERIDIAN, COMPRISING OF ALL THE NORTH 5 ACRES OF THE SOUTH 12 ACRES OF THE WEST 25 ACRES OF SAID N1/2 - L2 - NW.FR.1/4 OF SECTION 30 AND ALL OF LOT 2 AND LOT 3 OF "830 WEST" (A SUBDIVISION FOUND IN THE GREENE COUNTY, MISSOURI RECORDER'S OFFICE IN PLAT BOOK AAA, PAGE 665) MORE PARTICULARLY DESCRIBED AS FOLLOWS:

COMMENCING AT AN EXISTING IRON PIN CAPPED "LS-2006" MARKING THE NORTHWEST CORNER OF SAID SECTION 30; THENCE S.02°02’10"W., ALONG THE WEST LINE OF THE NORTH ONE-HALF (N1/2) OF LOT 2, OF THE NORTHWEST FRACTIONAL QUARTER (NW FR1/4) OF SAID SECTION 30, A DISTANCE OF 714.69 FEET FOR THE POINT OF BEGINNING:

THENCE S.87°13'41"E., AND ALONG THE SOUTH LINE OF ANGELBROOK ESTATES (A SUBDIVISION FOUND IN GREENE COUNTY, MISSOURI RECORDER'S OFFICE IN PLAT BOOK ZZ, AT PAGE 299), A DISTANCE OF 845.03 FEET TO AN EXISTING 1/2" IRON PIN SET BY LS-1872; THENCE N.02°03'17"E., ALONG THE EAST LINE OF SAID SUBDIVISION, A DISTANCE OF 487.70 FEET TO AN EXISTING IRON PIN SET AND CAPPED "PLS-2260" AT THE NORTHWEST CORNER OF LOT 2 OF SAID 830 WEST S/D; THENCE S.87°40'40"E., ALONG NORTH LOT LINE, A DISTANCE OF 215.79 FEET TO AN EXISTING IRON PIN SET AND CAPPED "PLS-2260" AT THE NORTHEAST CORNER OF SAID LOT; THENCE S.02°01'58"W., ALONG THE EAST LINE OF SAID "830 WEST" S/D, A DISTANCE OF 1083.95 FEET TO AN EXISTING ALUM MONUMENT; THENCE S.49°16'56”W. ALONG THE NORTHWESTERLY RIGHT-OF-WAY LINE OF THE RAILROAD, A DISTANCE OF 27.50 FEET TO AN IRON PIN SET AND CAPPED "PLS-2260" BEING ON THE SOUTH LINE OF SAID N1/2-L2-NW.FR.1/4; THENCE N.87°39'48"W., A DISTANCE OF 196.31 FEET TO AN EXISTING 5/8" IRON PIN; THENCE N.02°07'46"E., A DISTANCE OF 358.67 FEET TO AN EXISTING 1/2" IRON PIN ALSO SET BY LS-1872; THENCE N.87°17'03"W., A DISTANCE OF 845.12 FEET TO A POINT ON THE SAID WEST LINE OF THE NW. FR1/ 4; THENCE N.02°02’10"E., ALONG SAID WEST LINE, A DISTANCE OF 257.13 FEET TO THE POINT OF BEGINNING.

ALL BEING IN GREENE COUNTY, MISSOURI AND CONTAINING 10.44 ACRES, MORE OR LESS. SUBJECT TO EASEMENTS, COVENANTS, AND RIGHTS-OF-WAY OF RECORD, IF ANY.

Section 2: In all other aspects other than those herein amended, modified, or changed, the Zoning Code and Official Zoning Map shall remain the same and continue in full force and effect.

Section 3: The WHEREAS clauses above are specifically incorporated herein by reference.

Section 4: This Ordinance shall take effect and be in force from and after its passage as provided by law.

PASSED AND APPROVED at a regular meeting of the City Council of the City of Republic, Missouri, this _____ day of _____, 2023.

_____

Attest: Matt Russell, Mayor

_____

Laura Burbridge, City Clerk

Approved as to Form:

DocuSigned by:
Damon Phillips
11F90D87116B4F4...
7/28/2023

Megan McCullough, City Attorney

Final Passage and Vote:

REPUBLIC
MISSOURI

OWNER
JAMESNATHAN LLC

ADDRESS
688 S Kansas

PIN
881730200147

ZONING
AG, R1-M || REQUESTED: R-2

WARD
4

ACREAGE
10.44



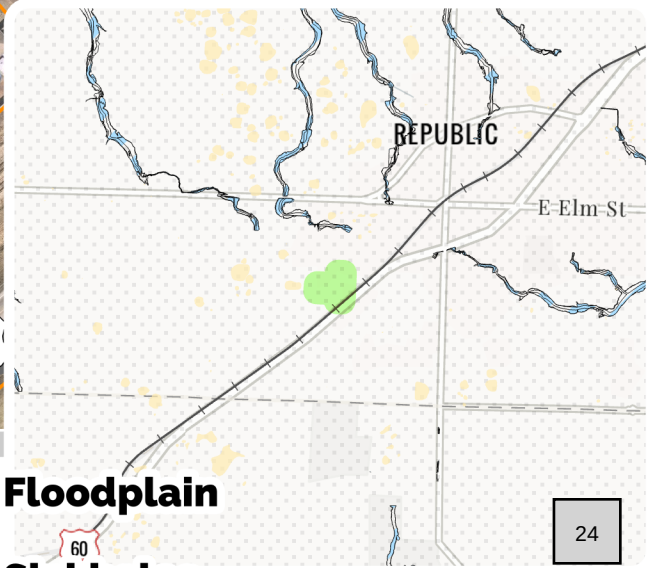

REZN 23-005

Site Extent
Out of City
Floodplain
Sinkholes



OWNER
JAMESNATHAN LLC

ADDRESS
688 S Kansas

PIN
881730200147

ZONING
AG, R1-M || REQUESTED: R-2

WARD
4

ACREAGE
10.44



REZN 23-005

Site Extent
Out of City
Floodplain
Sinkholes

Findings of Fact

REPUBLIC MISSOURI
GROWING TOGETHER

Date of Hearing: 08/14/2023

Time: 6:00

Type of Application: Rezone

Name of Applicant: 688 S. Kansas Ave (REZN 23-005)

Location: City Council Chambers

Based upon the facts presented during the course of this hearing, I have found that the application is generally:

Conforming to the City's adopted Land Use Plan	✓ Yes	○ No
Conforming to the City's adopted Transportation Plan	✓ Yes	○ No
Conforming to other adopted plans of the City (i.e. water, wastewater, parks, etc.)	✓ Yes	○ No
Compatible with surrounding land uses	✓ Yes	○ No
Able to be adequately served by municipal infrastructure	✓ Yes	○ No
Aligned with the purposes of RSMo. 89.040	✓ Yes	○ No

Statement of Relevant Facts Found:

Based on these findings, I have concluded to recommend the application to the City Council for: ○ Approval ✓ Denial

Commissioner Name: [illegible]

Commissioner Signature: [signature]

Date: 8/14/23

Findings of Fact

REPUBLIC
MISSOURI
GROWING TOGETHER

Date of Hearing:	Time:	Type of Application:
08/14/2023	6:00	Rezone

Name of Applicant:	Location:
688 S. Kansas Ave (REZN 23-005)	City Council Chambers

Based upon the facts presented during the course of this hearing, I have found that the application is generally:

Conforming to the City's adopted Land Use Plan	(✓) Yes	( ) No
Conforming to the City's adopted Transportation Plan	(✓) Yes	( ) No
Conforming to other adopted plans of the City (i.e. water, wastewater, parks, etc.)	(✓) Yes	( ) No
Compatible with surrounding land uses	( ) Yes	(✓) No
Able to be adequately served by municipal infrastructure	(✓) Yes	( ) No
Aligned with the purposes of RSMo. 89.040	( ) Yes	(✓) No

Statement of Relevant Facts Found:

10.44 acres of AG and R1-M to R-2 8.71 units/per acre vs 4 8/4
surrounded by R1-M established neighborhoods
Require to build to water + sewer mains that have capacity and are adjacent to property
TIS done for R-3
Proposing 22 Buildings or 44 units ≈ 4.21 units/acre - close to R1-M

Based on these findings, I have concluded to recommend the application to the City Council for: ( ) Approval (✓) Denial

Commissioner Name:	Commissioner Signature:	Date:
Brian Dobbraw		8-14-23

Findings of Fact

REPUBLIC MISSOURI
GROWING TOGETHER

Date of Hearing: 08/14/2023

Time: 6:00

Type of Application: Rezone

Name of Applicant: 688 S. Kansas Ave (REZN 23-005)

Location: City Council Chambers

Based upon the facts presented during the course of this hearing, I have found that the application is generally:

Conforming to the City's adopted Land Use Plan	◉ Yes	○ No
Conforming to the City's adopted Transportation Plan	◉ Yes	○ No
Conforming to other adopted plans of the City (i.e. water, wastewater, parks, etc.)	◉ Yes	○ No
Compatible with surrounding land uses	◉ Yes	○ No
Able to be adequately served by municipal infrastructure	◉ Yes	○ No
Aligned with the purposes of RSMo. 89.040	◉ Yes	○ No

Statement of Relevant Facts Found:

Opposed ~~THIS~~ 11
- depreciation of value of single family homes. explained.
- Complaints of too much traffic & Traffic Study Not done, relying on one a year old that does not reflect developments since.
- trains holding traffic?
- Storm water runoff.

Based on these findings, I have concluded to recommend the application to the City Council for: ◉ Approval ○ Denial

Commissioner Name: CYNTHIA HYDER

Commissioner Signature: C Hyder

Date: 8/14/2023

Findings of Fact

REPUBLIC MISSOURI
GROWING TOGETHER

Date of Hearing: 08/14/2023

Time: 6:00

Type of Application: Rezone

Name of Applicant: 688 S. Kansas Ave (REZN 23-005)

Location: City Council Chambers

Based upon the facts presented during the course of this hearing, I have found that the application is generally:

Conforming to the City's adopted Land Use Plan	☑ Yes	○ No
Conforming to the City's adopted Transportation Plan	☑ Yes	○ No
Conforming to other adopted plans of the City (i.e. water, wastewater, parks, etc.)	☑ Yes	○ No
Compatible with surrounding land uses	☑ Yes	○ No
Able to be adequately served by municipal infrastructure	☑ Yes	○ No
Aligned with the purposes of RSMo. 89.040	☑ Yes	○ No

Statement of Relevant Facts Found:

Size of proposed duplexes are approximately the same as the homes in the adjoining R-1.
Traffic has expanded based on finalization of R-1 properties
Water does not move from the proposed R-2 property onto the adjoining R-1 properties

Based on these findings, I have concluded to recommend the application to the City Council for: ☑ Approval ○ Denial

Commissioner Name: Ransom Ellis, III

Commissioner Signature: Ransom Ellis, III

Date: 8/14/23

Findings of Fact

REPUBLIC
MISSOURI
GROWING TOGETHER

Date of Hearing:	Time:	Type of Application:
08/14/2023	6:00	Rezone

Name of Applicant:	Location:
688 S. Kansas Ave (REZN 23-005)	City Council Chambers

Based upon the facts presented during the course of this hearing, I have found that the application is generally:

Conforming to the City's adopted Land Use Plan	☒ Yes	○ No
Conforming to the City's adopted Transportation Plan	☒ Yes	○ No
Conforming to other adopted plans of the City (i.e. water, wastewater, parks, etc.)	☒ Yes	○ No
Compatible with surrounding land uses	☒ Yes	○ No
Able to be adequately served by municipal infrastructure	☒ Yes	○ No
Aligned with the purposes of RSMo. 89.040	☒ Yes	○ No

Statement of Relevant Facts Found:

- falls in line with planning & zoning of the City.
- Meets all requirements of R-2
-

Based on these findings, I have concluded to recommend the application to the City Council for: ☒ Approval ○ Denial

Commissioner Name:	Commissioner Signature:	Date:
Mitchell Mann	Mitchell Mann	8/14/23

Findings of Fact

REPUBLIC MISSOURI
GROWING TOGETHER

Date of Hearing:	Time:	Type of Application:
08/14/2023	6:00	Rezone

Name of Applicant:	Location:
688 S. Kansas Ave (REZN 23-005)	City Council Chambers

Based upon the facts presented during the course of this hearing, I have found that the application is generally:

Conforming to the City's adopted Land Use Plan	☒ Yes	○ No
Conforming to the City's adopted Transportation Plan	☒ Yes	○ No
Conforming to other adopted plans of the City (i.e. water, wastewater, parks, etc.)	☒ Yes	○ No
Compatible with surrounding land uses	☒ Yes	○ No
Able to be adequately served by municipal infrastructure	☒ Yes	○ No
Aligned with the purposes of RSMo. 89.040	☒ Yes	○ No

Statement of Relevant Facts Found:

Based on these findings, I have concluded to recommend the application to the City Council for: ☒ Approval ○ Denial

Commissioner Name:	Commissioner Signature:	Date:
Darran Campbell	[signature]	8-14-23

AGENDA ITEM ANALYSIS

Project/Issue Name:	23-35 An Ordinance of the City Council Approving a Special Use Permit for Melanie Fergason to Operate Republic Animal Hospital on Real Property Located at 542, 546, 550, and 554 East Harrison Street.
Submitted By:	Patrick Ruiz, BUILDS Department Associate Planner
Date:	September 19th, 2023

Issue Statement

Melanie Fergason has applied for a Special Use Permit to operate a Veterinary facility or similar establishment on the property located at 542, 546, 550, and 554 East Harrison Street.

Discussion and Analysis

The subject property of this application is comprised of one lot approximately one point seven-four (1.74) acres of land and is zoned General Commercial (C-2). The lot currently has an existing commercial building with multiple units. The applicant is requesting a Special Use Permit to allow for the redevelopment and operation of a Veterinary facility that will be comprised of four units of an existing commercial building. If approved, it would allow the applicant to remodel the four western-most units of the commercial building into a Veterinary facility.

The property is surrounded by:

- General Commercial (C-2) to the East and West;
- General Commercial (C-2) and Local Commercial (C-1) to the South;
- General Commercial (C-2), Medium Density Single-Family Residential (R1-M), and Light Industrial (M-1) to the north across E Harrison St.

Applicant's Special Use Permit Request

The Applicant is requesting a Special Use Permit to allow for the redevelopment and operation of a Veterinary facility that will be comprised of four units of an existing commercial building. The applicant is proposing an expansion of an existing business, Republic Animal Hospital, currently located at the same building in unit 574. This Application, were it to be approved, would allow for a future Commercial Remodel Building Permit application in line with the proposed narrative plan for redevelopment.

Compatibility with City's Special Use Ordinance

The City's Special Use Permit Ordinance, Section 405.670, authorizes, upon approval of the City Council,

uses which are otherwise prohibited by the subject zoning district provided appropriate conditions and safeguards which may be imposed to protect the public welfare and to conserve and protect the condition and value of property in the neighborhood. Special Use Permits are required by Section 405.670 for Veterinary Facilities or similar establishments.

In addition, the operator of the site will be required to have a valid business license on file with the City prior to conducting business.

Municipal Water and Sewer Service: This site is currently served by the City of Republic water and sanitary sewer services. The approval of a Special Use Permit for a Veterinary Facility or Similar Establishment would not require new connections to the existing water and sewer service lines.

Duration: This Special Use Permit, if approved, would remain valid until a change in use or in the configuration of the use occurred. Changes in use or significant reconfiguration would void the Special Use Permit. Furthermore, the Applicant is required to abide by any additional conditions that may be placed on the permit at City Council's request. Design review of the remodel of the existing building would occur during the review phase of the building permit application process.

Transportation: A Traffic Impact Study (TIS) was not required due as no impactful change in trips generated is anticipated.

Floodplain: The subject parcel **does not** contain a **Special Flood Hazard Area (SFHA/Floodplain).**

Sinkholes: The subject parcel **does not** contain any **sinkholes.**

STAFF RECOMMENDATION

Staff considers the **proposed Special Use Permit** request for a Veterinary Facility or similar establishment in a General Commercial (C-2) Zoning District, located at 542, 546, 550, and 554 East Harrison Street, to be **generally consistent with the City's Special Use Permit Ordinance** and **able to be adequately served by the City's transportation network and the City's municipal facilities**. Based upon this analysis (performed without the benefit of evidence and testimony of a public hearing), Staff recommends the approval of this application.

Redevelopment of the subject units on this parcel will require adherence to the City's adopted Plans and Ordinances; the next step in the process to redevelop the subject units of the existing building, upon a favorable Special Use Permit outcome, will be the construction, review, and approval of a Commercial Remodel Permit.

AN ORDINANCE OF THE CITY COUNCIL APPROVING A SPECIAL USE PERMIT FOR MELANIE FERGASON TO OPERATE REPUBLIC ANIMAL HOSPITAL ON REAL PROPERTY LOCATED AT 542, 546, 550, AND 554 EAST HARRISON STREET

WHEREAS, the City of Republic, Missouri, ("City" or "Republic") is a municipal corporation and Charter City located in Greene County, Missouri, being duly created, organized, and existing under the laws of the State of Missouri; and

WHEREAS, Melanie Fergason ("Applicant") submitted an application for a Special Use Permit ("Application") that would allow Applicant to operate a veterinary facility on real property located at 542, 546, 550, and 554 East Harrison Street in Republic, Missouri (collectively, "the Property"); and

WHEREAS, under Republic Code Section 405.670, the City Council may authorize certain land uses on real property that are otherwise prohibited under Republic Code, subject to conditions and/or safeguards designed to protect the public welfare and to conserve and protect the condition and value of property in the surrounding area, as deemed necessary and/or appropriate by the Council; and

WHEREAS, under Section 405.670, a special use permit is required for any individual or entity to operate a veterinary facility in the City of Republic; and

WHEREAS, the City submitted the Application to the Planning and Zoning Commission ("Commission") and set a public hearing before the Commission for September 11, 2023; and

WHEREAS, notice of the time and date of the public hearing before the Commission was published at least fifteen (15) days in advance thereof, on August 23, 2023, in the *Greene County Commonwealth*, a newspaper of general circulation in the City, and such notice was sent via mail to all property owners within 185 feet of the Property; and

WHEREAS, the Commission presided over the public hearing on the Application on September 11, 2023, as scheduled, at which all interested persons and entities were afforded the opportunity to present evidence or statement, and after which the Commission rendered written findings of fact and submitted those along with its recommendations to the Council; and

WHEREAS, the Commission, by a vote of 5 Ayes to 0 Nays, recommended approval of the Application; and

WHEREAS, the Application was submitted to the Council for first read at its regular meeting on September 19, 2023, and submitted for second read at its regular meeting on October 3, 2023; and

WHEREAS, pursuant to Republic Code Section 405.670, the Council finds the proposed special use will not endanger the public's health or safety, is in conformity with the City's Comprehensive Plan and other adopted plans currently in place and will generally be in harmony with the surrounding uses, and therefore approves the Special Use Permit for Applicant.

NOW, THEREFORE, BE IT ORDAINED BY THE CITY COUNCIL OF THE CITY OF REPUBLIC, MISSOURI, AS FOLLOWS:

Section 1: A Special Use Permit is hereby approved for issuance to Melanie Fergason for the purpose of operating a veterinary facility on real property located at 542, 546, 550, and 554 East Harrison Street in Republic, Missouri, more specifically described as follows:

TRACT II:

COMMENCING AT THE NORTHEAST CORNER OF THE SOUTHEAST QUARTER (SE¼) OF THE SOUTHEAST QUARTER (SE¼) OF THE NORTHWEST QUARTER (NW¼) OF SECTION TWENTY (20), TOWNSHIP TWENTY-EIGHT (28), RANGE TWENTY-THREE (23); THENCE SOUTH 01033'07" WEST, A DISTANCE OF 25.00 FEET TO THE SOUTH RIGHT-OF-WAY LINE OF HARRISON STREET TO AN IRON PIN SET AND THE POINT OF BEGINNING; THENCE NORTH 89°16'14" WEST, ALONG SAID SOUTH RIGHT-OF-WAY LINE, A DISTANCE OF 168.10 FEET TO AN IRON PIN SET; THENCE SOUTH 01°30'12" WEST AND LEAVING SAID RIGHT-OF-WAY, A DISTANCE OF 139.92 FEET TO AN IRON PIN SET; THENCE SOUTH 89°13'43" EAST, A DISTANCE OF 167.98 FEET TO AN IRON PIN SET; THENCE SOUTH 01°33'07" WEST, A DISTANCE OF 104.52 FEET TO AN IRON PIN SET; THENCE SOUTH 89°21'24" EAST, A DISTANCE OF 215.64 FEET; THENCE NORTH 00°41'39" EAST, A DISTANCE OF 244.34 FEET TO AN IRON PIN SET ON THE AFORESAID SOUTH RIGHT-OF-WAY LINE; THENCE NORTH 89°18'15" WEST ALONG SAID SOUTH RIGHT-OF-WAY LINE, A DISTANCE OF 211.98 FEET TO THE POINT OF BEGINNING, ALL BEING IN THE CITY OF REPUBLIC, GREENE COUNTY, MISSOURI.

Section 2: The following conditions and safeguards are hereby expressly incorporated into the Special Use Permit issued under this Ordinance:

A. The Application.

B. Municipal Water and Sewer Service:

   a. The Property currently has access to City water and sanitary sewer services.

   b. Placement of additional water and sewer infrastructure shall be considered and determined upon review of the Applicant's New Commercial Building Permit application. Applicant shall comply with the determinations made by the City in this regard.

C. Duration:

   a. The Special Use Permit shall remain valid until a change in use or in the configuration of the use occurs, which will void and invalidate the Special Use Permit.

D. Transportation:

   a. The property will be accessed from East Harrison Street.

E. Other Requirements:

   a. Applicant must submit an application for a New Commercial Building Permit demonstrating conformance with all applicable City code and regulations, including, but not limited to, the City's Zoning Regulations, Building Codes and Regulations and Fire Code, and comply with all procedural requirements for obtaining the

appropriate building and other permits required for development of the storage facility.

Section 3: The WHEREAS clauses above are specifically incorporated herein by reference.

Section 4: The provisions of this Ordinance are severable, and if any provision hereof is declared invalid, unconstitutional, or unenforceable, such determination shall not affect the validity of the remainder of this Ordinance.

Section 5: This Ordinance shall take effect and be in force from and after its passage as provided by law.

PASSED AND APPROVED at a regular meeting of the City Council of the City of Republic, Missouri, this _____ day of _____, 2023.

_____
Matt Russell, Mayor

Attest:

_____
Laura Burbridge, City Clerk

Approved as to Form:

_____
Megan McCullough, City Attorney

Final Passage and Vote:



REPUBLIC ANIMAL HOSPITAL

SU 23-002 | SPECIAL USE PERMIT

Owner/Applicant
HICKS TRUST / Melanie Fergason

ADDRESS
542, 546, 550, 554 E Harrison ST

ZONING
C-2 | REQUESTED: N/A

PIN
881720104006

WARD
2

ACREAGE
1.74

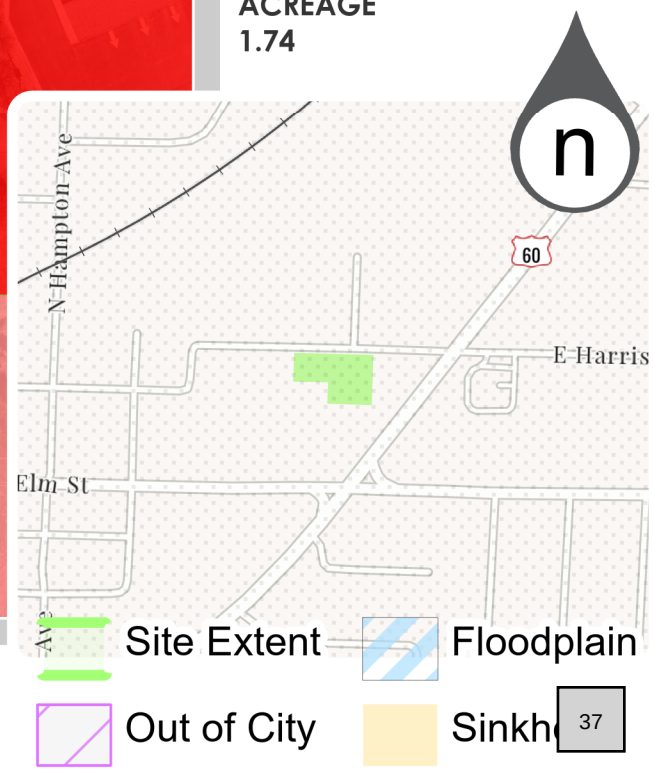



REPUBLIC ANIMAL HOSPITAL

SU 23-002 | SPECIAL USE PERMIT

Owner/Applicant
HICKS TRUST / Melanie Fergason

ADDRESS
542, 546, 550, 554 E Harrison ST

ZONING
C-2 | REQUESTED: N/A

PIN
881720104006

WARD
2

ACREAGE
1.74

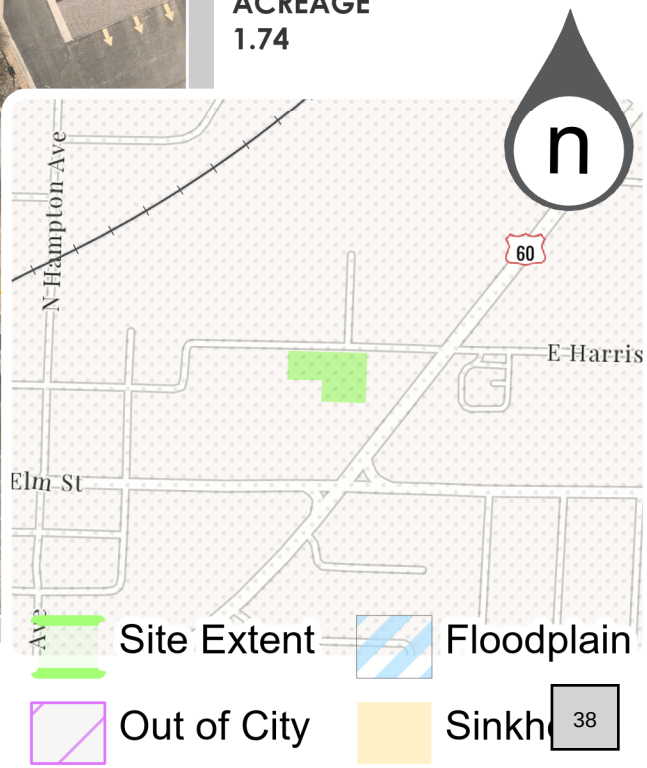

Republic Animal Hospital Narrative Plan

There has been an increased need for veterinary care in our area and the larger hospital size would also allow me to serve more pets and their owners in our local community.

My plan is to relocate and expand Republic Animal Hospital from 574 E Harrison Street to 542-554 E Harrison Street. Republic Animal Hospital would continue to provide veterinary services to small animal patients (dogs and cats). The hospital would provide preventative/wellness care to include vaccines and parasite prevention. The hospital would provide medical and urgent care for sick or injured animals. Surgery and dentistry would also be performed at the clinic.

Patients would not be routinely left overnight at the hospital and no boarding or grooming services are planned to be offered.

Findings of Fact

REPUBLIC MISSOURI
GROWING TOGETHER

Date of Hearing: 09/11/2023

Time: 6:00PM

Type of Application: Special Use Permit

Name of Applicant: Republic Animal Hospital (SU 23-002)

Location: City Council Chambers

Based upon the facts presented during the course of this hearing, I have found that the application is generally:

Conforming to the City's adopted Land Use Plan	◉ Yes	○ No
Conforming to the City's adopted Transportation Plan	◉ Yes	○ No
Conforming to other adopted plans of the City (i.e. water, wastewater, parks, etc.)	◉ Yes	○ No
Compatible with surrounding land uses	◉ Yes	○ No
Able to be adequately served by municipal infrastructure	◉ Yes	○ No
Aligned with the purposes of RSMo. 89.040	◉ Yes	○ No

Statement of Relevant Facts Found:

C-2 for veterinary clinic
4 units of Building adjoining current business
Move from 574 to 542→554
No issues w/ water/Sewer/traffic/floodplain/sinkholes

Based on these findings, I have concluded to recommend the application to the City Council for: ◉ Approval ○ Denial

Commissioner Name: Brian Dawkins

Commissioner Signature: [signature]

Date: 9-11-23

Findings of Fact

REPUBLIC MISSOURI
GROWING TOGETHER

Date of Hearing: 09/11/2023

Time: 6:00PM

Type of Application: Special Use Permit

Name of Applicant: Republic Animal Hospital (SU 23-002)

Location: City Council Chambers

Based upon the facts presented during the course of this hearing, I have found that the application is generally:

Conforming to the City's adopted Land Use Plan	☑ Yes	○ No
Conforming to the City's adopted Transportation Plan	☑ Yes	○ No
Conforming to other adopted plans of the City (i.e. water, wastewater, parks, etc.)	☑ Yes	○ No
Compatible with surrounding land uses	☑ Yes	○ No
Able to be adequately served by municipal infrastructure	☑ Yes	○ No
Aligned with the purposes of RSMo. 89.040	☑ Yes	○ No

Statement of Relevant Facts Found:

Based on these findings, I have concluded to recommend the application to the City Council for: ☑ Approval ○ Denial

Commissioner Name: Jeff Hys

Commissioner Signature:

Date: 9/11/23

Findings of Fact

REPUBLIC MISSOURI
GROWING TOGETHER

Date of Hearing: 09/11/2023

Time: 6:00PM

Type of Application: Special Use Permit

Name of Applicant: Republic Animal Hospital (SU 23-002)

Location: City Council Chambers

Based upon the facts presented during the course of this hearing, I have found that the application is generally:

Conforming to the City's adopted Land Use Plan	☒ Yes	○ No
Conforming to the City's adopted Transportation Plan	☒ Yes	○ No
Conforming to other adopted plans of the City (i.e. water, wastewater, parks, etc.)	☒ Yes	○ No
Compatible with surrounding land uses	☒ Yes	○ No
Able to be adequately served by municipal infrastructure	☒ Yes	○ No
Aligned with the purposes of RSMo. 89.040	☒ Yes	○ No

Statement of Relevant Facts Found:

Applicant present (Vet)

No speakers otherwise.

Based on these findings, I have concluded to recommend the application to the City Council for: ☒ Approval ○ Denial

Commissioner Name: John Alexander

Commissioner Signature:

Date: 9/11/23

Findings of Fact

REPUBLIC MISSOURI
GROWING TOGETHER

Date of Hearing: 09/11/2023

Time: 6:00PM

Type of Application: Special Use Permit

Name of Applicant: Republic Animal Hospital (SU 23-002)

Location: City Council Chambers

Based upon the facts presented during the course of this hearing, I have found that the application is generally:

Conforming to the City's adopted Land Use Plan	◉ Yes	○ No
Conforming to the City's adopted Transportation Plan	◉ Yes	○ No
Conforming to other adopted plans of the City (i.e. water, wastewater, parks, etc.)	◉ Yes	○ No
Compatible with surrounding land uses	◉ Yes	○ No
Able to be adequately served by municipal infrastructure	◉ Yes	○ No
Aligned with the purposes of RSMo. 89.040	◉ Yes	○ No

Statement of Relevant Facts Found:

Based on these findings, I have concluded to recommend the application to the City Council for: ◉ Approval ○ Denial

Commissioner Name: CYNTHIA HYDER

Commissioner Signature: C. Hyder

Date: 9/11/2023

Findings of Fact

REPUBLIC MISSOURI
GROWING TOGETHER

Date of Hearing: 09/11/2023

Time: 6:00PM

Type of Application: Special Use Permit

Name of Applicant: Republic Animal Hospital (SU 23-002)

Location: City Council Chambers

Based upon the facts presented during the course of this hearing, I have found that the application is generally:

Conforming to the City's adopted Land Use Plan	(X) Yes	( ) No
Conforming to the City's adopted Transportation Plan	(X) Yes	( ) No
Conforming to other adopted plans of the City (i.e. water, wastewater, parks, etc.)	(X) Yes	( ) No
Compatible with surrounding land uses	(X) Yes	( ) No
Able to be adequately served by municipal infrastructure	(X) Yes	( ) No
Aligned with the purposes of RSMo. 89.040	(X) Yes	( ) No

Statement of Relevant Facts Found:

Based on these findings, I have concluded to recommend the application to the City Council for: (X) Approval ( ) Denial

Commissioner Name: Darran Campbell

Commissioner Signature:

Date: 9-11-23

AGENDA ITEM ANALYSIS

Project/Issue Name:	23-36 An Ordinance of the City Council Approving Amendment of the Zoning Classification of Approximately Fifteen Acres, Located at 1230 South State Highway MM, from Agricultural (AG) to Heavy Industrial (M-2).
Submitted By:	Patrick Ruiz, BUILDS Department Associate Planner
Date:	September 19, 2023

Issue Statement

KDEB Properties LLC has applied to change the Zoning Classification of approximately 15 acres of property located at 1230 S St Hwy MM from Agricultural (AG) to Heavy Industrial (M-2).

Discussion and Analysis

The property subject to this Rezoning Application consists of approximately 15 acres of land located at 1230 S St Hwy MM; the property is currently the site of an occupied residence.

The following paragraphs contain brief analyses of present site conditions as well as the proposal's relationship to **adopted plans of the City.**

Consistency with the Comprehensive Plan

The City's Comprehensive Plan generally encourages the expansion of residential and commercial development through proactive Rezoning of land at appropriate locations. Appropriate locations are described generally throughout the Plan, with regard to the **relationship of land at particular locations to infrastructure capable of supporting various intensities and densities of uses.**

- **Goal:** Coordinate infrastructure development through the encouragement of redevelopment and integration of the former Brookline area.
    - **Objective:** Support the development of an industrial/commercial center where infrastructure and transportation exist.

The Rezoning of this parcel is consistent with City's Adopted Plans.

The subject property fronts St Hwy MM, which operates as an industrial corridor within the city. The general trend of this area has been a transition from agricultural zoned properties and residential uses to manufacturing and commercial uses in conjunction with planned infrastructure improvements.

Compatibility with Surrounding Land Uses

The subject property is adjacent to Agriculturally (AG) zoned parcels bordering the north, south, and east property lines. A recently rezoned property to the north is zoned Heavy Industrial (M-2). Across St Hwy MM is the Republic Industrial subdivision, a preliminary platted Heavy Industrial (M-2) zoned subdivision consisting of five parcels.

The Heavy Industrial (M-2) Zoning District is intended to support manufacturing and industrial related uses.

Capacity to Serve Potential Development and Land Use

Municipal Water and Sewer Service:

City Water and Sewer systems have capacity to serve this property if the application is approved.

Actual development of the property will require connecting to municipal water and sewer mains not currently located near the property. The provision of sewer service to the property will require the construction of a lift station to serve the basin in which the subject property resides. The precise path effluent would take to the Wastewater Treatment Facility is dependent on the siting of utilities and structures but is likely to flow from the site to Brookline North Lift Station, to Brookline South Lift Station, to Mcelhaney Lift Station and then to the Wastewater Treatment Facility.

The water system, named Lift Stations, and Wastewater Treatment Facility currently have capacity to serve the intended use.

Transportation:

The City waived the requirement for a Traffic Impact Study (TIS) in relation to this Rezone Application based on the presence of existing access from the site to St Hwy MM, a primary arterial class road set for anticipated expansion to 5 lanes in Fall of 2024.

Floodplain: The subject parcel **does not** contain any areas of Special Flood Hazard Area (Floodplain).

Sinkholes: The subject property **does not** contain an identified sinkhole.

STAFF RECOMMENDATION

Staff considers the **proposed Zoning Map Amendment (Rezoning)** to be generally consistent with the **goals and objectives of the Comprehensive Plan**, consistent with the **trend of development in the vicinity of the site, compatible with surrounding land uses,** and **able to be adequately served by municipal facilities.** Based upon this analysis (performed without the benefit of evidence and testimony of a public hearing), **Staff recommends the approval of this application.**

AN ORDINANCE OF THE CITY COUNCIL APPROVING AMENDMENT OF THE ZONING CLASSIFICATION OF APPROXIMATELY 15 ACRES, LOCATED AT 1230 SOUTH STATE HIGHWAY MM, FROM AGRICULTURAL (AG) TO HEAVY INDUSTRIAL (M-2)

WHEREAS, the City of Republic, Missouri, ("City" or "Republic") is a municipal corporation and Charter City located in Greene County, Missouri, being duly created, organized, and existing under the laws of the State of Missouri; and

WHEREAS, KDEB Properties, LLC ("Applicant") submitted an application ("Application") to the City's BUILDS Department for an amendment to the Zoning Code and Official Zoning Map to rezone certain real property consisting of approximately 15 acres, located at 1230 South State Highway MM ("the Property"), from Agricultural (AG) to Heavy Industrial (M-2), and

WHEREAS, the City submitted the Application to the Planning and Zoning Commission ("PZ Commission") and set a public hearing on the application for September 11, 2023; and

WHEREAS, pursuant to Republic Municipal Code § 405.980, the City published notice of the time and date for the public hearing on the application on August 23, 2023, in the *Greene County Commonwealth*, a newspaper of general circulation in the City, such notice being at least fifteen (15) days before the public hearing; and

WHEREAS, pursuant to Republic Municipal Code § 405.980, the City gave notice of the public hearing on the application to the record owners of all properties located within 185 feet of the Property, consistent with the information shown by the Greene County Assessor's Office; and

WHEREAS, the PZ Commission conducted the public hearing on September 11, 2023, at which all interested persons and entities were afforded the opportunity to present evidence or statement, and after which the PZ Commission rendered written findings of fact and submitted those along with its recommendations to the Council; and

WHEREAS, the PZ Commission, by a vote of 5 Ayes to 0 Nays, recommended approval of the Application; and

WHEREAS, the Application was submitted to the City Council for first read at its regular meeting on September 19, 2023, and for second read at its regular meeting on October 3, 2023, after which the Council voted to approve the Application and amend the Zoning Code accordingly.

NOW, THEREFORE, BE IT ORDAINED BY THE CITY COUNCIL OF THE CITY OF REPUBLIC, MISSOURI, AS FOLLOWS:

Section 1: The Zoning Code and Official Zoning Map are hereby amended to reflect the rezoning of the real property consisting of approximately 15 acres, located at 1230 South State Highway MM, more fully described in the legal description herein below, from Agricultural (AG) to Heavy Industrial (M-2):

THE NORTH FIFTEEN (15) ACRES OF THE SOUTHWEST QUARTER (SW ¼) OF THE NORTHWEST QUARTER (NW ¼) OF SECTION TWENTY-SIX (26), TOWNSHIP TWENTY-NINE (29), RANGE TWENTY-THREE (23), IN GREENE COUNTY, MISSOURI.

Section 2: In all other aspects other than those herein amended, modified, or changed, the Zoning Code and Official Zoning Map shall remain the same and continue in full force and effect.

Section 3: The WHEREAS clauses above are specifically incorporated herein by reference.

Section 4: This Ordinance shall take effect and be in force from and after its passage as provided by law.

PASSED AND APPROVED at a regular meeting of the City Council of the City of Republic, Missouri, this _____ day of _____, 2023.

_____

Attest: Matt Russell, Mayor

_____
Laura Burbridge, City Clerk

Approved as to Form:



Megan McCullough, City Attorney

Final Passage and Vote:



HWY MM: M-2 REZONING

REZN 23-006 | REZONE

Owner
KDEB PROPERTIES LLC

ADDRESS
1230 S State Hwy MM

ZONING
AG | REQUESTED: M-2

PIN
881426200016

WARD
2

ACREAGE
15.00

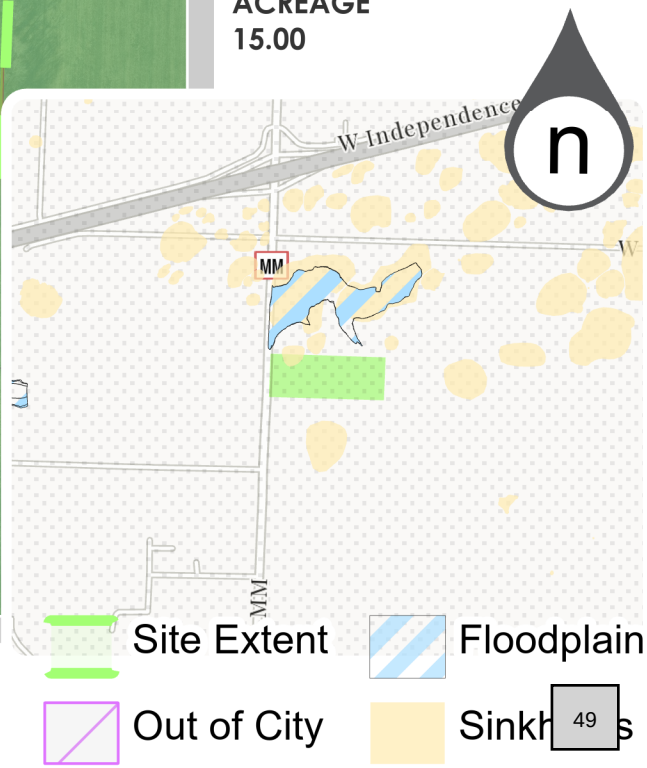

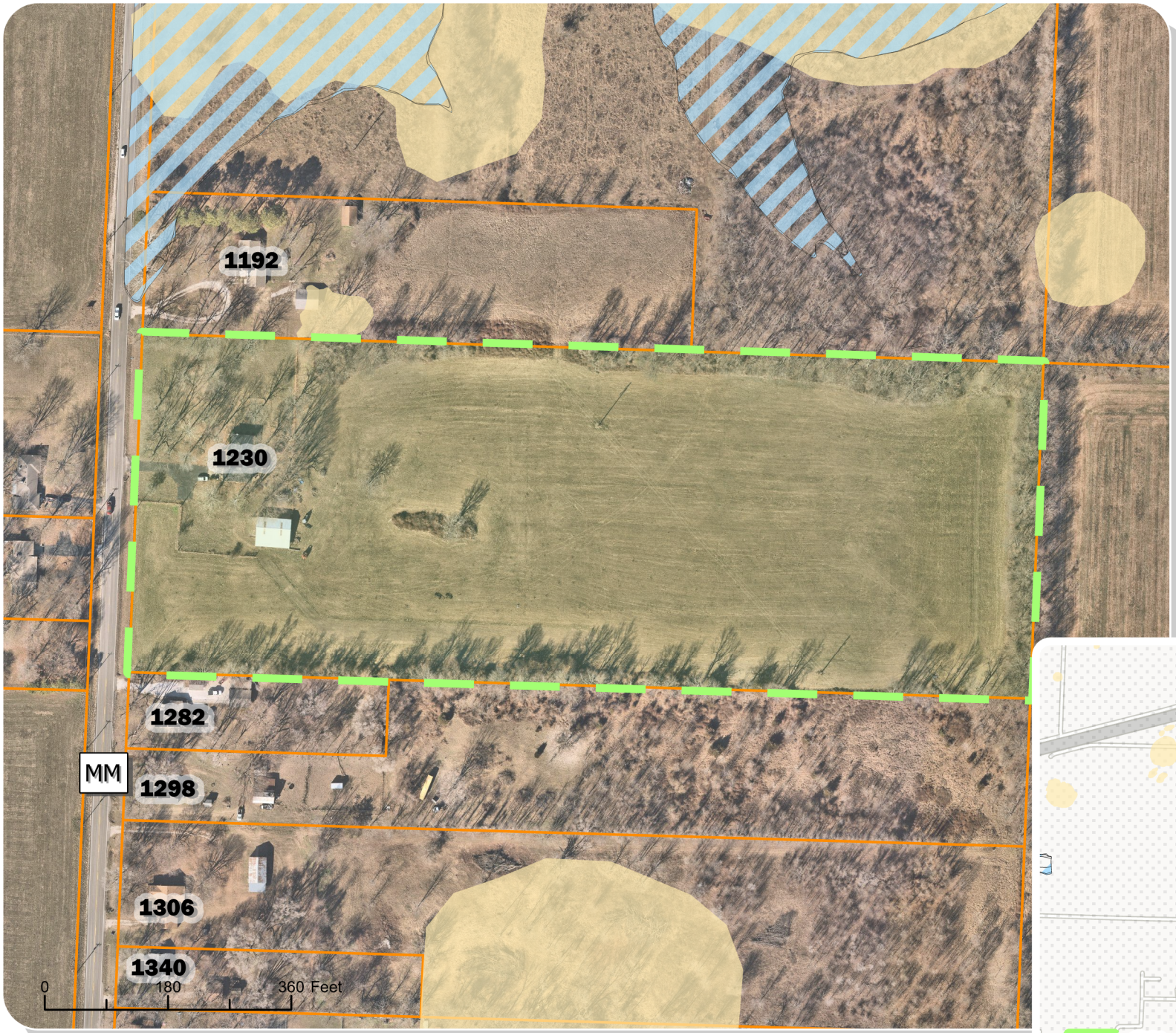

Owner
KDEB PROPERTIES LLC

ADDRESS
1230 S State Hwy MM

ZONING
AG | REQUESTED: M-2

PIN
881426200016

WARD
2

ACREAGE
15.00

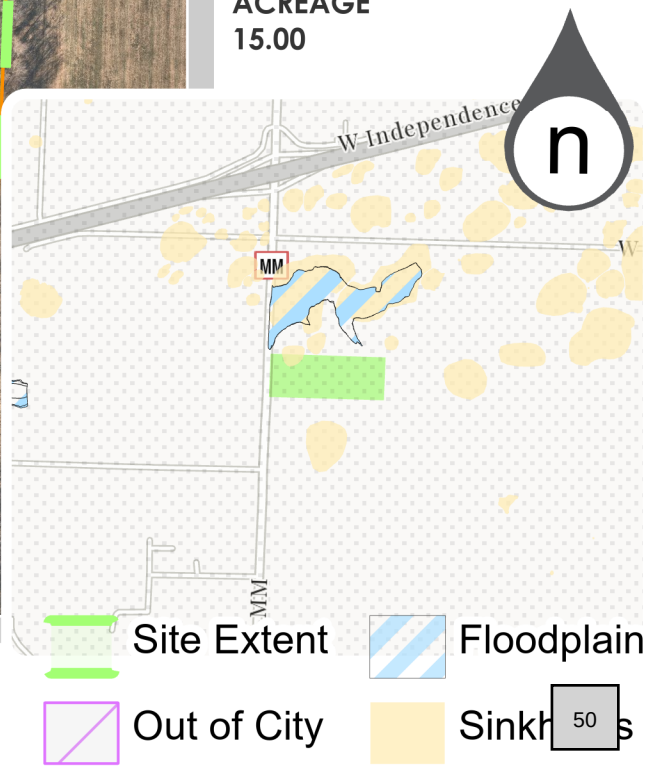

HWY MM: M-2 REZONING

REZN 23-006 | REZONE

Findings of Fact

REPUBLIC MISSOURI
GROWING TOGETHER

Date of Hearing:	Time:	Type of Application:
09/11/2023	6:00	Rezone

Name of Applicant:	Location:
1230 S St Hwy MM (REZN 23-006)	City Council Chambers

Based upon the facts presented during the course of this hearing, I have found that the application is generally:

Conforming to the City's adopted Land Use Plan	✓ Yes	○ No
Conforming to the City's adopted Transportation Plan	✓ Yes	○ No
Conforming to other adopted plans of the City (i.e. water, wastewater, parks, etc.)	✓ Yes	○ No
Compatible with surrounding land uses	✓ Yes	○ No
Able to be adequately served by municipal infrastructure	✓ Yes	○ No
Aligned with the purposes of RSMo. 89.040	✓ Yes	○ No

Statement of Relevant Facts Found:

AG -> M-2 15 acres

M-2 across road

Lift station required

Access to MM where expansion will occur in 2024

Based on these findings, I have concluded to recommend the application to the City Council for: ✓ Approval ○ Denial

Commissioner Name:	Commissioner Signature:	Date:
Brian Daubraya	[signature]	9-11-23

Findings of Fact

REPUBLIC MISSOURI
GROWING TOGETHER

Date of Hearing: 09/11/2023

Time: 6:00

Type of Application: Rezone

Name of Applicant: 1230 S St Hwy MM (REZN 23-006)

Location: City Council Chambers

Based upon the facts presented during the course of this hearing, I have found that the application is generally:

Conforming to the City's adopted Land Use Plan	☑ Yes	○ No
Conforming to the City's adopted Transportation Plan	☑ Yes	○ No
Conforming to other adopted plans of the City (i.e. water, wastewater, parks, etc.)	☑ Yes	○ No
Compatible with surrounding land uses	☑ Yes	○ No
Able to be adequately served by municipal infrastructure	☑ Yes	○ No
Aligned with the purposes of RSMo. 89.040	☑ Yes	○ No

Statement of Relevant Facts Found:

Based on these findings, I have concluded to recommend the application to the City Council for: ☑ Approval ○ Denial

Commissioner Name: Jeff Hays

Commissioner Signature:

Date: 9/11/23

Findings of Fact

REPUBLIC MISSOURI
GROWING TOGETHER

Date of Hearing: 09/11/2023

Time: 6:00

Type of Application: Rezone

Name of Applicant: 1230 S St Hwy MM (REZN 23-006)

Location: City Council Chambers

Based upon the facts presented during the course of this hearing, I have found that the application is generally:

Conforming to the City's adopted Land Use Plan	⊗ Yes	○ No
Conforming to the City's adopted Transportation Plan	⊗ Yes	○ No
Conforming to other adopted plans of the City (i.e. water, wastewater, parks, etc.)	⊗ Yes	○ No
Compatible with surrounding land uses	⊗ Yes	○ No
Able to be adequately served by municipal infrastructure	⊗ Yes	○ No
Aligned with the purposes of RSMo. 89.040	⊗ Yes	○ No

Statement of Relevant Facts Found:

Applicant present, did not speak.
No speakers.

Based on these findings, I have concluded to recommend the application to the City Council for: ⊗ Approval ○ Denial

Commissioner Name: John Alexander

Commissioner Signature:

Date: 9/11/23

Findings of Fact

REPUBLIC MISSOURI
GROWING TOGETHER

Date of Hearing: 09/11/2023

Time: 6:00

Type of Application: Rezone

Name of Applicant: 1230 S St Hwy MM (REZN 23-006)

Location: City Council Chambers

Based upon the facts presented during the course of this hearing, I have found that the application is generally:

Conforming to the City's adopted Land Use Plan	◉ Yes	○ No
Conforming to the City's adopted Transportation Plan	◉ Yes	○ No
Conforming to other adopted plans of the City (i.e. water, wastewater, parks, etc.)	◉ Yes	○ No
Compatible with surrounding land uses	◉ Yes	○ No
Able to be adequately served by municipal infrastructure	◉ Yes	○ No
Aligned with the purposes of RSMo. 89.040	◉ Yes	○ No

Statement of Relevant Facts Found:

Based on these findings, I have concluded to recommend the application to the City Council for: ◉ Approval ○ Denial

Commissioner Name: CYNTHIA HYDER

Commissioner Signature: C. Hyder

Date: 9/11/2023

Findings of Fact

REPUBLIC MISSOURI
GROWING TOGETHER

Date of Hearing: 09/11/2023

Time: 6:00

Type of Application: Rezone

Name of Applicant: 1230 S St Hwy MM (REZN 23-006)

Location: City Council Chambers

Based upon the facts presented during the course of this hearing, I have found that the application is generally:

Conforming to the City's adopted Land Use Plan	☒ Yes	○ No
Conforming to the City's adopted Transportation Plan	☒ Yes	○ No
Conforming to other adopted plans of the City (i.e. water, wastewater, parks, etc.)	☒ Yes	○ No
Compatible with surrounding land uses	☒ Yes	○ No
Able to be adequately served by municipal infrastructure	☒ Yes	○ No
Aligned with the purposes of RSMo. 89.040	☒ Yes	○ No

Statement of Relevant Facts Found:

Based on these findings, I have concluded to recommend the application to the City Council for: ☒ Approval ○ Denial

Commissioner Name: Darran Campbell

Commissioner Signature: [signature]

Date: 9-11-23

REPUBLIC
MISSOURI

AGENDA ITEM ANALYSIS

Project/Issue Name:	A Public Hearing of the City Council Regarding Approving the Annexation of Approximately 40.456 Acres Located at 7217 West Farm Road 182 and Adjacent Right-of-Way.
Submitted By:	Chris Tabor, BUILDS Department Principal Planner
Date:	September 19, 2023

Issue Statement

The BUILDS Department received a Voluntary Annexation Application from Jim Henderson for the Annexation of approximately forty (40) acres of land located at 7217 West Farm Road 182 and adjacent Right-of-Way.

Discussion and/or Analysis

The property owner, Jim Henderson, has submitted a Voluntary Annexation Request for the subject parcel.

City of Republic sanitary sewer is available on the property. City of Republic water is available adjacent to the property. The subject parcel is compact and contiguous with the city limits of the City of Republic, as the subject parcel is surrounded by properties located in the City to the north and west.

The Annexation, if approved by City Council, will effectively zone the subject parcel as Agricultural (AG), as the property has a current Greene County Zoning Designation of Agricultural (A-1), in accordance with City Code Section 435.010.B, which requires all annexed properties to be classified in the zoning district corresponding to Greene County's zoning designation.

Recommended Action

Staff believes the Annexation of the subject property is consistent with the City's Adopted Plans and is recommending approval of the request.

REPUBLIC
MISSOURI

AGENDA ITEM ANALYSIS

Project/Issue Name:	23-37 An Ordinance of the City Council Approving the Annexation of Approximately 40.456 Acres Located at 7217 West Farm Road 182 and Adjacent Right-of-Way.
Submitted By:	Chris Tabor, BUILDS Department Principal Planner
Date:	September 19, 2023

Issue Statement

The BUILDS Department received a Voluntary Annexation Application from Jim Henderson for the Annexation of approximately forty (40) acres of land located at 7217 West Farm Road 182 and adjacent Right-of-Way.

Discussion and/or Analysis

The property owner, Jim Henderson, has submitted a Voluntary Annexation Request for the subject parcel.

City of Republic sanitary sewer is available on the property. City of Republic water is available adjacent to the property. The subject parcel is compact and contiguous with the city limits of the City of Republic, as the subject parcel is surrounded by properties located in the City to the north and west.

The Annexation, if approved by City Council, will effectively zone the subject parcel as Agricultural (AG), as the property has a current Greene County Zoning Designation of Agricultural (A-1), in accordance with City Code Section 435.010.B, which requires all annexed properties to be classified in the zoning district corresponding to Greene County's zoning designation.

Recommended Action

Staff believes the Annexation of the subject property is consistent with the City's Adopted Plans and is recommending approval of the request.

AN ORDINANCE OF THE CITY COUNCIL APPROVING THE ANNEXATION OF APPROXIMATELY 40.456 ACRES LOCATED AT 7217 WEST FARM ROAD 182 AND ADJACENT RIGHT-OF-WAY

WHEREAS, the City of Republic, Missouri, ("City" or "Republic") is a municipal corporation and Charter City located in Greene County, Missouri, being duly created, organized, and existing under the laws of the State of Missouri; and

WHEREAS, the City's BUILDS Department received a voluntary petition ("Application") for the annexation of approximately 40.456 acres of land located at 7217 West Farm Road 182 with an adjacent right-of-way ("Realty"); and

WHEREAS, the Realty is adjacent and contiguous to the present corporate limits of the City; and

WHEREAS, the City submitted the Application to the City Council for a public hearing, and scheduled the public hearing before the Council for September 19, 2023, such hearing being held no less than fourteen (14) days nor more than sixty (60) days after receipt of the Application; and

WHEREAS, on September 5, 2023, the City published notice of the time and date for the public hearing in the *Greene County Commonwealth*, a newspaper of general circulation in the City, such notice being no less than seven (7) days before the date set for the public hearing; and

WHEREAS, on September 19, 2023, the Council conducted the public hearing on the Application, at which all interested persons and entities were afforded the opportunity to present evidence or statements and to otherwise be heard on the matter; and

WHEREAS, no written objections to the proposed annexation were filed with the Council within fourteen (14) days after the date of the public hearing; and

WHEREAS, the Council finds the proposed annexation is reasonable and necessary for the City's continued growth and development, and further finds the City has the ability to furnish normal municipal services to the Realty within a reasonable time.

NOW, THEREFORE, BE IT ORDAINED BY THE CITY COUNCIL OF THE CITY OF REPUBLIC, MISSOURI, AS FOLLOWS:

Section 1: The Realty, more fully identified and described below, is hereby annexed into and made a part of the City of Republic, Missouri, and its boundaries are hereby extended to include the same:

A PART OF THE SOUTHEAST QUARTER OF THE NORTHWEST QUARTER OF SECTION 22, TOWNSHIP 28 NORTH, RANGE 23 WEST, GREENE COUNTY, MISSOURI, AND MORE PARTICULARLY DESCRIBED AS FOLLOWS: BEGINNING AT THE NORTHEAST CORNER OF SAID SOUTHEAST QUARTER OF THE NORTHWEST QUARTER OF SECTION 22; THENCE SOUTH 02°00'28" WEST ALONG THE EAST LINE OF SAID SOUTHEAST QUARTER OF THE NORTHWEST QUARTER A DISTANCE OF 1,328.71 FEET TO THE SOUTHEAST CORNER OF SAID SOUTHEAST QUARTER OF THE NORTHWEST QUARTER; THENCE NORTH 88°07'17" WEST ALONG THE SOUTH

LINE OF SAID SOUTHEAST QUARTER OF THE NORTHWEST QUARTER A DISTANCE OF 1,328.67 FEET;

THENCE NORTH 02°07'58" EAST A DISTANCE OF 1,327.56 FEET TO THE SOUTH LINE OF CENTURY PLACE 2ND ADDITION, AS RECORDED IN PLAT BOOK XX PAGE 14; THENCE SOUTH 88°06'42" EAST ALONG SAID SOUTH LINE A DISTANCE OF 660.60 FEET; THENCE SOUTH 88°13'52" EAST ALONG THE SOUTH LINE OF HIGHLAND MEADOWS PHASE 1 AS RECORDED IN PLAT BOOK YY PAGE 36 A DISTANCE OF 665.17 FEET TO THE POINT OF BEGINNING, AND CONTAINING 40.456 ACRES OF LAND, MORE OR LESS, SUBJECT TO EASEMENTS AND/OR RIGHTS OF WAY.

Section 2: The City Clerk is hereby directed to cause three certified copies of this Ordinance to be filed with the Greene County Clerk's office and one original copy to be recorded by the Recorder of Deeds.

Section 3: The City Clerk is hereby directed to forward to the director of revenue of the State of Missouri by the United States registered mail or certified mail a certified copy of this Ordinance.

Section 4: The WHEREAS clauses above are specifically incorporated herein by reference.

Section 5: The provisions of this Ordinance are severable and if any provision hereof is declared invalid, unconstitutional, or unenforceable, such determination shall not affect the validity of the remainder of this Ordinance.

Section 6: This Ordinance shall take effect and be in force from and after its passage as provided by law.

PASSED AND APPROVED at a regular meeting of the City Council of the City of Republic, Missouri, this _____ day of _____, 2023.

_____
Matt Russell, Mayor

Attest:

_____
Laura Burbridge, City Clerk

Approved as to Form:

Megan McCullough, City Attorney

Final Passage and Vote:



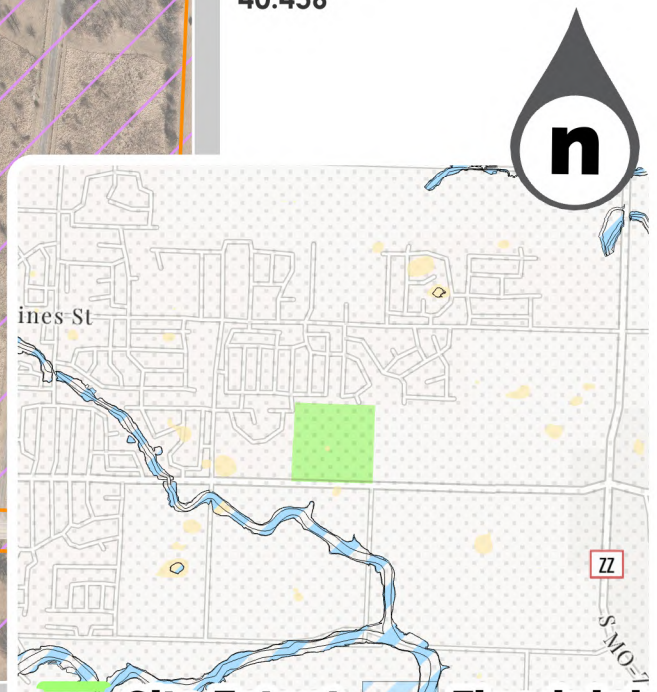

Owner/Applicant
Henderson, Jim E

ADDRESS
7217 W Farm Road 182

ZONING
AGRICULTURE (A-1) | UPON ANNEX: AGRICULTURAL (AG)

WARD
1

ACREAGE
40.456

7217 WEST FARM ROAD 182

ANNX 23-001 | ANNEXATION

REPUB
MISSOURI

Owner/Applicant
Henderson, Jim E

ADDRESS
7217 W Farm Road 182

ZONING
AGRICULTURE (A-1) | UPON ANNEX: AGRICULTURAL (AG)

WARD
1

ACREAGE
40.456



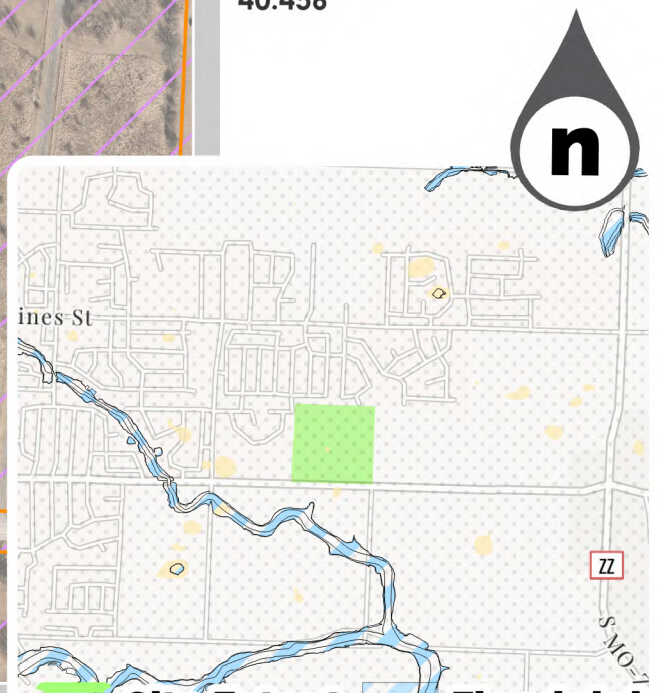

7217 WEST FARM ROAD 182

ANNX 23-001 | ANNEXATION

AGENDA ITEM ANALYSIS

Project/Issue Name:	23-38 An Ordinance of the City Council Approving Amendment of the Zoning Classification of Approximately 40 Acres of Real Property Located at the Intersection of South Farm Road 101 and West Farm Road 170, from Planned Development District (PDD) to Boyce Mixed-Use Planned Development District (PDD).
Submitted By:	Chris Tabor, BUILDS Principal Planner
Date:	September 19, 2023

Issue Statement

Jeffrey Boyce Enterprises, LLC applied to change the Zoning Classification of approximately forty (40) acres of property located northwest of the intersection of West Farm Road 170 and South Farm Road 101 from Planned Development District (PDD) to Boyce Mixed-Use Planned Development District (PDD).

Discussion and/or Analysis

The property subject to this Rezoning Application is comprised of approximately 40 acres of land located Northwest of the intersection of West Farm Road 170 and South Farm Road 101. The property is currently unimproved agricultural property containing no structures.

Applicant's Proposal

The Applicant is proposing the Rezoning of this property to a Planned Development District (PDD) to allow for a mixed-use development consisting of 7 General Commercial (C-2) Lots, 1 Multi-Family Residential (R-3) Lots, and 2 Regional Detention Basin Lots. The Development Plan also contains new water, sanitary sewer, and stormwater systems to support the development and a required Collector class road connecting US Hwy 60 with West Republic Road.

Design Elements of Development Plan

Commercial Use (Lots 1 – 6 and Lot 8) – 22.88 Acres

Lot 1 – 1.68 Acres
Lot 2 – 1.94 Acres
Lot 3 – 4.35 Acres
Lot 4 – 4.40 Acres
Lot 5 – 3.99 Acres
Lot 6 – 2.58 Acres
Lot 8 – 3.94 Acres

All Commercial Lots comply with the regulations and restrictions for the General Commercial (C-2) Zoning District, including but not limited to:

- Permitted Uses
- Setbacks
- Landscaping/Buffering

Additionally, Lot 8 will have a 25' setback from the southern property line to provide additional distance between adjacent residential use lots and the commercial occupant.

Multi-Family Use (Lot 9) – 9.00 Acres

Lot 9 – 9.00 Acres

Lot 9 will comply with the following regulations and restrictions:

- Permitted Uses in compliance with Multi-Family (R-3) Zoning District
- Setbacks in compliance with Multi-Family (R-3) Zoning District
    - 50' Setback along west property line to provide additional distance between adjacent residential use lots and the multi-family property
- Maximum Density of 23 Dwelling Units (DU) per Acre; 207 total DU
- Parking for Lot 9 will be compliance with the City's Off-Street Parking and Loading Requirements with the following exception: Parking to be calculated at 1.64 spaces per unit.
    - Typical Multi-Family Residential parking requirement is 2 spaces per unit.

Regional Detention (Lot 7 and Lot 10) – 3.17 Acres

- Regional Detention and Water Quality Basin
    - Lot 7 – serves Lot 1, Lot 2, Lot 3, Lot 4 (western half), Lot 7, and Lot 8
    - Lot 10 – serves Lot 4 (eastern half), Lot 5, Lot 6, Lot 9, and Lot 10

The following paragraphs contain brief analyses of present site conditions as well as the proposal's relationship to **adopted plans of the City.**

Consistency with the Planned Development District (PDD) Ordinance

The purpose of the Planned Development Regulations is to allow for mixed-use, unconventional, or innovative arrangements of land and public facilities, which would be difficult to develop under the conventional land use and development regulations of the City.

Planned Unit Developments must demonstrate substantial congruence with each of the following conditions to be considered eligible for approval:

- The proposed Development Plan shall involve a mixture or variation of land uses or densities.

- The Boyce Mixed-Use Subdivision is a mixed-use development consisting of commercial and apartment-style multi-family residential dwelling units.

- The proposed Development Plan shall involve the provision of all infrastructure deemed necessary to adequately serve the potential development.
    - The Boyce Mixed-Use Subdivision Infrastructure Plan includes provisions for adequate supply of municipal water and sewer, a plan for stormwater management, and the construction and dedication of a Collector Street from US Hwy 60 to Republic Road, identified on the City's Transportation Plan and OTO's Major Thoroughfare Plan.
- The proposed Development Plan shall involve design elements that promote the City of Republic's Comprehensive Plan and other adopted plans of the City.
    - The City of Republic's Comprehensive Plan promotes the expansion of commercial and residential development at locations supported by the City's water, sanitary sewer, and transportation networks; the Boyce Mixed-Use Subdivision can be adequately supported by the City's existing capacities for water, sewer, and transportation.
- The proposed Development Plan shall involve design elements intended to lessen congestion in the streets; to secure safety from fire, panic, and other dangers; to promote health and the general welfare; to provide adequate light and air; to prevent the overcrowding of land; to avoid undue concentration of population; to preserve features of historical significance; to facilitate the adequate provision of transportation, water, sewerage, schools, parks, and other public improvements.
    - The Boyce PDD Development Plan includes construction of a collector class street with 70' of Right-of-Way connecting US Hwy 60 and Republic Road; the multi-family residential and commercial lots within the development will utilize the new street, with no direct connections to US Hwy 60 or Republic Road.

Consistency with the Comprehensive Plan

The City's Comprehensive Plan generally encourages the expansion of residential and commercial development through proactive rezoning of land at appropriate locations. Appropriate locations are described generally throughout the Plan with regard to the **relationship of land at particular locations to infrastructure capable of supporting various intensities and densities of uses.**

The 2021 Comprehensive Plan and Land Use Plan identifies Land Use Goals and Objectives relating to development, as follows:

- **Goal:** Support new development that is well-connected to the existing community.
    - **Objective:** Encourage development that improves and expands upon existing infrastructure.
    - **Objective:** Promote development aligning with current adopted plans of the City.
    - **Objective:** Support opportunities to create new destination-style commercial developments.

- **Goal:** Recognize potential infill sites as opportunities for development, while mitigating impacts to adjacent established properties.
    - **Objective:** Support the development of vacant parcels as opportunities for densification that is harmonious with surrounding development.

Compatibility with Surrounding Land Uses

The subject site is surrounded by existing Commercially zoned property and large parcel Greene County Agricultural properties with Single-Family homes.

- North: General Commercial (C-2)
- South:
    - Agricultural (AG)
    - Greene County Zoned Agricultural (A-1)
- East:
    - West Republic Road
    - MODOT property
- West: General Commercial (C-2)

The land uses permitted in the Applicant's proposal are considered to be generally compatible with the surrounding commercial and agricultural zoned properties and uses in proximity to the subject parcel.

Capacity to Serve Potential Development and Land Use

Municipal Water and Sewer Service: This site **is** currently served by City of Republic sanitary sewer and water service**.** The development will require the extension of a new water main from the existing 10-inch main parallel to the south side of US Hwy 60, along the new Collector Road serving the development, connecting to the existing 12-inch water main on Republic Road to create a looped water system.

The development will be served by existing gravity sanitary sewer mains running along the northern and southern property lines, flowing to the McElhaney Lift Station and Shuyler Creek Lift Station before being pumped back through a series of forced mains to the Wastewater Treatment Facility.

The Water System, Lift Stations, and the Wastewater Treatment Facility have sufficient capacity to serve the proposed development.

Transportation:

Two Collector Class streets (70 ft Right-of-Way) are depicted in the Development Plan. The first, referred to herein as Collector 1, runs east-to-west and connects US Hwy 60 with Republic Rd (State Route M). The second, Collector 2, runs north-to-south and connects to Collector 1, creating a stub-out to adjacent property at its southern terminus.

The review of this application included an evaluation of the impact of the development on the City's transportation network; a Traffic Impact Study (TIS) was submitted for the project, which was evaluated by the City Engineer and our partner agency, MODOT.

The TIS evaluated the transportation impact through trip generation standards provided by the Institute of Transportation Engineers (ITE) Trip General Manual; these standards include uses and associated number of trips generated by these uses. The TIS evaluated these numbers by utilizing the area and permitted uses within the commercial development areas and the total number of residential dwelling units in the development. The results from the TIS indicate the following improvements are required for the development, which will be designed and reviewed during Infrastructure Review and constructed during the Infrastructure Construction Phase:

- Right-In/Right-Out (RIRO) from the Collector Street onto US Hwy 60
- Right Hand Turn Lane from US Hwy 60 to Collector Street
- Right Hand Turn Lane from Republic Road (State Route M) onto Collector Street
- Left Hand Turn Lane from the Collector to Republic Road (State Route M)

No parcel within the development will have direct access to US Hwy 60 or Republic Road/State Route M; all lots will have access to the new Collector Street.

Stormwater: The Development Plan contains (2) areas designated for stormwater detention, designed to control the release of stormwater attributable from the development. The stormwater detention areas and all open space/common areas will be owned and maintained by the Developer.

Floodplain: The subject parcel **does not** contain a **Special Flood Hazard Area (SFHA/Floodplain).**

Sinkholes: The subject parcel **does** contain several **identified sinkholes** on the northern portion and the southern portion of the property. A Sinkhole Analysis Report will be submitted, reviewed, and approved during the Infrastructure Design Process; a (30) foot setback, required by Republic City Code, has been included on the Development Plan.

All developments must include site design providing for sufficient emergency vehicle access as well as fire protection facilities (e.g. fire hydrants). **Additional elements of code compliance, evaluated at the time of the development proposal, which will impact the mixed-use development of the subject property, include, but are not limited to, the City's Zoning Regulations, adopted Fire Code, and adopted Building Code.** The next steps in the process of development of the subject parcel, upon a favorable rezoning outcome, will be the development, review, and approval of an Infrastructure Permit for the construction of utility services and roads.

Recommended Action

Staff considers the **proposed Zoning Map Amendment (Rezoning to Planned Development District)** to be generally consistent with the **goals and objectives of the Comprehensive Plan**, generally consistent with the **trend of development in the vicinity of the site,** generally **compatible with surrounding land uses,** and **able to be adequately served by municipal facilities.** Specifically, the proposed development can be adequately served by the City's municipal water and sanitary sewer services and the City's transportation network.

Based upon this analysis (performed without the benefit of evidence and testimony of a public hearing), Staff recommends the approval of this application.

AN ORDINANCE OF THE CITY COUNCIL APPROVING AMENDMENT OF THE ZONING CLASSIFICATION OF APPROXIMATELY 40 ACRES OF REAL PROPERTY LOCATED AT THE INTERSECTION OF SOUTH FARM ROAD 101 AND WEST FARM ROAD 170, FROM PLANNED DEVELOPMENT DISTRICT (PDD) TO BOYCE MIXED-USE PLANNED DEVELOPMENT DISTRICT (PDD)

WHEREAS, the City of Republic, Missouri, ("City" or "Republic") is a municipal corporation and Charter City located in Greene County, Missouri, being duly created, organized, and existing under the laws of the State of Missouri; and

WHEREAS, Jeffrey Boyce Enterprises LLC ("Applicant") submitted an application to the City's BUILDS Department to rezone approximately 40 acres of real property located at the Intersection of South Farm Road 101 and West Farm Road 170 in Republic, Missouri ("Property") from Planned Development District (PDD) to the Boyce Mixed-Use Planned Development District (PDD); and

WHEREAS, Applicant additionally sought approval of a development plan for the Boyce Mixed-Use Planned Development District, identified as PDD 23-003 ("Development Plan"); and

WHEREAS, the City submitted the application and Development Plan to the Planning and Zoning Commission ("PZ Commission") and set a public hearing on the application for September 11, 2023; and

WHEREAS, pursuant to Republic Municipal Code § 405.980, the City published notice of the time and date for the public hearing on the application on August 23, 2023, in the *Greene County Commonwealth*, a newspaper of general circulation in the City, such notice being at least fifteen (15) days before the public hearing; and

WHEREAS, pursuant to Republic Municipal Code § 405.980, the City gave notice of the public hearing on the application to the record owners of all properties located within 185 feet of the Property, consistent with the information shown by the Greene County Assessor's Office; and

WHEREAS, the PZ Commission conducted the public hearing on the application and Development on September 11, 2023, after which the PZ Commission rendered written findings of fact on the application, Development Plan, and rezoning and, thereafter, submitted the same, together with its recommendations, to the Council; and

WHEREAS, the PZ Commission, by a vote of 5 Ayes to 0 Nays, recommended approval of the application for rezoning and the Development Plan; and

WHEREAS, the application for rezoning, the Development Plan, and the request to amend the Zoning Code and Official Zoning Map was submitted to the City Council for a first reading at its regular meeting on September 19, 2023, and a second reading at its regular meeting on October 3, 2023, after which the City Council voted to approve the Development Plan and amend the Zoning Code consistent with the application.

NOW, THEREFORE, BE IT ORDAINED BY THE CITY COUNCIL OF THE CITY OF REPUBLIC, MISSOURI, AS FOLLOWS:

Section 1: The Zoning Code and Official Zoning Map are hereby amended to reflect the rezoning of the real property tract comprising of 40 acres located at the

Intersection of South Farm Road 101 and West Farm Road 170, Republic, Missouri, more fully described in the legal description herein below, from Planned Development District (PDD) to the Boyce Mixed-Use Planned Development District (PDD):

ALL OF THE SOUTH ONE-HALF (S 1/2) OF THE SOUTHEAST QUARTER (SE 1/4) OF SECTION TEN (10), TOWNSHIP TWENTY-EIGHT (28), RANGE TWENTY-THREE (23), IN GREENE COUNTY, MISSOURI, EXCEPTING THEREFROM 6.5 ACRES, MORE OR LESS, CONVEYED TO THE STATE OF MISSOURI BY DEED RECORDED IN BOOK 981 AT PAGE 470, IN THE RECORDER'S OFFICE OF GREENE COUNTY, MISSOURI, AND DESCRIBED AS FOLLOWS:

ALL THAT PART OF THE SOUTHEAST QUARTER OF THE SOUTHEAST QUARTER OF SECTION TEN (10), TOWNSHIP TWENTY-EIGHT (28), RANGE TWENTY-THREE (23) LYING NORTHEASTERLY OF THE RIGHT OF WAY ROUTE SN AS DESCRIBED IN DEED RECORDED IN BOOK 620 AT PAGE 634 IN THE RECORDER'S OFFICE OF GREENE COUNTY, MISSOURI, EXCEPTING THEREFROM ANY PART NOW IN THE COUNTY ROAD ALONG THE EAST SIDE OF WITHIN DESCRIBED TRACT. EXCEPT ANY PART THEREOF TAKEN, DEEDED, OR USED FOR ROAD PURPOSES.

SAVE AND EXCEPT:
PART OF THE SOUTH ONE-HALF OF THE SOUTHEAST QUARTER OF SECTION 10, TOWNSHIP 28 NORTH, RANGE 23 WEST, GREENE COUNTY, MISSOURI, BEGINNING ON THE SOUTH LINE OF SAID SOUTH HALF OF THE SOUTHEAST QUARTER 588.4 FEET EAST OF THE SOUTHWEST CORNER OF SAID SOUTH HALF OF THE SOUTHEAST QUARTER, THENCE EAST ALONG SAID SOUTH LINE 1390 FEET, THENCE NORTH PARALLEL TO THE EAST LING OF SAID SOUTH HALF OF THE SOUTHEAST QUARTER 660 FEET. THENCE WEST 1390 FEET, THENCE SOUTH 660 FEET TO THE POINT OF BEGENNING. CONTAINING 21.06 ACRES MORE OR LESS.

SAVE AND EXCEPT:
ALL OF THE SOUTH 888.3 FEET OF THE WEST 588.4 FEET OF THE SOUTH HALF OF THE SOUTHEAST QUARTER (SE1/4), OF SECTION TEN (10), TOWNSHIP TWENTY-EIGHT (28) NORTH, RANGE TWENTY-THREE (23) WEST, IN GREENE COUNTY, MISSOURI CONTAINS 12 ACRES MORE OR LESS.

Section 2: The Development Plan, attached to this Ordinance and labeled “Attachment 1,” is hereby approved and adopted by the Council, along with any modifications and conditions imposed herein.

Section 3: Unless otherwise specifically defined by the approved Development Plan, the development of the tracts of realty contained herein will be regulated according to the requirements of the City of Republic’s Municipal Code of Ordinances.

Section 4: In all other aspects other than those herein amended, modified, or changed, the Zoning Code and Official Zoning Map shall remain the same and continue in full force and effect.

Section 5: The whereas clauses are hereby specifically incorporated herein by reference.

Section 6: This Ordinance shall take effect and be in force from and after its passage as provided by law.

PASSED AND APPROVED at a regular meeting of the City Council of the City of Republic, Missouri, this _____ day of _____, 2023.

_____
Matt Russell, Mayor

Attest:

_____
Laura Burbridge, City Clerk

Approved as to Form:

Megan McCullough, City Attorney

Final Passage and Vote:

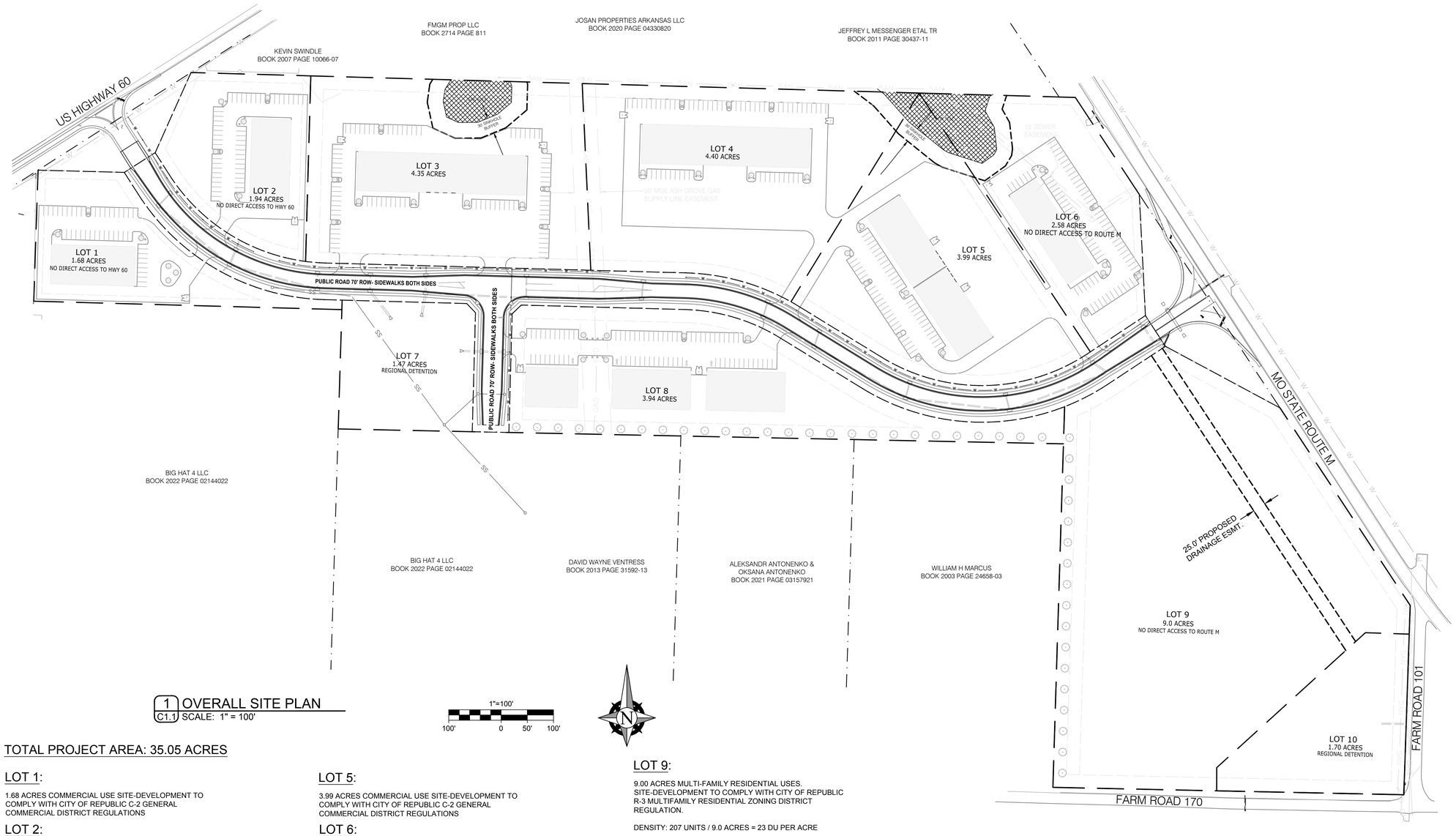

1 C1.1 OVERALL SITE PLAN
SCALE: 1" = 100'

TOTAL PROJECT AREA: 35.05 ACRES

LOT 1:
1.68 ACRES COMMERCIAL USE SITE-DEVELOPMENT TO COMPLY WITH CITY OF REPUBLIC C-2 GENERAL COMMERCIAL DISTRICT REGULATIONS

LOT 2:
APPROXIMATELY 1.94 ACRES COMMERCIAL USE SITE-DEVELOPMENT TO COMPLY WITH CITY OF REPUBLIC C-2 GENERAL COMMERCIAL DISTRICT REGULATIONS

LOT 3:
APPROXIMATELY 4.35 ACRES COMMERCIAL USE SITE-DEVELOPMENT TO COMPLY WITH CITY OF REPUBLIC C-2 GENERAL COMMERCIAL DISTRICT REGULATIONS

LOT 4:
APPROXIMATELY 4.40 ACRES COMMERCIAL USE SITE-DEVELOPMENT TO COMPLY WITH CITY OF REPUBLIC C-2 GENERAL COMMERCIAL DISTRICT REGULATIONS

LOT 5:
3.99 ACRES COMMERCIAL USE SITE-DEVELOPMENT TO COMPLY WITH CITY OF REPUBLIC C-2 GENERAL COMMERCIAL DISTRICT REGULATIONS

LOT 6:
2.58 ACRES COMMERCIAL USE SITE-DEVELOPMENT TO COMPLY WITH CITY OF REPUBLIC C-2 GENERAL COMMERCIAL DISTRICT REGULATIONS

LOT 7:
1.47 ACRES TO BE DEDICATED AS A REGIONAL DETENTION AND WATER QUALITY BASIN FOR LOT 1, LOT 2, LOT 3, WEST HALF OF LOT 4, LOT 7, AND LOT 8.

LOT 8:
3.94 ACRES COMMERCIAL USE SITE-DEVELOPMENT TO COMPLY WITH CITY OF REPUBLIC C-2 GENERAL COMMERCIAL DISTRICT REGULATIONS

LOT 9:
9.00 ACRES MULTI-FAMILY RESIDENTIAL USES. SITE-DEVELOPMENT TO COMPLY WITH CITY OF REPUBLIC R-3 MULTIFAMILY RESIDENTIAL ZONING DISTRICT REGULATION.

DENSITY: 207 UNITS / 9.0 ACRES = 23 DU PER ACRE

PARKING SPACES WILL BE MEET CITY OF REPUBLIC OFF-STREET PARKING AND LOADING REQUIREMENTS WITH THE FOLLOWING EXCEPTION:

PARKING SPACES WILL BE CALCULATED AT 1.64 SPACES PER UNIT.

LOT 10:
1.70 ACRES TO BE DEDICATED AS A REGIONAL DETENTION AND WATER QUALITY BASIN FOR EAST HALF OF LOT 4, LOT 5, LOT 6, LOT 9, AND LOT 10.

SCREENING & BUFFERYARDS:

ALONG THE SOUTH PROPERTY LINE OF LOT 8:
OPAQUE SCREEN, TYPE A PER SECTION 405.810.
25 FOOT BUILDING SETBACK.
ALONG THE WEST PROPERTY LINE OF LOT 9:
OPAQUE SCREEN, TYPE A PER SECTION 405.810.
50 FOOT BUILDING SETBACK.

OFF-STREET PARKING AREAS WHICH ABUT THE PUBLIC STREETS:
6 FEET WIDE CONSISTING OF 1 SHADE TREE PER 50 FEET.

INTERIOR PARKING LOT LANDSCAPING:
LANDSCAPE ISLAND WITH 1 SHADE TREE AND 2 SHRUBS FOR EVERY 20 PARKING SPACES.

PHASING:

ALL INFRASTRUCTURE IMPROVEMENTS INCLUDING ROADS, SIDEWALKS, UTILITIES, AND DETENTION AREAS ON LOTS 7 AND 10 SHALL BE CONSTRUCTED DURING A SINGLE PHASE. LOTS 1, 2, 3, AND 8 TO BE SOLD FOR GENERAL COMMERCIAL USES IN COMPLIANCE WITH C-2 ZONING. LOTS 4, 5, AND 6 TO BE SOLD FOR OFFICE/WAREHOUSE USES IN COMPLIANCE WITH C-2 ZONING. LOT 9 TO BE SOLD FOR MULTI-FAMILY RESIDENTIAL USES IN COMPLIANCE WITH R-3 ZONING.

MAINTENANCE OF COMMON AREAS AND DETENTION:

THE DEVELOPER WILL RETAIN OWNERSHIP AND RESPONSIBILITY FOR MAINTENANCE OF ALL COMMON AREAS AND DETENTION.

OWN
Engineering beyond.™
3213 S. West Bypass
Springfield, MO 65807
417.866.2741
weareown.com
FORMERLY ANDERSON ENGINEERING

BOYCE MIXED USE SUBDIVISION

US HWY 60 & MO STATE ROUTE M
REPUBLIC, MO 65738

REVISIONS

NO.	DESCRIPTION	DATE

DRAWING INFORMATION

PROJECT NO: 22SP10310
DRAWN BY: CMF
CHECK BY: JMD
ISSUED FOR: PERMIT
ISSUED DATE: 07/31/2023

PRELIMINARY
NOT FOR CONSTRUCTION OR PERMIT

ISSUED BY: JARED DAVIS
LICENSE NO: PE No.2016017614

A licensed Missouri Engineering Corporation
COA 00062

SHEET TITLE

BOYCE MIXED USE SUBDIVISION

SHEET NUMBER

1 OF 1

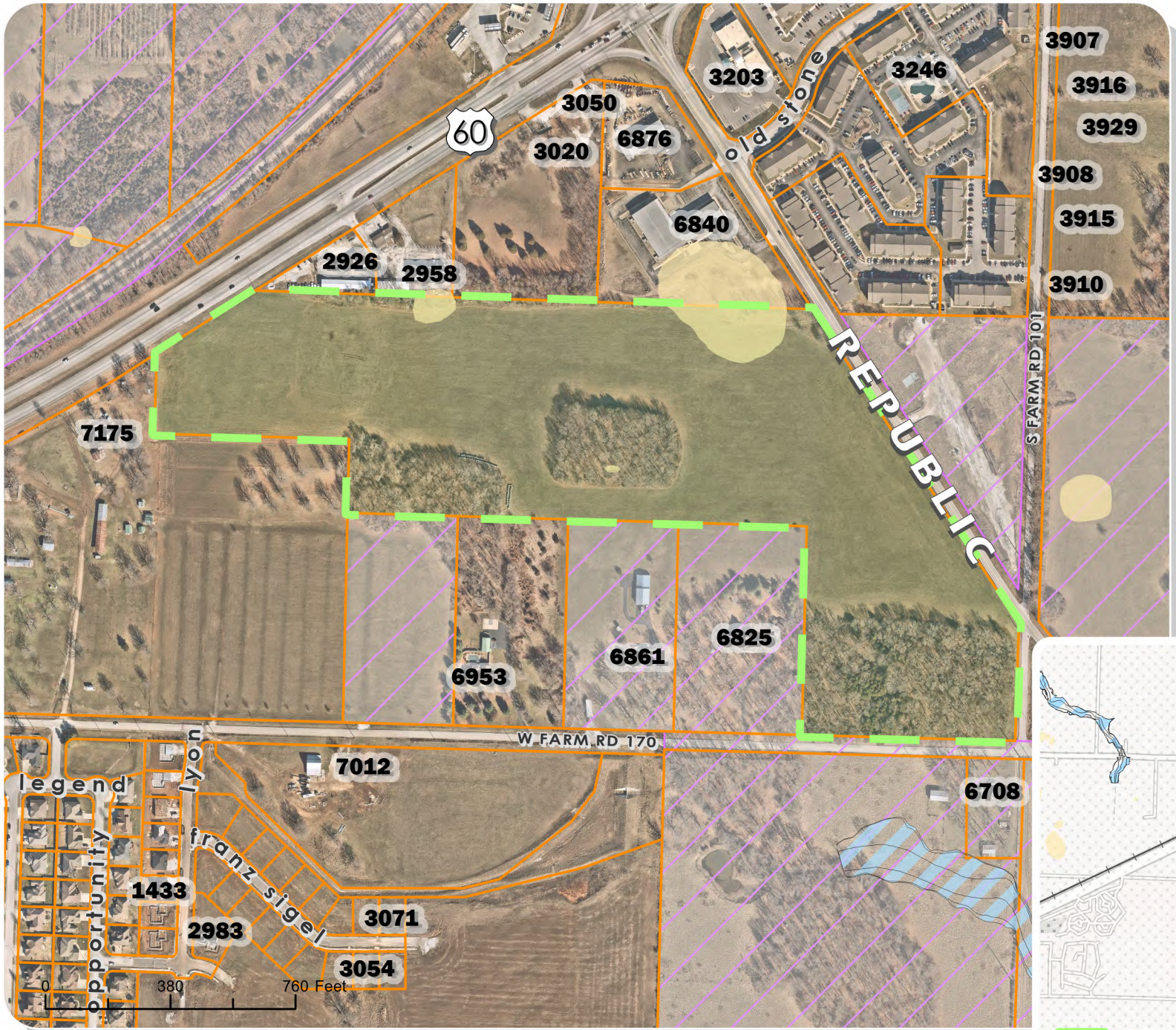

Owner/Applicant
JEFFREY BOYCE ENTERPRISES LLC

ADDRESS
FARM ROAD 170

ZONING
PDD | REQUESTED: BOYCE MIXED-USE PDD

PIN
881710400015

WARD
1

ACREAGE
40

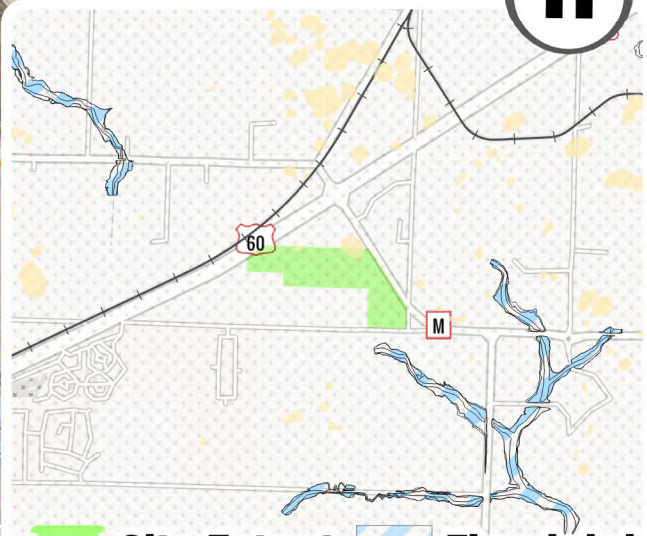

BOYCE MIXED-USE PDD
PDD 23-003 | PDD

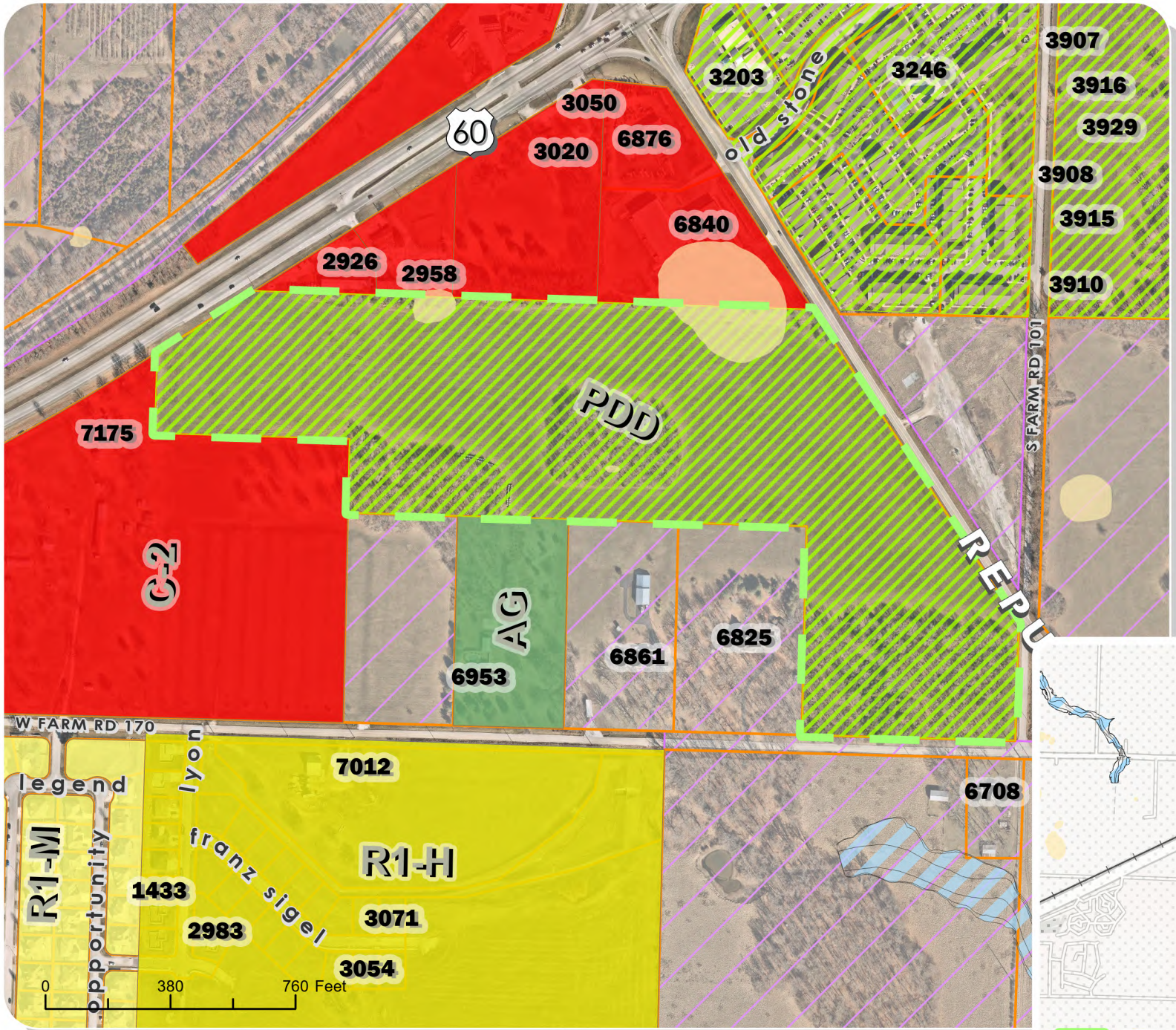

BOYCE MIXED-USE PDD

PDD 23-003 | PDD

Owner/Applicant

JEFFREY BOYCE ENTERPRISES LLC

ADDRESS

FARM ROAD 170

ZONING

PDD | REQUESTED: BOYCE MIXED-USE PDD

PIN

881710400015

WARD

1

ACREAGE

40

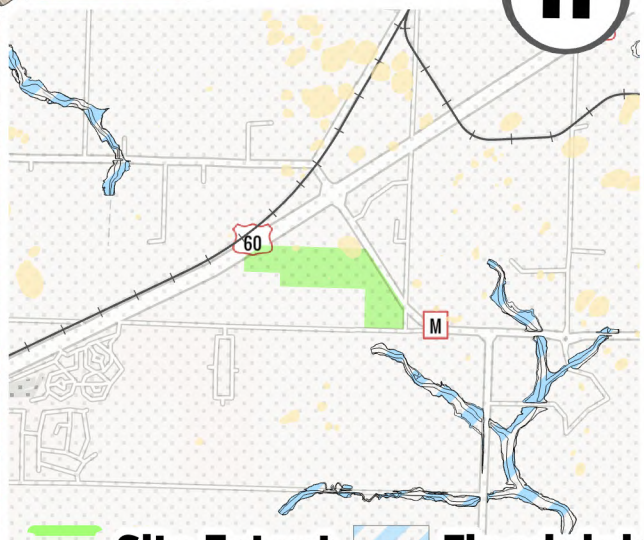

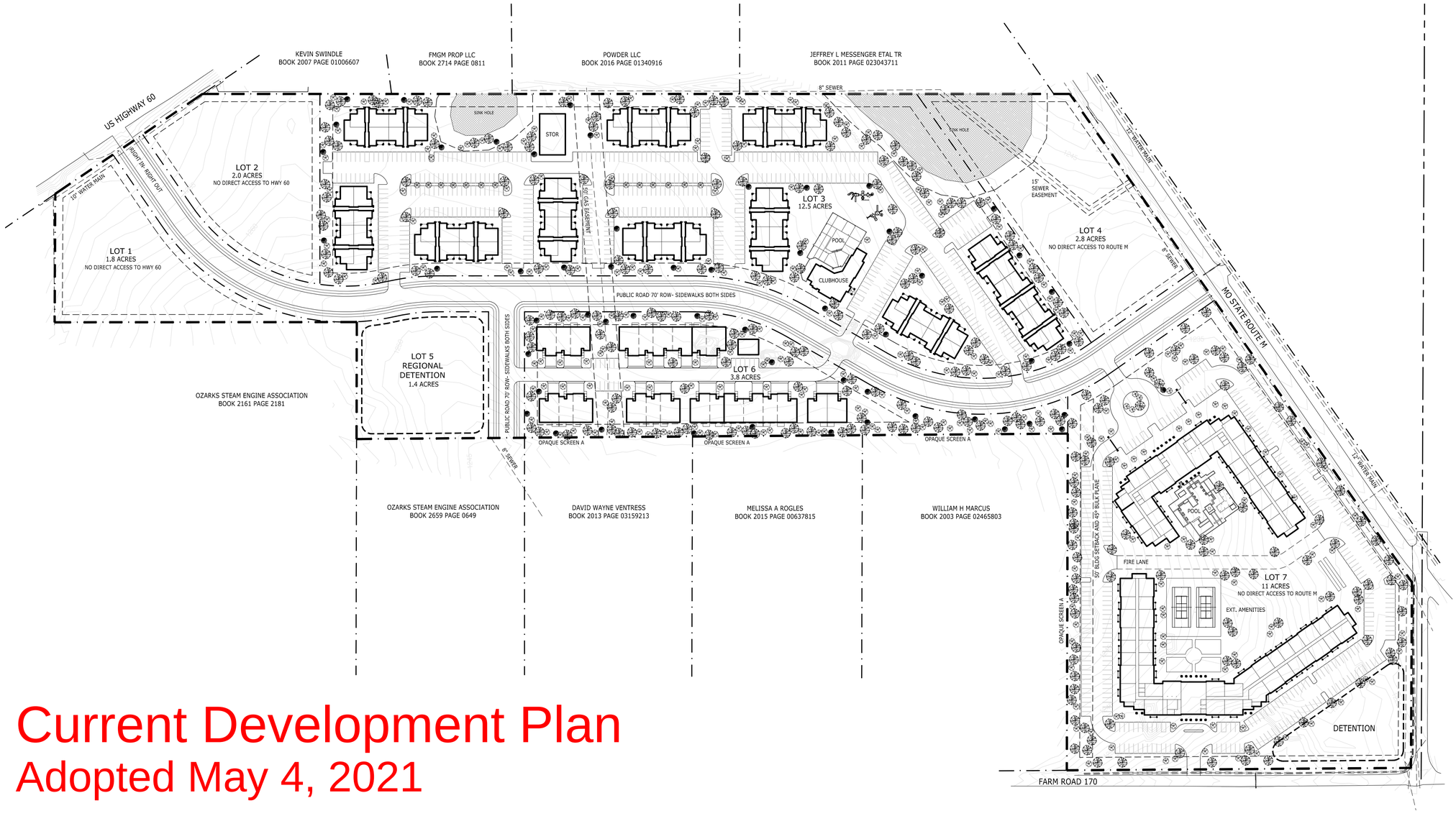

Current Development Plan
Adopted May 4, 2021

3A / C1.1 OVERALL SITE PLAN
scale: 1" = 100'-0"

N

LOT 1
APPROXIMATELY 1.8 ACRE COMMERCIAL USE SITE- DEVELOPMENT TO COMPLY WITH CITY OF REPUBLIC C-2 GENERAL COMMERCIAL DISTRICT REGULATIONS.

LOT 2
APPROXIMATELY 2.0 ACRE COMMERCIAL USE SITE- DEVELOPMENT TO COMPLY WITH CITY OF REPUBLIC C-2 GENERAL COMMERCIAL DISTRICT REGULATIONS.

LOT 4
APPROXIMATELY 2.8 ACRE COMMERCIAL USE SITE- DEVELOPMENT TO COMPLY WITH CITY OF REPUBLIC C-2 GENERAL COMMERCIAL DISTRICT REGULATIONS.

MAY BE SUBDIVIDED.

LOT 5
APPROXIMATELY 1.4 ACRE AREA TO BE DEDICATED AS A REGIONAL DETENTION AND WATER QUALITY BASIN FOR LOTS #1 THROUGH #6

THE DEVELOPER WILL RETAIN OWNERSHIP AND MAINTENANCE OF THE DETENTION AREAS UPON FULL DEVELOPMENT.

LOT 3
APPROXIMATELY 12.5 ACRES MULTI-FAMILY

DENSITY _____ 252 UNITS / 12.5 ACRES = 20 DU PER ACRE

MAX. STRUCTURE HEIGHT_____ 3 STORIES

BUILDING SETBACKS _____ COMPLY WITH R-3 REQUIREMENTS

UNIT MIX

1 BED OR STUDIO _____ 90

2 BEDROOM _____ 132

3 BEDROOM _____ 30

TOTAL _____ 252 UNITS

TOTAL PARKING SPACES PROVIDED _____ 504 SPACES OR 2 SPACES PER UNIT.

LOT 6
APPROXIMATELY 3.8 ACRES MULTI-FAMILY

DENSITY _____ 23 UNITS / 3.8 ACRES = 6 DU PER ACRE

MAX. STRUCTURE HEIGHT_____ 2 STORIES

BUILDING SETBACKS _____ COMPLY WITH R-3 REQUIREMENTS

UNIT MIX

2 BEDROOM _____ 7

3 BEDROOM _____ 16

TOTAL _____ 23 UNITS

TOTAL PARKING SPACES PROVIDED _____ 56 SPACES OR 2.44 SPACES PER UNIT.

LOT 7
APPROXIMATELY 11 ACRES SENIOR 55+ MULTI-FAMILY

DENSITY _____ 207 UNITS / 11 ACRES = 19 DU PER ACRE

MAX. STRUCTURE HEIGHT_____ 3 STORIES

BUILDING SETBACKS _____ COMPLY WITH R-3 REQUIREMENTS

UNIT MIX

1 BED OR STUDIO _____ 106

2 BEDROOM _____ 98

3 BEDROOM _____ 3

TOTAL _____ 207 UNITS

TOTAL PARKING SPACES PROVIDED _____ 338 SPACES OR 1.64 SPACES PER UNIT.

SCREENING & BUFFERYARDS
ALONG THE SOUTH PROPERTY LINE OF LOT #6:
OPAQUE SCREEN, TYPE A PER SECTION 405.810.
25 FEET BUILDING SETBACK

ALONG THE WEST PROPERTY LINE OF LOT #7:
OPAQUE SCREEN, TYPE A PER SECTION 405.810.
50 FEET BUILDING SETBACK

OFF STREET PARKING AREAS THAT ABUT THE PUBLIC STREETS
6 FEET WIDE CONSISTING OF 1 SHADE TREE PER 50 FEET.

INTERIOR PARKING LOT LANDSCAPING
LANDSCAPE ISLANDS WITH 1 SHADE TREE AND 2 SHRUBS FOR EVERY 20 PARKING SPACES.

PHASING
PHASE #1: WILL CONSIST OF ALL INFRASTRUCTURE IMPROVEMENTS INCLUDING ROADS, SIDEWALKS, UTILITIES, DETENTION AREA ON LOT #5, AND CREATION OF COMMERCIAL LOTS TO BE SOLD FOR DEVELOPMENT ON LOT #'S 1, 2 AND 4. FULL DEVELOPMENT OF THE MULTI-FAMILY WITHIN LOT #3.

PHASE #2: WILL CONSIST OF THE PRIVATE STREET AND TOWN HOMES WITHIN LOT #6.

PHASE #3: WILL INCLUDE DEVELOPMENT OF LOT #7 AND THE ASSOCIATED ON-SITE DETENTION BASIN FOR THE SENIOR 55+ DEVELOPMENT.

hdesigngroup
architecture + design

5039 S National Avenue | Springfield, MO 65810 | 417.887.6559

OWNER
JSB INVESTMENTS LLC
1125 W FARM ROAD 178
SPRINGFIELD, MO 65810

PROJECT TEAM
CIVIL ENGINEER

CJW TRANSPORTATION CONSULTANTS
5051 S NATIONAL AVENUE STE 7A
SPRINGFIELD, MO 65810
417.889-3400

PROFESSIONAL SEAL
Brent M. Stevens, AIA - Architect
MO# A-2000151419

PRELIMINARY:
NOT FOR CONSTRUCTION

REVISIONS

NO.	DESCRIPTION	DATE

© 2021 H DESIGN GROUP, LLC
THIS DRAWING AND THE ARCHITECTURAL WORK REPRESENTED ARE OWNED BY H DESIGN GROUP, LLC. COPYRIGHT INCLUDES THIS DRAWING, AS WELL AS, ALL COMPONENTS OF THE CONCEPTUAL DESIGN. REPRODUCTION OF ANY KIND IS STRICTLY PROHIBITED WITHOUT THE EXPRESSED WRITTEN CONSENT OF H DESIGN GROUP, LLC.

PROJECT TITLE:
BOYCE MIXED USE DEVELOPMENT

PROJECT ADDRESS:
US HWY 60 & MM
REPUBLIC, MISSOURI 65738

DEVELOPMENT PLAN
SITE PLAN EXHIBIT

PROJECT NO.: 20-042
DRAWN BY: Author
REVIEWED BY: BMS
DATE: 03.010.2021

SHEET C1.1

Findings of Fact

REPUBLIC MISSOURI
GROWING TOGETHER

Date of Hearing:	Time:	Type of Application:
09/11/2023	6:00	Planned Development District

Name of Applicant:	Location:
Boyce Mixed-Use PDD (PDD 23-003)	City Council Chambers

Based upon the facts presented during the course of this hearing, I have found that the application is generally:

Conforming to the City's adopted Land Use Plan	☒ Yes	○ No
Conforming to the City's adopted Transportation Plan	☒ Yes	○ No
Conforming to other adopted plans of the City (i.e. water, wastewater, parks, etc.)	☒ Yes	○ No
Compatible with surrounding land uses	☒ Yes	○ No
Able to be adequately served by municipal infrastructure	☒ Yes	○ No
Aligned with the purposes of RSMo. 89.040	☒ Yes	○ No

Statement of Relevant Facts Found:

40 acres 7 C-2
1 R-3 → 9 acres

Parking exception? 1.64 vs 2.0
~~Current PDD? Difference?~~
Driveway across from Colletor @ Route M? - MoDOT LOT

Surrounded by C-2 + Ag w/ R-3 close
Water + sewer capacity in place
2 collector streets RIRO on US60

27 acres R-3 → 9 R-3 + 18 C-2

Based on these findings, I have concluded to recommend the application to the City Council for: ☒ Approval ○ Denial

Commissioner Name:	Commissioner Signature:	Date:
Brian Pochrave	[signature]	9-11-23

Findings of Fact

REPUBLIC MISSOURI
GROWING TOGETHER

Date of Hearing:	Time:	Type of Application:
09/11/2023	6:00	Planned Development District

Name of Applicant:	Location:
Boyce Mixed-Use PDD (PDD 23-003)	City Council Chambers

Based upon the facts presented during the course of this hearing, I have found that the application is generally:

Conforming to the City's adopted Land Use Plan	☑ Yes	○ No
Conforming to the City's adopted Transportation Plan	☑ Yes	○ No
Conforming to other adopted plans of the City (i.e. water, wastewater, parks, etc.)	☑ Yes	○ No
Compatible with surrounding land uses	☑ Yes	○ No
Able to be adequately served by municipal infrastructure	☑ Yes	○ No
Aligned with the purposes of RSMo. 89.040	☑ Yes	○ No

Statement of Relevant Facts Found:

Based on these findings, I have concluded to recommend the application to the City Council for: ☑ Approval ○ Denial

Commissioner Name:	Commissioner Signature:	Date:
Jeff Hays		9/11/23

Findings of Fact

REPUBLIC MISSOURI
GROWING TOGETHER

Date of Hearing: 09/11/2023

Time: 6:00

Type of Application: Planned Development District

Name of Applicant: Boyce Mixed-Use PDD (PDD 23-003)

Location: City Council Chambers

Based upon the facts presented during the course of this hearing, I have found that the application is generally:

Conforming to the City's adopted Land Use Plan	☒ Yes	○ No
Conforming to the City's adopted Transportation Plan	☒ Yes	○ No
Conforming to other adopted plans of the City (i.e. water, wastewater, parks, etc.)	☒ Yes	○ No
Compatible with surrounding land uses	☒ Yes	○ No
Able to be adequately served by municipal infrastructure	☒ Yes	○ No
Aligned with the purposes of RSMo. 89.040	☒ Yes	○ No

Statement of Relevant Facts Found:

Applicant present (Engineer) - primarily a change from more multifamily to instead do commercial.

Based on these findings, I have concluded to recommend the application to the City Council for: ☒ Approval ○ Denial

Commissioner Name: John Alexander

Commissioner Signature:

Date: 9/11/23

Findings of Fact

REPUBLIC MISSOURI
GROWING TOGETHER

Date of Hearing: 09/11/2023

Time: 6:00

Type of Application: Planned Development District

Name of Applicant: Boyce Mixed-Use PDD (PDD 23-003)

Location: City Council Chambers

Based upon the facts presented during the course of this hearing, I have found that the application is generally:

Conforming to the City's adopted Land Use Plan	◉ Yes	○ No
Conforming to the City's adopted Transportation Plan	◉ Yes	○ No
Conforming to other adopted plans of the City (i.e. water, wastewater, parks, etc.)	◉ Yes	○ No
Compatible with surrounding land uses	◉ Yes	○ No
Able to be adequately served by municipal infrastructure	◉ Yes	○ No
Aligned with the purposes of RSMo. 89.040	◉ Yes	○ No

Statement of Relevant Facts Found:

Based on these findings, I have concluded to recommend the application to the City Council for: ◉ Approval ○ Denial

Commissioner Name: CYNTHIA HYDER

Commissioner Signature: C Hyder

Date: 9/11/2023

Findings of Fact

REPUBLIC MISSOURI
GROWING TOGETHER

Date of Hearing: 09/11/2023

Time: 6:00

Type of Application: Planned Development District

Name of Applicant: Boyce Mixed-Use PDD (PDD 23-003)

Location: City Council Chambers

Based upon the facts presented during the course of this hearing, I have found that the application is generally:

Conforming to the City's adopted Land Use Plan	☒ Yes	○ No
Conforming to the City's adopted Transportation Plan	☒ Yes	○ No
Conforming to other adopted plans of the City (i.e. water, wastewater, parks, etc.)	☒ Yes	○ No
Compatible with surrounding land uses	☒ Yes	○ No
Able to be adequately served by municipal infrastructure	☒ Yes	○ No
Aligned with the purposes of RSMo. 89.040	☒ Yes	○ No

Statement of Relevant Facts Found:

Based on these findings, I have concluded to recommend the application to the City Council for: ☒ Approval ○ Denial

Commissioner Name: Darrian Campbell

Commissioner Signature: Darrian Campbell

Date: 9-11-23

AGENDA ITEM ANALYSIS

Project/Issue Name:	23-39 An Ordinance of the City Council Approving Amendment of the Zoning Classification of Approximately 17.19 Acres, Located at 3020 and 2946 North York Avenue, from Agricultural (AG) to 6-Point Junction Planned Development District (PDD).
Submitted By:	Chris Tabor, BUILDS Department Principal Planner
Date:	September 19, 2023

Issue Statement

Ricky Haase has applied, on behalf of property owner James Wade, to change the Zoning Classification of approximately 18.39 acres of property located at 3020 North York Avenue from Agricultural (AG) to 6-Point Junction Planned Development District (PDD).

Discussion and/or Analysis

The property subject to this Rezoning Application is three separate parcels comprising approximately 18.39 acres of land located at 3020 N York Ave. The property is currently occupied by two residential structures with the remainder utilized as farmland.

Applicant's Proposal

The Applicant is proposing the Rezoning of the subject property to 6-Point Junction Planned Development District (PDD) to allow for an industrial project consisting of a total of 200,000 SF of warehousing and associated office space to be built over multiple phases of development.

The first phase consists of one building of approximately 50,000 SF, that is restricted to use as warehouse and office space in accordance with Light Industrial (M-1) zoning. Construction of this phase will require the completion of stormwater infrastructure. The location of the required detention basin is depicted on the Development Plan and will be constructed during the first phase. The second phase consists of 75,000 SF of expansion to the initial building. Further phases allow for two additional buildings, one measuring 50,000 SF facility and a second of 25,000 SF.

All development will adhere to the specific requirements of the Approved Development Plan; aspects of the zoning code not specifically included in the Approved Development Plan will require compliance with code requirements at the date of actual development.

The Applicant's proposal of warehouse and associated offices has been designed with consideration for nearby residential uses. The site has frontage along both York Avenue, a local class street where homes

are located, and Sawyer Road, a secondary arterial. The property will not allow direct access to York Avenue, and instead will connect to Sawyer Road.

The project seeks to minimize impacts on nearby property owners through the inclusion of buffering along a portion of York (20' wide) and the southern property line (6' wide). The specific buffer design is included in the Development Plan and is intended to work in conjunction with the 35' limit on maximum building height to screen visual elements from neighbors.

- **General Requirements:**
  - Allows for Warehouse and Office uses as permitted under the Light Industrial (M-1) Zoning District.
  - All lots will comply with the setback, density, and permitted use requirements of the zoning district most closely associated with the proposed use, unless specifically addressed in the Approved Development Plan and/or as outlined below:
- **PDD Specifics:**
  - Bulk, Area and Height Requirements
    - Setbacks
      - Front: 15'
      - Rear:15'
      - Side (Street): 15'
    - Max. Lot Coverage: 90%
    - Max. Building Height: 35'
  - Landscaping:
    - A buffer of at least 20' in width along York Ave starting south of the detention area.
      - Buffer consists of 3' tall berm, 6' tall wood fence, and a variety of trees (2 canopy, 2 evergreen, 1 understory per 100 linear feet).
    - A buffer of at least 6' in width along the southern property line.
      - Type A buffer as defined by Title 405-X. Opaque up to at least 6' with intermittent visual obstructions to 12'.

The following paragraphs contain brief analyses of present site conditions as well as the proposal's relationship to **adopted plans of the City.**

Consistency with the Planned Development District (PDD) Ordinance

The purpose of the Planned Development Regulations is to allow for mixed-use, unconventional, or innovative arrangements of land and public facilities, which would be difficult to develop under the conventional land use and development regulations of the City.

Planned Unit Developments must demonstrate substantial congruence with each of the following conditions in order to be considered eligible for approval:

- The proposed Development Plan shall involve a mixture or variation of land uses or densities.
    - 6-Point Junction specifies exact allowable uses and building footprints as a means of enhancing compatibility with adjacent and nearby properties.
- The proposed Development Plan shall involve the provision of all infrastructure deemed necessary to adequately serve the potential development.
    - All necessary infrastructure has been included in the Development Plan for 6-Point Junction.
- The proposed Development Plan shall involve design elements that promote the City of Republic's Comprehensive Plan and other adopted plans of the City.
    - The City of Republic's Comprehensive and Land Use Plans support the development of an industrial/commercial center where infrastructure and transportation exist.
- The proposed Development Plan shall involve design elements intended to lessen congestion in the streets; to secure safety from fire, panic, and other dangers; to promote health and the general welfare; to provide adequate light and air; to prevent the overcrowding of land; to avoid undue concentration of population; to preserve features of historical significance; to facilitate the adequate provision of transportation, water, sewage, schools, parks, and other public improvements.
    - The 6-Point Junction PDD connects to existing utilities, minimizing impacts and negating added system maintenance.

Consistency with the Comprehensive Plan

The City's Comprehensive Plan generally encourages the expansion of residential and commercial development through proactive rezoning of land at appropriate locations. Appropriate locations are described generally throughout the Plan with regard to the **relationship of land at particular locations to infrastructure capable of supporting various intensities and densities of uses.**

The 2021 Comprehensive Plan and Land Use Plan identifies Land Use Goals and Objectives relating to development, as follows:

- **Goal:** Support new development that is well-connected to the existing community.
    - **Objective:** Encourage development that improves and expands upon existing infrastructure.
    - **Objective:** Promote development aligning with current adopted plans of the City.
- **Goal:** Recognize potential infill sites as opportunities for development, while mitigating impacts to adjacent established properties.
    - **Objective:** Support the development of vacant parcels as opportunities for densification that is harmonious with surrounding development.
- **Goal:** Encourage redevelopment and integration of the former Brookline area.
    - **Objective:** Support the development of an industrial/commercial center where infrastructure and transportation exist.

Compatibility with Surrounding Land Uses

The subject site is surrounded by existing agricultural, residential, commercial, and industrial zoned properties and uses.

Adjacent Property Uses:

- North (across Sawyer Rd): Light Industrial (M-1)
  - Spire
- East (across RR): Agricultural (AG)
  - Farmland/Future City Park
- South: General Commercial (C-2)
  - Trifecta Restoration
- West (across York Ave): Medium-Density Single-Family Residential (R1-M) and Agricultural (AG).
  - Residential

The trend along Sawyer Road is primarily industrial and commercial of varying intensities.
The trend along York Avenue is primarily residential uses.

The land uses permitted in the Applicant's proposal are considered to be generally compatible with the surrounding agricultural, commercial, and industrial zoned properties and uses in proximity to the subject parcel. Compatibility is aided through strict use enforcement and enhanced screening requirements of the PDD

Capacity to Serve Potential Development and Land Use

Municipal Water and Sewer Service: This proposed development can be served by existing City of Republic water and sanitary sewer infrastructure. Both services exist in proximity to the site for development.

Water service is already available, as an 8" water main is already present on the site and available for connection.

Sewer service would require connecting to an 8" gravity main across York Ave. Once connected, the sanitary sewer will flow from the site to the Brookline South Lift Station, McElhaney Lift Station, and Shuyler Creek Lift Station respectively before being pumped to the Wastewater Treatment Facility.

The Water System, Lift Stations, and the Wastewater Treatment Facility have sufficient capacity to serve the proposed development at full build-out.

Transportation: A Traffic Impact Study (TIS) was required for this Application. Development of the property will require adherence to the City's Transportation Plan, Adopted Transportation Map, and improvements required by the TIS for buildout.

The TIS concludes that the project at full buildout would not cause a significant impact on the study area roadway network.

The development will not utilize York Avenue for site access. Instead two access points will be made to Sawyer Road to accommodate circulation.

Stormwater: The Development Plan contains one designated stormwater detention area, designed to accommodate stormwater generated by the development, to be located southeast of the intersection of Sawyer Rd and York Ave. The stormwater detention area will be constructed as part of the first phase; the design of the stormwater area and related stormwater improvements will be reviewed during project development. The detention area will be maintained by the developer and/or property owners.

Floodplain: The subject parcel **does not** contain a **Special Flood Hazard Area (SFHA/Floodplain)** as depicted by the **adopted 2010 FEMA Flood Map.** The subject parcel **does not** contain a **Special Flood Hazard Area (SFHA/Floodplain)** as depicted by the **unadopted preliminary 2019 FEMA Flood Map**.

Sinkholes: The subject parcel **does not** contain any sinkholes as identified by the Greene County Assessor's map.

All developments must include site design providing for sufficient emergency vehicle access as well as fire protection facilities (e.g. fire hydrants). **Additional elements of code compliance, evaluated at the time of infrastructure design, impacting the development of the subject property, include, but are not limited to, the City's Zoning Regulations, adopted Fire Code, and adopted Building Code.** The next steps in the process of development of the subject parcel, upon a favorable rezoning outcome, will be the development, review, and approval of a New Commercial Building Permit including associated infrastructure.

Recommended Action

Staff considers the **proposed Zoning Map Amendment (Rezoning to Planned Development District)** to be generally consistent with the **goals and objectives of the Comprehensive and Land Use Plans**, generally consistent with the **trend of development in the vicinity of the site,** generally **compatible with surrounding land uses,** and **able to be adequately served by municipal facilities.** Specifically, the proposed development can be adequately served by the City's municipal water and sanitary sewer services and the City's transportation network. Based upon this analysis (performed without the benefit of evidence and testimony of a public hearing), Staff recommends the approval of this application.

AN ORDINANCE OF THE CITY COUNCIL APPROVING AMENDMENT OF THE ZONING CLASSIFICATION OF APPROXIMATELY 17.19 ACRES, LOCATED AT 3020 AND 2946 NORTH YORK AVENUE, FROM AGRICULTURAL (AG) TO 6-POINT JUNCTION PLANNED DEVELOPMENT DISTRICT (PDD)

WHEREAS, the City of Republic, Missouri, ("City" or "Republic") is a municipal corporation and Charter City located in Greene County, Missouri, being duly created, organized, and existing under the laws of the State of Missouri; and

WHEREAS, James Wade ("Applicant") submitted an application to the City's BUILDS Department for an amendment to the Zoning Code and Official Zoning Map to rezone certain real property consisting of approximately 17.19 acres, located at 3020 and 2946 North York Avenue in Republic, Missouri, from Agricultural (AG) to the 6-Point Junction Planned Development District (PDD); and

WHEREAS, Applicant additionally sought approval of a development plan for the 6-Point Junction Planned Development District, identified as PDD 23-004 ("Development Plan"); and

WHEREAS, the City submitted the application and Development Plan to the Planning and Zoning Commission ("PZ Commission") and set a public hearing on the application for September 11, 2023; and

WHEREAS, pursuant to Republic Municipal Code § 405.980, the City published notice of the time and date for the public hearing on the application on August 23, 2023, in the *Greene County Commonwealth*, a newspaper of general circulation in the City, such notice being at least fifteen (15) days before the public hearing; and

WHEREAS, pursuant to Republic Municipal Code § 405.980, the City gave notice of the public hearing on the application to the record owners of all properties located within 185 feet of the Property, consistent with the information shown by the Greene County Assessor's Office; and

WHEREAS, the PZ Commission conducted the public hearing on the application and Development on September 11, 2023, after which the PZ Commission rendered written findings of fact on the application, Development Plan, and rezoning and, thereafter, submitted the same, together with its recommendations, to the Council; and

WHEREAS, the PZ Commission, by a vote of 3 Ayes to 2 Nays, recommended approval of the application for rezoning and the Development Plan; and

WHEREAS, the application for rezoning, the Development Plan, and the request to amend the Zoning Code and Official Zoning Map was submitted to the City Council for a first reading at its regular meeting on September 19, 2023, after which the City Council hearing the second reading on October 3, 2023, voted to rezone such property approve the Development Plan, and amend the Zoning Code consistent with the application.

NOW, THEREFORE, BE IT ORDAINED BY THE CITY COUNCIL OF THE CITY OF REPUBLIC, MISSOURI, AS FOLLOWS:

Section 1: The Zoning Code and Official Zoning Map are hereby amended to reflect the rezoning of the real property tract comprising of 17.19 acres located at 3020 and 2946 North York Avenue, Republic, Missouri, more fully described in the legal

description herein below, from Agricultural (AG) to the 6-Point Junction Planned Development District (PDD).

TRACT I:
A TRACT OF LAND SITUATED IN THE NORTHEAST QUARTER (NE¼) OF THE NORTHWEST QUARTER (NW¼) OF SECTION TWO (2), TOWNSHIP TWENTY-EIGHT (28) NORTH, RANGE TWENTY-THREE (23) WEST, GREENE COUNTY, MISSOURI, BEING MORE PARTICULARLY DESCRIBED AS FOLLOWS;

BEGINNING AT THE SOUTHWEST CORNER OF SAID NORTHEAST QUARTER (NE+) AT THE NORTHWEST QUARTER (NW¼); THENCE NORTH 02°07'36" EAST WITH THE WEST LINE OF SAID NORTHEAST QUARTER (NE¼) OF THE NORTHWEST QUARTER (NW¼), A DISTANCE OF 628.06 FEET TO A POINT FOR CORNER; THENCE SOUTH 87°52'24" EAST A DISTANCE OF 466.69 FEET TO A POINT FOR CORNER; THENCE NORTH 02°07'36" EAST A DISTANCE OF 466.75 FEET TO A POINT FOR CORNER; THENCE NORTH 87°52'24" WEST A DISTANCE OF 466.69 FEET TO A POINT ON SAID WEST LINE FOR CORNER; THENCE NORTH 02°07'36" EAST WITH SAID WEST LINE, A DISTANCE OF 319.21 FEET TO A POINT ON THE NORTH LINE OF SAID NORTHEAST QUARTER (NE¼) OF THE NORTHWEST QUARTER (NW¼) FOR CORNER; THENCE SOUTH 88°07'10" EAST WITH SAID NORTH LINE, A DISTANCE OF 459.76 FEET TO A POINT ON THE WESTERLY RIGHT-OF-WAY LINE OF MISSOURI STATE HIGHWAY 360 FOR CORNER; THENCE SOUTH 01°52'50" WEST WITH SAID HIGHWAY RIGHT-OF-WAY LINE, A DISTANCE OF 24.47 FEET TO AN EXISTING 100-D NAIL FOR CORNER; THENCE SOUTH 73°53'39" EAST A DISTANCE OF 67.59 FEET TO AN EXISTING 100-D NAIL FOR CORNER; THENCE SOUTH 85°53'19" EAST A DISTANCE OF 212.55 FEET TO AN EXISTING RIGHT-OF-WAY MARKER FOR CORNER; THENCE SOUTH 43°14'07" EAST A DISTANCE OF 130.11 FEET TO AN EXISTING RIGHT-OF-WAY MARKER FOR CORNER, SAID MARKER BEING ON THE WESTERLY RIGHT-OF-WAY LINE OF BURLINGTON NORTHERN SANTA FE RAILWAY; THENCE SOUTH 22°53'05" WEST WITH SAID RAILWAY RIGHT-OF-WAY, A DISTANCE OF 1,361.00 FEET TO A POINT ON THE SOUTH LINE OF SAID NORTHEAST QUARTER (NE¼) OF THE NORTHWEST QUARTER (NW¼) FOR CORNER; THENCE NORTH 88°29'44" WEST A DISTANCE OF 348.10 FEET TO THE POINT OF BEGINNING.

TRACT II:
A TRACT OF LAND SITUATED IN THE NORTHEAST QUARTER (NE¼) OF THE NORTHWEST QUARTER (NW¼) OF SECTION TWO (2), TOWNSHIP TWENTY-EIGHT (28) NORTH, RANGE TWENTY-THREE (23) WEST, GREENE COUNTY, MISSOURI, BEING MORE PARTICULARLY DESCRIBED AS FOLLOWS;

COMMENCING AT THE SOUTHWEST CORNER OF SAID NORTHEAST QUARTER (NE¼) OF THE NORTHWEST QUARTER (NW¼); THENCE NORTH 02°07'35" EAST, ALONG THE WEST LINE OF SAID NORTHEAST QUARTER (NE¼) OF THE NORTHWEST QUARTER (NW¼), A DISTANCE OF 628.06 FEET TO A CORNER FOR A POINT OF BEGINNING OF THE TRACT HEREIN DESCRIBED; THENCE SOUTH 87°52'24" EAST A DISTANCE OF 466.69 FEET TO A POINT FOR CORNER; THENCE NORTH 02°07'36" EAST, A DISTANCE OF 466.75 FEET TO A POINT FOR CORNER; THENCE NORTH 87°52'24" WEST A DISTANCE OF 466.69 FEET TO A POINT FOR CORNER, SAID POINT BEING ON SAID WEST LINE; THENCE SOUTH 02°07'36" WEST, ALONG SAID WEST LINE, A DISTANCE OF 466.75 FEET TO THE POINT OF BEGINNING.

Section 2: The Development Plan, as incorporated and attached to this Ordinance, is hereby approved and adopted by the Council along with any modifications and conditions imposed herein.

Section 3: Unless otherwise specifically defined by the approved Development Plan, the development of the tracts of realty contained herein will be regulated according to the requirements of the City of Republic's Municipal Code of Ordinances.

Section 4: In all other aspects other than those herein amended, modified, or changed, the Zoning Code and Official Zoning Map shall remain the same and continue in full force and effect.

Section 5: The whereas clauses are hereby specifically incorporated herein by reference.

Section 6: This Ordinance shall take effect and be in force from and after its passage as provided by law.

PASSED AND APPROVED at a regular meeting of the City Council of the City of Republic, Missouri, this _____ day of _____, 2023.

_____

Attest: Matt Russell, Mayor

_____
Laura Burbridge, City Clerk

Approved as to Form:



Megan McCullough, City Attorney

Final Passage and Vote:

08/21/2023

Requirements and Standards Applicable to
6-Point Junction Planned Development

Prepared by:
Olsson Inc, Ricky Haase, PE

A. INTENT

The intent of the Planned Development District (PDD) is to create a development that serves as a site for warehouse buildings and their internal office spaces.

As a PDD the Republic Warehouse Development is required to meet four criteria outlined in 405.220 of the Republic Municipal Code.

The first requirement necessitates that the proposed development plan provides a diverse mixture or variations of land uses and densities. This condition is met through the placement of strict limitations on allowable building footprints and by specifying the uses to be permitted on site – mitigating typical nuisances.

The second requirement of these regulations requires that the design involve the provision of all infrastructure deemed necessary to adequately serve the potential development. The associated Development Plan lays out the proposed infrastructure improvements.

The third requirement of the Zoning Regulations requires the development to promote the City's Comprehensive Plan. This proposed PDD aligns with the City's Objectives 1B and 1C of the Land Use Plan by providing much needed warehouse space. The development also creates jobs in the City by providing office space within the facility. These uses align with the intended use of this property in the comprehensive plan.

The fourth requirement concerns the inclusion of design elements that alleviate existing issues such as congestion, fire safety, promotion of health and welfare, provision of light and air, expectations of overcrowding, preservation of historical features, and/or facilitation of adequate infrastructure and amenities for the community. The proposed PDD meets the intent of the fourth requirement in multiple ways.

This development will connect to the City's utility system that are already present at the perimeter of the development. This ensures the project will have little burden to the City as it relates to utility maintenance upon completion of the project. The City has likely spent a lot of money on construction and maintenance of these utilities to facility development of this property.

The proposed roadway network associated with the PDD conforms to the Major Thoroughfare Plan by providing connection points to Sawyer Road to the North which is classified as a Secondary Arterial. This robust existing roadway system will lessen congestion in the streets. It will also provide easier access for fire, police, and ambulance services to the eastern limits of the city.

To ensure a clean, safe, and vibrant neighborhood, the property is intended to remain under one owner and rent out the spaces. The owner will be responsible for maintenance of all facilities in order to keep the site clean and visually appealing.

B. DEFINITIONS

The definitions contained in Article 405-I shall apply to this ordinance, unless modified herein.

C. INTENSITY OF DEVELOPMENT

Development shall adhere to the following standards.

1. The development shall not have more than 200,000 square feet of building area on the 18.39 acre site. Refer to the attached exhibit for building Locations.

D. USES PERMITTED

1. The entire site shall allow Warehouse and Office uses as defined in the Light Industrial (M-1) District Regulation [405.170] of the City of Republic Municipal Code.

E. BULK, AREA, AND HEIGHT REQUIREMENTS

Development shall adhere to the following standards:

1. Lots will be subject to the City's Site Plan Review requirements and procedures.
2. Minimum Yard Requirements
    a. Front Yard = 15-ft
    b. Rear Yard = 15-ft
    c. Side Street Setback = 15-ft
3. Maximum lot coverage = 90%
4. No maximum building height unless the structure is adjacent to a single-family residential district, in which case the height of the structure shall remain below a forty-five degree (45°) bulk plane as measured from the boundary of the adjacent residential district.

F. Public Facilities

Public utilities, roads, and stormwater shall be designed in accordance with the City of Republic Design Standards. Water will be connected to the existing public system along York Avenue. Electric will be provided by the local utility provider. Sanitary Sewer will connect to the existing public main along York Avenue as well. Stormwater detention will be provided internally to the PDD as seen in the PDD Exhibit.

G. ACCESS TO PUBLIC THOROUGHFARES

Access to the public street system shall conform to those shown on the attached Development Plan as well as the PDD specific traffic study completed. The PDD will not allow direct access to York

Avenue.

H. OFF-STREET PARKING AND CIRCULATION

Off-Street Parking shall comply with the City of Republic Land Use Article 405-VI in effect at the time of development. Final circulation path must be sufficient to allow traversal by fire service vehicles as necessitated by the final design of the building.

I. SIGNS

Signage shall comply with Chapter 415 of the City of Republic Municipal Code in effect at the time of development.

J. LANDSCAPING & SCREENING

1. Landscaping and screening around the western and south lot lines shall be Type A screening per the City of Republic Article 405-X and Article 405-XI in effect at the time of development. See attached PDD Exhibit for screening limits.
2. See attached site section for additional landscaping buffer to be provided along York Avenue.

K. MAINTENANCE OF COMMON AREAS AND FACILITIES

The maintenance of common areas and facilities within the District shall remain the responsibility of the developer(s) or shall be assumed by a duly constituted property owners association meeting all legal requirements.

L. PHASING

Development may be phased provided that all public improvements directly related to each phase are completed at the time of its development and that improvements serving the District as a whole and the adjoining area are completed in a sequence assuring full utility of the District as a whole and all areas within the District and so that future public improvements required by this ordinance or other applicable ordinances of the City are not compromised or rendered unduly difficult. Refer to the Development Plan for Phasing limits. Proposed approximate phasing of lots within the PDD is as follows:

Phase 1: 50,000 SF as seen on the attached exhibit. Will include temporary fire lane on the far side of the building meeting requirements of 2018 IFC. Detention pond will be included for full build out as part of phase 1.
Phase 2: 75,000 SF addition to the initial building as seen in the attached exhibit.
Phase 3: 50,000 SF additional building to the southeast.
Phase 4: 25,000 SF additional building to the southwest.

The construction and, if necessary, final platting of the first phase shall be completed within two (2) years of the date of approval of the development plan. If the first phase has been constructed and a final plat issued, subsequent phases may be submitted covering portions of the approved development plan; provided, however, that all phases of the development plan and final platting must be completed within eight (8) years of the date of approval of the

development plan. If the development plan and final platting have not been completed within the timeline set in this Section, then the development plan shall be resubmitted to the City for extension and approval in accordance with the provisions of Section 410.150 hereof. If an extension and approval is not granted, the original development plan approval shall be null and void. It shall not be the responsibility of the City to notify the applicant of an expired development plan.



CITY REQUIREMENTS

405.570.A.6 – 3 SPACES PLUS 1 PER EMPLOYEE, 1 LOADING SPACE PER 10,000 SF

405.600 – 9'X19' SPACES. 23' AISLE WIDTH

405.770 – 10% REQUIRED LANDSCAPED AREA

405.810 – SCREEN – TYPE A SCREEN – OPAQUE SCREEN 6' IN HEIGHT WITH INTERMITTENT VISUAL OBSTRUCTIONS TO A HEIGHT OF AT LEAST 12'.

PROVIDED:

170 SPACES (INCLUDING 6 ADA)

SETBACK REQUIREMENTS MET

SITE IMPERVIOUS AREA:
18.39 AC TOTAL
10.47 AC IMPERVIOUS (56.93%)
7.92 AC LANDSCAPED AREA (43.07%)

BUILDING AREA (MAXIMUM):

PHASE 1 – 50,000 SF

FUTURE PHASE – 150,000 SF

TOTAL – 200,000 SF

LEGEND

- RIGHT OF WAY
- EXIST. PROPERTY LINE
- DETENTION AREA
- PROP. LANDSCAPE SCREEN
- SS — EXIST. SANITARY PIPE
- P–OH — EXIST. OVERHEAD POWER
- W — EXIST. WATER PIPE
- COMM — COMM — EXISTING PHONE LINES UNDERGROUND

USE REQUESTED:

WAREHOUSE AND OFFICE SPACE IN ACCORDANCE WITH LIGHT INDUSTRIAL (M–1) DISTRICT REGULATIONS (405.170).

N

0' 25' 50' 100'
SCALE IN FEET

PROJECT NO: 023-02800 DRAWN BY: CRW DATE: 08-21-2023	6-POINT JUNCTION PLANNED DEVELOPMENT DISTRICT	olsson 550 St. Louis Street Springfield, MO 65806 TEL 417.890.8802	EXHIBIT 92

DWG: F:\2023\02501-03000\023-02800\40-Design\AutoCAD\Final Plans\Xref\C_PBASE_02302800.dwg USER: cwelmer
DATE: Aug 21, 2023 4:26pm XREFS: V_XTOPO_02302800 V_XBNSY_02302800

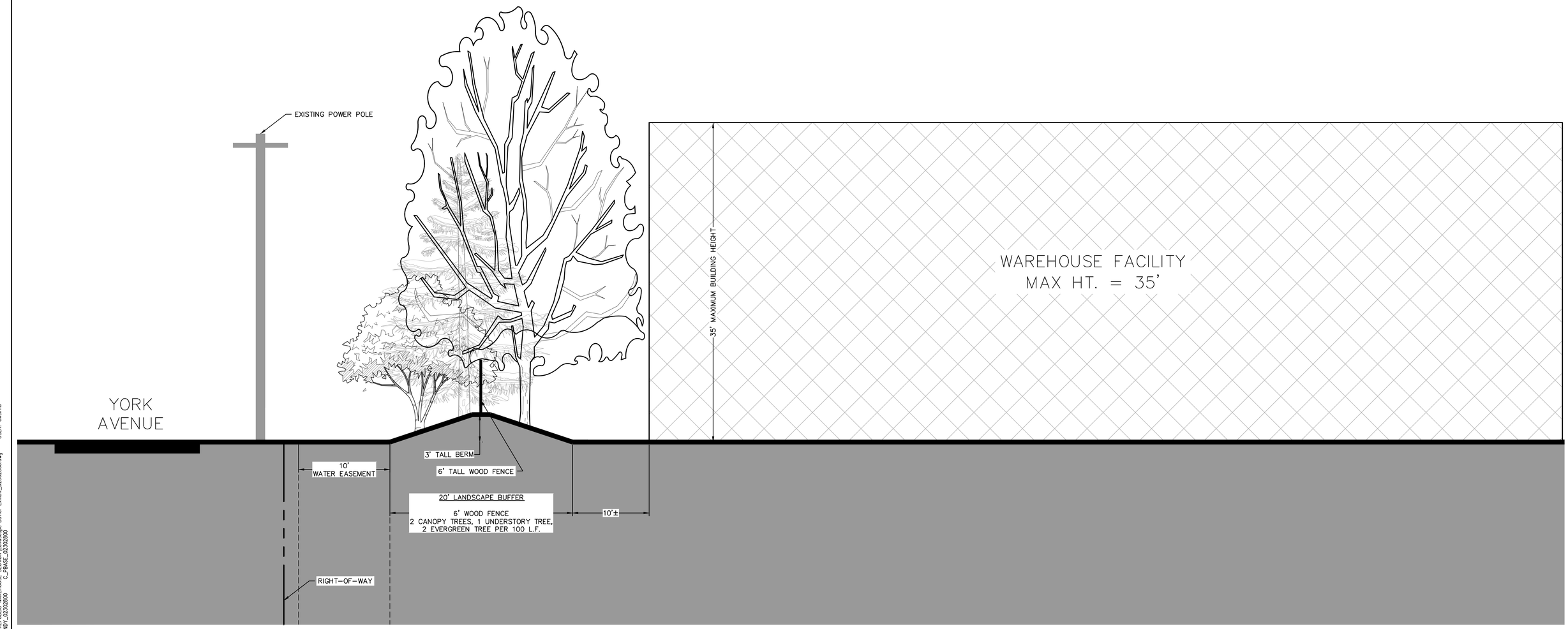

LANDSCAPE BUFFER DETAIL

DWG: F:\2023\02501-03000\023-02800\40-Design\Exhibits\2023.08.03-REPUBLIC WAREHOUSE SECTION\Landscape Buffer Exhibit_02302800.dwg
DATE: Aug 21, 2023 4:32pm
XREFS: V_XTOPO_02302800 V_XBNDY_02302800 C_PBASE_02302800
USER: cweimer

PROJECT NO: 023-02800 DRAWN BY: RAR DATE: 08-21-2023	6-POINT JUNCTION PLANNED DEVELOPMENT DISTRICT	olsson 550 St. Louis Street Springfield, MO 65806 TEL 417.890.8802	EXHIBIT 93

Findings of Fact

REPUBLIC MISSOURI
GROWING TOGETHER

Date of Hearing: 09/11/2023

Time: 6:00

Type of Application: Planned Development District

Name of Applicant: 6-Point Junction Planned Development (PDD 23-004)

Location: City Council Chambers

Based upon the facts presented during the course of this hearing, I have found that the application is generally:

Conforming to the City's adopted Land Use Plan	○ Yes	○ No
Conforming to the City's adopted Transportation Plan	⊘ Yes	○ No
Conforming to other adopted plans of the City (i.e. water, wastewater, parks, etc.)	⊘ Yes	○ No
Compatible with surrounding land uses	○ Yes	⊘ No
Able to be adequately served by municipal infrastructure	⊘ Yes	○ No
Aligned with the purposes of RSMo. 89.040	⊘ Yes	○ No

Industrial next to R1 would thing commercial a better fit for adjacent zoning to Brookline

M-1 is invading the neighborhood
-2752 N Atlantic opposed
Industrial pushing into the neighborhood
Brookline consideration not Annexation

Statement of Relevant Facts Found:

AG -> PDD 18.39 acres

M-1 warehouse space 50, 75, 50, +25 KSF

20ft buffer along York to screen from neighbors
3' berm, 6' fence, 5 trees per 100'

M-1, AG, C-2, R1-M surrounding Retention to south

Water + Sewer capacity Traffic access to Sawyer

Landscaping developed in initial development

-3023 York sent Letter of support
-2891 opposed widening York
-2752 atlantic opposed

No Truck Traffic signs on York

Based on these findings, I have concluded to recommend the application to the City Council for: ○ Approval ⊘ Denial

Commissioner Name: Brian Dobrava

Commissioner Signature: B

Date: 9-11-23

Findings of Fact

REPUBLIC MISSOURI
GROWING TOGETHER

Date of Hearing: 09/11/2023

Time: 6:00

Type of Application: Planned Development District

Name of Applicant: 6-Point Junction Planned Development (PDD 23-004)

Location: City Council Chambers

Based upon the facts presented during the course of this hearing, I have found that the application is generally:

Conforming to the City's adopted Land Use Plan	☑ Yes	○ No
Conforming to the City's adopted Transportation Plan	☑ Yes	○ No
Conforming to other adopted plans of the City (i.e. water, wastewater, parks, etc.)	☑ Yes	○ No
Compatible with surrounding land uses	☑ Yes	○ No
Able to be adequately served by municipal infrastructure	☑ Yes	○ No
Aligned with the purposes of RSMo. 89.040	☑ Yes	○ No

Statement of Relevant Facts Found:

Based on these findings, I have concluded to recommend the application to the City Council for: ☑ Approval ○ Denial

Commissioner Name:

Commissioner Signature:

Date: 9/11/23

Findings of Fact

REPUBLIC
MISSOURI
GROWING TOGETHER

Date of Hearing:	Time:	Type of Application:
09/11/2023	6:00	Planned Development District

Name of Applicant:	Location:
6-Point Junction Planned Development (PDD 23-004)	City Council Chambers

Based upon the facts presented during the course of this hearing, I have found that the application is generally:

Conforming to the City's adopted Land Use Plan	☒ Yes	○ No
Conforming to the City's adopted Transportation Plan	☒ Yes	○ No
Conforming to other adopted plans of the City (i.e. water, wastewater, parks, etc.)	☒ Yes	○ No
Compatible with surrounding land uses	☒ Yes	○ No
Able to be adequately served by municipal infrastructure	☒ Yes	○ No
Aligned with the purposes of RSMo. 89.040	☒ Yes	○ No

Statement of Relevant Facts Found:

Significant work by applicant to accomodate concerns from nearby residential + to specifically limit what they can do with the property in line w/ compatibility.

Applicant (Engineer) + Developer + Real Estate Agent
One resident sent a letter in favor - read by staff.
Three residents concerned about overall development

Based on these findings, I have concluded to recommend the application to the City Council for: ☒ Approval ○ Denial

Commissioner Name:	Commissioner Signature:	Date:
John Alexander		9/11/23

Findings of Fact

REPUBLIC
MISSOURI
GROWING TOGETHER

Date of Hearing: 09/11/2023

Time: 6:00

Type of Application: Planned Development District

Name of Applicant: 6-Point Junction Planned Development (PDD 23-004)

Location: City Council Chambers

Based upon the facts presented during the course of this hearing, I have found that the application is generally:

Conforming to the City's adopted Land Use Plan	✓ Yes	○ No
Conforming to the City's adopted Transportation Plan	✓ Yes	○ No
Conforming to other adopted plans of the City (i.e. water, wastewater, parks, etc.)	✓ Yes	○ No
Compatible with surrounding land uses	✓ Yes	○ No
Able to be adequately served by municipal infrastructure	✓ Yes	○ No
Aligned with the purposes of RSMo. 89.040	✓ Yes	○ No

Statement of Relevant Facts Found:

- Olsson - 2 reps
- Developer spoke about trying to take surrounding Neighbors Concerns in to Consideration
- Realtor.
- letter in Support.
- will soften sharp turn at yoke

Opposed spoke.

Based on these findings, I have concluded to recommend the application to the City Council for: ✓ Approval ○ Denial

Commissioner Name:	Commissioner Signature:	Date:
CYNTHIA HYDER	C. Hyder	9/11/2023

Findings of Fact

REPUBLIC
MISSOURI
GROWING TOGETHER

Date of Hearing: 09/11/2023

Time: 6:00

Type of Application: Planned Development District

Name of Applicant: 6-Point Junction Planned Development (PDD 23-004)

Location: City Council Chambers

Based upon the facts presented during the course of this hearing, I have found that the application is generally:

Conforming to the City's adopted Land Use Plan	☒ Yes	○ No
Conforming to the City's adopted Transportation Plan	☒ Yes	○ No
Conforming to other adopted plans of the City (i.e. water, wastewater, parks, etc.)	☒ Yes	○ No
Compatible with surrounding land uses	☒ Yes	○ No
Able to be adequately served by municipal infrastructure	☒ Yes	○ No
Aligned with the purposes of RSMo. 89.040	☒ Yes	○ No

Statement of Relevant Facts Found:

Based on these findings, I have concluded to recommend the application to the City Council for: ☒ Approval ○ Denial

Commissioner Name: Darran Campbell

Commissioner Signature: [signature]

Date: 9-11-23

AGENDA ITEM ANALYSIS

Project/Issue Name:	23-40 An Ordinance of the City Council Amending Title IV ("Land Use"), Chapter 410 ("Subdivision Regulations") of the Municipal Code of the City of Republic, Missouri.
Submitted By:	Chris Tabor, BUILDS Department Principal Planner
Date:	September 19, 2023

Issue Statement

Consideration to approve Amendments to Chapter 410 Subdivision Regulations.

Discussion and/or Analysis

Chapter 410 Subdivision Regulations is the part of the City's Municipal Code that informs potential developing parties, project design teams, associated contractors, and City Staff as to rules of conduct from the point of application for a Preliminary Plat through to the acceptance of the Final Plat – and the related infrastructure, for creating a subdivision.

Much of the code in Chapter 410 originates from the greater overhaul to the City's Municipal Ordinances that occurred in 1999. Over the years only minor amendments have been put in place as the need arose. The goal of the subject amendment, however, is to bring the chapter in line with existing processes while accurately reflecting the internal ramifications of the creation of the BUILDS Department as well as the subsequent changes in reference language this requires.

Below are brief descriptions of particular elements thought to be of interest:

General

- Updated text to reflect departmental reorganization and creation of the BUILDS Department;
- Updated text to reflect changes in language and standards of state statutes;
- Reduced instances where tasks are tied to specific positions to minimize impact of organizational transitions;
- Updated processes to account for practical application. Includes:
    - Reduction/Alteration of various hard copy requirements to be provided by applicants;
    - Addition of language clarifying digital file requirements for various submittals.

Definitions [410.020; 410.360]

- Update definitions to better encapsulate the terms, therein;
- Add/Remove definitions to account for the new and deleted ordinance text;

- Alteration of “Subdivisions (General)” definition to ensure the subdivision of all land within the city limits complies with the Republic Municipal Code and is approved by the City as required by Missouri Revised Statutes [MO Rev Stat § 89.440 (2022)].
    - The specific alteration to this definition removes the exemption for lots larger than 5 acres.

Preliminary Plat [Article 410-III Major Subdivisions – Preliminary Plat

- Change in the submittal requirements that separates the plat into two documents – Preliminary Survey Plan and Preliminary Engineering Plan. The Preliminary Survey Plan depicts those elements derived from the work of the surveyor and the Preliminary Engineering Plan reflects those of the engineer. This change allows each professional to attest, through their signature and professional seal, only to the work for which they have the necessary expertise.

Stormwater Management For Public And Private Improvements [Article 410-VII]

- Removal of Design Standards in preparation for adoption of “The Stormwater Design Manual” by City Council in subsequent meeting [410.650];
- Require that any overland drainage easements located on a private lot not count toward the total required square footage for that lot [410.650.F.2.a];
- Removal of discretionary allowance for fee in lieu of detention [416.690.G.3].

Recommended Action

Staff recommends the approval of the referenced Amendment.

AN ORDINANCE OF THE CITY COUNCIL AMENDING TITLE IV ("LAND USE"), CHAPTER 410 ("SUBDIVISION REGULATIONS") OF THE MUNICIPAL CODE OF THE CITY OF REPUBLIC, MISSOURI

WHEREAS, the City of Republic, Missouri, ("City" or "Republic") is a municipal corporation and Charter City located in Greene County, Missouri, being duly created, organized, and existing under the laws of the State of Missouri; and

WHEREAS, the City routinely reviews its Municipal Code to ensure conformity with governing state and federal law, enhance clarity, and eliminate ambiguity, as well as to the further promote the City's mission, vision and values in the best interests of the City and its citizenship body as a whole; and

WHEREAS, in reviewing the Municipal Code consistent with the priorities listed herein above, City staff identified the need for various amendments and additions to Chapter 410 of the Municipal Code.

NOW, THEREFORE, BE IT ORDAINED BY THE CITY COUNCIL OF THE CITY OF REPUBLIC, MISSOURI, AS FOLLOWS:

Section 1: Title IV ("Land Use"), Chapter 410 ("Subdivision Regulations") of the Municipal Code of the City of Republic, Missouri is hereby amended to read as follows:

410.010 Jurisdiction

The rules and regulations governing plats of subdivisions of land**,** ~~and~~ lot splits**, and lot combinations** contained herein shall apply within the corporate limits of the City of Republic in accordance with the provisions of Section 89.400, RSMo.

410.020 Definitions

For the purpose of interpreting these regulations, certain words and terms are defined as follows:

ADOPTED PLANS

Any plans, maps, or supporting documentation adopted by the City Council as ordinance(s).

ALLEY

A passage or way affording generally a secondary means of vehicular access to the back or side of abutting properties and is not intended for general traffic circulation.

AS-BUILT PLANS

A plan representing the construction of the actual infrastructure built within the subdivision as it relates to the approved construction plans as well as serving as official public notice of all finish floor elevations.

BLOCK

A tract of land entirely surrounded by public highways, streets, waterways or railway rights-of-way, etc., or any combination thereof.

BUILDING OFFICIAL

The Building Official of the City of Republic, Missouri, or whomever shall be designated as building official.

BUILDS DEPARTMENT ADMINISTRATOR

The Administrator of the BUILDS Department of the City of Republic, Missouri.

CITY
The City of Republic, Missouri.

CITY COUNCIL
The City Council of the City of Republic, Missouri.

CITY ENGINEER
The City Engineer of **the City of** Republic, Missouri, or whomever shall be designated as engineer.

COMPREHENSIVE PLAN
The Comprehensive or Master Plan of the City of Republic, Missouri, whether in whole or in part, as adopted by the Republic Planning **and Zoning** Commission and the City Council and duly recorded by the office of the County Recorder of Greene County.

CITY INSPECTOR
The Construction Inspector of the City of Republic, Missouri, or whomever shall be designated as construction inspector.

COUNTY
Greene County, Missouri**, unless otherwise specified**.

COUNTY CLERK
The office of the Greene County Clerk**, unless otherwise specified**.

CUL-DE-SAC
A short street having one (1) end open to traffic and being terminated at the other end by a vehicular turnaround.

DEVELOPER
See "Subdivider".

DEVELOPER'S AGREEMENT
Agreement between the City of Republic and Developer entered into by City Council.

DIGITAL COPY
A Portable Document Format (PDF) file providing an electronic image of text of text and graphic that looks like a printed document and can be viewed, printed, and electronically transmitted.

EASEMENT
A grant by the property owner of the use, for a specific purpose or purposes, of a strip of land by the general public, utility companies or private individuals.

IMPROVEMENTS
Grading, street surfacing, curbs and gutters, sidewalks, crosswalks, culverts, bridges, water, sanitary and storm sewers, lines, and other utilities, and other required features.

LOT
A parcel of land occupied or intended for occupancy by a building or an integrated group of buildings and uses customarily incidental, including such open spaces as are required by the Zoning Code.

OPEN SPACE, PUBLIC
Land which may be dedicated or reserved for acquisition for general use by the public, including parks, recreation areas, school sites, community or public building sites, and other such areas that shall be deemed necessary.

PLANNING COMMISSION
The City Planning **and Zoning** Commission of Republic, Missouri.

PLANNING COMMISSION REPRESENTATIVE
The ~~City~~ **Principal** Planner, or his/her designee, in matters pertaining to the subdivision of land.

PLAT, FINAL
A complete and exact subdivision plat prepared for official recording as required by Statute and ordinances of the City of Republic to define property boundaries ~~and proposed streets and improvements~~**necessary for the transfer of title by lot and dedication of streets and easements.**

PLAT, PRELIMINARY
A preliminary plat for a subdivision shall **consist of preliminary survey plan and a preliminary engineering plan and shall meet the requirements herein.**~~be a formal plan, drawn to scale, indicating prominent existing features of a tract and its surroundings and the general layout of the proposed subdivision and shall meet the requirements herein.~~

PRE-APPLICATION SKETCH
A general drawing or sketch and discussion showing the general layout and characteristics of the proposed subdivision.

PRELIMINARY ENGINEERING PLAN
A preliminary plan for a subdivision shall be a formal plan, drawn to scale, indicating prominent existing and proposed features of the tract and its surroundings, and the general layout of the proposed infrastructure for the subdivision, and shall meet the requirements herein.

PRELIMINARY SURVEY PLAN
A preliminary plan for a subdivision shall be a formal plan, drawn to scale, indicating prominent existing and proposed features of the tract and its surroundings, and the general layout of the proposed infrastructure for the subdivision, and shall meet the requirements herein.

PRINCIPAL PLANNER
The Principal Planner of the City of Republic, Missouri, or whomever shall be designated by the BUILDS Administrator as Principal Planner.

RIGHT-OF-WAY
~~The land opened, reserved or dedicated for a street, walk, drainage or other public purpose.~~**All land considered as City controlled space by virtue of ordinance, dedication, easements, platting, or other written instruments providing the City control over others usage thereof.**

SUBDIVIDER
A person, firm or corporation undertaking the subdividing or resubdividing of a lot, tract or parcel of land into two (2) or more lots, or other subdivisions of land for the purpose of transfer of ownership or development, whether immediate or future, including all changes in street or lot lines.

SUBDIVISIONS (General)
The subdivision of land shall be deemed to be the division of any parcel or tract of land into two (2) or more parcels, sites or lots, ~~any one (1) of which contains less than five (5) acres~~ for the purpose, whether immediate or future, of transfer of ownership or development, provided however, that the following shall not constitute a subdivision: transfer of interests by will or pursuant to court order; leases for a term not to exceed ten (10) years; mortgages or easements; and the sale or exchange of parcels of land between owners of adjoining property if additional lots are not thereby created, and the lots resulting are not reduced below the size required by law.

SUBDIVISION (Minor)
Notwithstanding other definitions of this Chapter, a minor subdivision is defined as any division of land which creates not more than four (4) tracts.

SUBDIVISION (Major)
Notwithstanding other definitions of this Chapter, a major subdivision is defined as any division of land into five or more lots, shall include the construction and dedication of public infrastructure, shall follow the preliminary/final plat procedure and shall be regulated by the provisions of Articles **III, IV** and **V** of this Chapter.

410.030 No Contract Of Sale
Whoever, being the owner or agent of the owner of any land located within the City of Republic, transfers or sells or agrees to sell or negotiates to sell any land covered by the provisions of Articles **II** — **V** of this Chapter before a subdivision plat has been approved by the City Council and recorded or filed in the office of the Recorder of Deeds of Greene County shall forfeit and pay a penalty, as provided for in the fee schedule found in Section 805.050 of this code, for each lot or parcel so transferred or sold or agreed or negotiated to be sold. The City of Republic enjoin such transfer or sale or agreement by action for injunction brought in any court of equity jurisdiction or may recover the said penalty by a civil action in any court of competent jurisdiction.

410.040 Interpretation And Conflict With Other Laws
This Chapter shall not apply to any lot or lots forming a part of a subdivision created and recorded prior to the adoption of this code, except for further dividing of existing lots, or the addition of improvements not authorized or approved under previous platting. This Chapter is not intended to repeal, abrogate, annul or in any way impair or interfere with existing provisions of other ordinances, or regulations, private agreements, or with recorded restrictive covenants running with the land to which the City of Republic is a party. Where this Chapter imposes a greater restriction upon land than is imposed or required by previous ordinances of the City of Republic, the provisions of this Chapter shall prevail.

410.050 Administration
The provisions of this Chapter shall be administered in accordance with Chapter 89, RSMo., as amended, and shall be administered by the Planning and Zoning Commission, the City Administrator, t**he BUILDS Administrator** ~~the City Planner or Building Official~~ or their ~~delegate~~ **designee, t**he Mayor, and the City Council.

410.060 Fees

The fees for the review of plans and plats and other sundry costs shall be paid to the City by the developer upon submitting a request or application for approval by the City.

410.070 Conformity With Zoning Code

All plats reviewed under provisions of this Chapter shall conform to all Zoning Code provisions for the district in which the proposed plat is to be located. All required zoning changes shall be made prior to approval of the Record Plat.

410.075 Stop Work

A. *Authority*. Whenever the ~~City Planner~~ **BUILDS Administrator** or his/her designee finds any work regulated by this Code or the associated regulations being performed in a manner contrary to the provisions of this Code or in a dangerous or unsafe manner, the **B**~~b~~uilding **O**~~o~~fficial is authorized to issue a stop work order.
B. *Issuance*. The stop work order shall be in writing and shall be given to the owner of the property involved, or to the owner's agent, or to the person doing the work. Upon issuance of a stop work order, the cited work shall immediately cease. The stop work order shall state the reason for the order, and the conditions under which the cited work will be permitted to resume.
C. *Unlawful Continuance*. Any person who shall continue any work after having been served with a stop work order, except such work as that person is directed to perform to remove a violation or unsafe condition, shall be subject to penalties as prescribed by law.

410.080 Denial Of Utility Service, Permits And Plat Approval

A. *Permits*. No building permits shall be issued for any structure on a lot in a subdivision for which a plat has not been finally approved and recorded in the manner prescribed herein.
B. *Denial Of Utility Service, Plat Approval And/Or Building Permits*. To promote and ensure the public health, safety and welfare, the City shall have the authority by written order to deny the connection of utility service, plat or plan approval and/or building permits on the grounds that non-compliance with City regulations, adopted ordinances and/or policies have occurred.

410.090 Compliance With Design Principles Required

In planning and developing a subdivision the developer shall comply with the general principles of design and minimum requirements for the layout of subdivisions set forth in Article **VI**, and with the rules and regulations concerning required improvements set forth in Article **IV**, in these regulations, and in every case shall pursue the procedure in the following Sections. Approval of any plat or plan by the City shall not relieve the subdivider or developer from complying with the regulations established herein.

410.100 Platting Exceptions

A. The requirements of this Chapter do not apply to the following types of land subdivision:
~~1. Recording of a subdivision plat shall not be required in case of the sale or exchange of parcels of land between owners of adjoining properties for the purpose of adjustments in boundaries, provided that: additional lots are not thereby created; that the original lots are not reduced below the minimum sizes required by this Chapter or the Zoning Code; and that a survey of the adjustments of boundaries is recorded with the County Recorder.~~

1. ~~2.~~ The conveyance of parcels of land or interests therein for use as a right of way for railroads or other public utility facilities or other pipe lines which do not involve any new streets or easements of access.
2. ~~3.~~ The conveyance of land for highway or other public purposes or grants or conveyance relating to the vacation of land impressed with a public use.
3. ~~4.~~ Conveyances made to correct description of prior conveyances.

Article 410-II Minor Subdivisions

410.110 Minor Subdivisions

A. All subdivisions of land, not otherwise classified as a major subdivision **and regardless of the size of the area of land to be subdivided**, shall be classified as a minor subdivision and shall be subject to the procedures described in this Article. Applications for minor subdivisions will be reviewed **by the BUILDS Department**, ~~considered, and forwarded to the Planning and Zoning Commission~~ based on the following qualifications:
    1. The proposed subdivision will not create more than four tracts of land, including the remainder to be retained by the owner.
    2. The proposed subdivision does not include the dedication of a new street or other public right-of-way or change in existing streets, general utility easements, water, sewer or other public improvements. It is the intent of this provision to limit approval of minor subdivisions to those cases where the improvements required by these regulations have been provided, with exception to the extension of service to individual lots. It is not the intention of this provision to permit all requests, based solely requests that meet the minimum standards.
    3. The subdivision is in compliance with the Zoning Code and other ordinances and regulations of the City of Republic and no substandard tract, parcel or lot will be created.
    4. The subdivision will not result in substantial increases in service requirements (e.g., utilities, traffic control, parks, schools, streets, etc.), nor interfere with the maintenance of existing service levels (e.g., additional curb cuts, repaving, etc.) as~~d~~ determined by the BUILDS Administrator or their designee.
    5. The parent tract was lawful under these regulations at the time the existing property description was recorded.
    6. The configuration of the property was created by a court decree or order resulting from testamentary or interstate provisions.
    7. The configuration of the property was created by the assembly or combination of existing tracts of record.
    8. Minor subdivisions shall be limited so that no more than four (4) new tracts or parcels of land are created ~~by minor subdivision~~ from the original parent tract or parcel as that tract or parcel was at the time of annexation, or else as the parcel was platted within a major subdivision in the interest of preventing the circumvention of the major subdivision process. Upon a request for a second (2nd) minor subdivision of a tract or parcel previously subdivided into fewer than four (4) new tracts or parcels, **the BUILDS Department may request that City** Council ~~may~~ authorize staff by resolution to execute a subsequent minor subdivision that otherwise meets the minor subdivision requirements.

410.120 Minor Subdivisions Procedures

A. *Filing Procedures*. The applicant shall submit a **digital**~~minimum of five (5)~~ cop**y**~~ies~~ of the proposed minor subdivision ~~or more, as required by the~~Community Development Department, a completed application form and applicable application fees, as provided for in the fee schedule found in Section 805.050, to the Republic ~~Community Development Department~~**BUILDS Department**. ~~A completed minor subdivision checklist shall accompany all applications for subdivision.~~

B. *Review Criteria And Procedures*. An application for minor subdivision shall be reviewed for conformance with the City's zoning and subdivision regulations. The ~~Community Development~~**BUILDS** Department staff~~, public works staff and the City Engineer~~ shall use the following criteria to review the minor subdivision for its conformance and shall ensure the development in the proposed location:

1. Will be in conformity with the Comprehensive Plan, thoroughfare plan, zoning regulations or other plans officially adopted by the Planning and Zoning Commission and the City Council~~;~~**.**

C. *Effect Of Minor Subdivision Approval*. Minor subdivision approval shall confer upon the developer the right that the City will not change the general terms and conditions under which the approval was granted. Within sixty (60) days after approval of the plat by the ~~Community Development Department~~**BUILDS Department** staff, the subdivider shall file said plat with the County Recorder. The subdivider shall pay the cost of recording the plat~~, easements, right-of-way deeds~~ and any other related accompanying documents. If the plat is disapproved, the ~~Community Development~~**BUILDS** Department staff shall notify the applicant in writing of the actions and reasons therefore. If the applicant shall fail to record the plat within sixty (60) days, then the plat shall be held for naught.

D. *Information Required*. The following information is required on all minor subdivision plats submitted for approval. The required information may be combined for presentation on one (1) or more drawings or maps. In the interests of clarity, speed and efficiency in the review process, ~~Community Development~~**BUILDS Department** ~~–~~staff may require that the information be presented on separate or additional drawings or maps. In all cases the minor subdivision plat submission shall be designed in conformity with the Republic Zoning Code, Chapter **405**, and shall include the following information:

1. The proposed subdivision name, the general location, as it is commonly known, or by some other name by which the project may be identified, the name and address of the present owner and sub divider and the surveyor. The City shall supply a case number identifying the minor subdivision prior to submission.
2. Title, **bar** scale, north arrow, date of preparation and each date~~,~~ which a revision was made.
3. Location by section, township, range, City, County, State or if a re-subdivision of an existing or approved subdivision, then by lot or block numbers and name of original subdivision.
4. The names, location and dimensions of adjacent streets within any adjoining subdivision.
5. **The accuracy class of property shall be noted on the plat as Urban Class property or Rural Class property.**
    a. **For Urban Class property the uncertainty due to random errors of any dimension or direction, distance or coordinate shown on the plat shall not exceed fifty parts per million (50 ppm) or one-tenth of a foot (0.10') for distances less than two thousand feet (2,000') at the sixty-eight percent (68%) confidence level [one (1) sigma].**

b. For Rural Class property the uncertainty due to random errors of any dimension or direction, distance or coordinate shown on the plat shall not exceed one hundred parts per million (100 ppm) or one tenth of a foot (0.10') for distances less than one thousand feet (1,000') at the sixty-eight percents (68%) confidence level [one (1) sigma].

6. ~~5.~~ The plat ~~boundaries~~ shall show the ~~external~~ bearings **of all boundary lines, and** distances ~~and internal angles~~ **shall be displayed** ~~with~~ dimensione**d**~~s~~ in hundredths of **a foot**~~feet~~. ~~A minimum closure of one-tenth of a foot (0.10) or 1:20,000 for distances greater than two thousand (2,000) feet (minimum standards for urban class property survey) to close the traverse within a maximum of one (1) foot in 10,000 feet.~~ All bearings shall be ~~obtained~~ **on Grid North and by means of GPS, or optical instruments using celestial or solar observations.**~~by determination of true north by solar or celestial observation.~~
7. ~~6.~~ The boundary lines, location and dimensions **by bearings and distance** of ~~existing and~~ newly created tracts, parcels or lots that are part of the minor subdivision shall be shown on plat. ~~The dimensions and location of all arcs, radii, internal angles, points of curvature and tangent boundaries and other pertinent survey information necessary to an accurate description and location.~~ Survey data shall meet **all applicable portions of** the **current** ~~standards promulgated by the State of Missouri,~~ "Missouri **Standards for Property Boundary Surveys" as promulgated by the Departments of Agriculture, Division of Weights, Measures and Consumer Protection**~~Minimum Standards for Property Boundary Surveys", Division of Geology and Land Survey, Missouri Department of Natural Resources~~. All survey datum shall be vertically **tied to the NAVD 88 datum and shall graphically show a** horizontal~~ly~~ tie~~d~~ to **two subdivision corners by bearing and distance from the nearest published GRS monument which name and/or designation number, date of adjustment and coordinates shall be noted. If the MoDOT Real Time Network is used in lieu of a GRS monument, then a statement to that effect shall be noted along with the epoch/date of subdivision control. Also, State Plane Coordinates of at least two external boundary corners of subdivision shall be shown**~~the Missouri Geographical Reference Stations (GRS)~~.
8. ***Curve Data.*** **When a boundary line is on a circular curve, the curve data shall be shown in place or on an included Curve Table.**
    a. Curve data shown shall consist of at least the following: curve number/name if table is used, delta or central angle, radius, arc length, chord length, and bearing.
    b. Non-tangent curves shall be noted in place or within a Curve Table and shall show: Central Angle rather than Delta, bearing from radius point to point of curvature, and all other curve components mentioned in the above provision.
9. ~~7.~~ Names of adjacent subdivisions and owners of adjoining parcels of **land not** ~~un~~subdivided ~~land~~.
10. ~~8.~~ The exact location and distances of all structures and other physical improvements in relation to proposed lot lines.
11. ~~9.~~ The extent and location of floodplains, floodways, or other waterways of record; elevations of which, shall be based on applicable Flood Insurance Studies, Flood Insurance Rate Maps, Flood Boundary and Floodway Maps.
12. ~~10.~~ Location of sanitary sewer, storm sewers, water mains, gas lines, fire hydrants, electric and telephone poles and street lights.

~~13. 11. Topography, contours at vertical intervals shall be shown as follows:~~

~~a. Average slope less than six percent (6%)—two (2) foot interval contour map~~
~~b. Average slope over six percent (6%)—five (5) foot interval contour map~~

13. ~~12~~. Existing zoning classification of the minor subdivision and adjacent area.
14. ~~13.~~ Setback lines on all lots and other sites.
15. ~~14~~. Certification by Missouri **Professional Land Surveyor** ~~registered land surveyor~~ as to accuracy of survey as such:

    That I, _____, do hereby certify that this plat was prepared under my supervision from an actual survey of the land herein described prepared by _____ dated _____ and signed by _____ P.L.S. No. _____ and that the corner monuments and lot corner pins shown herein were placed under the personal supervision of _____ P.L.S. No. _____ in accordance with ~~the~~**all applicable portions of the current Missouri Standards for Property Boundary Surveys as promulgated by the Department of Agriculture, Division of Weights, Measures and Consumer Protection.**~~Division of Geology and Land Survey, Missouri Department of Natural Resource's "Minimum Standards for Property Boundary Surveys".~~

    Date Prepared: _____

    Signature: _____

    Missouri P.L.S. No. _____

16. ~~15~~. Certificate of Approval by the ~~Community~~**BUILDS**~~Development~~ **Department** staff (to be placed on plat) which shall be provided as follows:

    In accordance with the provisions as set forth in the Subdivision Regulations of Republic, Missouri, I _____, do hereby certify that on the _____ day of _____, 20___, the ~~Community Development~~**BUILDS** Department approved the request for a minor subdivision for _____.

    Any further subdivision of the above described land or modifications of the land description(s) will require reapproval in accordance with the Subdivision Regulations of the City of Republic, Missouri.

    _____
    ~~Community Development~~**BUILDS** Department **Representative**

    _____
    Date

17. ~~16~~. Statement of owner**(s)** certifying that ~~he/she~~**the owner** had title to the land being subdivided:

    As owner I have caused the land described on this plat to be surveyed, divided, mapped, and all access rights reserved and dedicated as represented on the plat.

_____
Owner and/or Subdivider

_____
Date

E. *Final Submittal*. Final submittal of the Minor Subdivision Plat shall be prepared on a reproducible original (mylar) twenty-four (24) inches by thirty-six (36) inches or those dimensions required by the Greene County Recorder of Deeds. In addition to the original the City may require additional elements to incorporate the Minor Subdivision into the City map. The following items shall be submitted:

~~1. Sixteen (16) inches x twenty-four (24) inches scaled reproducible mylar for the City's plat book.~~
~~2. Four (4) blue line copies (24" x 36").~~

1. ~~3.~~ All applicable off-site easements and right-of-way deeds.
2. ~~4.~~ Copy of private and restrictive covenants to be recorded.
3. ~~5.~~ Digital copy of subdivision plat, cad file, etc. for City map upgrades.

Article 410-III Major Subdivisions -- Preliminary Plat

410.130 Major Subdivisions -- Preliminary Plat
All subdivision of land classified as a major subdivision shall be subject to the procedures described in this Article. Approval of a Final ~~or Record~~ Plat shall be subject to approval of a Preliminary Plat in accordance with regulations contained herein.

410.140 Application For Preliminary Plat
The developer shall submit a **digital**~~minimum of five (5)~~ copy**ies** ~~of~~ of the proposed Preliminary Plat **consisting of the associated Preliminary Engineering Plan and Preliminary Survey Plan** ~~or more~~, as required by the City, a completed application form and applicable application fees, as provided for in the fee schedule found in Section 805.050, to the Republic ~~Community Development~~**BUILDS** Department at least twenty (20) working days prior to the meeting at which approval is requested. A completed Preliminary Plat checklist shall accompany all applications for major subdivisions.

410.150 Review Criteria And Procedures For Preliminary Plat

A. Application and Preliminary Plat shall be reviewed for conformance with all applicable City adopted codes and regulations by the **BUILDS Department staff**~~City Planner~~. If the **BUILDS Department staff**~~City Planner or City Engineer~~ reviews the application and plat and finds that it is incomplete or that the requirements of this Chapter, the comprehensive plan or other adopted plans have not been met, ~~than~~ the **BUILDS Department**~~City Planner~~ shall so notify the applicant in writing of any deficiencies. Once all deficiencies have been addressed and the **BUILDS Department**~~CityPlanner and City Engineer~~ ha**s**~~ve~~ approved the plat, ~~than~~ a recommendation for approval or denial shall be transmitted to the Planning and Zoning Commission. After receiving comments and recommendations from the ~~City~~ **BUILDS Department staff**~~Planner~~, the Planning and Zoning Commission shall review the Preliminary Plat for its conformance to the following review criteria and shall ensure the development, in the proposed location:

1. Will not endanger the public health or safety;
2. Will not injure the value of adjoining property or abutting property;
3. Will be in conformity with the Comprehensive Plan, Transportation Plan, Zoning Code, Water System Master Plan, Wastewater System Facility Plan or other plans officially adopted by the City Council; and
4. Will be in harmony with the area in which it is located.

B. The Planning and Zoning Commission may request modifications to the Preliminary Plat. The **Planning and Zoning** Commission shall then confer approval, conditional approval or disapproval of the Preliminary Plat within forty-five (45) days of filing and transmit all copies of the Preliminary Plat together with written reasons for its action to the City Council. The approval or the refusal to approve the Preliminary Plat by the City Council shall take place within thirty (30) days from and after the date in which the Planning and Zoning Commission has made a recommendation to approve or refuse to approve the Preliminary Plat. Once the City Council have approved or refused to approve the Preliminary Plat, the **BUILDS Department**~~City Planner~~ shall notify the owner or applicant of the decision in writing.

410.160 Effect Of Preliminary Plat Approval

Preliminary Plat approval shall confer upon the developer, for a period of two (2) years from date of approval, the conditional right that the City Council will not change the general terms and conditions under which the approval was granted. After approval of the Preliminary Plat, the developer may proceed with the detailed construction plans for all required infrastructure of the area planned for inclusion on the final plat. The City Council, upon recommendation by the Planning and Zoning Commission, may extend this two (2) year period if the developer has applied in writing for such an extension and the Planning and Zoning Commission and City Council determine a longer period should be granted due to unusual circumstances. If an extension is not granted, the Preliminary Plat approval is null and void. If no Final Plat of a subdivision for which preliminary approval has been given is approved within said two (2) year period, or such longer period as the City Council may allow, a resubmission and review by the Planning and Zoning Commission and City Council shall be required. It shall not be the responsibility of the City to notify the applicant of an expired Preliminary Plat.

410.170 Phased Construction And Platting

If phased construction is planned, the construction and final platting of the first phase shall be completed within two (2) years of the date of approval of the Preliminary Plat. Subsequent phases of the ~~f~~Final ~~p~~Plat may be submitted covering portions of the approved ~~p~~Preliminary ~~p~~Plat; provided, however, that all phases of the ~~p~~Preliminary ~~p~~Plat must be completed within four (4) years of the date of approval of the ~~p~~Preliminary ~~p~~Plat. If all phases of the ~~p~~Preliminary ~~p~~Plat have not been completed within four (4) years of the date of approval of the ~~p~~Preliminary ~~p~~Plat, then the ~~p~~Preliminary ~~p~~Plat shall be resubmitted to the City for extension and approval in accordance with the provisions of Section **410.150** hereof. If an extension and approval is not granted, the original ~~p~~Preliminary ~~p~~Plat t approval shall be null and void.

[Ord. No. 03-56 §1, 8-25-2003]

410.180 Existing And Proposed Features To Be Shown On Preliminary Plat

A. **For all applications made, the Preliminary Plat submission must consist of a Preliminary Engineering Plan and a Preliminary Survey Plan. These two independent elements making up the entirety of the Preliminary Plat must be provided on separate pages. The Preliminary Plat submission must contain all of the following information for approval and shall be designed in conformity with the Design Standards contained in Article IV.** ~~The following information is~~

~~required on all Preliminary Plats submitted for approval. The required information may be combined for presentation on one (1) or more drawings or maps. In the interests of clarity, speed and efficiency in the review process, the City Planner may require that the information be presented on separate or additional drawings or maps. In all cases the Preliminary Plat submission should include the following and shall be designed in conformity with the Design Standards contained in Article VI.~~

1. ~~*Name and code*. The proposed name of the subdivision, which shall not duplicate or closely resemble the name of another, previously recorded subdivision in the City of Republic.~~**The Preliminary Engineering Plan shall serve as a preliminary construction document reflecting the general layout of all infrastructure for the proposed subdivision and must contain all of the following information:**
    a. ***Boundary lines*. The boundary lines of subject property along with lot and easement lines, accurate in scale, of the tract to be subdivided. To reduce clutter during review, the above items may be lighter in color than the prominent items required on this plan.**
    b. ***Survey acknowledgement*. The name and license number of the Professional Land Surveyor or holder of a Corporate Survey License who provided the boundary information for the Preliminary Engineering Plan, and the date of usage conformation shall be noted on Plan.**
    c. ***Streets and other features*. The location, widths and names of all existing streets or other public ways within or adjacent to the tract.**
    d. ***Existing utilities*. Including but not limited to electric, gas, sewer, telephone, water mains, storm sewer, culverts, and other aboveground and underground structures within the tract and immediately adjacent thereto with pipe sizes and grades indicated.**
    e. ***Proposed design of streets, drainage, etc*.**
        (1) **The layout, names and right of way widths of proposed streets, alleys and easements; the location and approximate sizes of catch basins, culverts and other drainage structures; the location of proposed sewer lines, water lines, fire hydrants and other related infrastructure planned to serve the development.**
    f. ***Topography*. Contours at vertical intervals shall be based on the NAVD 88 datum or City monuments and shall be shown as follows:**
        (1) **Average slope less than six percent (6%)—two (2) foot interval contour map;**
        (2) **Average slope over six percent (6%)—five (5) foot interval contour map.**
    g. **The Preliminary Engineering Plan shall bear the date, signature and seal of a Professional Engineer holding a valid license to practice in the State of Missouri and shall be present on each sheet submitted.**
    h. **North point*, etc*. Title, bar scale, north arrow, date of preparation and date of each successive revision.**
2. ~~*Owners of record*. The names and addresses of the owner(s) of record, developer(s), engineer, and/or surveyor responsible for the subdivision design.~~**The Preliminary Survey Plan must contain all of the following information:**
    a. ***Name and code*. The proposed name of the subdivision, which shall not duplicate or closely resemble the name of another, previously recorded subdivision in the City of Republic.**

b. *Owners of record*. The names and addresses of the owner(s) of record, developer(s), and/or surveyor responsible for the subdivision design.

c. *Vicinity map*. A vicinity map at a scale of four hundred (400) feet or more to the inch shall be drawn on the Preliminary Survey Plan. The map shall indicate:

(1) Section, Township, Range.

(2) Adjacent City Limits, other corporation or ad hoc district lines, such as school or sewer districts, etc.

(3) The nearest existing highways or thoroughfares, streets and alleys in neighboring subdivisions or property.

d. *Abutting owners*. The name of adjacent subdivisions and the names of record owners of adjacent parcels of unplatted land.

e. *Boundary lines*. The boundary lines, accurate in scale, of the tract to be subdivided.

f. *Streets and other features*. The location, widths and names of all existing or platted streets or other public ways within or adjacent to the tract, and other important features such as existing permanent buildings; large trees and watercourses; railroad lines; corporation and township lines.

g. *Other Existing Elements.* Right-of-way for streets and all easements for drainage, sewer, water and other utilities adjacent or connecting to tract.

h. *Proposed Elements.* All proposed right-of-way for streets and all easements for drainage, sewer, water and other utilities planned to be within the tract. and immediately adjacent thereto.

i. *Proposed design of streets, drainage, etc*.

(1) The layout, names and right-of-way widths of proposed streets, alleys and labeled easements intended to serve the development.

(2) Where additional right of way is required along an existing road, new right-of-way line(s) shall be based off section or the adjacent aliquot part line rather than center-line road splits.

(3) Exemptions or modifications may be made by the BUILDS Administrator or their designee.

j. *Proposed layout and legal description*. The legal description of the entire site to be subdivided, including acreage in tract, boundary and easement lines, locations and dimensions and bearings of newly created tracts, parcels or lots that are part of the subdivision shall be shown on the Preliminary Survey Plan. The dimensions and location of all arcs, radii points of curvature, tangent boundaries, and other pertinent survey information necessary to an accurate description and location. Survey data shall meet all applicable portions of the current Missouri Standards for Property Boundary Surveys as promulgated by the Department of Agriculture, Division of weights Measures, and Consumer Protection. All survey datum shall be vertically tied to the NAVD 88 datum and shall graphically show a horizontal tie to two subdivision corners bearing and distance from the nearest published GRS monument which name and/or designation number, date of adjustment and coordinates shall be noted. if the MoDOT Real Time Network is used in lieu of a GRS monument, then a statement to that effect shall be noted along with the Epoch of subdivision control.

(1) *Curve data* — When a boundary, easement, lot or street is on a circular curve, data shall be shown in place or on an included Curve Table. Curve data shown shall consist of at least the following: Curve number/name

if table is used; Delta or central angle; Radius; Arc length; Chord length and bearing.

(2) When curved lot lines are concentric to the centerline of street it shall be noted as such on the Preliminary Survey Plan.

(3) Non-tangent curves shall be noted in place or in Curve Table and shall show Central Angle rather than Delta; Bearing from radius point to point of curvature and all other curve components mentioned above.

k. *Lot information*. The plat shall indicate the area, lot size, proposed setbacks and exact location and distance of all structures and other physical improvements in relation to proposed lot lines. Each lot should bear sequential numbering.

l. *Zoning*. Zoning boundary lines and proposed use of property.

m. *North point, etc*. Title, bar scale, north arrow, date of preparation and date of each successive revision.

n. *Floodplains, etc.* The extent and location of floodplains, floodways or other waterways of record; elevations of which, shall be based on applicable Flood Insurance Studies, Flood Insurance Rate Maps, Flood Boundary and Floodway Maps.

***o.* *Sinkholes*. The extent and location of sinkholes must be shown, the location of which shall be based on the latest data from the Greene County Assessor's Department, a report conducted by a Geotechnical Engineer, or a source approved by the BUILDS Department Administrator or their designee. Any sinkhole and its associated thirty-foot "No Build" buffer zone must be entirely contained within a common lot.**

p. The Preliminary Survey Plan shall bear the signature and seal of a Professional Land Surveyor holding a valid license to practice in the State of Missouri and shall contain the following statement to be completed by that individual:

(1) That I, _____, do hereby certify that this plat was prepared under my supervision from an actual survey of the land herein described prepared by _____ dated _____ and signed by _____ P.L.S. No. _____ and that the corner monuments and lot corner pins shown herein were placed under the personal supervision of _____ P.L.S. No. _____ in accordance with all applicable portions of the current Missouri Standards for Property Boundary Surveys as promulgated by the Department of Agriculture, Division of Weights, Measures and Consumer Protection.

Date Prepared: _____

Signature: _____

Missouri Professional Land Surveyor No. _____

~~3. *Vicinity map*. A vicinity map at a scale of four hundred (400) feet or more to the inch shall be drawn on the preliminary plat. The map shall indicate:~~

~~a. Section, Township, Range.~~

~~b. Adjacent City Limits, other corporation or ad hoc district lines, such as school or sewer districts, etc.~~

c. The nearest existing highways or thoroughfares, streets and alleys in neighboring subdivisions or property.

4. *Abutting owners*. The name of adjacent subdivisions and the names of record owners of adjacent parcels of unplatted land.

5. *Boundary lines*. The boundary lines, accurate in scale, of the tract to be subdivided.

6. *Streets — other features*. The location, widths and names of all existing or platted streets or other public ways within or adjacent to the tract, and other important features such as existing permanent buildings; large trees and watercourses; railroad lines; corporation and township lines, utility lines, etc.

7. *Existing utilities*. Existing sewer, gas, telephone, water mains, culverts and other underground structures within the tract and immediately adjacent thereto with pipe sizes and grades indicated.

8. *Topography*. Topography, contours at vertical intervals shall be based on USGS datum or City monuments and shall be shown as follows:

a. Average slope less than six percent (6%)—two (2) foot interval contour map

b. Average slope over six percent (6%)—five (5) foot interval contour map

9. *Proposed design — street, drainage, etc*. The layout, names and widths of proposed streets, alleys and easements; the location and approximate sizes of catch basins, culverts and other drainage structures; the location of proposed sewer lines, water lines, fire hydrants and other related infrastructure planned to serve the development.

10. *Proposed layout and legal description*. The legal description of the entire site to be subdivided, including acreage in tract, boundary lines, locations and of newly created tracts, parcels or lots that are part of the subdivision shall be shown on plat. The dimensions and location of all arcs, radii, internal angles, points of curvature, and tangent boundaries, and other pertinent survey information necessary to an accurate description and location. Survey data shall meet the standards promulgated by the State of Missouri, "Missouri Minimum Standards for Property Boundary Surveys", Division of Geology and Land Survey, Missouri Department of Natural Resources. All survey datum shall be vertically and horizontally tied to the City of Republic Geographical Reference Stations (GRS).

11. *Lot information*. The plat shall indicate the area, lot size, proposed setbacks and exact location and distance of all structures and other physical improvements in relation to proposed lot lines.

12. *Zoning*. Zoning boundary lines and proposed use of property.

13. *North point, etc*. Title, scale, north arrow, date of preparation and date of each successive revision.

14. *Floodplains, etc.* The extent and location of floodplains, floodways or other waterways of record; elevations of which, shall be based on applicable Flood Insurance Studies, Flood Insurance Rate Maps, Flood Boundary and Floodway Maps.

15. *Location of model home*. The location of proposed model home or spec. house and required parking.

16. *Commercial and industrial subdivisions*. Preliminary Plats for industrial or commercial subdivisions shall delineate who will be responsible for addressing open space, landscaping and buffer yard requirements.

410.190 Model Home Procedure

~~1. *Purpose*. To provide a procedure whereby the construction of a model home or homes may begin prior to the recording of the Final Plat.~~

~~2. *Procedure*. After receiving approval of the Preliminary Plat of a proposed subdivision from the Planning and Zoning Commission and City Council and after an approved set of construction plans have been submitted, the developer may submit an application for a model home for review by the City Planner and Building Inspector. The application for a model home shall include all information as routinely required. In addition, the application shall be accompanied by a plan, which shall show the location, street elevation, size and the number and location of parking areas of the model home in relation to the lots, streets and utilities proposed in the subdivision.~~

~~3. *Sale Or Occupancy*. No part of the proposed subdivision may be conveyed, nor an occupancy permit issued, for any structure therein until the display home has been located on an approved lot in a recorded subdivision. The Building Inspector, with approval of the City Planner, may issue a temporary occupancy permit for the use of the home as a model, office or showroom during the duration of development of the subdivision, home construction, etc.~~

~~4. *Driveways And Off-Street Parking*. Off-street areas used for standing and maneuvering of vehicles shall have concrete or asphalt driving surfaces adequate for all-weather use, transitioning at the appropriate grade and so drained as to avoid flow of water across sidewalks.~~

Article 410-IV Major Subdivision -- Improvements

410.200 General Procedures For The Preparation And Submission Of Subdivision Improvements Plans

After approval of the Preliminary Plat and prior to approval of the Final Plat, Construction Plans shall be prepared for all or a specified phase of the subdivision.

410.210 Procedure For Submission Of Subdivision Improvement Plans

A. *Preparation Of Plans*. It shall be the responsibility of the developer to have construction plans for streets, utilities and other required improvements prepared and submitted to the City for review. The Construction Plans for all aspects of the site development shall be prepared by a qualified ~~p~~Professional ~~e~~Engineer, registered in the State of Missouri. All improvements shall be designed and constructed in accordance with requirements of Article **VI**. General Principles of Design and Minimum Requirements for the Layout of Subdivisions**. In addition, all improvements shall be designed and constructed in accordance with the "Standard Specifications and Details for Water and Sewer Construction", and the "Stormwater Management and Design Criteria Manual"** ~~and in accordance with the "Construction Specifications for Public Improvements, City of Republic"~~, as amended from time to time, on file with at the offices of the City of Republic ~~Public Works~~**BUILDS** Department and incorporated herein by reference. ~~Five (5)~~**Three (3) physical** copies **and a digital version in pdf** ~~shall be submitted for review to the~~ **BUILDS Department** ~~Public Works Director~~. The Construction Plan shall be any scale ~~from (1 inch = 10 feet) through (1 inch = 50 feet), so long~~ as the scale is an increment of ten (10) feet and is sufficiently clear in reflecting details of the proposed construction. **The signature and seal of the Professional Engineer in responsible charge shall appear on every plan sheet along with title, bar scale, north arrow, date of preparation and each date a revision was made shall be shown on each page as applicable.** Construction Plans shall be prepared on exhibits 24 inches x 36 inches and shall be bound by staple on one side. All plan sheets shall be prepared to a degree to allow for adequate review and construction. Each page shall contain an approval block for approval from the City of Republic ~~Public Works Department~~. The ~~City~~**BUILDS Department** may require additional details to be developed to establish clarity for review and construction.

B. *Approval Of Construction Plans*. The ~~City Planner~~ **BUILDS Department** shall coordinate review and subsequent approval, with all related City departments, ~~the Public Works Director and City Engineer,~~ of the Construction Plans. If the ~~City Planner~~**BUILDS Department** determines that the plans do not meet the minimum standards and require modification, correction and are not approvable, **then**~~than the City Planner~~**BUILDS Department staff** shall forward a letter to the developer and his/her engineer stating the deficiencies. After all related deficiencies have been addressed and approval is given by all related departments ~~and the City Engineer~~, the ~~City Planner~~**BUILDS Department** shall issue an appropriate letter certifying approval**, send digital version of plans with approval signature from City,** and **provide** notice to proceed with an application for water and sewer main extension and other related permits from outside agencies.

C. *Review By Outside Agencies*. Engineering drawings of all required improvements shall be reviewed and approved by the ~~City~~**BUILDS Department**, except for improvements to be made under the jurisdiction of other Municipal, County or State agencies, in which case the drawings shall be submitted to the appropriate agency for review and approval. Where review and approval of engineering drawings is made by such agency, **the BUILDS Department**~~the CityPlanner~~ shall be given written confirmation that the necessary reviews have been completed and approvals have been granted.

D. *Review By Consultants*. Expenses incurred by the City for required reviews, inspections, and/or related testing shall be reimbursed to the City, by the developer, for all costs incurred by it in performing such review, inspection and/or testing, including all professional fees incurred as a result thereof. To insure payment or reimbursement of such costs, fees and expenses, all developers, and such other persons or entities associated with developers, as the **BUILDS Department** ~~Community Development Department~~ deems appropriate, shall execute a promissory note, payable to the order of the City on demand, in such amount as is anticipated to cover such costs, fees and expenses. The maker or makers of such promissory note may satisfy the same by the timely payment of all costs, fees and expenses incurred by the City as identified hereinabove. Such promissory note shall provide for the payment of interest at no less than twelve percent (12%) per annum from and after the date of demand and shall further provide for the payment of attorney fees by the maker or makers in the event of default.

E. *Pre-Construction Meeting And Final Plan Submittal*. The City ~~Planner~~ shall coordinate a pre-construction meeting with the developer, Project Engineer, Construction Inspector, ~~Public Works Director~~ **City Engineer,** general contractor, all appropriate subcontractors, and department heads. All related construction practices, policies and requirements will be discussed and established at the pre-construction meeting. It is the responsibility of the applicant, engineer and contractor to check and review all City requirements relating to the construction of public improvements. A minimum of ~~four (4)~~ **two (2)** sets of approved plans**, bearing the signature of the City Engineer,** prepared on twenty-four (24) inches by thirty-six (36) inches **D Size**, bound plan sheets and **two (2)**~~one (1) five (5)~~ set~~s~~ prepared on ~~twelve (12) inches by eighteen (18)~~**eleven (11) inches by seventeen (17)** inches **B Size**, bound plan sheets shall be submitted at or before the pre-construction meeting.

F. *Construction Permit*. No person, firm or corporation shall develop, install, alter, grade, remove vegetation, fill or modify any tract of land, roadway or any City-owned utility within the City of Republic or cause the same to be undertaken without first securing the approval of the construction plans as required by this Chapter or other City ordinances. The City shall charge a construction permit fee, as provided for in the fee schedule found in Section 805.050, for plan review and field inspection of all related public infrastructure including water, sewer, streets, stormwater and related infrastructure to be dedicated to the City as part of the development. Furthermore, no construction permit shall be issued until the following has been received:

1. Receipt of paid construction permit fees on file relating to inspection of infrastructure.
2. The minimum number of approved construction plans **sent** to the ~~City Planner~~**BUILDS Department**, sealed by the Project Engineer and signed under the hand of the ~~Public Works Director~~ **City Engineer** or his/her designee.
3. Approvals and permits from other affected County, State or Federal agencies.
4. All off-site utility easements drainage easements and right-of-way deeds shall be recorded by the County Recorder of Deeds and provided to the City at or before the pre-construction meeting.
5. **Confirmation of execution of any Developer's Agreement(s) for deferral of required infrastructure construction.**

G. *Phasing*. Where a subdivision is to be developed in phases, the provisions of this Article shall apply to each phase. However, improvements and financial guarantees may be required to extend beyond the boundaries of a subdivision phase if such extension is necessary to ensure the relative self-sufficiency of the phase pending completion of the entire subdivision. Improvements and financial guarantees may also be required for public infrastructure beyond the boundaries of a particular phase of the subdivision in order to secure the construction of planned infrastructure improvements that are necessitated in order to conform to the City's adopted Comprehensive Plan or constituent parts thereof. Such extensions, schedules, and similar arrangements shall be set forth in an agreement between the developer and the Council prior to approval of the Final Plat.

H. *Modification During Construction*. All installation and construction shall conform to the approved engineering drawings. However, if the developer chooses to make minor modifications in design and/or specifications during construction, he/she shall make such changes at his/her own risk, without any assurance that the City will approve the completed installation or construction. It shall be the responsibility of the developer to notify the City of any changes from the approved drawings. The developer may be required to correct the installed improvement so as to conform to the approved engineering drawings.

I. *As-Built Drawings*. The developer shall submit to the ~~City Planner at least five (5) sets of~~**BUILDS Department** "as-built" engineering drawings of the required improvements that have been completed. **Said drawings will consist of all original plan sheets and show the distinct changes that took place during construction. As-Built Drawings will also be required as digital drawing (dwg) files, portable document files (pdf) and/or may be required in another digital format at the BUILDS Department staff's discretion.** The Project Engineer shall certify each set of drawings in accordance with the requirements of Section **410.360**.

410.215 Construction Plans

A. The construction plan for all aspects of the site development shall be prepared by a qualified **P**~~p~~rofessional **E**~~e~~ngineer, registered in the State of Missouri. **The construction plans shall be significantly based on the configuration shown on the approved Preliminary Plat.** ~~Five (5)~~**Three (3)** copies **and a digital copy** shall be submitted for review to the ~~Public Works Director~~**BUILDS Department**. The construction plan shall be any scale ~~from one (1) inch equals ten (10) feet through one (1) inch equals fifty (50) feet,~~ so long as the scale is an increment of ten (10) feet and is sufficiently clear in reflecting details of the proposed construction. Construction plans shall be prepared on exhibits twenty-four (24) inches by thirty-six (36) inches and shall be **bound** ~~by staple on one (1) side~~. All plan sheets shall be prepared to a degree to allow for adequate review and construction. Each page shall contain an approval block for approval from the City of Republic

~~Public Works Department~~. The City may require additional details to be developed to establish clarity for review and construction. The plans shall generally consist of the following:

1. Title (cover) page containing, but not limited to, the following: owner's and developer's name, engineer of record, name of project, table of contents **with page numbers**, general rules of construction, phone numbers of utility suppliers and a record of submittals and approval blocks.
2. Street plans, sidewalk plans and profile sheets containing, but not limited to, the following:
    a. Pavement installation, widening or resurfacing improvements dimensioned and developed in accordance with the standard typical section applicable to the project;
    b. Top of pavement mathematical profile grade elevations at twenty-five (25) feet intervals on vertical curves and fifty (50) feet intervals on tangent sections for all roadway construction. Top back of curb elevations at twenty-five (25) foot intervals for all horizontal curves, at thirty-degree (30°) intervals for street intersections and cul-de-sacs. Existing vertical curve elevations shall be shown at points of extension at intervals of twenty-five (25) feet. Existing vertical curve elevations shall be shown at points of extension at intervals of twenty-five (25) feet. PC and PT elevations shall be indicated at all curves and intersections;
    c. Resurfacing profile grade elevations on existing centerline and edges of pavement at twenty-five (25) feet intervals and breaks in grade (i.e. irregularities in pavement) and establish new centerline and edge of pavement profiles; and
    d. Existing and proposed grades at the centerline and left and right back of curb.
3. Pavement striping, marking and signage plan containing, but not limited to, the following:
    a. Location, type of markings and signage prescribed;
    b. The type of materials used; and
    c. The method for installation. The plan shall be based and designed on the Manual on Uniform Traffic Control Devices.
4. Grading, erosion and sediment control plan containing, but not limited to, the following:
    a. Finished contours shall be shown to the limits of the project **for the entire site**, establishing the desired (planned) flow of all on-site stormwater in connection with planned streets, sidewalks, stormwater ditches, pipes and structures; and
    b. Location and composition of silt fences, construction entrances, catch basins and related temporary structures and devices to prevent erosion, siltation and nuisances to adjacent properties, storm sewers and streets**, and a delineation showing limits of disurbance**.
5. Sanitary sewer plans and profile sheets containing, but not limited to, the following:
    a. Profiles establishing the class and size of pipe, invert elevations, grade, distance between manholes and minimum distance from other proposed or existing utilities. Profile sheets shall accurately depict the elevation, size and material type of intersecting proposed or existing utilities;
    b. Plans establishing the exact location, class and size of service lines; and
    c. Plan and profiles establishing lift stations and related components of the system. Site development details and requirements shall be provided and referenced in accordance with the **Standard Specifications and Details for Water and Sewer Construction**~~Construction Specifications for Public Improvements~~.
6. Water plans containing, but not limited to, the following:

a. Plan view of the proposed system, including class of pipe and size in relation to the back of curb, including fire hydrants, gate valves, blow-off assemblies, service lines and meter pits, etc.; and
b. Profile drawings~~, submitted at the discretion of the City, shall~~ accurately depicting the elevation, size and material type of intersecting proposed or existing utilities.

7. Additional submittals containing, but not limited to, the following forms, documents and exhibits intending to parallel the provisions of the Missouri Department of Natural Resources including specific information for determining the most efficient and cost-effective manner in which to extend public utilities:
    a. A copy of the application for the Missouri Department of Natural Resources Request for Extension of Sanitary Sewer and Public Drinking Water. The completed and executed document shall be retained by the City;
    b. Sanitary sewer engineering report containing a letter of transmittal from the design engineer summarizing the facilities, a discussion on the design criteria and assumptions used, hydraulic and BOD loading calculations, an opinion as to the conformity of the proposed sewer extension with the City of Republic Master Plan and discussion on facility sizing in regard~~s~~ to future development. If a lift station is proposed, the engineering report shall include a feasibility study for alternative facilities (gravity sewer) and the potential for retirement of the proposed lift station;
    c. Water engineering report containing a letter of transmittal from the design engineer summarizing the facilities, a discussion on the design criteria and assumptions used, a hydraulic analysis demonstrating domestic and fire flow conditions, an opinion as to the conformity of the proposed extension with the City of Republic Water Master Plan and discussion on facility sizing in regard~~s~~ to future development;
    d. Easements for all proposed **drainage**, sewer and water extensions located outside **previously existing** easements **or right-of-way**, to be dedicated via a final plat, must be accompanied by draft instruments for the formal dedication of temporary construction and permanent easements. Depending upon the number of land-owners and the complexity of the proposed sewer extension, the City may require a property owner's exhibit accompanied by an opinion of title as issued by a recognized title company; and
    e. Cost estimate indicating an engineer's statement of probable cost for the construction of the proposed main extension. If a sewer lift station or water pressure control facilities are proposed, estimated operating costs for ten (10) years shall be included.
8. Storm drainage, storm sewer plan and profile sheet containing, but not limited to, the following:
    a. Drainage plans indicating all existing and proposed storm sewer lines, inlet boxes, manholes, basins, swales, watercourses, culverts and other underground or at-grade structures in the vicinity of construction and immediately adjacent thereto. Pipe classes, sizes, grades, inverts, box openings and related structure details shall also be established and indicated on the plan sheets; and
    b. Grading details pertaining to site development shall be shown in plan or on cross-section sheets. Details shall be shown with respect to existing and proposed contours, normally at two (2) foot intervals.

9. Detention plan containing, but not limited to, the following: detention plans, elevations, dimensions, weir elevations and cross-sections, low-flow channels, pipe sizes, discharge and dissipation structures.
10. *Record drawings*. One (1) record copy of all drawings, specifications and addenda addressing public improvements shall be maintained by the developer's contractor and by the City's Construction Inspector in good order and annotated to show all changes made during construction. Upon completion of the work, these record documents will be delivered to the engineer of record who shall provide ~~copies of these documents, to include reproducible copies and electronic copies~~**As-Built Plans as a digital copy (in pdf), and a drawing file (dwg)** or **other approved format of** digital CAD files of the revised drawings, to the City at no cost.

410.220 Inspection And Acceptance Of Subdivision Improvements

A. *Certification By Project Engineer*. In accordance with the ~~"Construction Specifications for Public Improvements"~~ **"Standard Specifications and Details for Water and Sewer Construction", and the "Stormwater Management and Design Criteria Manual",** all improvements required by this Chapter shall be inspected by the developer's engineer, or his/her agent, and certified in writing to the City as having been completed, except for improvements made under jurisdiction of other public agencies, in which case engineers or inspectors of each agency will make the necessary inspections. Where inspections are made by other agencies, the Engineer shall be given written reports of each final inspection.
B. *Inspection By The City.* In addition to inspection and certification by the Project Engineer, the City shall provide inspection of all phases of construction to field verify that the location of all infrastructure installed are in coordination with submitted as-built plans.
C. *Compliance With Standards*. The developer shall bear the final responsibility for the plans, construction drawings and the installation, construction and inspection of all required improvements according to provisions of this Chapter and to standards and specifications of ~~various~~**applicable** public agencies.
D. *Acceptance*. Approval of installation and construction of improvements by the Project Engineer shall not constitute acceptance by the City of the improvements for dedication purposes. Acceptance shall be established by approval of all related City departments and the approval by all outside public agencies, including, but not limited to, County, State or Federal Governments.
E. *Site Cleanup*. The developer shall be responsible for removal of all equipment, material and general construction debris from the subdivision and from any lot, street or public way or therein or adjacent thereto. Dumping such debris into sewers, adjacent property or other land in the City is also prohibited. Burning of debris is prohibited unless a permit is obtained from the MoDNR.

Article 410-V Major Subdivision -- Final Plat

410.230 Application For Final Plat

The developer shall submit a completed application and applicable fees as provided for in the fee schedule found in Section 805.050, a completed Final Plat checklist, final inspection fees, sign installation fee, **a digital copy**, and a minimum of **three**~~five~~ (**3**~~5~~) copies of the proposed Final Plat or more, as required by ~~the City Planner~~**BUILDS Department staff**, to the **BUILDS Department** ~~Republic Community Development Department~~ at least twenty (20) working days prior to the meeting of the City Council at which the plat is to be considered for approval. ~~A Final Plat and application shall not be accepted for review after the two-year anniversary date of the City Council's Preliminary Plat approval.~~

410.240 Review Procedures

The ~~City Planner~~**BUILDS Department** shall determine if the submittal is complete, and if so, transmit the same to the City Clerk in adequate time for inclusion on the agenda for the **City** Council's next meeting. If the ~~City Planner, Community Development Director or City Engineer~~**BUILDS Department staff** reviews the application and plat and finds that it is incomplete or that the Minimum Required Improvements are not completed, then ~~City Planner~~**BUILDS Department staff** shall so notify the applicant in writing and shall note any deficiencies. Once all deficiencies have been addressed and the final plat is signed by the owner, sealed by the surveyor of record and all others required herein, the plat will be forwarded to the City Council for approval by general ordinance, prepared by the City Attorney.

410.250 Minimum Required Improvements

A. The owner or developer is required to have all subdivision improvements, including sidewalks, completed prior to the filing of the final plat. In lieu of the final completion of said improvements before the plat is recorded, the owner or developer ~~or other person~~**shall enter into a Developer's Agreement**~~who agrees~~ with the City to make the public improvements ~~on behalf of the owner or developer may~~**to** post a ~~surety bond with one (1) or more corporate sureties engaged in the business of signing surety bonds in the State of Missouri, an escrow agreement, letter of credit or other appropriate security agreement for certain improvements~~**financial security** with the approval of the ~~City Attorney and the City Administrator~~**City Council** of the City of Republic~~,~~. ~~which surety, escrow agreement or other appropriate security agreement~~**The financial security** will insure to the City that the improvements will be completed by the owner or developer.

1. Improvements related to ensuring public safety within the development must be completed and accepted prior to the filing of the final plat. All other improvements must be completed within ~~one (1) year after the recording of the final plat~~**the terms of the Developer's Agreement**. The ~~Director of Public Works~~ **BUILDS Administrator, or their designee,** may require that certain improvements such as storm sewers, off-site improvements and basic improvements necessary for the provision of public health and safety be made and refuse to accept security for such improvements when they determine the improvements are necessary for the protection of adjacent property or of the general public. ~~The City may, upon proof of hardship, extend the completion date set forth in said bond or agreements for a maximum period of one (1) additional year; provided a request for said extension is made prior to the end of the one (1) year following recordation and provided the amount of said security is revised pursuant to a revised estimate by the Department of Public Works.~~ The City Attorney and City Administrator, acting in conjunction, may at any time during the period of such bond accept a substitution of principal or sureties on the bond or a substitution of a letter of credit, escrow or other approved security agreement. The amount of the corporate surety bond, escrow agreement or other appropriate security agreement shall not be less than the estimated cost of the improvements, said estimate of cost to be made by the **BUILDS** Department ~~of Public Works~~. The City may defer at the time of final approval, subject to appropriate conditions, the provision of any and all such improvements as, in its judgment, are not appropriate because of incompatible grades, future planning, inadequate or lack of connecting facilities or other reasons. As a condition of deferral, the owner or developer shall pay their share of the costs of the future improvements to the City prior to the signing of the final plat or the owner or developer may post an appropriate security approved in the same manner as stated above which shall insure completion of said deferred improvements upon demand by the City. If the

improvements are not completed within the specified time, the City Council may use the funds from said security, or any necessary portion thereof, to complete the same.

2. The release or reduction of said corporate surety bond, escrow agreement or other appropriate security agreement shall be in accordance with the following:
    a. When a petition for improvements by the tax bill method is filed for the improvements of this Section and when said petition has passed the required remonstrance petition assuring the City that all improvements will be installed, said bond or agreements posted by the owner or developer to insure the City the improvements of this Section may be released and returned to the owner or developer.
    b. The **BUILDS Administrator** ~~Director of Public Works~~ with the approval of the City Administrator, may release or reduce said bond or agreements posted by the owner or developer to insure to the City the improvements of this Section when **they have** ~~he has~~ determined that all required improvements have been satisfactorily completed and the owner or developer's engineer or surveyor has certified to said Administrator, through submission of a detailed "as-built" survey plat of the subdivision indicating location, dimensions, materials and other information required by said Administrator, that the layout of the line and grade of all public improvements are in accordance with construction plans for the subdivision and that the improvements have been completed, are ready for dedication to the local government and are free and clear of any and all liens and encumbrances.
    c. The **BUILDS Administrator** ~~Director of Public Works~~ with the approval of the City Administrator may reduce, upon request, said bond or agreements when he has made the findings and received the information required in the above Subsection **(b)**, but such reduction shall not exceed the ratio that the cost of completed improvements bears to the total estimated cost of total public improvements for the plat.
3. The City, its boards, commission and agents shall withhold all City improvements or services of whatsoever nature, including the furnishing of sewer, water, electricity and gas, from all additions which have not been approved as provided by these regulations; and further, no permits shall be issued by the **BUILDS** ~~Community Development~~ Department of the City of Republic on any property which has not been approved as provided by these regulations.
4. Provided however, the improvements and permits withheld above shall not be withheld by reason of the conditions therein stated when the City finds the improvements are necessary to comply with other ordinances of the City of Republic which carry a penalty for failure to comply~~.~~

410.260 Effect Of Final Plat Approval

Final Plat approval shall confer upon the developer the conditional right that the City Council will not change the general terms and conditions under which the approval was granted. Approval of the Final Plat, by general ordinance, and the subsequent recording of the Final Plat shall constitute the subdivision of the property into lots and the creation and dedication of right-of-way and utility easements.

410.270 Monuments

A. All monuments shall be set in the ground at least to the depth of the minimum length given, unless they are encased in concrete. The precise position of corner monuments shall be marked by a point on a cap and the cap inscribed with the registration number o–f the land surveyor responsible for placement or the corporate registration number or name of the company. Monumentation shall comply with the following at a minimum.
    1. *Permanent monuments*. Two (2) permanent monuments per subdivision block, adjacent to or located in the right-of-way.
        a. Minimum diameter of five-eights (5/8) inch by twenty-four (24) inches length, steel or coated steel rebar or similar bar.
        b. Monuments shall have a permanently attached cap of the same or of a dissimilar metal if the metals are insulated with a plastic insert to reduce corrosion.
    2. *Semi-permanent monuments*. Located at each lot corner of each platted lot in the subdivision.
        a. Minimum diameter of one-half (1/2) inch by eighteen (18) inches in length, steel or coated steel rebar or similar bar.
        b. Monuments shall have a plastic or aluminum cap.
    3. ~~*Elevation markers*~~***Benchmarks***. For subdivisions platted in the vicinity of floodplains, ponds, lakes, creeks and other major drainage features, a permanent **benchmark** ~~elevation marker~~ shall be established at location(s) required by the City to reference and verify minimum finished floor elevations **as published on the As-Built Plans**.

410.280 Existing Or Proposed Features To Be Shown On The Final Plat

A. Prior to approval of the Final Plat, the ~~City Planner and the City Engineer~~**BUILDS Department** shall review the Final Plat for conformance to the Preliminary Plat and to determine that the plat shows or establishes the following information, which shall be in substantial conformity to the Preliminary Plat.
    1. *Name and code*. The name of the subdivision, phase or addition as provided on the Preliminary Plat.
    2. *Date of preliminary plat approval*. The date and name in which the Preliminary Plat was approved as shall be indicated on the Final Plat. In addition, any ordinance, resolution or other bill passed by the City Council or Planning and Zoning Commission that relates to the subdivision or particular phase, shall be included on the plat.
    3. *Owners of record*. The names and addresses of the owner(s) of record, developer(s), engineer, **and**/or surveyor responsible for the subdivision design.
    4. *Vicinity map*. A vicinity map at a scale of four hundred (400) feet or more to the inch shall be drawn on the **Final** ~~preliminary~~ **P**lat. The map shall indicate:
        a. Section, Township, Range.
        b. Adjacent City limits, other corporation or ad hoc district lines, such as school or sewer districts, etc.
        c. The nearest existing highways or thoroughfares, streets and alleys in neighboring subdivisions or unplatted property.
    5. *Abutting owners*. The name of adjacent subdivisions and the names of record owners of adjacent parcels of unplatted land.
    6. *Boundary lines*. The boundary lines, accurate in scale, of the tract to be subdivided.

7. *Streets — other features*. The location, widths and names of all existing or platted streets, right-of-way or other public ways within or adjacent to the tract, and other important features such as watercourses; railroad lines; corporation and township lines, utility lines, etc.
8. *Proposed design — street, drainage, etc*.
    a. The layout, names and widths of right-of-way, streets, alleys and easements serving stormwater, sewer, water or other utilities within the property being subdivided.
    b. **Where additional right of way is required along an existing road, new right of way line(s) shall be based off of section or other adjacent aliquot part line rather than centerline of road splits.**
    c. **Exemptions or modifications may be made by the BUILDS Administrator or their designee.**
9. *Proposed layout and legal description*. The legal description of the entire site to be subdivided, including ~~approximate~~ acreage in tract**,** ~~,~~ **The** boundary **and easement** line~~s~~, location**s**~~,and~~ dimensions**, and bearings** of newly created tracts, parcels or lots that are part of the subdivision shall be shown on plat. The dimensions and location of all arcs, radii, ~~internal angles,~~ points of curvature and tangent boundaries and other pertinent survey information necessary ~~to~~ **for** an accurate description and location. Survey data shall meet **all applicable portions of the current Missouri Standards for Property Boundary Surveys as promulgated by the Department of Agriculture, Division of Weights, Measures and Consumer Protection.** ~~the standards promulgated by the State of Missouri, "Missouri Minimum Standards for Property Boundary Surveys", Division of Geology and Land Survey, Missouri Department of Natural Resources.~~ All survey datum shall be vertically **tied to the NAVD 88 datum** and **shall graphically show a horizontal tie to two subdivision corners by bearing and distance from the nearest published GRS monument which name and/or designation number, date of adjustment and coordinates shall be noted. If the MoDOT Real Time Network is used in lieu of a GRS monument, then a statement to that effect shall be noted along with the Epoch of subdivision control. Also State Plane Coordinates of at least two external boundary corners of subdivision shall be shown.** ~~horizontally tied to the City of Republic Geographical Reference Stations (GRS).~~
10. ~~*Curvature and radius*~~***Curve Data***. When a **boundary, easement, lot, or** street is on a circular curve, the ~~main chord of the~~ centerline **data shall be shown in place or on an included Curve Table. Curve data shown shall consist of at least the following; Curve number/name if table is used; Delta or central angle; Radius; Arc length; Chord length and bearing.**
    a. **When curved lot lines are concentric to the centerline of street it shall be noted as such on plat.**
    b. **Non-tangent curves shall be noted in place or in Curve Table and shall show Central Angle rather than Delta; Bearing from radius point to point of curvature and all other curve components mentioned above.** ~~shall be drawn as a dotted line in its proper place; and either in it or in an adjoining table, the bearing and length shall be noted; the radius of the circle of which the curve is a part; the central angle subtended; the bearing of the radius at the point of curve; and the chord length and deflection angles used in staking out the survey. The lot lines on the street sides may be shown in the same manner or by bearings and distances. When a curve of two hundred (200) feet radius or less is~~

~~used, it is sufficient to show the length and bearing of the main chords, the radius at one (1) end of the curve, and the central subtended.~~

11. *Lot information*. The plat shall indicate the area, proposed setbacks**, proposed and existing easements**, and exact location and distance of all structures and other physical improvements in relation to proposed lot lines.
12. *Zoning*. Zoning boundary lines and proposed use of property.
13. *North point, etc*. Title, **bar** scale, north arrow, **basis of bearing,** date of preparation**,** and date of each successive revision.
14. *Floodplains, etc*. The extent and location of floodplains, floodways or other waterways of record; elevations of which, shall be based on applicable Flood Insurance Studies, Flood Insurance Rate Maps, Flood Boundary and Floodway Maps.
15. *Location of model home*. The location of the model home or spec. house, if applicable, as it occupies a platted lot in the subdivision.
16. *Commercial and industrial subdivisions*. Final Plats ~~for industrial or commercial subdivisions~~ shall delineate who will be responsible for addressing open space, landscaping and buffer yard requirements.
17. *Notes and related information*. Notes pertaining to particular items such as:
    a. Access limitations;
    b. Total area;
    c. Total number of lots;
    d. Smallest/largest lot;
    e. Replat information;
    f. Source of title;
    g. Recording information for covenants and restrictions.

~~18. *Minimum finished floor elevations:* provide in a table or by other means, minimum finished floor elevations for each lot created by the subdivision, typically 1 ft above top of curb height directly adjacent.~~

19. *Sinkholes*. The extent and location of sinkholes must be shown, the location of which shall be based on the latest data from the Greene County Assessor's Department, a report conducted by a Geotechnical Engineer, or a source approved by the BUILDS Department Administrator or their designee. Any sinkhole and its associated thirty-foot "No Build" buffer zone must be entirely contained within a common lot.

20. *Dedications of Off Site Right of Way and Easements to the City* All right of way for streets and easements for proposed drainage, sewer and water extensions located outside existing easements or right-of-way, shall be dedicated to the City via formal legal instruments. This shall include dedication for streets, temporary construction, and permanent easements and shall be shown and or noted on Final Plat. Depending upon the number of landowners and the complexity of the proposed street or utility extensions the City may require a property owner's exhibit accompanied by an opinion of title as issued by a recognized title company.

410.290 Professional~~Registered~~ Land Surveyor's Certificate

A certification shall be included on the plat by a ~~registered~~Professional ~~l~~Land ~~s~~Surveyor to the effect that the plat represents a survey made by him/her, and that the locations of all required survey monuments~~, installed or to be installed,~~ are correctly shown thereon. The months and year during which the survey was made shall be shown. The certification block shall substantially conform to the following.

That I, _____do hereby declare that this plat was prepared under my supervision from an actual survey of the land herein described prepared by _____ dated _____ and signed by _____ P.L.S. No. _____ and that the corner monuments and lot corner pins shown herein were placed under the personal supervision of _____ P.L.S. No. _____ in accordance **all applicable portions of the current Missouri Standards for Property Boundary Surveys as promulgated by the Department of Agriculture, Division of Weights, Measures and Consumer Protection.** ~~with the Division of Geology and Land Survey, Missouri Department of Natural Resource's "Current Missouri Minimum Standards for Property Boundary Surveys as Promulgated by the Missouri Department of Natural Resources".~~

Date Prepared: _____

Signature: _____

Missouri Professional Land Surveyor No.: _____

Date: _____

410.300 Owner's Certificate

A signed statement, substantially conforming to the following shall be included on the plat, which certifies that he/she had title to the land being subdivided and all access rights as represented on the plat are hereby dedicated. This certification block shall include a notary blank.

OWNER(S) DEDICATION

As owner(s) I/We, Owner(s) Name have caused the land described on this plat to be surveyed, divided, mapped, and all access rights reserved and dedicated as represented on the plat. I/We hereby dedicate, grant, and convey right-of-way and easements shown hereon to the City of Republic. Furthermore, I/We, certify that there are no suits, actions, liens, or trusts on the property conveyed herein, and warrant generally and specially the property conveyed for public use and will execute such further assurances as may be required.

_____

Name of Owner(s) and/or Subdivider

Date: _____

410.310 Certificate Of Taxes Paid

The plat shall contain a certification block for the City and County Official to the effect that there are no unpaid taxes and unpaid special assessments due and payable at the time of plat approval. The certification block shall substantially conform to the following:

CERTIFICATE OF TAXES PAID There are no unpaid taxes due and payable at the time of plat approval and no unpaid special assessments, whether or not due and payable at the time of plat approval on any of the lands included in this plat, and all outstanding taxes and special assessments have been paid on all property dedicated to public use.

_____

Parcel Number

_____

County Collection Official

_____
Date

410.320 City Council Certificate
A statement of approval by the City Council indicating the date and ordinance number in which Final Plat was accepted and approved. The certification block shall substantially conform to the following.

APPROVAL BY THE CITY COUNCIL

I, , City Clerk of the City of Republic, Greene County, Missouri, Do hereby certify that the Plat of _____ was presented to, accepted and approved by the City Council of said City of Republic, and approved by General Ordinance No. _____on the _____day of _____, 20_____.

_____
City Clerk

_____
Date

410.330 Compliance With Land Use Regulations Certification, Certificate Of Compliance With Zoning And Subdivision Regulations
The Plat shall include a signature block establishing conformance to the Land Use Regulations adopted by the City of Republic.

CERTIFICATE OF COMPLIANCE WITH ZONING AND SUBDIVISION REGULATIONS I, _____, City Planner of the City of Republic, Missouri, do hereby certify on the _____ day of _____, 20____, the Final Plat of _____ _____ conforms to the City of Republic Land Use Regulations, in accordance with Title IV of the Republic Code of Ordinances.

410.340 Recorder's Office
A title block shall be included on the plat for the Office of the Recorder of Deeds, Greene County, Missouri substantially conforming to the following.

IN THE RECORDER'S OFFICE I, _____, Recorder of Deeds, Greene County, Missouri, do hereby certify that the within instrument of writing was on the day of_____, 20 , duly filed for record and is recorded in the records in this office in book _____ page _____in testimony whereof, I have hereunto set my hand and affixed my official seal at my office in Springfield, Missouri, this _____day of _____, 20_____.

_____
Recorder of Deeds

_____
Date

410.350 Final Submittal

A. Final submittal of the Final Plat shall be prepared on two (2) reproducible original (mylars) 24" X 36" or those dimensions required by the County Recorder of Deeds. The following shall be submitted in addition to the original.

~~1. Sixteen (16) inches X twenty four (24) inches scaled reproducible mylar for the City's plat book.~~
~~2. Six (6) blue line copies (24" X 36"). The developer may submit more than the required minimum of blue line copies.~~

1. ~~3.~~ All off-site easements and right-of-way deeds.
2. ~~4.~~ As-built drawings **as described in 410.210** of the phase being approved.
3. ~~5.~~ Permits, on file, from MoDNR for authorization to connect and place the water and sewer lines in service.
4. ~~6.~~ Copy of private and restrictive covenants to be recorded.
5. ~~7.~~ Electronic copies of the subdivision plat, infrastructure or as-built plans, etc.
6. ~~8.~~ The ~~community development~~ **BUILDS Department** staff may require additional elements to incorporate the final plat to the City map or to supply related government agencies with plats and reproducible prints, as needed.

410.355 Maintenance After Approval

The developer shall maintain and keep in repair all public infrastructure and detention areas for a period of one (1) year from the date the constructed improvements are approved by the City. To guarantee this maintenance, an acceptable maintenance bond, letter of credit or other acceptable security shall be provided in the amount of ten percent (10%) of the contract price of the improvements against defects in workmanship and materials for the above-mentioned one (1) year period. The bond, letter of credit or security shall be filed with the City and be from a surety company licensed to do business in the State of Missouri and in a form to be approved by the City Attorney.

Article 410-VI General Principles Of Design And Minimum Requirements For The Layout Of Subdivision

410.360 Functional Classification Of Streets

As defined in this Chapter, the following terms are used as follows:

EXPRESSWAY
A limited-access highway with some grade crossings and signals at major intersections intended for high-volume, moderate to high speed traffic across the metropolitan area with minimal access to adjacent land.

FREEWAY
A fully controlled access highway with grade-separated interchanges at major thoroughfares. Intended for high-volume, high-speed traffic movement between cities and across the metropolitan area and not intended to provide direct access to adjacent land.

PRIMARY ARTERIAL
A street primarily intended to provide for high-volume, moderate-speed traffic from one part of the City to another or between major activity centers. Providing access to abutting property is a secondary function and access points should be controlled.

SECONDARY ARTERIAL
A street which supplements and feeds the principal arterial system and is intended for moderate-volume, moderate-speed traffic. Access to abutting property is a secondary function and access points should be partially controlled.

COLLECTOR
A street which collects and distributes traffic to and from Local Streets and Arterial Streets. Collector Streets are intended for moderate volume, low speed and short length through trips. The main function of a Collector Street is to move traffic from Local Streets to the Arterial System. A secondary function of a Collector Street is to provide access to Local Streets.

LOCAL STREET
A street intended to provide access to abutting property while its secondary function is to provide traffic flow and movement. Local Streets, which comprise the largest percentage of total City street mileage, are designed for low-volume, low-speed traffic. ~~During the platting process a Local Street may be designated as a Local-Commercial, Local-High-density residential or Local-Low-density residential street, depending upon the predominant land use it will serve.~~

410.370 Design Standards -- Streets And Sidewalks

A. Streets shall be designed in accordance with the latest addition of the American Association of State Highway and Transportation Officials (AASHTO) *A Policy on Geometric Design of Highways and Streets.*
B. Sidewalks shall be 5' minimum width and conform to the latest standards identified by the American's with Disabilities Act (ADA).

410.380 Street Grades And Curves

A. The grades of streets shall not exceed the following except that, where unusual or exceptional conditions exist, the Planning Commission may modify these requirements:
    1. *Arterials.* Five percent (5%) maximum.
    2. *Collector streets*. Seven percent (7%) maximum.
    3. *Local streets, service drives and alleys*. Ten percent (10%).
    4. *Pedestrian ways or crosswalks*. Twelve percent (12%), unless steps of an acceptable design are to be constructed.
    5. *Minimum grade*. In no event shall the minimum grade of any street be less than seventy-five hundredths percent (.75%) with lengths not to exceed two hundred (200) feet.
    6. *Changes in street grades*. All changes in street grades in excess of one percent (1%) shall be connected by vertical curves of a minimum length equal to fifteen (15) times the algebraic difference in the rate of grade for highways, thoroughfares and parkways; and one-half (½) of this minimum for all other streets.
    7. *Curvature of centerline*. **shall be designed in accordance with AASHTO's *A Policy on Geometric Design of highways and Streets*** ~~The radii of curvature on the centerline shall not be less than the following:~~

        a. ~~*Highways, etc*. Highways, thoroughfares and parkways: four hundred (400) feet.~~
        b. ~~*Local streets, etc*. Local streets, minor streets and service drives: one hundred (100) feet.~~

410.390 Easements To Be Granted To The City

A. Utility easements shall be provided adjacent to all lots and rights-of-way, the following minimum utility easements are required.

1. Utility easements adjacent to right-of-way: ten (10) feet.
2. Easements for off-site utilities: fifteen (15) feet.
3. Easements for all other utilities: fifteen (15) feet.
4. Temporary construction easements: sixty (60) feet.

410.395 Location Of Certain Public Utilities

A. The location of public utility easements shall be compliant with the following requirements:
   1. Proposed public utilities are prohibited in any location the City Engineer determines interferes with the operation or maintenance of any of the City's utility infrastructure or will otherwise interfere with the rights and reasonable convenience of property owners.
   2. Proposed public utilities located in residential subdivisions to be dedicated, owned, and/or maintained by the City of Republic are prohibited in the rear or side yard; exceptions may be granted by the City Engineer if no other alternative is available.

410.400 Access Management

A. *Freeways, Expressways, Primary Arterials*.
   1. When subdividing land, all parcels shall have direct frontage on a dedicated street to obtain access. Access to property via ingress/ egress easements shall not be allowed.
   2. When subdividing land adjacent to Freeways, Expressways and Primary Arterials, direct access from parcels to the arterial shall be prohibited. Access shall be provided to Freeways, Expressways and Primary Arterials via Local Streets, Collector Streets and Secondary Arterial Streets.
   3. If the land adjacent to the Freeway, Expressway or Primary Arterial is zoned for commercial land uses, a Secondary Circulation System shall be constructed according to the Major Thoroughfare Plan to control access and maintain traffic flow. The Secondary Circulation System shall be located at least four hundred forty (440) feet from the highway and run parallel to the highway thus creating reverse frontage lots.
   4. In the case of infill development along Freeways, Expressways and Primary Arterials, where direct access cannot be prevented because of prior platting or existing development patterns, joint access driveways shall be constructed.
   5. In the Site Plan review process, commercial property along Freeways, Expressways and Primary Arterials shall be required to construct Internal Circulation Systems between parcels to provide access management to the Arterial Street.

B. *Collector Streets And Secondary Arterial Streets*.
   1. When subdividing land adjacent to Secondary Arterial Streets and Collector Streets, direct access from parcels to the arterial or collector shall be prohibited.
   2. If the land adjacent to the Collector Street or Secondary Arterial Street is zoned for commercial land uses, a Secondary Circulation System shall be constructed according to the Major Thoroughfare Plan to control access and maintain traffic flow. The Secondary Circulation System shall be located at least two hundred twenty (220) feet from a Secondary Arterial and one hundred twenty (120) feet from a Collector and shall run parallel to the highway thus creating reverse frontage lots.
   3. In the case of infill development where direct access cannot be prevented because of prior platting or existing development patterns, the construction of turnaround drives shall be provided.

C. Access Restrictions by Classification of Roadway

1. **All Distances are centerline-to-centerline. If roadway is owned/operated by another Authority Having Jurisdiction (AHJ) then follow their access spacing guidelines.**
    a. **Collector**
        (1) **Full access roadway intersections spacing shall be a minimum distance of 660'**
        (2) **Commercial driveway spacing shall be a minimum distance of 160'**
    b. **Secondary Arterial**
        (1) **Full access roadway intersections spacing shall be a minimum distance of 660'**
        (2) **Commercial driveway spacing shall be a minimum distance of 210'**
    c. **Primary Arterial**
        (1) **Full access roadway intersections spacing shall be a minimum distance of 1/4 mile.**
        (2) **Commercial driveway spacing shall be a minimum distance of 330'**

410.410 Street Layout

The street layout of the subdivision shall be in conformity with the adopted Transportation Plan. The design and arrangement of streets in the subdivision shall provide for the continuation of streets in adjacent subdivisions, where such extension is not prohibited by topographic conditions. Local Streets shall be laid out so as to discourage their use by through traffic. Streets shall be arranged in proper relation to topography so as to result in usable lots and safe and reasonable grades, both for the streets and driveways intersecting therewith.

410.420 Intersections

Proposed Collector Streets and Secondary Arterial Streets shall intersect one another at ninety-degrees (90°). The street centerline shall never be less than eighty-five degrees (85°) when a Collector Street or Secondary Arterial Street is involved. The street centerline should never be less than eighty degrees (80°) when a Local Street is involved. Four-way intersections shall be created for minor interior streets. Street jogs with centerline offsets of less than one hundred twenty-five (125) feet shall be prohibited on all types of streets.

410.430 Private Roads And Gated Developments

A. The Planning and Zoning Commission and the City Council may approve a plan or plat for a gated/private development if the proposal is found to meet acceptable planning and design guidelines and shall furthermore meet the following:
    1. The proposed development shall not adversely affect **the adopted Major Thoroughfare Plan**, existing or planned neighborhoods, rights-of-way, and/**or** public infrastructure.
    2. The proposal must provide adequate information relating to restrictive covenants, bylaws and contingencies to ensure the development will be sustainable and self sufficient.
    3. Private or gated developments shall meet the general principles of design and minimum requirements for the layout of subdivision in the City of Republic; all improvements shall be constructed to City standards.

410.440 Blocks

A. The length of blocks in a subdivision shall be designed to be more than five hundred (500) feet and shall not exceed one thousand five hundred (1,500) feet as measured from centerlines of streets.
B. The width of blocks in a subdivision shall be designed to provide two (2) tiers of lots, except where the lots back onto a major street, natural feature, subdivision boundary or other feature or facility that requires reverse frontage.

410.450 Dead-End Streets And Cul-De-Sacs

A. Except as otherwise provided herein, temporary dead-end streets shall be approved where the layout of the subdivision requires streets to be built to property lines for future development of the street system. A temporary cul-de-sac will be required on roads more than one hundred fifty (150) feet in length. When the staging of development allows the developer to stage the construction of streets in the development.
B. Dead-end streets of reasonable length (normally not over five hundred (500) feet) may be approved where necessitated by topography or where, in the opinion of the ~~Planning and Zoning Commission~~**BUILDS Administrator or their designee**, they are appropriate for the type of development contemplated. At the end of all said streets, cul-de-sacs shall be built.
C. Cul-de-sac streets may be allowed if the street does not exceed five hundred (500) feet in length measured from the centerlines and the closed end shall have a turnaround encompassing a minimum right-of-way diameter of one hundred (100) feet.
D. Sidewalks constructed on dead-end streets shall be extended to the end of the street and around the entire radius of the cul-de-sac.

410.460 Street To Extend To Boundary Lines

A. Proposed streets shall be extended to the boundary lines of the tract to be subdivided, unless prevented by topography or other physical conditions or unless, in the opinion of the Planning and Zoning Commission, such extension is not necessary or desirable for the future development of adjacent tracts.
B. Where appropriate to the design, proposed streets shall be continuous and in alignment with existing, planned or platted streets with which they are to connect. It is not the intent of these regulations to require that streets be designed in a grid-fashion. Streets shall be designed to accommodate natural obstacles, such as known sinkholes, floodplains, pipelines, streams or other waterways.
C. Local streets shall connect with surrounding streets where necessary to permit the convenient movement of traffic between residential neighborhoods or to facilitate access to neighborhoods by emergency service vehicles or for other sufficient reasons, but connections shall not be permitted where the effect would be to encourage the use of such streets by substantial through traffic.

410.470 Sidewalks And Greenways

A. Unless otherwise approved, sidewalks shall be **5 feet in width and** required on both sides of all existing and new Secondary Arterial Streets and Collector Streets and one (1) side of all existing and new Local Streets, with the following exception:
   1. The ~~Planning and Zoning Commission~~**BUILDS Administrator or their designee** may deem it unnecessary to require sidewalks on interior streets in industrial subdivisions.

B. The ~~Planning and Zoning Commission~~**City's Adopted Plans** may require greenways along Secondary Arterials ~~according to the City's Transportation Plan~~.

410.480 Water Supply

A. Where a public water supply main is reasonably accessible, in the judgment of the Planning and Zoning Commission, the subdivision shall be provided with a looped water distribution system adequate to serve the area being platted, including a connection for each lot and appropriately spaced fire hydrants, in accordance with requirements set out below and in conformance with ~~"Construction Specifications for Public Improvements, City of Republic"~~**"Standard Specifications and Details for Water and Sewer Construction, City of Republic, Missouri"** on file at the offices of the City of Republic ~~Public Works~~ **BUILDS** Department and incorporated herein by reference. All water system plans shall be designed and installed in accordance with the City's Water System Master Plan. Main extensions, upgrades and related looping required by the plan shall be done so at the expense of the developer.

B. The minimum size of a water main ~~providing fire protection and serving fire hydrants~~ shall be six (6) inches in diameter. Larger mains shall be required, if necessary, to allow withdrawal of the required fire flow while maintaining the minimum residual pressure of twenty (20) pounds per square inch throughout the distribution system or to conform to the City's Water System Master Plan. ~~Mains not providing fire protection shall be no smaller than two (2) inches in diameter.~~ All mains shall be extended to adjacent property lines for future extension and looping.

C. *Fire Hydrants*.
   1. Fire hydrants should be located in accordance with National Fire Protection guidelines in reference to fire flow requirements in heavy use areas and residential but shall be placed not more than five hundred (500) feet apart in heavy residential areas and not more than three hundred (300) feet apart in heavy business areas.
   2. Fire hydrants located in heavy traffic areas, such as alleys or parking lots, shall be provided with protection against collision.
   3. Fire Hydrants shall be painted "safety yellow".

410.490 Bridges And Culverts -- Closed Storm Sewers

A. *Bridges And Culverts*. Bridges, box culverts or concrete pipe culverts shall be provided where continuous streets or alleys cross watercourses in accordance with the design requirements of ~~Section 410.650. Each structure shall be designed to carry H-20 loadings~~**the Adopted Plans of the City** using construction materials and installation procedures conforming with ~~"Construction Specifications for Public Improvements, City of Republic"~~**"Standard Specifications and Details for Water and Sewer Construction" and the "Stormwater Management and Design Criteria Manual",** on file at the offices of the City of Republic ~~Public Works~~ **BUILDS** Department and incorporated herein by reference.

B. *Closed Storm Sewers*.

1. Closed storm sewers shall be designed ~~for H-20 loadings and shall conform with "Construction Specifications for Public Improvements, City of Republic"~~**in accordance and shall conform to the Adopted Plans of the City** on file at the offices of the City of Republic ~~Public Works~~ **BUILDS** Department and incorporated herein by reference.
2. Closed storm sewers shall be designed at and constructed to grades such that the velocity therein shall not be less than three (3) feet per second nor greater than twelve (12) feet per second **during rain events**.
3. Closed storm sewers shall extend to the furthest downstream point of development with consideration given to velocities and to providing discharge energy dissipaters to prevent erosion and scouring along downstream properties.

410.500 Public Sanitary Sewer

Where a public sanitary sewer main is reasonably accessible, in the opinion of the Planning Commission, the subdivision shall be provided with a complete sanitary sewer system connected with such sewer mains, at a grade not less than one-half of one percent (.5%)**, unless approved by the City Engineer,** including a lateral connection for each lot. The sewer system shall be designed to extend to adjacent property lines for future development. Such system and connection shall comply with the regulations of the Missouri Department of Natural Resources and to the regulations established by the City of Republic.

~~**410.510 Subdivision Sanitary Sewer**~~

~~Where a public sanitary sewer system is not reasonably accessible, in the opinion of the Planning and Zoning Commission, but where plans for the installation of sanitary sewers in the vicinity of the subdivision have been prepared and approved by the Missouri State Water Pollution Board, the developer shall install sewers in conformity with such plans. Where immediate connection is not possible and until such connection with the sewer system in the district can be made, the use of private sewage treatment facilities may be permitted, provided such disposal facilities are installed and maintained in accordance with the regulations and requirements of the State Water Pollution Board and approved by the City of Republic.~~

410.520 Private Sewage Collection

Where no sewers are accessible and no plans for a sewer system have been prepared and approved, the developer shall either install a sewage collection and disposal system in accordance with the requirements of ~~Title VII: Utilities and/or~~**the City of Republic and** the latest adopted Building Code.

410.530 Planting

All landscaped strips, parkways and screening areas dedicated to the public shall be graded, seeded and planted and maintained in accordance with City regulations. Where shrubs are required for the purpose of screening, location, specimen, density and other pertinent features shall be in accordance with the City's regulations.

410.540 Street Name Signs

All informational and regulatory signs, including, but not limited to, street name signs, stop signs, etc., shall be installed in accordance with the regulations of the ***Manual on Uniform Traffic Control Devices*** **(MUTCD) and** City of Republic at the expense of the developer.

410.550 Utility Service

Where practical, easements for underground conduits for utility lines shall be provided along front, rear and side lot lines. All utilities, including, but not limited to, electricity, telephone and cable television, shall be buried underground for all major subdivisions.

410.560 Property Corner And Boundary Monumentation

Property monumentation and for permanent and semi-permanent monuments shall comply with the **current** Missouri ~~Minimum~~ Standards for Property Boundary Surveys.

410.570 Final Cleanup Of Developed Lots

The owners and/or developers of all new homes, duplexes, apartments or businesses constructed shall have thirty (30) days from the date of the completion of the structure to get all yards and lots graded and all items of construction removed from said yards and lots within thirty (30) days from the completion of said structure. If the owner and/or developer fails to properly grade and clean the lot and ~~have its~~**receive** approval by the ~~Building Inspector~~**BUILDS Administrator or their designee** ~~for the City of Republic~~, then each and every day after the thirty (30) day period shall be a separate violation of this Chapter and the owner and/or developer shall be subject to a fine of up to one thousand dollars ($1,000.00) for the violation of this Chapter. The ~~Building Inspector~~**BUILDS Administrator or their designee** shall have, in accordance with the latest adopted Building Code, the authority to extend this requirement at ~~his or her~~**their** discretion.

410.580 Street Lights

A. Public street lights on ~~residential~~ **local** streets shall be spaced between two hundred fifty (250) feet and three hundred fifty (350) feet apart, at street intersections and cul-de-sacs. Street light spacing on all roads with a classification of collector or above shall be determined on a case-by-case basis.
B. Wires connecting street lights in new subdivisions shall be buried underground at the expense of the developer and in accordance with Chapter **410** Subdivision Regulations.
C. All poles installed in new subdivisions for the specific purpose of providing on-street lighting **for public streets** shall be composed of concrete, fiberglass, steel, aluminum or other materials not composed of wood.
D. The developer of the subdivision shall bear the expense associated with meeting these standards. These requirements shall apply only to the installation of new street lights in major subdivisions platted after approval of this Code.
E. Once constructed and dedicated to the City, the ~~Director of Public Works~~ **BUILDS Administrator** is authorized to temporarily de-energize any street light until such time as construction is initiated on a new inhabitable structure within one hundred sixty (160) feet of the location of the street light. Street lights at street intersections and cul-de-sacs shall not be de-energized under this provision.

Article 410-VII Stormwater Management For Public And Private Improvements

410.650 General Provisions

A. ~~*Scope.* These design criteria set forth the minimum standards for design of storm drainage facilities on public right-of-way and private property in the City of Republic.~~

A. ~~*B.*~~ *Authority.*
   1. ~~These design criteria and standards set forth herein~~ **The Stormwater Management and Design Criteria Manual** ~~have been~~ **has been** adopted by ~~the Planning and Zoning Commission and~~ the City Council *in accordance with the procedures and authority set forth in the City of Republic*.
   2. Any development or grading begun after the date of passage of these criteria and standards which does not comply with the requirements set forth ~~herein~~ **in The**

Stormwater Management and Design Criteria Manual shall be deemed to be in violation of the requirements established herein; and shall be subject to enforcement measures and penalties set forth in Section **100.220** — General Penalty.

B. ~~*C.*~~ *Interpretations.*

1. Where any of the provisions ~~contained herein~~ may be unclear or ambiguous as they pertain to a particular site or situation, interpretations of the policies, criteria and standards set forth herein shall be made in writing by the **BUILDS Administrator or their designee** ~~Community Development Director~~.
2. Such written interpretations shall be kept on file for future reference for use in similar situations and shall be incorporated in subsequent revisions for the standards, if deemed necessary for general reference.

~~D. *Appeals.*~~

~~1. Where disagreements may arise over the interpretation of the requirements set forth herein, appeals may be made to the City Planner upon written request.~~

~~2. Information and supporting documentation for the appeal shall be submitted with the request. The City Planner shall forward the information to the Public Works Director, Community Development Director or the City Engineer within three (3) calendar days following receipt of the information.~~

C. ~~*E.*~~ *Approvals And Permits Required*.

1. *Grading permit*. Storm drainage facilities may not be constructed or altered without review and approval of the plans by the City and issuance of a Grading Permit by the City for subdivisions or for commercial or other sites.
2. *National Pollutant Discharge Elimination System (NPDES) stormwater permit*.
    a. Provisions of the 1987 Clean Water Act require that certain stormwater discharges obtain an NPDES stormwater permit. In Missouri, these permits are administered by the Missouri Department of Natural Resources **(MDNR)**.
    b. Federal rules for NPDES stormwater discharges are contained in 40 CFR Parts 122, 123 and 124 of the Code of Federal Regulations. State NPDES stormwater regulations are contained in 10 CSR 20-6.200 of the Code of State Regulations. Additional provisions for NPDES stormwater permits for land disturbance activities and information regarding the City of Republic General Permit for land disturbance activities are contained in Section **410.710** of these Criteria.
    c. *"404" Permit*.
        (1) For certain activities, which involve the discharge of dredged or fill materials into the waters of the United States a Department of the Army permit may be required as set forth Section 404 of the Clean Water Act. Rules for 404 permits are contained in 33 CFR Parts 320 through 330 of the Code of Federal Regulations.
        (2) Determination of applicability for Section 404 requirements are generally made by the Kansas City or Little Rock District office of the Corps of Engineers.
        (3) A brochure regarding the Corps of Engineers regulatory program may be obtained from the Corps offices.

D. ~~*F.*~~ *Coordination With Other Jurisdictions*.

1. Where proposed storm drainage facilities are located on property adjoining to other local government jurisdictions design of storm drainage facilities shall include provisions to

receive or discharge stormwater in accordance with the requirements of the adjoining jurisdiction, in addition to meeting City requirements.

2. In these cases ~~two (2) additional sets of~~ plans shall be submitted and will be forwarded to the adjoining jurisdiction for review and comment.
3. No grading or construction of storm drainage facilities may commence without prior notification of the Missouri One Call utility warning system at 1-800-DIG-RITE, as required by law.

E. ~~*G.*~~ *Communications And Correspondence*. Communications and correspondence regarding stormwater plan review, policies, design standards, criteria or drainage complaints shall be directed to ~~the City Planner at the City of Republic, 213 N. Main, Republic, Missouri 65738, Phone: 417-732-3354~~**BUILDS Department staff.**

F. ~~*H.*~~ *Ownership And Maintenance*.

1. *Improvements on public road right-of-way*. Storm drainage improvements on public right-of-way shall, upon acceptance of the constructed improvements, become the property of; and shall be maintained by the City of Republic.
2. *Improvements on private property*.
   - **a.** Storm drainage improvements on private property shall be maintained by the owner of the lot upon which the improvements are located or by the Homeowners' Association for improvements located in common areas. **In such cases as an overland drainage easement is located on a private lot, the area of the drainage easement shall not count toward the minimum square footage required for the lot.**
   - b. All such improvements, which serve a drainage area, shall be located in drainage easement and the public shall have such rights of access to repair or maintain such facilities as set forth in Section **410.680(E)(4)**.

410.660 Stormwater Planning And Design

~~A. *Stormwater Management Goals*. In order to ensure protection of the general health and welfare of the citizens of the City of Republic, planning and design of stormwater management measures shall meet the following goals:~~

~~1. Prevent damage to residential dwellings and other building structures from floodwaters.~~
~~2. Maintain emergency vehicle access to all areas during periods of high water.~~
~~3. Prevent damage to roads, bridges, utilities and other valuable components of the community's infrastructure from damage due to flood waters and erosion.~~
~~4. Prevent degradation of surface and groundwater quality from storm water runoff; preserve and protect quality of the environment; and promote conservation of the City's natural resources.~~
~~5. Minimize floodwater and erosion damage to lawns, recreational facilities and other outdoors improvements.~~
~~6. Minimize traffic hazards from runoff carried in streets and roads.~~
~~7. Comply with applicable State and Federal laws and regulations.~~
~~8. Meet the foregoing goals in a manner which is cost effective and which minimizes the cost of housing and development while encouraging sound development practices.~~
~~9. Encourage innovative and cost effective planning and design of stormwater management facilities.~~

10. Encourage multiple purpose design of stormwater management facilities, to provide opportunities for recreational use and other benefits to the community wherever possible.

The standards and criteria set forth herein provide the minimum standards for planning and design of stormwater facilities. Where a particular plan or design may be found to be in conflict with a specific standard, achievement of the goals set forth above will have precedence.

B. *General Planning And Design Principles*.

1. The City of Republic recognizes that stormwater management is an important component of overall land use planning.
2. The City of Republic further recognizes that proper stormwater planning significantly reduces the long-term costs to the community both in terms of infrastructure cost and property losses due to flood damage. It is much more cost effective to prevent flood damage by proper design and construction, than to repair and remediate problems, which have occurred through poor planning and design.
3. The following general principles must be followed in preparing the grading and storm drainage plans for all development sites:
    a. *Recognize the existing drainage system*. The storm drainage system differs from other utility systems in very important ways:
        (1). There is an existing natural drainage system.
        (2). It is only needed when runoff occurs.
        (3). The capacity of the system varies greatly depending upon how much it rains.
        (4). The system does not have to be constructed of man-made components in order to function.
    b. Because of these characteristics there has been a historic inclination for fragmented planning and design of storm drainage facilities.
    c. Proper planning of storm drainage facilities must begin with the recognition of the existing system, and include necessary provisions for preserving or altering the existing system to meet the needs of proposed development or construction.
    d. Methods of delineating existing watercourses are outlined in Section 410.670.
4. *Allow for increase in runoff rates due to future urbanization*.
    a. As areas urbanize, peak rates of runoff increase significantly. The City of Republic may require temporary detention and storage of increased volumes of urban runoff in order to minimize increases in flow rates as urbanization occurs. However, the cumulative effects of on-site detention are difficult to predict and control and development of comprehensive basin-wide runoff models to determine these effects does not appear likely in the foreseeable future.
    b. For this reason, design of storm drainage improvements must be based upon the assumption of fully urbanized conditions in the area under consideration. No reduction in peak flow rates due to detention, unless an approved runoff model has been developed for the drainage basin under consideration. Any detention storage facilities whose effects are considered must be located within approved drainage easements.

5. *Provide for acceptance of runoff from upstream drainage areas*.

a. It is critical that provisions be made to receive runoff from upstream drainage areas. Drainage easements or public right-of-way must extend to a point where the upstream drainage area is no greater than five (5) acres.

b. Drainage easements or public right-of-way must extend to the point where existing watercourses enter the site. Where the upstream drainage area is five (5) acres or greater, but does not discharge onto the site through a defined watercourse, the drainage easement shall extend to the point of lowest elevation.

6. *Provide a means to convey runoff across the site*. Stormwater shall be conveyed across the site in a system of overland drainage ways and storm sewers. Overland drainage ways consists of streets, open channels, swales and overland flow within drainage easements.

7. *Discharge of runoff to downstream properties*.

a. Concentrated runoff shall be discharged only into existing watercourses, drainage easements or public road rights-of-way. Where none of these exist, a drainage easement which extends to the nearest watercourse, drainage easement or public road right-of-way must be obtained from the downstream property owner and proper provisions made for conveyance of the peak flow from the one percent (1%) annual probability (100-year) storm within the drainage easement.

b. One of the typical results of urbanization is that diffuse surface flow or "sheet flow" is replaced with concentrated points of discharge. Where concentrated flows are discharged to downstream properties proper provisions must be made to:

(1). Allow the flow to spread over the same area as would have occurred for the same rate of flow prior to the development, and

(2). Reduce the rate of velocity to rates at least equal to the pre-development values at the same rate of flow.

8. *Assess potential downstream flooding problems*.

a. It is important that a determination be made of conditions in the watershed downstream of each development site. Specifically it is important to determine whether there are existing structures, which are subject to an unacceptable flooding hazard.

b. If areas having an unacceptable flooding hazard occur downstream of a development site, either on-site detention for peak flow control or mutually agreed off-site improvements will be required, as set forth in Section 410.680.

9. *Assess potential water quality impacts on receiving waters*. Sediment, erosion and other water quality controls are required as set forth in Section **410.700** and Section **410.710**.

C. Drainage Easements. All areas subject to inundation during the major storm must be included in drainage easements. Specific standards for drainage easements to be provided for storm sewers, open channels and detention facilities are set forth in Section 410.680.

410.670 Stormwater Runoff Calculations

A. This Section outlines acceptable methods of determining stormwater runoff.

1. *General guidelines*.

a. For watersheds with a total tributary area less than two hundred (200) acres and a one percent (1%) annual probability (100-year) fully developed discharge less than three hundred (300) cfs, the design storm runoff may be analyzed using the rational formula.

b. For watersheds with a total tributary area greater than two hundred (200) acres or with a one percent (1%) annual probability (100-year) fully developed discharge greater than three hundred (300) cfs, the design storm runoff shall be analyzed using an approved hydrograph method.

2. *Rational formula*.
   a. The rational formula, when properly understood and applied, can produce satisfactory results for urban storm sewer design. The rational formula is as follows:
      Q = CIA
      Where:

      Q = Peak discharge in cubic feet per second.
      C = Runoff coefficient which is the ratio of the maximum rate of runoff from the area to the average rate of rainfall intensity for the time of concentration.
      I = Average rainfall intensity in inches per hour for a duration equal to the time of concentration.
      A = Contributing watershed area in acres.

   b. The basic assumptions made when applying the rational formula are:
      (1) The rainfall intensity is uniform over the basin during the entire storm duration.
      (2) The maximum runoff rate occurs when the rainfall lasts as long or longer than the basin time of concentration.
      (3) Runoff response characteristics are relatively uniform over the entire basin.
      (4) The time of concentration is the time required for the runoff from the most hydraulically remote part of the basin to reach the point of interest.
   c. The drainage basin should be divided into sub-basins of a size where all of the basic assumptions apply.
3. *Time of concentration*.
   a. Time of concentration, etc., is calculated by:
      tc = ti + tt (5 minutes, minimum);where
      ti = initial, inlet or overland flow time in minutes,
      tt = shallow channel and open channel flow time in minutes.
   b. Overland flow (sheet flow) time shall be calculated as:
      ti = (n x L)0.8/(4.64 x S0.4) where
      ti = initial, inlet or overland flow time in minutes,
      n = Manning's n for sheet flow (from the following table),
      L = Overland flow length in feet, (maximum of three hundred (300) feet),
      S = Slope in feet per foot.

ROUGHNESS COEFFICIENTS (Manning's n) FOR SHEET FLOW SURFACE DESCRIPTION

Smooth surfaces (concrete, asphalt, gravel or bare soil)	0.011
Fallow (no residue)	0.050

~~Cultivated soils:~~	
~~Residue cover less than or equal to 20%~~	~~0.060~~
~~Residue cover greater than or equal to 20%~~	~~0.170~~
~~Grass:~~	
~~Short grass prairie~~	~~0.150~~
~~Dense grasses[1]~~	~~0.240~~
~~Bermuda grass~~	~~0.410~~
~~Range (natural)~~	~~0.130~~
~~Woods:[2]~~	
~~Light underbrush~~	~~0.400~~
~~Dense underbrush~~	~~0.800~~

~~**NOTES:**~~

~~1 Includes species such as weeping lovegrass, bluegrass, buffalo grass, blue grama grass and native grass mixtures.~~

~~2 When selecting n, consider cover to a height of about 0.1 feet. This is the only part of the plant cover that will obstruct sheet flow.~~

~~Shallow channel velocities may be estimated from Figure 3-1 in reference 11.~~

~~Open channel flow velocities may be estimated from Manning's equation. Open channel velocities are generally estimated under bank full conditions.~~

~~The basin time of concentration calculation techniques are described in detail in TR-55, Chapter 3 (reference 11).~~

4. ~~*Hydrograph methods*.~~

~~a. Methodologies.~~

~~(1) The most common hydrograph techniques are those developed by the Corps of Engineers and the Soil Conservation Service. These methods are preferred, however other proven techniques will be accepted.~~

(2) The Corps of Engineers HEC-1 Flood Hydrograph Package and Soil Conservation Service TR-55 computer models are the preferred runoff models. Other models may be used with approval from the City.

(3) The runoff model must include the entire drainage basin upstream of the proposed development. The model shall be prepared in sufficient detail to ensure that peak runoff rates are reasonably accurate.

(4) The runoff model shall be developed for the following cases:

(5) Case 1: Existing conditions in the drainage basin prior to development of the applicant's property.

(6) Case 2: Existing conditions in the drainage basin with developed conditions on the applicant's property.

(7) Case 3: Fully developed conditions in the entire drainage basin.

b. Rainfall.

(1) Rainfall depth-duration-frequency and intensity-duration-frequency curves for the Republic area are included in the standard drawings. The design rainfall intensities were developed from the U.S. Department of Commerce, National Weather Service, Technical Paper 40 (reference 19) and the National Oceanic and Atmospheric Administration publication "HYDRO-35" (reference 9).

(2) Rainfall depths for use with hydrograph techniques shall be taken from "Rainfall Frequency atlas of the Midwest, Bulletin 71" (reference 23).

(3) Rainfall shall be distributed in time using Huffs Distribution or the Pilgrim-Cordery Distribution adapted to local rainfall data (references 20 and 21) as shown in the following table. Other distributions may be used upon approval from the City.

Pilgrim-Cordery Method Synthetic Rainfall Mass Curves

Cumulative Fraction of Depth	**Cumulative Fraction of Storm Duration**				
	1 Hour	**2 Hour**	**3 Hour**	**4 Hour**	**6 Hour**
.00	.00	.00	.00	.00	.00
.05	.03	.03	.03	.02	.05
.10	.07	.05	.05	.03	.09
.15	.11	.10	.06	.05	.14
.20	.14	.17	.09	.06	.20
.25	.17	.22	.11	.08	.28

.30	.23	.25	.13	.14	.35
.35	.29	.27	.19	.20	.41
.40	.35	.29	.31	.27	.43
.45	.41	.30	.39	.33	.46
.50	.47	.31	.44	.38	.49
.55	.56	.41	.47	.47	.60
.60	.65	.51	.54	.56	.70
.65	.73	.60	.64	.64	.80
.70	.82	.69	.70	.74	.86
.75	.91	.78	.73	.83	.89
.80	.93	.82	.81	.87	.93
.85	.95	.87	.89	.90	.96
.90	.97	.92	.94	.93	.97
.95	.99	.96	.98	.97	.98
1.00	1.00	1.00	1.00	1.00	1.00

410.680 Stormwater Drainage Structures

A. *Inlets*.

1. *Inlet locations*. Inlets shall be provided at locations and intervals and shall have a minimum inflow capacity such that maximum flooding depths set below are not exceeded for the specified storm; at all sump locations where ponding of water is not desired and where drainage cannot be released at the ground surface.
2. *Inlet interception capacities*.
    a. Inlet capacities shall be determined in accordance with the Federal Highway Administration HEC-12 Manual (reference 5).
    b. Nomographs and methods presented in the Neenah Inlet Grate Capacities report (reference 12) may also be used where applicable.

c. The use of commercial software utilizing the methods of HEC-12 is acceptable. It is recommended that software be pre-approved for use by the City.

3. *Clogging factors.* The inlet capacities determined as required in this Section must be reduced as follows, in order to account for partial blockage of the inlet with debris:

Inlet Type And Location	**Clogging Factor**
Type SS Curb Opening Inlets:	
on grades	0.9
in sumps	0.8
Grated Inlets:	
on grades	0.6
in sumps	0.5

Inlet lengths or areas shall be increased as required to account for clogging.

4. *Interception and bypass flow*. It is generally not practical for inlets on slopes to intercept one hundred percent (100%) of the flow in gutters. Inlets must intercept sufficient flow to comply with street flooding depth requirements. Bypass flows shall be considered at each downstream inlet, until all flow has entered approved storm sewers or drainage ways.

5. *Allowable street depths*. Urban streets are a necessary part of the City drainage system. The design for the collection and conveyance of storm water runoff is based on a reasonable frequency and degree of traffic interference. Depending on the street classification, (i.e. local, collector, etc.) portions of the street may be inundated during storm events. Drainage of streets are controlled by both minor and major storm events. The minor system is provided to intercept and convey nuisance flow. Flow depths are limited for the major storm to provide for access by emergency vehicles during most flood events. When the depths of flow exceed the criteria presented in this Section a storm sewer or open channel system is required.

a. *General design guidelines*.

(1). *Allowable flow depths:* Flow in the street is permitted with allowable depths of flow as follows:

(2). *Local streets:* Crown of the street for the runoff from a 5-year rainfall, top of curb for runoff from a 25-year rainfall. Runoff from a 100-year rainfall should be contained within the right-of-way.

(3). *Collector streets:* The equivalent of one (1) ten (10) foot driving lane must remain clear of water during a 5-year rainfall, top of curb for runoff from a 25-year rainfall. Runoff from a 100-year rainfall should be contained within the right-of-way.

(4). *Arterials and parkways:* Two (2) ten (10) foot lanes must remain clear of water, one (1) in each direction, during a 5-year rainfall. Top of curb for runoff from a 25-year rainfall. Runoff from a 100-year rainfall should be contained within the right-of-way. Where allowable depths are exceeded a storm sewer system must remove the excess water.

(5). *Arterials and parkways:* Two (2) ten (10) foot lanes must remain clear of water, one (1) in each direction for the 25-year storm. For the 100-year storm, a maximum of six (6) inches at the crown, depth at the gutter shall not exceed eighteen (18) inches. Where allowable depths are exceeded a storm sewer system must remove the excess water.

b. *Cross flow*. Cross flow at intersections is permitted up to the following depth.

Street Classification	**5-year Storm**	**25-year Storm**
	Allowable Depth	**Allowable Depth**
Local	6" in cross pan flow line	12" at gutter
Collector	No cross flow permitted	6" at gutter
Arterial or Parkway	No cross flow permitted	No cross flow permitted

c. *Hydraulics*. The allowable storm capacity of each street section with curb and gutter is calculated using the modified Manning's formula for both the 2-year and 25-year storm event.

	Q = 0.56(Z/n)S1/2d8/3
Where,	Q = discharge in cubic feet per second
	Z = cross slope of the street in feet per foot
	d = depth of flow at the gutter in feet

	S = longitudinal slope of the street in feet per foot
	n = Manning's roughness coefficient

6. *Types of inlets allowed*.

a. *Public streets*.

(1). *Curb opening inlets*. Type "SS" standard curb opening inlets as shown Drawing 140 shall be used for public streets with curb and gutter.

(2). *Graded inlets*.

In general the use of grated inlets in streets, which require adjustment when streets are repaved will not be permitted.

Where conditions are such that curb inlets cannot intercept the required rate of flow, necessary to control street flooding depth or to provide diversion of flow to detention, sedimentation or infiltration basins, "trench inlets" with veined grates may be specified with approval of the City.

Other types of inlets will not be permitted unless approved by the City.

b. *Outside of public right-of-way*. The type of inlets specified outside of public right-of-way is left to the discretion of the designer provided the following criteria are met:

(1). Maximum flooding depths for the major or minor storm as set forth above are not exceeded.

(2). General safety requirements set forth below are met.

(3). All inlets shall be depressed a minimum of two (2) inches below the surrounding grade to allow proper drainage to the inlet and prevent inadvertent ponding in the area around the inlet.

(4). Inlets in pavements shall be provided with a concrete apron.

7. *General safety requirements*. All inlet openings shall:

a. Provide for the safety of the public from being swept into the storm drainage system; the maximum allowable opening shall not exceed six (6) inches in width.

b. Be sufficiently small to prevent entry of debris which would clog the storm drainage system;

c. Be sized and oriented to provide for safety of pedestrians, bicyclists, etc.

B. *Storm Sewers*.

1. *Design criteria*.

a. *Design storm frequency*. The storm sewer system, beginning at the upstream end with inlets, is required when the 5-year peak flow in the street exceeds five (5) cfs or when allowable street depths are exceeded. Allowable street depths are specified above.

b. *Construction materials*. Storm sewers may be constructed using reinforced concrete, corrugated metal (steel or aluminum) or plastic pipe. The materials, pipes or appurtenances shall meet one (1) or more of the following standards:

PIPE MATERIAL	**STANDARD**

~~Reinforced Concrete Pipe — Round~~	~~ASTM C-76 or AASHTO M-170~~
~~Reinforced Concrete Pipe — Elliptical~~	~~ASTM C-507 or AASHTO M-207~~
~~Reinforced Concrete Pipe — Joints~~	~~ASTM C-443 or AASHTO M-198~~
~~Reinforced Concrete Pipe — Arch~~	~~ASTM C-506 or AASHTO M-206~~
~~Pre-cast Concrete Manholes~~	~~ASTM C-478 or AASHTO M-199~~
~~Pre-cast Concrete Box Pipe~~	~~ASTM C-789/C-850 or AASHTO M-259/M-273~~
~~Corrugated Steel Pipe-Metallic Coated for Sewers and Drains~~	~~AASHTO M-36~~
~~Corrugated Aluminum Alloy Pipe and Under Drains~~	~~AASHTO M-196~~
~~Bituminous Coated Corrugated Metal Pipe and Pipe Arches~~	~~AASHTO M-190~~
~~Corrugated PVC Pipe~~	~~ASTM D-3034 and ASTM F-679~~
~~Corrugated Polyethylene Pipe~~	~~ASTM D-1248~~

~~c. *Vertical alignment*.~~

~~(1). The sewer grade shall be such that a minimum cover is maintained to withstand AASHTO HS-20 loading on the pipe. The minimum cover depends upon the pipe size, type and class and soil bedding condition, but shall not be less than one (1) foot from the top of pipe to the finished grade at any point along the pipe. If the pipe encroaches on the street subgrade, approval is required. Manholes will be required whenever there is a change in size, direction, elevation grade and slope or where there is a junction of two (2) or more sewers. The maximum spacing between manholes for storm sewers (cross sectional area less than twenty-five (25) square feet) shall be four hundred (400) feet. For large storm sewers (cross sectional area greater than twenty-five (25) square feet), manholes for maintenance access need only be placed a minimum of every five hundred (500) feet; access to the laterals can be obtained from within the larger storm sewer.~~

~~(2). The minimum clearance between storm sewer and water main (for new construction), either above or below shall be twelve (12) inches. Concrete encasement of the water line will be required for clearances of twelve (12)~~

inches or less when the clearance between existing water mains cannot be obtained.

(3). The minimum clearance between storm sewer and sanitary sewer (for new construction), either above or below, shall be eighteen (18) inches. In addition, when an existing sanitary sewer main lies above a storm sewer or within eighteen (18) inches below, the sanitary sewer shall have an impervious encasement or be constructed of structural sewer pipe for a minimum of ten (10) feet on each side of the storm sewer crossing.

(4). Siphons or inverted siphons are not allowed in the storm sewer system.

d. *Horizontal alignment*.

(1). Storm sewer alignment between manholes shall be straight except when approved by the City. Approved curvilinear storm sewers may be constructed by using radius pipe. The radius requirement for pipe bends is dependent upon the manufacturer's specifications.

(2). A minimum horizontal clearance of ten (10) feet is required between sanitary and water utilities and the storm sewer.

(3). The permitted locations for storm sewer within a street ROW are: (a) on centerline, (b) between centerline and curb and (c) behind the curb. Storm sewer shall not be placed on the area within the wheel lanes of the pavement.

e. *Pipe size*. The minimum allowable pipe size for storm sewers is dependent upon a diameter practical from the maintenance standpoint. For storm sewers less than fifty (50) feet in length the minimum allowable diameter is fifteen (15) inches. All other pipe shall have a minimum diameter of eighteen (18) inches.

f. *Storm sewer capacity and velocity*.

(1). Storm sewers should be designed to convey the design storm (25-year) flood peaks without surcharging the storm sewer. The sewer may be surcharged during larger floods and under special conditions when approved by the City.

(2). The capacity and velocity shall be based on the Manning's n-values presented in Table I. The maximum full flow velocity shall be less than fifteen (15) fps. Higher velocities may be approved by the City if the design includes adequate provisions for uplift forces, dynamic impact forces and abrasion. The minimum velocity in a pipe based on full flow shall be two and one-half (2.5) fps and the minimum slope shall be one-half percent (0.50%) to avoid excessive accumulations of sediment. The energy grade line (EGL) for the design flow shall be no more than six (6) inches below the final grade at manholes, inlets or other junctions. To insure that this objective is achieved, the hydraulic grade line (HGL) and the energy grade line (EGL) shall be calculated by accounting for pipe friction losses and pipe form losses. Total hydraulic losses will include friction, expansion, contraction, bend, manhole and junction losses. The methods for estimating these losses are presented in the following Sections.

g. *Storm sewer outlets*. All storm sewer outlets into open channels shall be constructed with a headwall and wingwalls or a flared end section. Riprap or other approved material shall be provided all outlets.

h. *Hydraulic evaluation*. Presented in this Section are the general procedures for hydraulic design and evaluation of storm sewers. The user is assumed to possess a basic working knowledge of storm sewer hydraulics and is encouraged to review textbooks and other technical literature available on the subject.

i. *Pipe friction losses*. Pipe friction losses are estimated using Equation 1001 and Manning's formula (Equation 1002) which are expressed as follows:

	$Hf = Sf \times L$	(1001)
Where,	Hf = head loss due to friction (feet)	
	Sf = friction slope from Manning's equation (feet per foot)	
	L = length of pipe segment (feet)	
and	$V = 1.49 \times R^{2/3} \times Sf^{1/2}/n$	(1002)
Where,	V = velocity of flow (feet per second)	
	R = hydraulic radius = A/WP (feet)	
	Sf = friction slope (feet per foot)	
	A = area of flow (square feet)	
	WP = wetted perimeter (feet)	
	n = Manning's roughness coefficient (Table I)	

j. *Pipe form losses*. Generally, between the inlet and outlet, the flow encounters, in the flow passageway, a variety of configuration such as changes in pipe size, branches, bends, junctions, expansions and contractions. These shape variations impose losses in addition to those resulting from pipe friction. Form losses are the result of fully developed turbulence and can be expressed as follows:

	$HL = K (V^2/2g)$	(1003)
Where,	HL = head loss (feet)	
	K = loss coefficient	
	$V^2/2g$ = velocity head (feet)	

	g = gravitational acceleration (32.2 ft/sec^2).	

The following is a discussion of a few of the common types of form losses encountered in storm design.

(1). *Expansion losses*. Expansion losses in a storm sewer will occur when the sewer outlets into a channel. The expansion will result in a shearing action between the incoming high velocity jet and the surrounding outlet boundary. As a result, much of the kinetic energy is dissipated by eddy currents and turbulence. The loss head can be expressed as:

	$HL = Kx (V1^2/2g)(1-(A1/A2))^2$	(1004)
Where,	A = cross section area in square feet	
	V1 = average upstream pipe flow velocity, feet per second	
	Kx = expansion loss coefficient.	

Subscripts 1 and 2 denote the upstream and downstream sections respectively. The value of Kx is about one (1.0) for a sudden expansion (such as an outlet to a channel) and about two tenths (0.2) for a well-designed expansion transition. Table II presents the expansion loss coefficient for various flow conditions.

(2). *Contraction losses*. The form loss due to contraction is:

	$HL = Kc(V2^2/2g)(1-(A2/A1)^2)^2$	(1005)
Where,	Kc = Contraction loss coefficient	

Kc is equal to 0.5 for a sudden contraction and about 0.1 for a well-designed transition. Subscripts 1 and 2 denote the upstream and downstream sections respectively. Table II presents the contraction loss coefficient for various flow conditions.

(3). *Bend losses*. The head losses for bends in excess of that caused by an equivalent length of straight pipe may be expressed by the relation:

	$HL = Kb(V2/2g)$	(1006)

Where,	Kb = Bend coefficient	

The bend coefficient has been found to be a function of: (a) the ratio of the radius of curvature of the bend to the width of the conduit, (b) deflection angle of the conduit, (c) geometry of the cross section of flow and (d) the Reynolds Number and relative roughness. Recommended bend loss coefficients for standard bends, radius pipe and bends through manholes are presented in Table II.

(4). *Junction and manhole losses*. A junction occurs where one (1) or more branch sewers enter a main sewer, usually at manholes. The hydraulic design of a junction is in effect the design of two (2) or more transitions, one (1) for each flow path. Allowances should be made for head loss due to the impact at junctions. The head loss at a junction for each pipe entering the junction can be calculated from:

	$HL = (V2^2/2g) = Kj(V1^2/2g)$	(1007)
Where,	V2 = the outfall flow velocity	
	V1 = the inlet velocity	
	Kj = junction loss coefficient	

Because of the difficulty in evaluating hydraulic losses at junctions (Reference 6) due to the many complex conditions involving pipe size, geometry of the junction and flow combinations, a simplified table of loss coefficients has been prepared. Table II presents the recommended energy loss coefficients for typical manhole or junction conditions encountered in the urban storm sewer system.

(5). *Partially full pipe flow*. When a storm sewer is not flowing full, the sewer acts like an open channel and the hydraulic properties can be calculated using open channel.

(6). *Storm sewer outlets*. When the storm sewer system discharges into an open channel, additional losses, in the form of expansions losses, occur at the outlet. For a headwall and no wing walls, the loss coefficient Ke is one (1.0). For a headwall with forty five degree (45°) wing walls, the loss coefficient is about one and fourteen hundredths (1.14). For a flared end section (which has a D2/D1 ratio of two (2) and a theta angle of around thirty degrees (30°)) the loss coefficient is approximately one-half (0.5).

(7). *Connection pipes*.

(A). Connector pipes are used to convey runoff from an inlet to the storm sewer. If, however, the storm sewer runs through the inlet, then a connector pipe is not needed. Connector pipes can connect a single inlet to the storm sewer or they can be connected in a series.

(B). These bends, turns and flows through the connector pipe give rise to three (3) hydraulic losses: a change from static to kinetic energy to get the water moving through the connector pipe, an entrance loss from the inlet to the connector pipe and a friction loss along the length of the connector pipe. The total head loss in the connector pipe can be calculated from the following equation:

	Hcp = Hv + Ke x Hv + Sf x L	(1009)
Where,	Hcp = head loss in the connector pipe (feet)	
	Ke = Entrance loss coefficient	
	Hv = velocity head in the pipe, assuming full pipe flow (feet)	

and the other variables are as previously defined. The value of the entrance loss coefficient is determined from Table II.

(C). If the connector pipes are connected in series, the head loss in each pipe is calculated from Equation 1009 and the total head loss is the summation of the individual head losses.

2. *Easements*. Easements shall be provided for all storm sewers constructed in the City of Republic that are not located within public rights-of-way. The minimum easement widths are as follows:
    a. For pipes forty-eight (48) inches or less in diameter or width the required easement width is fifteen (15) feet.
    b. For pipes and boxes greater than forty-eight (48) inches in width the required easement width is fifteen (15) feet plus half the width of the proposed storm sewer.
    c. Storm sewers greater than eight (8) feet in depth to the flow line may require additional easement width.
    d. All easements required for construction, which are not included on the final plat shall be recorded and filed with the City prior to approval of the construction drawings.

C. *Design Standards For Culverts*.

1. *Structural design*. All culverts shall be designed to withstand an HS-20 loading in accordance with the design procedures of AASHTO "Standard Specifications for Highway Bridges". The designer shall also check the construction loads and utilize the most severe loading condition. The minimum allowable cover is one (1) foot.
2. *Design capacity*. Culverts shall be designed to pass a 25-year storm with one (1) foot of freeboard prior to overtopping the road or driveway.

3. *Headwater*. The maximum headwater for the major storm design flow shall be one and one-half (1.5) times the culvert diameter for round culverts or one and one-half (1.5) times the culvert rise dimension for shapes other than round.
4. *Inlet and outlet protection*. For road and driveway culverts larger than fifteen (15) inches, culverts are to be designed with protection at the inlet and outlet areas as provided in Section **410.710** of this criteria. Headwalls or end sections are to be located a sufficient distance from the edge of the shoulder or the back of walk to allow for a maximum slope of 3H:1V to the back of the structure. The type of outlet protection required is as follows:

V<7FPS	7FPS<V<15FPS	V>15FPS
Minimum Riprap protection	Riprap protection or Energy Dissipater	Energy dissipater

5. *Velocity limitations*. The maximum allowable discharge velocity is fifteen (15) feet per second.
6. *Culvert hydraulics*. It is recommended that the procedures outlined in the publication "Hydraulic Design of Highway Culverts" (reference 4) be used for the hydraulic design of culverts. Backwater calculations demonstrating the backwater effects of the culvert may be required.

D. *Design Standards For Bridges.*

1. *Structural design*. All bridges shall be designed to withstand an HS-20 loading in accordance with the design procedures of AASHTO "Standard Specifications for Highway Bridges" (reference 13). The designer shall also check the construction loads and utilize the most severe loading condition.
2. *Design capacity*. Bridges shall be designed to pass the 100-year storm with one (1) foot of freeboard between the water surface and the bridge low chord.
3. *Backwater*. "*Backwater*" is defined as the rise in the water surface due to the constriction created by the bridge approach road fills. The maximum backwater for the 100-storm design flow shall be one (1) foot.
4. *Velocity limitations*. Discharge velocities through bridge openings shall be limited to fifteen (15) feet per second. Abutment and channel scour protection shall be provided at all bridges.
5. *Bridge hydraulics*. All bridge hydraulics shall be evaluated using the procedures presented the publication "Hydraulics of Bridge Waterway" (reference 14). Backwater calculations demonstrating the effects of the bridge and approach fills compared to the existing flood stages shall be submitted for all bridges.

E. *Design Standards For Open Channels*.

1. *General design guidelines.*
    a. *Natural channels*. The hydraulic properties of natural channels vary along the channel reach and can be either controlled to the extent desired or altered to meet the given requirements. Natural channels used as part of the drainage system must be evaluated for the effects of increased peak flow, flow duration and volume of runoff due to urbanization.
    b. *Grass lined channels*. Grass lined channels are the most desirable of the artificial channels. The channel storage, lower velocities and the greenbelt multiple use

benefits obtained create significant advantages over other artificial channels. Unless existing development restricts the availability of right-of-way, channels lined with grass should be given preference over other artificial types. The minimum slope in a grass-lined channel shall be one percent (1.0%) unless a concrete low flow channel is installed.

c. *Concrete lined channels*. Concrete lined channels are sometimes required where right of way restrictions within existing development prohibit grass-lined channels. The lining must be designed to withstand the various forces and actions, which tend to overtop the bank, deteriorate the lining, erode the soil beneath the lining and erode unlined areas. The minimum slope in a concrete lined channel shall be one-half percent (0.50%).

d. *Rock lined channels*. Rock lined channels are constructed from ordinary riprap or wire enclosed riprap (gabions etc.). The rock lining permits higher design velocity than for grass lined channels. Rock linings will normally be used only for erosion control at culvert/storm sewer outlets, at sharp channel bends, at channel confluences and at locally steepened channel sections.

e. *Other lining types*. The use of fabrics and other synthetic materials for channel linings has increased over the past several years. Proposed improvements of this type will be reviewed on an individual basis as for applicability and performance.

2. *Hydraulics*. An open channel is a conduit in which water flows with a free surface. The calculations for uniform and gradually varied flow are relatively straightforward and are based upon similar assumptions (e.g. parallel streamlines). The basic equations and computational procedures are presented in this Section.

a. *Uniform flow*. Open channel flow is said to be uniform if the depth of flow is the same at every section of the channel. For a given channel geometry, roughness, discharge and slope, there is only one possible depth, the normal depth. For a channel of uniform cross section the water surface will be parallel to the channel bottom for uniform flow.

b. The computation of normal depth for uniform flow shall be based upon Manning's formula as follows:

	$Q = (1.49/n)AR^{2/3}S^{1/2}$
Where,	Q = Discharge in cubic feet per second (cfs)
	n = Roughness coefficient (Table I)
	A = Cross sectional flow area in square feet
	R = Hydraulic radius, A/P, in feet
	P = Wetted perimeter in feet
	S = Slope of the energy grade line (EGL) in feet/foot

For channels with a uniform cross section the EGL slope and the bottom slope are assumed to be the same.

c. *Critical flow*. The design of earth or rock channels in the critical flow regime (Froude numbers from 0.9 to 1.2) is not permitted. The Froude number is defined as follows:

	$F = V/(gD)^{0.5}$
Where,	F = Froude number
	V = Velocity in feet per second (fps)
	g = Acceleration of gravity, 32.2 ft/sec^2
	D = Hydraulic depth in feet = A/T
	A = Cross sectional flow area in square feet
	T = Top width of flow area in feet

The Froude number shall be calculated for the design of all open channels.

d. *Gradually varied flow*.

(1). The most common occurrence of gradually varied flow in storm drainage is the backwater created by culverts, storm sewer inlets or channel constrictions. For these conditions the flow depth will be greater than normal depth in the channel and the water surface profile must be computed using backwater techniques.

(2). Backwater computations can be made using the methods presented in Chow (reference 1). Many computer programs are available for computation of backwater curves. The most widely used program is HEC-2, Water Surface Profiles, developed by the U.S. Army Corps of Engineers (reference 2) and is the program recommended for backwater profile computations. Another program by the Federal Highway Administration is WSPRO and is acceptable for use in backwater computations.

3. *Design standards*.

a. *Flow velocity*. Maximum flow velocities shall not exceed the following:

Channel Type	**Max. Velocity**
Grass lined*	5 fps
Concrete	15 fps
Rock Lined	10 fps
*Refer to item f. below	

b. *Maximum depth*. The maximum allowable channel depth of flow is three (3) feet for the design flow.

c. *Freeboard requirements*.

(1). "*Freeboard"* is defined as the vertical distance between the computed water surface elevation for the design flow and the minimum top of bank elevation for a given cross section.

(2). For all channels one (1) foot minimum of freeboard is required.

(3). Freeboard shall be in addition to super elevation.

d. *Curvature*. The minimum channel centerline radius shall be three (3) times the top width of the design flow.

e. *Super elevation*. Super elevation shall be calculated for all curves. An approximation of the super elevation h may be calculated from the following formula:

	$H = V^2T/(gr)$
Where,	h = Super elevation in feet
	V = Velocity in fps
	T = Top width of flow area in feet
	G = Acceleration of gravity, 32.2 ft/sec^2
	r = radius of curvature in feet

~~Freeboard shall be measured above the super elevated water surface.~~

~~f. *Grass channels*.~~

~~(1). Side slopes shall be three (3) (horizontal) to one (1) (vertical) or flatter. Steeper slopes may be used subject to additional erosion protection and approval from the City.~~

~~(2). For design discharges greater than fifty (50) cfs, grade checks shall be provided at a maximum of two hundred (200) feet horizontal spacing.~~

~~(3). Channel drops shall be provided as necessary to control the design velocities within acceptable limits.~~

~~(4). Vertical drops may be used up to three (3) feet in height. Drops greater than three (3) feet shall be baffled chutes or similar structures.~~

~~(5). The variation of Manning's n with the retardance and the product of mean velocity and hydraulic radius as shown in Figure 7.23 in reference 17 shall be used in the capacity calculations. Retardance curve C shall be used to determine the channel capacity and retardance curve D shall be used to determine the velocity.~~

~~4. *Easements*.~~

~~a. Easements shall be provided for all open channels constructed in the City of Republic that are not located within public rights of way. The minimum easement width for open channels is the flow width inundated by a 100-year event plus fifteen (15) feet.~~

~~b. All easements required for construction, which are not included on the final plat shall be recorded and filed with the City prior to approval of the construction drawings.~~

410.690 Stormwater Detention Design

A. *Purpose*.

~~1. Detention facilities are used to reduce storm water runoff rates by storing excess runoff.~~

1. ~~2~~. The usual function of a detention facilities is to provide sufficient storage such that peak runoff rates are not increased when development occurs. **A secondary function may be to settle pollutants such as sediment from the stormwater before discharge to the natural drainageway.**

2. All Detention/Retention basins shall follow design guidelines outlined in the latest version of the Stormwater Management and Design Criteria Manual.

B. ~~*Policy*. The primary goal of the City of Republic stormwater management program is the prevention of flood damage to residential, commercial and public property. In adopting this policy, City of Republic recognizes that:~~

~~1. There are many areas in the City where residential flooding occurs because of inadequately sized drainage ways.~~

~~2. Flooding depths and frequency will increase as development occurs upstream of these areas.~~

~~3. Detention basins are the only effective "on-site" means which can be used to control peak runoff storm water rates as areas develop.~~

~~4. The City of Republic further recognizes that:~~

~~a. The best means to assure effective performance of a detention basin utilize is perform reservoir routing calculations using hydrographs.~~

~~b. Such methods have not been in widespread use in this area, but rather a method known as the "Simplified Volume Formula" has been the basis of City detention policy.~~

~~c. Use of the Simplified Volume Formula frequently does not result in adequately sized detention facilities.~~

~~d. The inaccuracy of the Rational Method upon which the Simplified Volume Formula is based increases as the area under consideration increases.~~

~~e. Even though the Simplified Volume Formula has severe limitations, requirement of detailed analytical methods may not be justified in all cases.~~

~~f. Detention basins designed using the Simplified Volume Formula do provide a minimal amount of flooding protection and potential water quality benefits by functioning as sediment basins.~~

~~5. Therefore, in order to provide a reasonable level of flood protection to homes and businesses, while maintaining a climate favorable for development and economic growth, City of Republic has established the following policy for design of detention facilities.~~

~~C. *Methods of Analysis*. The method of analysis to be required for the design of detention facilities will be determined as follows:~~

~~1. Detailed analysis will be required in the following cases:~~

~~a. In areas where residences or other structures located downstream of a development can be shown to have an imminent flooding hazard a detailed analysis using hydrographs and reservoir routing techniques will be required.~~

~~b. Residences or other structures will be defined as having an imminent flooding hazard when the lowest point, at which surface runoff may gain entry, is located at or below the estimated flooding level which would result from a storm with an annual probability of one percent (1%) or greater under conditions existing in the basin prior to development of the applicant's property (i.e., affected by the "100-year" storm).~~

~~c. Consideration of downstream flooding problems will be limited to the area which may reasonably be expected to be significantly affected by runoff from the applicant's property.~~

~~d. Detailed analysis will be required for all detention facilities where the peak runoff rate from the area upstream of the detention facility (off-site and on-site) exceeds fifty (50) cfs (cubic feet per second) for a storm with an annual probability of one percent (1%) (the "100-year" storm) under fully developed conditions. (Note: This would be the rate of flow from approximately twelve (12) acres for residential areas or five (5) acres for fully paved commercial areas.)~~

~~2. Simplified analysis will be permitted in the following cases: For areas where there are no imminent downstream flooding problems and where the peak runoff rate from the drainage area (off-site and on-site) upstream of the detention facility does not exceed fifty (50) cfs for the one percent (1%) annual probability ("100-year") storm under fully developed conditions, the Simplified Volume Formula may be used.~~

B. ~~*D*~~*. Alternatives to detention*.

1. *Residential subdivisions*. Unless otherwise approved by the City, through review of stormwater calculations and criteria referenced herein, detention shall be required in all major residential subdivisions. Upon request by a developer, the City may consider alternatives to detention in cases where it can be proven that the absence of detention will not adversely affect downstream property owners. Each request will be evaluated

on a case-by-case basis and an alternative to detention may be established for the purposes of regional improvements within the watershed or abroad in the City.

2. ***Justified exceptions*. The City may consider, upon request, a waiver of detention for sites, in which the alteration of the site is inconsequential and will not substantially increase the runoff. A justified exception will be granted for sites based on the following criteria.**
    a. **Existing sites in which the addition of impervious surface will not increase more than five thousand (5,000) square feet.**
    b. **Sites in which existing gravel, chat or stone parking lots or driveways are paved with asphalt cement or concrete surfaces shall be considered 50% of the sf of an increase in impervious surface. This shall not apply to parking areas or circulation routes in which vegetation has consumed the site and altered the ability to shed or absorb runoff. The BUILDS Department shall exercise strict discretion with respect to approving exceptions based on these criteria.**
    c. **Sites in which a change in use has occurred, that does not increase the impervious area of the site.**
    d. **Subdivisions meeting the definition of a minor subdivision or the development of individual single-family-residential homes on individual lots in existing subdivisions.**

C. ***Procedure*. A request for approval of an alternative to detention must begin with the applicant providing the BUILDS Department with stormwater calculations for the increased runoff from the development. In addition to providing calculations, the applicant must submit a request for alternative design based on the criteria established above. The BUILDS Department will review the and/or other departments impacted by the request. If the City determines the request is justified the City will notify the applicant or his representative of the approval and the necessary improvements required in lieu of installing detention.**

D. ***Innovation in design*.**
    1. **It is the desire of the City that detention facilities be designed and constructed in a manner to enhance aesthetic and environmental qualities of the City as much as possible.**
    2. **The City of Republic therefore encourages designs, which utilize and enhance natural settings and minimize disturbance and destruction of wooded areas, natural channels and wetlands.**

E. ***Interpretation*.**
    1. **Interpretations of the detention policy will be made by the BUILDS Administrator or their designee in writing.**

3. ~~*Alternatives to detent*~~*ion*.

    ~~a. *Fee in lieu of detention*. In cases where channelization or other improvements can be shown to be more effective than detention in reducing the flooding hazard to downstream properties and where no adverse effects to downstream properties will result from construction of such improvements, the City may enter into an agreement with the applicant to accept compensation in lieu of constructing on-site detention facilities.~~
    ~~b. The City has established the following formula for the fee in lieu of detention: Fee = K * (Ia) acres of impervious surface added~~

~~Where Ia is the increase in impervious area (roofs, pavement, driveways, patios, etc.) in acres and K shall be determined as follows:~~

~~K shall equal ten thousand dollars ($10,000.00) up to and including forty-three thousand five hundred sixty (43,560) square feet (one (1) acre) of impervious area added plus five thousand dollars ($5,000.00) for impervious area added in excess of forty-three thousand five hundred sixty (43,560) square feet (one (1) acre). K is a factor determined by the City. This factor is based upon the net financial gain, which the developer would realize if the detention facility is not built. This amount will generally be equal to the construction cost of the detention facility plus revenue from sale of additional lots or increased value of lots, less the cost of developing the lots, including utilities and streets, financing costs, sales costs and reasonable profit. The City shall evaluate this formula annually and make the appropriate adjustments.~~

~~c. *Criteria for approving an alternative to detention*. The City will evaluate each request for an alternative design or fee in lieu of detention based on the following criteria. The City of Republic reserves the right to set precedent with each case considered depending upon the unique circumstances surrounding each request.~~

~~(1). Size of site in relation to the stormwater generated.*~~

~~(2). Size of the site in relation to the drainage area.*~~

~~(3). Impact on properties downstream of site.*~~

~~(4). Areas of concern as identified by the City of Republic's Stormwater Master Plan.~~

~~(5). Location of the site with respect to floodplains, streams or other large watercourses.~~

~~(6). Location of the site with respect to environmentally sensitive areas.~~

~~(7). Approval of previous requests.~~

~~* Downstream impacts shall generally be considered insignificant when the added upstream impervious area is less than ten percent (10%) of the total contributing watershed area. Exceptions to this rule include development where downstream areas are known to have an imminent flooding hazard as defined in Section **410.690**.~~

~~d. *Residential subdivisions*. Unless otherwise approved by the City, through review of stormwater calculations and criteria referenced herein, detention shall be required in all major residential subdivisions and the fee in lieu of detention established in Section 410.690(C-3(a)) shall apply. Upon request by a developer, the City may consider alternatives to the fee in lieu of detention in cases where it can be proven that the absence of detention will not adversely affect downstream property owners. Each request will be evaluated on a case-by-case basis and a fee in lieu detention may be established for the purposes of regional improvements within the watershed or abroad in the City.~~

~~e. *Justified exceptions*. The City may consider, upon request, a waiver of detention and the fee in lieu for sites, in which the alteration of the site is inconsequential and will not substantially increase the runoff. A justified exception will be granted for sites based on the following criteria.~~

~~(1). Existing sites in which the addition of impervious surface will not increase more that five thousand (5,000) square feet.~~

~~(2). Sites in which existing gravel, chat or stone parking lots or driveways are paved with asphalt cement or concrete surfaces. This shall not apply to parking areas or circulation routes in which vegetation has consumed the site and altered the ability to shed or absorb runoff. The City shall exercise strict discretion with respect to approving exceptions based on these criteria.~~

~~(3). Sites in which a change in use has occurred, that does not increase the impervious area of the site.~~

~~(4). Subdivisions meeting the definition of a minor subdivision or the development of individual single-family residential homes on individual lots in existing subdivisions.~~

~~f. *Procedure*. A request for approval of an alternative to detention must begin with the applicant providing the City with stormwater calculations for the increased runoff from the development. In addition to providing calculations, the applicant must submit a request for alternative design based on the criteria established above. The City Planner will coordinate review of the request with the Public Works Department, City Engineer or other departments impacted by the request. If the City determines the request is justified the City Planner will notify the applicant or his representative of the approval and the fee required in lieu of installing detention.~~

~~g. *Minimum fee in lieu of detention established*. The City of Republic has established a minimum fee of one thousand one hundred fifty dollars ($1,150.00) in lieu providing detention to be paid upon approval by the City.~~

~~4. *Innovation in design*.~~

~~a. It is the desire of the City that detention facilities be designed and constructed in a manner to enhance aesthetic and environmental quality of the City as much as possible.~~

~~b. The City of Republic therefore encourages designs, which utilize and enhance natural settings and minimize disturbance and destruction of wooded areas, natural channels and wetlands.~~

~~5. *Interpretation*.~~

~~a. Interpretations of the detention policy will be made by the City Engineer or City Planner in writing.~~

~~b. Appeals of the decisions of the City Engineer or City Planner may be made, in writing, to the Community Development Director.~~

F. ~~*D.*~~ *Design Criteria*.

1. *General*.
   a. Detention facilities shall discharge into a drainage easement or public right-of-way.
   b. One (1) foot of freeboard shall be provided between the maximum water surface elevation (maximum stage for a one percent (1%) annual probability event) and the minimum top of berm or wall elevation.
   c. Embankment slopes steeper than three (3) horizontal to one (1) vertical (3H:1V) are not permitted.

d. In certain instances, such as when the existing development conditions runoff from a watershed would exceed the capacity of the existing downstream facilities, retention basins (i.e., no outlet or with a release rate at the capacity of the downstream facilities) for the storm runoff may be required by the City.
e. Dry detention basins shall maintain a minimum bottom slope of two (2) feet per hundred (100) feet (two percent (2%)).
f. Trickle channels shall have a minimum slope of one-half (0.5) foot per hundred (100) feet (one-half percent (0.5%)).
g. The maximum allowable depth of ponding for parking lot detention is twelve (12) inches.
h. Parking lot detention may not inundate more than ten percent (10%) of the total parking area.
i. All parking lot detention areas shall have a minimum of two (2) signs posted identifying the detention pond area. The signs shall have a minimum area of one and one-half (1.5) square feet and contain the following message:

WARNING: This area is a storm-water detention pond and is subject to periodic flooding to a depth of twelve (12) inches.

j. The sign shall be reflective and have a minimum height of forty-eight (48) inches from the bottom of the sign to the parking space finished grade. Any suitable materials and geometry of the sign are permissible, subject to approval by the City.

2. *Detailed analysis*.

~~a.~~ **Analysis shall be conducted as outlined in the Stormwater Management and Design Criteria Manual.** ~~Detailed analysis shall be performed using hydrograph methodologies and reservoir routing techniques.~~

~~b. The most common techniques are those developed by the Corps of Engineers and the Soil Conservation Service. These methods are preferred, however other proven techniques will be accepted.~~

~~c. Detention basins designed by detailed methods shall be designed on the basis of multiple storm recurrence frequencies to ensure that they function properly for both frequent storms and large infrequent storms.~~

~~d. A minimum of three (3) recurrence frequencies, the fifty percent (50%), ten percent (10%) and one percent (1%) annual probability storms (the "2-year, 10-year and 100-year" storms) must be considered.~~

~~e. The runoff model must include the entire drainage basin upstream of the proposed detention pond. The model shall be prepared in sufficient detail to ensure that peak runoff rates are reasonably accurate.~~

~~f. The runoff model shall be developed for the following cases:~~

~~(1). Case 1: Existing conditions in the drainage basin prior to development of the applicant's property.~~

~~(2). Case 2: Existing conditions in the drainage basin with developed conditions on the applicant's property.~~

~~(3). Case 3: Fully developed conditions in the entire drainage basin.~~

~~(4). Cases 1 and 2 are utilized to determine the required detention volume and the type of outlet structure to be provided and shall be analyzed for the three (3) storm recurrence frequencies required above.~~

(5). The detention facility shall be designed such that peak outflow rates from the facility for Case 2 are no greater than the rates determined in Case 1 for each of the three (3) storm recurrence frequencies required.

(6). The storage volume provided shall not be less than the difference in total runoff volume between Case 1 and Case 2.

(7). Case 3 is used determine the size of the overflow spillway. Case 3 need only be analyzed for the one percent (1%) annual probability ("100-year").

(8). The overflow spillway will, in most cases, be combined with the outlet structure.

3. *Submittals*. The following information must be submitted for detention ponds designed by detailed methods:

a. Information regarding analytical methods and software to be used, including:

(1). Name of software to be used.

(2). Type and distribution of precipitation input.

(3). Method for determining precipitation losses.

(4). Type of synthetic hydrograph.

(5). Method for routing hydrographs.

(6). Method used for reservoir routing.

b. Map(s) showing sub-basin delineation, topography, presumed flow routes and pertinent points of interest; soil types; existing basin development conditions used in the model; fully developed conditions used in the model.

c. Routing diagram for the runoff model.

d. A summary of sub-basin characteristics used for program input.

e. Stage-area or stage-storage characteristics for the basin in tabular or graphic form.

f. Stage-discharge characteristics for the outlet structure and overflow spillway in tabular or graphic form; hydraulic data for weirs, orifices and other components of the control structure.

g. A printout of the input data file.

h. A summary printout of program output, including plots of hydrographs. (These are intended to be the printer plots generated by the software.)

4. *Simplified analysis*.

a. *Method of evaluation*. Differential runoff rates shall be evaluated by equation:

	R = (Cd X I100) - (Cu X I100)
Where,	R = Differential Runoff Factor
	Cd = Runoff Coefficient for developed conditions
	Cu = Runoff Coefficient for developed conditions
	I100 = Intensity for 100-year storm

b. "C" values shall be determined from the following table:

SUGGESTED RUNOFF COEFFICIENTS	
"C" Value	**Surface Conditions**
.10—.15	Tall grass, brush
.15—.20	Parks, golf courses, farms and one (1) acre single-family residences
.35	Single-family residences on lots of not less than 15,000 sq. ft.
.45	Single-family residences on lots of not less than 10,000 sq. ft.
.47	Single-family residences on lots of not less than 7,500 sq. ft.
.51	Single-family residences on lots of not less than 6,000 sq. ft.
.90	Gravel surfaces.
.95	Asphalt and concrete surfaces.
1.00	Buildings and other structures.

c. *Volume of Detention*. Volume of detention shall be determined according to the "Simplified Volume Formula", as follows:

V = R X A X tc (min.) x 60 (sec./min.)
V = Total volume of detention (cu. ft.)
R = Differential Runoff Factor
A = Area of project in acres
tc = Time of concentration (5 minutes, minimum)

d. *Time of Concentration*.

(1). *SCS Method*. The preferred method for determining time of concentration shall be the method set forth in Chapter 3 of the Soil Conservation Service Technical Release No. 55, "Urban Hydrology for Small Watersheds", 2nd Edition, 1986.

(2). *Other Methods*.

1. Time of concentration may also be calculated by other accepted methods providing reasonable results.
2. The time of concentration used in the formula shall be determined based upon existing conditions.

e. *Rainfall Intensity*. Rainfall intensity shall be determined from Drawing 20.

f. ~~*Required Volume*. The required volume of detention shall be determined from the following Table:~~

~~**Calculated Volume**~~	~~**Required Volume**~~
~~1 cu. ft. thru 500 cu. ft.~~	~~500 cu. ft.~~
~~501 cu. ft. through 5,999 cu. ft.~~	~~Round up to nearest 500 cu. ft.~~
~~5,000 cu. ft. through 9,999 cu. ft.~~	~~Round up to nearest 1,000 cu. ft.~~
~~10,000 cu. ft. thru 49,999 cu. ft.~~	~~Round up to nearest 5,000 cu. ft.~~
~~Above 50,000 cu. ft.~~	~~Round up to nearest 10,000 cu. ft.~~

5. ~~*Control structures*.~~

a. ~~Detention facilities designed by the simplified analysis shall be provided with obvious and effective outlet control structures. These outlet structures may include v-notch weirs or rectangular weirs, as well as pipe. Plan view and sections of the structure with adequate detail shall be included in plans.~~

b. ~~The design discharge (Q) for the low flow outlet shall not exceed the existing runoff for the one-year storm. The maximum discharge shall be designed to take place under total anticipated design-head conditions. The design-head storage volume is not to be considered a part of the volume of detention required.~~

c. ~~Sizing of a low flow pipe shall be by inlet control.~~

d. ~~Low flow pipes shall not be smaller than four (4) inches in diameter to minimize maintenance and operating problems, except in parking lot and roof detention where minimum size and configuration of opening shall be designed specifically for each condition.~~

e. ~~Overflow spillways will be required on all detention facilities, which have storage volumes of one thousand (1,000) or more cubic feet.~~

f. ~~The overflow opening or spillway shall be designed so that the combination flow of the low flow outlet and the flow over the spillway will not exceed the total peak runoff for the improved area. The total peak runoff is to be determined from a 25-year frequency rain for drainage areas less than one (1.0) square mile and from a 100-year frequency rain for drainage areas one (1.0) square miles or greater.~~

410.700 Sinkholes And Karst Features

A. *General.* **Refer to Section 9 of the Stormwater Management and Design Criteria Manual for design criteria involving sinkholes and karst features on a site.**

1. ~~The City of Republic is located on the Springfield Plateau of the Ozarks physiographic region. This area is underlain by Mississippian Age limestone, which is highly susceptible to solutional weathering. As a result, sinkholes, springs and caves are common.~~

2. ~~In many areas of the City special consideration must be given to flood hazards and potential for groundwater contamination due to the presence of sinkholes, caves, losing streams, springs and other features associated with karst geology.~~
3. ~~The requirements set forth herein, are intended to provide specific criteria for design and construction for any site upon which sinkholes or other karst features are located.~~
4. ~~Interpretations of these requirements shall be made and appeals may be made according to the procedures set forth in these Design Criteria.~~

B. *Policy.* In keeping with the intent of the City Development Regulations the following policy is set forth for development in areas containing sinkholes:
   1. Development in sinkhole areas will be based upon the following axioms:
      a. Avoidance.
      b. Minimization.
      c. Mitigation.
   2. Construction in sinkholes shall be avoided. Exceptions will be made only in situations where it can be conclusively demonstrated that there are no practical alternatives to such construction.
   3. These situations are mostly likely to arise where:
      a. An underground cavity has caused a collapsed sinkhole to form, after subdivision approval or building construction.
      b. A sinkhole has been altered or filled either unknowingly or prior to passage of these regulations.
      c. Maintenance and operation is required for existing roads and utilities.
      d. Location of existing streets or utilities would render access or utility service to a property impractical or cost prohibitive.
   4. In these types of cases, measures, which will have minimal impact on the sinkhole or receiving water, may be proposed. Plans for minimal alteration can be approved provided it is conclusively demonstrated that the proposed plan is the minimum practical alternative.
   5. In these cases potential impacts of construction on the sinkhole and receiving waters must be studied and assessed and recommendations made for mitigation of potential impacts upon surface flooding and groundwater quality before the plans can be approved. The degree and sophistication of study required will increase in proportion to the potential impacts. **A remediation plan will need to be submitted for review by the City. The remediation plan will need to be stamped by a Qualified Professional Geotechnical Engineer licensed in the state of Missouri.**

C. Definitions. As used in this Section, the following terms shall have these prescribed meanings:

ALTERED SINKHOLE
A sinkhole that has been filled, excavated or otherwise disturbed.

COLLAPSED SINKHOLE
A subsidence or cave-in of the ground surface caused when soil overburden can no longer be supported by underlying strata due to the presence of subsurface solution cavities.

HEAVY EQUIPMENT
Motorized equipment having a gross weight of more than six (6) tons.

LIGHT EQUIPMENT

Motorized equipment weighing six (6) tons or less.

QUALIFIED GEOLOGIST
A person who has met or exceeded the minimum geological educational requirement and who can interpret and apply geologic data principles and concepts and who can conduct field or laboratory geologic investigations (per RSMo.) and who by reason of experience and education, has an understanding of local karst geology.

QUALIFIED PROFESSIONAL GEOTECHNICAL ENGINEER
A person registered to practice engineering according to the laws of the State of Missouri and who by reason of technical education and experience has a background in the fundamentals of storm drainage and karst **geology.**

SINKHOLE
Any depression in the surface of the ground, with or without collapse of adjacent rock that provides a means through which surface water can come into contact with subsurface water.

Sinkhole depressions may be gradual or abrupt; they may or may not have a well defined eye. While most sinkholes can be defined as the area within a "closed contour", some sinkholes such as those located on the sides of hills may not.

All sinkholes provide discreet points of recharge to groundwater.

SINKHOLE CLUSTER AREA
An area containing two (2) or more sinkholes located in close proximity, generally interconnected by groundwater conduits.

SINKHOLE EYE
Generally, a visible opening, cavity or cave in the bottom of a sinkhole, sometimes referred to as a swallow hole.

SINKHOLE FLOODING AREA
The area inundated by runoff from a storm with an annual exceedance probability of one percent (1%) and a duration of twenty-four (24) hours.

SINKHOLE RIM
The perimeter of the sinkhole depression. The sinkhole rim will generally vary in elevation.

SINKHOLE WATERSHED
The ground surface area that provides drainage to the sinkhole. This area extends beyond the sinkhole depression and generally crosses property boundaries.

TERMINAL SINKHOLE
The lowest sinkhole in a sinkhole cluster to which any surface water overflowing from other sinkholes in the cluster will flow.

UNALTERED SINKHOLE

A sinkhole that has never been altered or disturbed.

D. *Permits Required*.
   1. *Grading permit*. A grading permit must be obtained prior to any alteration of sinkholes associated with new subdivision construction in accordance with the City's Subdivision Regulations. Procedures and requirements for grading permits are set forth in Section **410.710**.
   2. *Other permits*. Other permits from State or Federal agencies may be required, as outlined in Section **410.650** of these Design Criteria, depending upon the size and nature of the proposed activity.

E. *General Plan Requirements*. General requirements for grading and drainage plans are set forth in **the latest version of the Stormwater Management and Design Criteria Manual** ~~Sections **410.670, 410.680**~~ and **Section 410.710** of these Design Criteria.

F. ~~*Sinkhole Evaluation*. An evaluation including the following information shall be made for all sites upon which sinkholes are fully or partially located:~~
   ~~1. The site plan for the proposed development must show the following items with respect to location of proposed construction, proposed or existing property lines and existing structures:~~
      ~~a. Sinkholes.~~
         ~~(1). Location and limits of the area of the sinkhole depression as determined by field surveys or other reliable sources as may be approved. Location of sinkholes based solely upon USGS 7-1/2 Minute Series Quadrangle Maps will not be considered sufficient unless field verified.~~
         ~~(2). Location and elevation of the sinkhole eye where visible or known.~~
         ~~(3). Topographic contours at maximum intervals of two (2) feet and spot elevations sufficient to determine the low point on the sinkhole rim and the profile of the potential overflow area.~~
         ~~(4). Minimum entry elevations of any existing structures located within the sinkhole rim.~~
         ~~(5). Elevation of any roadway located within or adjacent to the sinkhole.~~
      ~~b. *Water supply sources*.~~
         ~~(1). The approximate location of public or private water supply sources such as springs or wells, as determined from information available from the City and Missouri Department of Natural Resources.~~
         ~~(2). Boundaries of any known recharge areas to wells or springs as determined from information available from the City and Missouri Department of Natural Resources.~~
      ~~c. *Other geologic features*. Location of caves, springs, faults and fracture trends, geologic mapping units based upon information from the City or other reliable sources.~~
      ~~d. Flooding limits for the sinkholes determined as set below.~~
   ~~2. A drainage area map showing the sinkhole watershed area. Where the site is located in a sinkhole cluster area, this map shall be extended to include the watershed area any sinkholes located downstream of the site which may receive overflow drainage from the site.~~
   ~~3. Assessment of potential impacts on groundwater quality and proposed water quality management measures as set forth below.~~

~~G. *Flooding Considerations*~~

~~1. *Minimum flooding analysis*.~~

~~a. Maximum estimated flooding elevations shall be determined for each sinkhole for both pre-development and post development conditions, assuming no subsurface outflow from the sinkhole.~~

~~b. Where the estimated volume of runoff exceeds the volume of the sinkhole depression, the depth, spread and path of overflow shall be estimated and shown on the map.~~

~~c. The overflow volume shall be included determining the maximum estimated flooding elevations in the next downstream sinkhole. This analysis shall continue downstream until the lowest sinkhole of the sinkhole cluster is reached or overflow reaches a surface watercourse.~~

~~d. The volume of runoff considered shall be that which results from a rainstorm with an annual probability of one percent (1%) (100-year storm) and a duration of twenty-four (24) hours (eight and two-tenths (8.2) inches for Republic).~~

~~e. The runoff volume shall be determined by the method set forth in Chapter 2 of the SCS TR-55 Manual (Reference).~~

~~f. No further flooding analysis will be required provided that:~~

~~(1). The post-development flooding area of any sinkhole which receives drainage receiving drainage from the site is located entirely on the site.~~

~~(2). A drainage easement covering the post-development flooding area is provided for any off-site sinkhole or portion of a sinkhole which receives increased peak rates of runoff from the site. If the receiving sinkhole is not contiguous to the site, an easement must also be provided for the waterway that connects the site to the sinkhole.~~

~~(3). The minimum entry elevation of any existing structure is at least one (1) foot higher than the estimated flooding elevation from the one percent (1%) annual probability 24-hour storm.~~

~~(4). The flooding depth on any existing public road does not exceed the maximum depths set forth in Section **410.680**.~~

2. ~~*Detailed flooding analysis*.~~

~~a. In cases where the conditions set forth above cannot be met, a detailed flooding analysis will be required if any increase in runoff volume is proposed. For detailed flooding analysis a runoff model must be made for the sinkhole watershed and reservoir routing analysis performed using hydrograph techniques as set forth in Section **410.690**.~~

~~b. The following alternative methods may be used singly or in combination to keep flooding levels at predevelopment levels:~~

~~(1). *Diversion of excess runoff to surface watercourses*. Where feasible, increased post-development runoff may by diverted to a surface watercourse, provided that:~~

~~(A). Any increase in peak runoff rate in the receiving watercourse does not create or worsen existing flooding problems downstream; and~~

~~(B). The diverted stormwater remains in the same surface watershed.~~

~~(C). Storm sewers, open channels and other appurtenances provided for diversions shall be designed in accordance with applicable sections of these Design Criteria.~~

(D). The effect of diverted water on downstream watercourses and developments and requirements for additional detention facilities prior to release of runoff to the surface watercourse shall be determined as set forth in Section **410.690**, Detention Facilities.

(E). Effects of the diversion shall be shown by reservoir routing analysis. Routing of excess runoff shall be considered satisfactory when it can be demonstrated that the post-development flooding elevation in the sinkhole does not exceed the pre-development flooding elevation within reasonable tolerance (generally one-tenth (0.1) foot).

c. *Storage of excess runoff within the sinkhole watershed*.

(1). Where feasible, detention facilities may be constructed within the sinkhole watershed or in perimeter areas of the sinkhole. These detention facilities must be located outside the sinkhole flooding area determined for post-development conditions.

(2). The flooding considerations set forth in this Section will be met if it can be demonstrated that:

(A). Inflow rates to the sinkhole can be reduced to a degree that, in conjunction with the observed outflow rate, the post-development flooding elevation in the sinkhole does not exceed the pre-development flooding elevation within reasonable tolerance (generally one-tenth (0.1) foot).

(B). Sediment and erosion control and water quality considerations as set forth elsewhere in this Section can be satisfied.

H. *Water Quality Considerations.*

1. Sinkholes provide direct recharge routes to groundwater. As a result water quality in wells, caves and springs may be affected by discharge of runoff from developed areas.
2. The Sinkhole Evaluation must consider potential impacts of the proposed construction on receiving groundwater and propose measures to mitigate such impacts.
3. Four (4) primary factors must be considered:
   a. Receiving groundwater use.
   b. Relative groundwater contamination hazard associated with the proposed development.
   c. Ability to capture pollutants.
   d. Management measures to be provided to reduce pollutant levels.

4. *Receiving groundwater use*.

   a. The Sinkhole Evaluation Report shall identify whether the site lies within a critical area based upon information available from the City.

   b. Where disagreements may arise over whether a site is located within a particular recharge area dye tracing may be required for confirmation of the destination of water discharges through a sinkhole.

   c. *Critical areas*. The following areas are classified as critically sensitive to contamination from urban runoff:

      (1). Recharge areas of domestic water supply wells.

      (2). Recharge areas of springs used for public or private water supply.

(3). Recharge areas of caves providing habitat to rare or endangered species such as the Ozark cave fish.

d. *Sensitive areas*. All other sinkhole areas will be classified as sensitive to contamination from urban runoff.

5. *Groundwater contamination hazard*. The relative potential for groundwater contamination will be classified as low, moderate or high depending upon the type of land use, development density and amount of directly connected impervious area. The Sinkhole Evaluation shall identify whether the proposed development poses a low, moderate or high hazard to groundwater uses, as defined below:

a. *Low hazard*. The following land uses are classified as posing a relatively low hazard to groundwater contamination:

(1). Wooded areas and lawns.

(2). Parks and recreation areas.

(3). Residential developments on sewer, provided directly connected impervious areas discharging to the sinkhole is less than one (1) acre.

(4). Low density commercial and office developments provided directly connected impervious areas discharging to the sinkhole is less than one (1) acre.

(5). Discharge from graded areas less than one (1) acre having required sediment controls per Section **410.710**.

b. *Moderate hazard*.

(1). Concentrated discharge from streets and parking lots and roofs and other directly connected impervious areas having an area greater than one (1) acre and less than five (5) acres.

(2). Multi-family residential developments and higher intensity office developments provided the directly connected impervious areas discharging to the sinkhole is less than five (5) acres.

(3). Discharge from graded areas greater than one (1) acre and less than five (5) acres having required sediment controls per Section **410.710**.

c. *High hazard*.

(1). Collector and arterial streets and highways used for commercial transport of toxic materials.

(2). Railroads.

(3). Concentrated discharge from streets and parking lots and roofs and other directly connected impervious areas having an area greater than five (5) acres.

(4). Commercial, industrial and manufacturing areas.

(5). Individual wastewater treatment systems.

(6). Commercial feedlots or poultry operations.

(7). Discharge from graded areas greater than five (5) acres having required sediment controls per Section **410.710**.

6. *Capturing and filtering pollutants*.

a. The majority of sinkholes drain a limited watershed area. For sinkholes where the surrounding drainage area is small enough that the area draining to the sinkhole flows predominantly as "sheet flow", potential impacts on water quality can be addressed by erecting silt control barriers around the sinkhole during construction and providing a vegetative buffer area around the sinkhole to filter out potential contaminants.

b. When the volume of runoff into the sinkhole increases to the point where flow becomes concentrated, the degree of effort required to capture and filter out contaminants increases significantly.

c. Concentrated inflow occurs naturally when the sinkhole watershed area reaches a sufficient size for watercourses leading into the sinkhole to form. Concentrated surface flows result as urbanization occurs due to construction of roads, storm sewers, drainage channels. Subsurface flows can become concentrated through utility trenches.

d. The Sinkhole Evaluation shall include maps showing any existing watercourse which flows into the sinkhole and location of any proposed concentrated storm water discharges into the sinkhole.

7. *Water quality management measures*.

a. *Sediment and erosion control*.

(1). *Non-concentrated flow (sheet flow)*. In critical areas, existing ground cover shall not be removed within twenty-five (25) feet of the sinkhole rim and a silt barrier shall be provided around the outer perimeter of the buffer area.

(2). *Concentrated flow*. A sediment basin will be required at each point where concentrated flows are discharged into the sinkhole. Sediment basins shall be designed according to the procedures set forth in Section **410.710**.

b. *Minimizing directly connected impervious area*.

(1). The groundwater contamination hazard category for impervious areas may be reduced by reducing the amount of Directly Connected Impervious Area. This is the area of roofs, drives, streets, parking lots, etc. which are connected via paved gutters, channels or storm sewers.

(2). Directly Connected Impervious Areas can be reduced by providing properly sized grass swales, vegetative filter strips or other Best Management Practices to separate paved areas.

c. *Diversion of runoff*.

(1). Concentrated discharges to sinkholes can be reduced to manageable levels or avoided by diverting runoff from impervious areas away from sinkholes where possible.

(2). Diversions shall be done in a manner that does not increase flooding hazards on downstream properties and, generally, shall not be directed out of the surface watershed in which the sinkhole is located.

d. *Filtration areas*.

(1). For areas having a low or moderate groundwater contamination hazard and where flow into the sinkhole occurs as sheet flow, water quality requirements can be satisfied by maintaining a permanent vegetative buffer area with a minimum width of thirty (30) feet around the sinkhole.

(2). Use of pesticides and fertilizers will not be permitted within the buffer area. Animal wastes will not be permitted to accumulate in the buffer area.

e. *Grassed swales and channels*.

(1). For areas having a low groundwater contamination hazard concentrated flows from directly connected impervious areas of less than one (1) acre may be discharged into the sinkhole through grassed swales and channels.

~~(2). Swales and channels shall be designed for non-erosive velocities and appropriate temporary erosion control measures such as sodding or erosion control blankets provided.~~

~~f. *Storage and infiltration*.~~

~~(1). Storage and infiltration will be required in the following cases:~~

~~(A). All areas having a high groundwater contamination hazard.~~

~~(B). Areas having a moderate groundwater contamination hazard where concentrated inflow occurs.~~

~~(2). Storage and infiltration basins shall be designed to capture the runoff from storms up to one (1) inch and release runoff over a minimum period of twenty-four (24) hours and maximum period of forty-eight (48) hours.~~

~~(3). Standards outlet structures for sedimentation and infiltration basins are shown in the standard drawings.~~

I. *Development Requirements*.

1. ~~*Stormwater detention in sinkholes*. Where flooding considerations and water quality considerations, as set forth in Section **410.710**, can be met, the volume of runoff storage in sinkholes can be counted toward storm water detention requirements, provided that proper sediment and erosion control measures are provided as set forth in Section **410.710**. The volume of required detention storage shall be determined as set forth in Section **410.690**. Excavation within the sinkhole flooding area to provide additional detention storage will not be allowed.~~
2. ~~*Modification of sinkholes to increase outflow rates*. Increasing outflow rates in sinkholes by excavating the sinkhole eye or installing disposal wells for diverting surface runoff to the groundwater system is prohibited, unless clear and imminent danger to the public health and safety can be demonstrated.~~

1. ~~*3*~~. *Setbacks and use restrictions*.
    a. No new construction of any of the following shall be permitted within thirty (30) feet of the sinkhole rim:
        (1). Residential, commercial or industrial structures.
        (2). Swimming pools.
        (3). Streets, highways or parking lots.
        (4). Storage yards for materials, vehicles and equipment.
        (5). Sanitary sewer lines.
    b. Use of pesticides and fertilizers within thirty (30) feet of the sinkhole rim is prohibited.
    c. Use of heavy construction equipment in unaltered sinkholes is prohibited.
    d. Construction of underground utilities is prohibited within the sinkhole rim.
    e. Recreational facilities such as hiking, jogging and bicycling trails, playgrounds, exercise courses and grass playing fields are permitted within the sinkhole area provided they are not located within the eye of the sinkhole.
    f. Golf courses are permitted subject to approval of a Management Plan for use of pesticides and fertilizers.
    g. Clearing and pruning of trees and undergrowth and limited grubbing of roots is permitted.

h. Landscaping and minor gardening is permitted outside of the sinkhole eye provided erosion and sediment discharge is limited through use of minimum tillage and mulches.
i. Construction of light incidental landscaping and recreational structures such as gazebos, playground equipment, etc. is permitted except in the sinkhole eye.

2. ~~*4. Collapsed sinkholes*~~.
   a. Collapsed sinkholes may be stabilized and filled using approved techniques. A Grading Permit must be issued prior to performing any construction.
   b. The probable cause of the collapse and potential adverse impacts of filling the collapse shall be investigated and information submitted with the Grading Permit application.
3. ~~*5.*~~ *Altered sinkholes*.
   a. Filling or altering of sinkholes without a Grading Permit constitutes a violation of these regulations. In such cases corrective measures must be proposed within the time period specified in the Zoning Regulations for enforcement of such violations. No corrective or remedial measures shall be undertaken until the proposed remediation plan has been reviewed by the City and a Grading Permit issued.
   b. No Building Permits will be issued or zoning or subdivision approvals granted, until the remedial measures specified in the Grading Permit have been completed and approved.

410.710 Grading, Sediment And Erosion Control

~~*A. Goals And Objectives. The goal of the regulation is to effectively minimize erosion and discharge of sediment by application of relatively simple and cost effective Best Management Practices. This goal can be attained by meeting the following objectives:*~~

~~*1. Minimize the area disturbed by construction at any given time.*~~
~~*2. Stabilize disturbed areas as soon as possible by re-establishing sod, other forms of landscaping and completing proposed structures, pavements and storm drainage systems.*~~
~~*3. Provide for containment of sediment until areas are stabilized.*~~
~~*4. Provide permanent erosion controls.*~~

~~*B. General Design Guidelines. The following items must be considered in preparing a sediment and erosion control plan:*~~

~~*1. Temporary versus permanent controls.*~~
~~*a. The greatest potential for soil erosion occurs during construction. Temporary controls are those that are provided for the purpose of controlling erosion and containing sediment until construction is complete.*~~
~~*b. Temporary controls include straw or hay bale dikes, silt fences, erosion control blankets etc., which are not needed after the area is stabilized.*~~
~~*c. Permanent controls consist of riprap, concrete trickle channels, detention basins, etc., which will remain in place through the life of the development.*~~
~~*d. It is possible for the same facility to serve both a temporary and permanent purpose. The difference between temporary and permanent erosion control should be clearly recognized in preparing a sediment and erosion control plan.*~~

~~*2. Sheet flow versus concentrated flow.*~~

~~*a. In areas where runoff occurs primarily as sheet flow, containment of sediment is relatively simple. In these areas straw or hay bales, silt fences and vegetative filter areas can be very effective.*~~

~~*b. Where concentrations of flow occur containment of sediment becomes more difficult as the rate and volume of flow increase. In these areas more sophisticated controls such as sedimentation basins must be provided.*~~

~~*3. Slope. Control of erosion becomes progressively more difficult as the slope of the ground increases. Areas with steeply sloping topography and cut and fill slopes must be given special consideration.*~~

~~*4. Soils and geologic setting. Area soils and the geologic setting must be considered in preparing the plan and any special considerations deemed necessary for a particular site provided.*~~

5. ~~*Environmentally sensitive areas. Where construction occurs within the vicinity of permanent streams, springs, sinkholes, lakes or wetlands, special attention must be given to preventing discharge of sediment.*~~

A. ~~*C.*~~ *Grading Permits*.

1. *Permit requirements*. Grading permits are required for all construction sites with the following exceptions:
    a. Grading for single-family or duplex residences constructed in subdivisions where approved sediment and erosion controls have been constructed.
    b. Emergency construction required repairing or replacing roads, utilities or other items affecting the general safety and well being of the public.
    c. For emergency construction sites which would otherwise be required to obtain a permit and for which remedial construction will take more than fourteen (14) calendar days, application for the permit must be made within three (3) calendar days from the start of construction.
    d. The following activities, provided that they are not located within twenty-five (25) feet of a spring, sinkhole, wetland or watercourse:
        (1) Gardening or landscaping normally associated with single-family residences that cover less than one-half (1/2) acre.
        (2) Grading and repair of existing roads or driveways.
        (3) Cleaning and routine maintenance of roadside ditches or utilities.
        (4) Utility construction where the actual trench width is two (2) feet or less.
2. *Permit procedure*. The following items must be received prior to issuance of a Grading Permit:
    a. An approved grading, sediment and erosion control plan. The submittal and approval procedure is as follows for subdivisions, commercial and other sites.
        (1) The sediment and erosion control plan shall be submitted for review along with the plans for the proposed improvements.
        (2) Grading permits for commercial, multi-family or major subdivisions will be issued by the City Planner after the project plans have been approved.
3. *Plan requirements*. Plans must be prepared by and bear the seal of~~,~~ an engineer registered to practice in the State of Missouri. Plan requirements are set forth in ~~Section~~**Chapter 410~~410.660~~** and in this Section. Plans will not be required in the following cases:
    a. Grading associated solely with a single-family residence.

b. Grading or filling of less than one (1) acre if located outside of the allowable building areas and not located within twenty-five (25) feet of spring, sinkhole, wetland or watercourse. In these instances a grading permit can be issued, providing an inspection of the site by a representative of the City does not reveal conditions that would warrant preparation of a detailed plan.

B. ~~*D. Other Permits*~~.

1. *NPDES storm-water permit*. ~~Effective October 1, 1992, construction~~ sites where the area to be disturbed is five **(1)**~~(5)~~ acres or more must apply for a storm-water discharge permit from the Missouri Department of Natural Resources. Permit requirements are set forth in 10 CSR 20-6.200 of the Missouri Clean Water Laws.
2. *"404" permit*. Grading activities in streams or wetlands may require a Department of the Army Permit under Section 404 of the Clean Water Act.

C. ~~*E. Design Standards And Criteria*~~. **Refer to Republic Stormwater Design for Design Standards and Criteria relating to Grading, Sediment and Erosion Control.**

1. ~~*Grading.*~~

~~a. *Maximum grades*. Cut or fill slopes shall not exceed four (4) to one (1).~~

~~b. *Maximum height*. Cut or fill slopes shall not exceed fifteen (15) feet in vertical height unless a horizontal bench area at least five (5) feet in width is provided for each fifteen (15) feet in vertical height.~~

~~c. *Minimum slope*. Slope in grassed areas shall not be less than one percent (1%).~~

~~d. *Construction specifications*. Construction for streets must comply with specifications set forth by the City of Republic. For all other areas, construction specifications stating requirements for stripping, materials, subgrade compaction, placement of fills, moisture and density control, preparation and maintenance of subgrade must be included or referenced on the plans or accompanying specifications submitted.~~

~~e. *Spoil areas*.~~

~~(1) Broken concrete, asphalt and other spoil materials may not be buried in fills within proposed building or pavement areas.~~

~~(2) Outside of proposed building and pavement areas, broken concrete or stone may be buried in fills, provided it is covered by a minimum of two (2) feet of earth.~~

~~(3) Burying of other materials in fills is prohibited.~~

~~f. *Stockpile areas*. Location of proposed stockpile areas shall be outlined on the plans and specifications for proper drainage included.~~

~~g. *Borrow areas*. The proposed limits of temporary borrow areas shall be outlined in the plans and a proposed operating plan described on the grading plan. Temporary slopes in borrow areas may exceed the maximums set forth above. At the time that borrow operations are completed, the area shall be graded in accordance with the criteria set forth above and reseeded.~~

~~2. *Sediment containment*.~~

~~a. *Existing vegetative filter area*. Existing vegetative filter areas may be used where:~~

~~(1) Unconcentrated sheet flow occurs;~~

~~(2) An area of existing vegetation a minimum of twenty-five (25) feet in width can be maintained between the area to be graded and a property line, watercourse, sinkhole, spring, wetland or classified lake;~~

~~(3) Existing ground slope is no greater than five (5) to one (1) (twenty percent (20%));~~

(4) The existing vegetative growth is of sufficient density and in sufficiently good condition to provide for filtration of sediment.

(5) Vegetative filter areas are a temporary and permanent practice.

b. *Hay/straw bale dike or silt fence*. Containment areas constructed of hay or straw bales or silt fence may be provided in areas where:

(1) Unconcentrated sheet flow occurs,

(2) An area of existing vegetation a minimum of twenty-five (25) feet in width cannot be maintained between the area to be graded and a property line, watercourse, sinkhole, spring, wetland or classified lake,

(3) Existing ground slope is no greater than five (5) to one (1) (twenty percent (20%)),

(4) Concentrated flow from an area no greater than one (1) acre occurs and a minimum volume of one thousand (1,000) cubic feet per acre is contained behind the dike. Either cereal grain straw or hay may be used for bale dikes. Straw/hay bale dikes shall be constructed as shown in Drawing 50. Straw/hale bale dikes and silt fences are temporary practices.

c. *Temporary containment berms*.

(1) Temporary containment berms may be provided for areas where concentrated flow from areas greater than one (1) acre and less than five (5) acres occurs. Temporary containment berms must contain a volume of one thousand (1,000) cubic feet per acre of drainage area.

(2) Temporary containment berms shall have a riprap outlet with a sediment filter as shown in Drawing 40 or a perforated pipe outlet as shown in Drawing 80.

(3) Details for temporary containment berms are shown in Drawing 30.

(4) Temporary containment berms and accumulated sediment may be completely removed after the tributary area is stabilized and must be removed prior to final acceptance and release of escrow.

d. *Sedimentation basin*.

(1) Sediment basins shall be provided for all areas where concentrated flow occurs from an area of five (5) or more acres. Sediment basins shall be designed to detain the runoff from one (1) inch of rainfall for a period of at least twenty-four (24) hours.

Runoff shall be calculated using the methods contained in Chapter 2 of TR-55 (Reference 11), using the recommended curve number for newly graded areas from Table 2-2a.

Note: For construction sites in Republic an average value of runoff volume from one (1) inch of rainfall is approximately one thousand two hundred (1,200) cubic feet per acre, using a Curve Number of 90, as indicative of a mixture of type B and C soils. This value may be used in sizing sediment basins or the runoff volume determined using the values from Figure 2-1 of TR-55.

(2) Sediment basins shall be provided with an outflow structure consisting of:

(A). A flow restriction device which provides for the required detention time,

(B). An outfall pipe sized to carry the maximum estimated outflow rate,

(C). Protective structures at the pipe outlet to prevent crushing or damage of the end of the pipe,

(D). Protective structures to prevent blockage of the pipe with debris,

(E). Erosion protection at the pipe outlet. A typical outlet structure is shown in Drawing 140.

(3) An overflow spillway capable of discharging the peak flow rate for the four percent (4%) annual probability (25-year) storm while maintaining a minimum freeboard of one (1) foot.

(4) Overflow spillways may be sodded where the depth of flow at the crest is limited to no greater than six (6) inches and outlet channel velocities do not exceed five (5) feet per second for the minor (5-year) storm.

(5) Overflow spillways not meeting these restrictions must be constructed of riprap, concrete or other approved, non-erodible material.

3. *Erosion protection.*

a. *Seeding and mulching.*

(1) *Permanent seeding*. Permanent seeding fertilizer and mulch shall be applied at the rates set forth in Drawing 10 or according to other specifications, which are approved with the Grading Permit.

(2) Permanent seeding seasons are from March first (1st) to May fifteenth (15th) and August fifteenth (15th) to October fifteenth (15th).

(3) *Mulching.* Where slopes are less than four (4) to one (1), cereal grain mulch is required at the rate of one hundred (100) pounds per one thousand (1,000) square feet (four thousand five hundred (4,500) pounds per acre). Cereal grain mulch shall meet the requirements of Section 802 of the State Specifications (Reference 17) for Type 1 mulch.

(4) Where slopes are four (4) to one (1) or greater Type 3 mulch ("hydromulch") meeting the requirements of Section 802 of the State Specifications (Reference 17) shall be used.

(5) *Temporary seeding*. Whenever grading operations are suspended for more than thirty (30) calendar days between permanent grass or seeding periods, all disturbed areas must be reseeded with temporary cover according to Drawing 10. Temporary seeding season runs from May fifteenth (15th) to November fifteenth (15th).

(6) *Overseeding.* During the winter season (November fifteenth (15th) to March first (1st)) temporary seed and mulch shall be placed in on all completed areas or areas where grading is suspended for more than thirty (30) calendar days. During this period seed, mulch and soil amendments shall be applied at the following rates: Lime: 100% of specified quantity.* Fertilizer: 75% of specified quantity. Seed: 50% of specified quantity. Mulch: 100% of specified quantity. * Per Drawing 10. Areas seeded during this period shall be reseeded and mulched during the next permanent seeding season according to seeding requirements.

(7) *Maintenance*. Seeded areas must be maintained for one (1) year following permanent seeding.

b. *Cut and fill slopes*. Cut and fill slopes shall be protected from erosion by construction of straw bale dikes, silt fences, diversion berms or swales along the top of the slope.

(1) Where drainage must be carried down the slopes, pipe drains, concrete flumes, riprap chutes or other impervious areas must be provided. Suitable erosion control measures such as riprap stilling basins, must be provided at the bottom of the slope.

(2) Diversions shall be maintained until permanent growth is firmly established on the slopes.

(3) Typical diversion details are shown in Drawing 30. Riprap chute details are shown in Drawing 70.

c. *Channels and swales*. Permanent channels and swales shall be provided with a stabilized invert consisting of one of the following materials:

(1) *Sod*. Where the average velocity of flow is five (5) feet per second or less and there is no base flow, the channel shall be lined with sod.

(A). For channels with a bottom width less than fifteen (15) feet, sod shall extend up the side slope to a minimum height of six (6) inches above the toe. (Drawing 90).

(B). Channels with a bottom width of fifteen (15) feet or greater, shall be graded as shown in Drawing 90 and a low flow area, fifteen (15) feet in width lined with sod.

(C). The remainder of the channel slopes shall be seeded and mulched as provided above.

(2) *Erosion control blanket*. Commercial erosion control blankets may be used in lieu of sod provided that samples are submitted and approved by the City. The guaranteed maintenance period shall be one (1) year.

(3) *Non-erosive lining*. In grass channels where base flow occurs, a non-erosive low-flow channel of riprap or concrete must be provided. Low flow channels shall have a minimum capacity of five (5) cubic feet per second. Other suitable non-erosive materials may be specified with approval of the City.

(4) For channels which have an average velocity of five (5) feet per second or greater a non-erosive lining of riprap concrete or other approved material must be provided.

d. *Storm sewer and culvert outlets*. Erosion protection shall be provided at storm sewer and culvert outlets. Minimum erosion protection shall consist of a concrete toe wall and non-erosive lining, meeting the City's specifications for public improvements.

(1) The required length of non-erosive lining will not be decreased where flared end sections or headwalls are provided unless calculations and data to support the decrease in length are submitted and approved.

(2) Non-erosive lining shall consist of riprap, unless otherwise specified and approved. Field stone, gabions or riprap shall extend to the point at which average channel velocity for the peak flow rate from the minor (5-year) storm has decreased to five (5) feet per second maximum.

(3) The length of riprap to be provided shall be as follows: (See Drawing 120)

Average outlet velocity less than five (5) feet per second:
L = three (3) times the pipe diameter or culvert width.

Average outlet velocity less than five (5) to ten (10) feet per second:
L = length determined using Drawing 120.

Average outlet velocity greater than ten (10) feet per second:

(4) Use MHTD standard energy dissipater headwall. (Reference 17) The height of erosion protection shall be as shown in Drawing 120.

(5) Minimum toe wall dimensions are shown in Drawing 120. Where headwalls or flared end sections are specified, toe walls must be provided at the downstream end.

e. *Curb openings*. Where drainage has been approved by the City to flow from paved areas to grass areas through curb openings erosion protection shall be provided as shown in Drawing 130.

f. *Ditch checks and drop structures*. In grass channels grades and velocities may be controlled by use of ditch checks and drop structures. Riprap ditch checks may be required in natural channels where average velocity for the peak flow rate from the 5-year storm exceeds five (5) feet per second for post-development conditions.

g. *Spillways.* Erosion protection must be provided at spillways and outlet structures for detention ponds. Erosion protection shall extend to the point where flow has stabilized and average velocity in the outlet channel is five (5) feet per second or less.

4. *Temporary construction entrance*.

a. A minimum of one (1) temporary construction entrance is required at each site. Additional temporary entrances may be provided if approved. The location of each construction entrance shall be shown on the plan.

b. Only construction entrances designated on the sediment and erosion control plan may be used. Barricades shall be maintained if necessary to prevent access at other points until construction is complete.

c. Construction entrances shall be constructed of crushed limestone meeting the following specifications:

(1) Construction entrances shall be a minimum of twenty-five (25) feet wide and fifty (50) feet long.

(2) Minimum thickness of crushed limestone surface shall be six (6) inches. Additional two (2) inch lifts of crushed limestone shall be added at the discretion of the County if the surface of the initial drive deteriorates or becomes too muddy to be effective.

(3) In locations where an existing drive or street extends at least fifty (50) feet into the site, the existing drive may be designated as the construction entrance and construction of a new gravel entrance is not required, unless job conditions warrant as set forth in the preceding paragraph.

~~5. *Cleaning streets*. Streets both interior and adjacent to the site shall be completely cleaned of sediment at the end of construction and prior to release of security.~~

~~6. *Dust control*. The contractor will be required to use water trucks to water all roads and construction areas to minimize dust leaving the site when conditions warrant.~~

~~7. *Sequencing and scheduling*. Costs of sediment and erosion control can be minimized if proper consideration is given to sequencing and scheduling construction. Any special sequencing and scheduling considerations should be noted in the grading plan. A detailed schedule must be received from the contractor at the Pre-Construction Conference.~~

EXPLANATION(S) - Matter in **underlined** type in the above is added language. Matter in ~~strikethrough~~ in the above is deleted.

Section 2: All other Sections of the Municipal Code of the City of Republic, Missouri, not specifically referenced in this Ordinance shall remain unmodified and in full force and effect.

Section 3: All ordinances and parts of ordinances in conflict herewith are hereby repealed.

Section 4: The City Administrator or his/her designee, on behalf of the City, is authorized to take the necessary steps to execute this Ordinance.

Section 5: The WHEREAS clauses above are specifically incorporated herein by reference.

Section 6: The provisions of this Ordinance are severable, and if any provisions hereof are declared invalid, unconstitutional, or unenforceable, such determination shall not affect the validity of the remainder of this Ordinance.

Section 7: This Ordinance shall take effect and be in force from and after its passage as provided by law.

PASSED AND APPROVED at a regular meeting of the City Council of the City of Republic, Missouri, this _____ day of _____, 2023.

_____
Attest: Matt Russell, Mayor

_____
Laura Burbridge, City Clerk

Approved as to Form:



Megan McCullough, City Attorney

Final Passage and Vote:

410.010 Jurisdiction

The rules and regulations governing plats of subdivisions of land**,** ~~and~~ lot splits**, and lot combinations** contained herein shall apply within the corporate limits of the City of Republic in accordance with the provisions of Section 89.400, RSMo.

410.020 Definitions

For the purpose of interpreting these regulations, certain words and terms are defined as follows:

ADOPTED PLANS

Any plans, maps, or supporting documentation adopted by the City Council as ordinance(s).

ALLEY

A passage or way affording generally a secondary means of vehicular access to the back or side of abutting properties and is not intended for general traffic circulation.

AS-BUILT PLANS

A plan representing the construction of the actual infrastructure built within the subdivision as it relates to the approved construction plans as well as serving as official public notice of all finish floor elevations.

BLOCK

A tract of land entirely surrounded by public highways, streets, waterways or railway rights-of-way, etc., or any combination thereof.

BUILDING OFFICIAL

The Building Official of the City of Republic, Missouri, or whomever shall be designated as building official.

BUILDS DEPARTMENT ADMINISTRATOR

The Administrator of the BUILDS Department of the City of Republic, Missouri.

CITY

The City of Republic, Missouri.

CITY COUNCIL

The City Council of the City of Republic, Missouri.

CITY ENGINEER

The City Engineer of **the City of** Republic, Missouri, or whomever shall be designated as engineer.

COMPREHENSIVE PLAN

The Comprehensive or Master Plan of the City of Republic, Missouri, whether in whole or in part, as adopted by the Republic Planning **and Zoning** Commission and the City Council and duly recorded by the office of the County Recorder of Greene County.

CITY INSPECTOR

The Construction Inspector of the City of Republic, Missouri, or whomever shall be designated as construction inspector.

COUNTY

Greene County, Missouri**, unless otherwise specified**.

COUNTY CLERK
The office of the Greene County Clerk**, unless otherwise specified**.

CUL-DE-SAC
A short street having one (1) end open to traffic and being terminated at the other end by a vehicular turnaround.

DEVELOPER
See "Subdivider".

DEVELOPER'S AGREEMENT
Agreement between the City of Republic and Developer entered into by City Council.

DIGITAL COPY

A Portable Document Format (PDF) file providing an electronic image of text of text and graphic that looks like a printed document and can be viewed, printed, and electronically transmitted.

EASEMENT
A grant by the property owner of the use, for a specific purpose or purposes, of a strip of land by the general public, utility companies or private individuals.

IMPROVEMENTS
Grading, street surfacing, curbs and gutters, sidewalks, crosswalks, culverts, bridges, water, sanitary and storm sewers, lines, and other utilities, and other required features.

LOT
A parcel of land occupied or intended for occupancy by a building or an integrated group of buildings and uses customarily incidental, including such open spaces as are required by the Zoning Code.

OPEN SPACE, PUBLIC
Land which may be dedicated or reserved for acquisition for general use by the public, including parks, recreation areas, school sites, community or public building sites, and other such areas that shall be deemed necessary.

PLANNING COMMISSION
The City Planning **and Zoning** Commission of Republic, Missouri.

PLANNING COMMISSION REPRESENTATIVE
The ~~City~~ **Principal** Planner, or his/her designee, in matters pertaining to the subdivision of land.

PLAT, FINAL
A complete and exact subdivision plat prepared for official recording as required by Statute and ordinances of the City of Republic to define property boundaries ~~and proposed streets and improvements~~**necessary for the transfer of title by lot and dedication of streets and easements.**

PLAT, PRELIMINARY
A preliminary plat for a subdivision shall **consist of preliminary survey plan and a preliminary engineering plan and shall meet the requirements herein.**~~be a formal plan, drawn to scale, indicating prominent existing features of a tract and its surroundings and the general layout of the proposed subdivision and shall meet the requirements herein.~~

PRE-APPLICATION SKETCH
A general drawing or sketch and discussion showing the general layout and characteristics of the proposed subdivision.

PRELIMINARY ENGINEERING PLAN
A preliminary plan for a subdivision shall be a formal plan, drawn to scale, indicating prominent existing and proposed features of the tract and its surroundings, and the general layout of the proposed infrastructure for the subdivision, and shall meet the requirements herein.

PRELIMINARY SURVEY PLAN
A preliminary plan for a subdivision shall be a formal plan, drawn to scale, indicating prominent existing and proposed features of the tract and its surroundings, and the general layout of the proposed infrastructure for the subdivision, and shall meet the requirements herein.

PRINCIPAL PLANNER
The Principal Planner of the City of Republic, Missouri, or whomever shall be designated by the BUILDS Administrator as Principal Planner.

RIGHT-OF-WAY
~~The land opened, reserved or dedicated for a street, walk, drainage or other public purpose.~~**All land considered as City controlled space by virtue of ordinance, dedication, easements, platting, or other written instruments providing the City control over others usage thereof.**

SUBDIVIDER
A person, firm or corporation undertaking the subdividing or resubdividing of a lot, tract or parcel of land into two (2) or more lots, or other subdivisions of land for the purpose of transfer of ownership or development, whether immediate or future, including all changes in street or lot lines.

SUBDIVISIONS (General)
The subdivision of land shall be deemed to be the division of any parcel or tract of land into two (2) or more parcels, sites or lots, ~~any one (1) of which contains less than five (5) acres~~ for the purpose, whether immediate or future, of transfer of ownership or development, provided however, that the following shall not constitute a subdivision: transfer of interests by will or pursuant to court order; leases for a term not to exceed ten (10) years; mortgages or easements; and the sale or exchange of parcels of land between owners of adjoining property if additional lots are not thereby created, and the lots resulting are not reduced below the size required by law.

SUBDIVISION (Minor)
Notwithstanding other definitions of this Chapter, a minor subdivision is defined as any division of land which creates not more than four (4) tracts.

SUBDIVISION (Major)
Notwithstanding other definitions of this Chapter, a major subdivision is defined as any division of land into five or more lots, shall include the construction and dedication of public infrastructure, shall follow the preliminary/final plat procedure and shall be regulated by the provisions of Articles **III, IV** and **V** of this Chapter.

410.030 No Contract Of Sale

Whoever, being the owner or agent of the owner of any land located within the City of Republic, transfers or sells or agrees to sell or negotiates to sell any land covered by the provisions of Articles **II** — **V** of this Chapter before a subdivision plat has been approved by the City Council and recorded or filed in the office of the Recorder of Deeds of Greene County shall forfeit and pay a penalty, as provided for in the fee schedule found in Section 805.050 of this code, for each lot or parcel so transferred or sold or agreed or negotiated to be sold. The City of Republic enjoin such transfer or sale or agreement by action for injunction brought in any court of equity jurisdiction or may recover the said penalty by a civil action in any court of competent jurisdiction.

410.040 Interpretation And Conflict With Other Laws

This Chapter shall not apply to any lot or lots forming a part of a subdivision created and recorded prior to the adoption of this code, except for further dividing of existing lots, or the addition of improvements not authorized or approved under previous platting. This Chapter is not intended to repeal, abrogate, annul or in any way impair or interfere with existing provisions of other ordinances, or regulations, private agreements, or with recorded restrictive covenants running with the land to which the City of Republic is a party. Where this Chapter imposes a greater restriction upon land than is imposed or required by previous ordinances of the City of Republic, the provisions of this Chapter shall prevail.

410.050 Administration

The provisions of this Chapter shall be administered in accordance with Chapter 89, RSMo., as amended, and shall be administered by the Planning and Zoning Commission, the City Administrator, **the BUILDS Administrator** ~~the City Planner or Building Official~~ or their ~~delegate~~ **designee, t**he Mayor, and the City Council.

410.060 Fees

The fees for the review of plans and plats and other sundry costs shall be paid to the City by the developer upon submitting a request or application for approval by the City.

410.070 Conformity With Zoning Code

All plats reviewed under provisions of this Chapter shall conform to all Zoning Code provisions for the district in which the proposed plat is to be located. All required zoning changes shall be made prior to approval of the Record Plat.

410.075 Stop Work

A. *Authority*. Whenever the ~~City Planner~~ **BUILDS Administrator** or his/her designee finds any work regulated by this Code or the associated regulations being performed in a manner contrary to the provisions of this Code or in a dangerous or unsafe manner, the **B**~~b~~uilding **O**~~o~~fficial is authorized to issue a stop work order.

B. *Issuance*. The stop work order shall be in writing and shall be given to the owner of the property involved, or to the owner's agent, or to the person doing the work. Upon issuance of a stop work order, the cited work shall immediately cease. The stop work order shall state the reason for the order, and the conditions under which the cited work will be permitted to resume.

C. *Unlawful Continuance*. Any person who shall continue any work after having been served with a stop work order, except such work as that person is directed to perform to remove a violation or unsafe condition, shall be subject to penalties as prescribed by law.

410.080 Denial Of Utility Service, Permits And Plat Approval

A. *Permits*. No building permits shall be issued for any structure on a lot in a subdivision for which a plat has not been finally approved and recorded in the manner prescribed herein.
B. *Denial Of Utility Service, Plat Approval And/Or Building Permits*. To promote and ensure the public health, safety and welfare, the City shall have the authority by written order to deny the connection of utility service, plat or plan approval and/or building permits on the grounds that non-compliance with City regulations, adopted ordinances and/or policies have occurred.

410.090 Compliance With Design Principles Required

In planning and developing a subdivision the developer shall comply with the general principles of design and minimum requirements for the layout of subdivisions set forth in Article **VI**, and with the rules and regulations concerning required improvements set forth in Article **IV**, in these regulations, and in every case shall pursue the procedure in the following Sections. Approval of any plat or plan by the City shall not relieve the subdivider or developer from complying with the regulations established herein.

410.100 Platting Exceptions

A. The requirements of this Chapter do not apply to the following types of land subdivision:
~~1. Recording of a subdivision plat shall not be required in case of the sale or exchange of parcels of land between owners of adjoining properties for the purpose of adjustments in boundaries, provided that: additional lots are not thereby created; that the original lots are not reduced below the minimum sizes required by this Chapter or the Zoning Code; and that a survey of the adjustments of boundaries is recorded with the County Recorder.~~

1. ~~2.~~ The conveyance of parcels of land or interests therein for use as a right of way for railroads or other public utility facilities or other pipe lines which do not involve any new streets or easements of access.
2. ~~3.~~ The conveyance of land for highway or other public purposes or grants or conveyance relating to the vacation of land impressed with a public use.
3. ~~4.~~ Conveyances made to correct description of prior conveyances.

Article 410-II Minor Subdivisions

410.110 Minor Subdivisions

A. All subdivisions of land, not otherwise classified as a major subdivision **and regardless of the size of the area of land to be subdivided**, shall be classified as a minor subdivision and shall be subject to the procedures described in this Article. Applications for minor subdivisions will be reviewed **by the BUILDS Department**, ~~considered, and forwarded to the Planning and Zoning Commission~~ based on the following qualifications:
    1. The proposed subdivision will not create more than four tracts of land, including the remainder to be retained by the owner.
    2. The proposed subdivision does not include the dedication of a new street or other public right-of-way or change in existing streets, general utility easements, water, sewer or other public improvements. It is the intent of this provision to limit approval of minor subdivisions to those cases where the improvements required by these regulations have been provided, with exception to the extension of service to individual lots. It is not the

intention of this provision to permit all requests, based solely requests that meet the minimum standards.

3. The subdivision is in compliance with the Zoning Code and other ordinances and regulations of the City of Republic and no substandard tract, parcel or lot will be created.
4. The subdivision will not result in substantial increases in service requirements (e.g., utilities, traffic control, parks, schools, streets, etc.), nor interfere with the maintenance of existing service levels (e.g., additional curb cuts, repaving, etc.) as~~d~~ determined by the BUILDS Administrator or their designee.
5. The parent tract was lawful under these regulations at the time the existing property description was recorded.
6. The configuration of the property was created by a court decree or order resulting from testamentary or interstate provisions.
7. The configuration of the property was created by the assembly or combination of existing tracts of record.
8. Minor subdivisions shall be limited so that no more than four (4) new tracts or parcels of land are created ~~by minor subdivision~~ from the original parent tract or parcel as that tract or parcel was at the time of annexation, or else as the parcel was platted within a major subdivision in the interest of preventing the circumvention of the major subdivision process. Upon a request for a second (2nd) minor subdivision of a tract or parcel previously subdivided into fewer than four (4) new tracts or parcels, **the BUILDS Department may request that City** Council ~~may~~ authorize staff by resolution to execute a subsequent minor subdivision that otherwise meets the minor subdivision requirements.

410.120 Minor Subdivisions Procedures

A. *Filing Procedures*. The applicant shall submit a **digital**~~minimum of five (5)~~ cop**y**~~ies~~ of the proposed minor subdivision ~~or more, as required by theCommunity Development Department~~, a completed application form and applicable application fees, as provided for in the fee schedule found in Section 805.050, to the Republic ~~Community Development Department~~**BUILDS Department**. ~~A completed minor subdivision checklist shall accompany all applications for subdivision.~~

B. *Review Criteria And Procedures*. An application for minor subdivision shall be reviewed for conformance with the City's zoning and subdivision regulations. The ~~Community Development~~**BUILDS** Department staff~~, public works staff and the City Engineer~~ shall use the following criteria to review the minor subdivision for its conformance and shall ensure the development in the proposed location:

1. Will be in conformity with the Comprehensive Plan, thoroughfare plan, zoning regulations or other plans officially adopted by the Planning and Zoning Commission and the City Council~~;~~.

C. *Effect Of Minor Subdivision Approval*. Minor subdivision approval shall confer upon the developer the right that the City will not change the general terms and conditions under which the approval was granted. Within sixty (60) days after approval of the plat by the ~~Community Development Department~~**BUILDS Department** staff, the subdivider shall file said plat with the County Recorder. The subdivider shall pay the cost of recording the plat~~, easements, right-of-way deeds~~ and any other related accompanying documents. If the plat is disapproved, the ~~Community Development~~**BUILDS** Department staff shall notify the applicant in writing of the actions and reasons therefore. If the applicant shall fail to record the plat within sixty (60) days, then the plat shall be held for naught.

D. *Information Required*. The following information is required on all minor subdivision plats submitted for approval. The required information may be combined for presentation on one (1) or more drawings or maps. In the interests of clarity, speed and efficiency in the review process, ~~Community Development~~**BUILDS Department** ~~–~~staff may require that the information be presented on separate or additional drawings or maps. In all cases the minor subdivision plat submission shall be designed in conformity with the Republic Zoning Code, Chapter **405**, and shall include the following information:

1. The proposed subdivision name, the general location, as it is commonly known, or by some other name by which the project may be identified, the name and address of the present owner and sub divider and the surveyor. The City shall supply a case number identifying the minor subdivision prior to submission.
2. Title, **bar** scale, north arrow, date of preparation and each date~~,~~ which a revision was made.
3. Location by section, township, range, City, County, State or if a re-subdivision of an existing or approved subdivision, then by lot or block numbers and name of original subdivision.
4. The names, location and dimensions of adjacent streets within any adjoining subdivision.
5. **The accuracy class of property shall be noted on the plat as Urban Class property or Rural Class property.**
    a. **For Urban Class property the uncertainty due to random errors of any dimension or direction, distance or coordinate shown on the plat shall not exceed fifty parts per million (50 ppm) or one-tenth of a foot (0.10') for distances less than two thousand feet (2,000') at the sixty-eight percent (68%) confidence level [one (1) sigma].**
    b. **For Rural Class property the uncertainty due to random errors of any dimension or direction, distance or coordinate shown on the plat shall not exceed one hundred parts per million (100 ppm) or one tenth of a foot (0.10') for distances less than one thousand feet (1,000') at the sixty-eight percents (68%) confidence level [one (1) sigma].**
6. ~~5.~~ The plat ~~boundaries~~ shall show the ~~external~~ bearings **of all boundary lines, and** distances ~~and internal angles~~ **shall be displayed** ~~with~~ dimensione**d**~~s~~ in hundredths of **a foot**~~feet. A minimum closure of one tenth of a foot (0.10) or 1:20,000 for distances greater than two thousand (2,000) feet (minimum standards for urban class property survey) to close the traverse within a maximum of one (1) foot in 10,000 feet.~~ All bearings shall be ~~obtained~~ **on Grid North and by means of GPS, or optical instruments using celestial or solar observations.**~~by determination of true north by solar or celestial observation.~~
7. ~~6.~~ The boundary lines, location and dimensions **by bearings and distance** of ~~existing and~~ newly created tracts, parcels or lots that are part of the minor subdivision shall be shown on plat. ~~The dimensions and location of all arcs, radii, internal angles, points of curvature and tangent boundaries and other pertinent survey information necessary to an accurate description and location.~~ Survey data shall meet **all applicable portions of** the **current** ~~standards promulgated by the State of Missouri,~~ "Missouri **Standards for Property Boundary Surveys" as promulgated by the Departments of Agriculture, Division of Weights, Measures and Consumer Protection**~~Minimum Standards for Property Boundary Surveys", Division of Geology and Land Survey, Missouri Department of Natural Resources~~. All survey datum shall be vertically **tied to the NAVD 88 datum and shall graphically show a** horizontal~~ly~~ tie~~d~~ to **two subdivision corners by bearing and distance**

from the nearest published GRS monument which name and/or designation number, date of adjustment and coordinates shall be noted. If the MoDOT Real Time Network is used in lieu of a GRS monument, then a statement to that effect shall be noted along with the epoch/date of subdivision control. Also, State Plane Coordinates of at least two external boundary corners of subdivision shall be shown~~the Missouri Geographical Reference Stations (GRS)~~.

8. ***Curve Data.*** **When a boundary line is on a circular curve, the curve data shall be shown in place or on an included Curve Table.**
    a. **Curve data shown shall consist of at least the following: curve number/name if table is used, delta or central angle, radius, arc length, chord length, and bearing.**
    b. **Non-tangent curves shall be noted in place or within a Curve Table and shall show: Central Angle rather than Delta, bearing from radius point to point of curvature, and all other curve components mentioned in the above provision.**
9. ~~7.~~ Names of adjacent subdivisions and owners of adjoining parcels of **land not** ~~un~~subdivided ~~land~~.
10. ~~8.~~ The exact location and distances of all structures and other physical improvements in relation to proposed lot lines.
11. ~~9.~~ The extent and location of floodplains, floodways, or other waterways of record; elevations of which, shall be based on applicable Flood Insurance Studies, Flood Insurance Rate Maps, Flood Boundary and Floodway Maps.
12. ~~10.~~ Location of sanitary sewer, storm sewers, water mains, gas lines, fire hydrants, electric and telephone poles and street ~~-~~lights.

~~13. 11. Topography, contours at vertical intervals shall be shown as follows:~~
~~a. Average slope less than six percent (6%) — two (2) foot interval contour map~~
~~b. Average slope over six percent (6%) — five (5) foot interval contour map~~

13. ~~12~~. Existing zoning classification of the minor subdivision and adjacent area.
14. ~~13.~~ Setback lines on all lots and other sites.
15. ~~14~~. Certification by Missouri **Professional Land Surveyor** ~~registered land surveyor~~ as to accuracy of survey as such:
    That I, _____, do hereby certify that this plat was prepared under my supervision from an actual survey of the land herein described prepared by _____ dated _____ and signed by _____ P.L.S. No. _____ and that the corner monuments and lot corner pins shown herein were placed under the personal supervision of _____ P.L.S. No. _____ in accordance with ~~the~~**all applicable portions of the current Missouri Standards for Property Boundary Surveys as promulgated by the Department of Agriculture, Division of Weights, Measures and Consumer Protection.** ~~Division of Geology and Land Survey, Missouri Department of Natural Resource's "Minimum Standards for Property Boundary Surveys".~~
    Date Prepared: _____
    Signature: _____
    Missouri P.L.S. No. _____
16. ~~15~~. Certificate of Approval by the ~~Community~~**BUILDS** ~~Development~~ **Department** staff (to be placed on plat) which shall be provided as follows:
    In accordance with the provisions as set forth in the Subdivision Regulations of Republic, Missouri, I _____, do hereby certify that on the _____

day of _____, 20___, the ~~Community Development~~**BUILDS** Department approved the request for a minor subdivision for _____.

Any further subdivision of the above described land or modifications of the land description(s) will require reapproval in accordance with the Subdivision Regulations of the City of Republic, Missouri.

_____

~~Community Development~~**BUILDS** Department **Representative**

_____

Date

17. ~~16~~. Statement of owner**(s)** certifying that ~~he/she~~**the owner** had title to the land being subdivided:

As owner I have caused the land described on this plat to be surveyed, divided, mapped, and all access rights reserved and dedicated as represented on the plat.

_____

Owner and/or Subdivider

_____

Date

E. *Final Submittal*. Final submittal of the Minor Subdivision Plat shall be prepared on a reproducible original (mylar) twenty-four (24) inches by thirty-six (36) inches or those dimensions required by the Greene County Recorder of Deeds. In addition to the original the City may require additional elements to incorporate the Minor Subdivision into the City map. The following items shall be submitted:

~~1. Sixteen (16) inches x twenty-four (24) inches scaled reproducible mylar for the City's plat book.~~

~~2. Four (4) blue line copies (24" x 36").~~

1. ~~3~~. All applicable off-site easements and right-of-way deeds.

2. ~~4.~~ Copy of private and restrictive covenants to be recorded.

3. ~~5~~. Digital copy of subdivision plat, cad file, etc. for City map upgrades.

Article 410-III Major Subdivisions -- Preliminary Plat

410.130 Major Subdivisions -- Preliminary Plat

All subdivision of land classified as a major subdivision shall be subject to the procedures described in this Article. Approval of a Final ~~or Record~~ Plat shall be subject to approval of a Preliminary Plat in accordance with regulations contained herein.

410.140 Application For Preliminary Plat

The developer shall submit a **digital**~~minimum of five (5)~~ copy~~ies~~ of the proposed Preliminary Plat **consisting of the associated Preliminary Engineering Plan and Preliminary Survey Plan** ~~or more~~, as required by the City, a completed application form and applicable application fees, as provided for in the fee schedule found in Section 805.050, to the Republic ~~Community Development~~**BUILDS** Department at least twenty (20) working days prior to the meeting at which approval is requested. A completed Preliminary Plat checklist shall accompany all applications for major subdivisions.

410.150 Review Criteria And Procedures For Preliminary Plat

A. Application and Preliminary Plat shall be reviewed for conformance with all applicable City adopted codes and regulations by the **BUILDS Department staff**~~City Planner~~. If the **BUILDS Department staff**~~City Planner or City Engineer~~ reviews the application and plat and finds that it is incomplete or that the requirements of this Chapter, the comprehensive plan or other adopted plans have not been met, ~~than~~ the **BUILDS Department**~~City Planner~~ shall so notify the applicant in writing of any deficiencies. Once all deficiencies have been addressed and the **BUILDS Department**~~CityPlanner and City Engineer~~ ha**s**~~ve~~ approved the plat, ~~than~~ a recommendation for approval or denial shall be transmitted to the Planning and Zoning Commission. After receiving comments and recommendations from the ~~City~~ **BUILDS Department staff**~~Planner~~, the Planning and Zoning Commission shall review the Preliminary Plat for its conformance to the following review criteria and shall ensure the development, in the proposed location:
    1. Will not endanger the public health or safety;
    2. Will not injure the value of adjoining property or abutting property;
    3. Will be in conformity with the Comprehensive Plan, Transportation Plan, Zoning Code, Water System Master Plan, Wastewater System Facility Plan or other plans officially adopted by the City Council; and
    4. Will be in harmony with the area in which it is located.

B. The Planning and Zoning Commission may request modifications to the Preliminary Plat. The **Planning and Zoning** Commission shall then confer approval, conditional approval or disapproval of the Preliminary Plat within forty-five (45) days of filing and transmit all copies of the Preliminary Plat together with written reasons for its action to the City Council. The approval or the refusal to approve the Preliminary Plat by the City Council shall take place within thirty (30) days from and after the date in which the Planning and Zoning Commission has made a recommendation to approve or refuse to approve the Preliminary Plat. Once the City Council have approved or refused to approve the Preliminary Plat, the **BUILDS Department**~~City Planner~~ shall notify the owner or applicant of the decision in writing.

410.160 Effect Of Preliminary Plat Approval

Preliminary Plat approval shall confer upon the developer, for a period of two (2) years from date of approval, the conditional right that the City Council will not change the general terms and conditions under which the approval was granted. After approval of the Preliminary Plat, the developer may proceed with the detailed construction plans for all required infrastructure of the area planned for inclusion on the final plat. The City Council, upon recommendation by the Planning and Zoning Commission, may extend this two (2) year period if the developer has applied in writing for such an extension and the Planning and Zoning Commission and City Council determine a longer period should be granted due to unusual circumstances. If an extension is not granted, the Preliminary Plat approval is null and void. If no Final Plat of a subdivision for which preliminary approval has been given is approved within said two (2) year period, or such longer period as the City Council may allow, a resubmission and review by the Planning and Zoning Commission and City Council shall be required. It shall not be the responsibility of the City to notify the applicant of an expired Preliminary Plat.

410.170 Phased Construction And Platting

If phased construction is planned, the construction and final platting of the first phase shall be completed within two (2) years of the date of approval of the Preliminary Plat. Subsequent phases of the ~~f~~Final ~~p~~Plat may be submitted covering portions of the approved ~~p~~Preliminary ~~p~~Plat; provided, however, that all phases of the ~~p~~Preliminary ~~p~~Plat must be completed within four (4) years of the date of approval of the ~~p~~Preliminary ~~p~~Plat. If all phases of the ~~p~~Preliminary ~~p~~Plat have not been completed within four (4) years of the date of approval of the ~~p~~Preliminary ~~p~~Plat, then the ~~p~~Preliminary ~~p~~Plat shall be resubmitted to the

City for extension and approval in accordance with the provisions of Section **410.150** hereof. If an extension and approval is not granted, the original ~~p~~Preliminary ~~p~~Plat t approval shall be null and void.

[Ord. No. 03-56 §1, 8-25-2003]

410.180 Existing And Proposed Features To Be Shown On Preliminary Plat

A. **For all applications made, the Preliminary Plat submission must consist of a Preliminary Engineering Plan and a Preliminary Survey Plan. These two independent elements making up the entirety of the Preliminary Plat must be provided on separate pages. The Preliminary Plat submission must contain all of the following information for approval and shall be designed in conformity with the Design Standards contained in Article IV.** ~~The following information is required on all Preliminary Plats submitted for approval. The required information may be combined for presentation on one (1) or more drawings or maps. In the interests of clarity, speed and efficiency in the review process, the City Planner may require that the information be presented on separate or additional drawings or maps. In all cases the Preliminary Plat submission should include the following and shall be designed in conformity with the Design Standards contained in Article VI.~~

1. ~~*Name and code*. The proposed name of the subdivision, which shall not duplicate or closely resemble the name of another, previously recorded subdivision in the City of Republic.~~**The Preliminary Engineering Plan shall serve as a preliminary construction document reflecting the general layout of all infrastructure for the proposed subdivision and must contain all of the following information:**
    a. ***Boundary lines*. The boundary lines of subject property along with lot and easement lines, accurate in scale, of the tract to be subdivided. To reduce clutter during review, the above items may be lighter in color than the prominent items required on this plan.**
    b. ***Survey acknowledgement*. The name and license number of the Professional Land Surveyor or holder of a Corporate Survey License who provided the boundary information for the Preliminary Engineering Plan, and the date of usage conformation shall be noted on Plan.**
    c. ***Streets and other features*. The location, widths and names of all existing streets or other public ways within or adjacent to the tract.**
    d. ***Existing utilities*. Including but not limited to electric, gas, sewer, telephone, water mains, storm sewer, culverts, and other aboveground and underground structures within the tract and immediately adjacent thereto with pipe sizes and grades indicated.**
    e. ***Proposed design of streets, drainage, etc*.**
        (1) **The layout, names and right of way widths of proposed streets, alleys and easements; the location and approximate sizes of catch basins, culverts and other drainage structures; the location of proposed sewer lines, water lines, fire hydrants and other related infrastructure planned to serve the development.**
    f. ***Topography*. Contours at vertical intervals shall be based on the NAVD 88 datum or City monuments and shall be shown as follows:**
        (1) **Average slope less than six percent (6%)—two (2) foot interval contour map;**
        (2) **Average slope over six percent (6%)—five (5) foot interval contour map.**

g. The Preliminary Engineering Plan shall bear the date, signature and seal of a Professional Engineer holding a valid license to practice in the State of Missouri and shall be present on each sheet submitted.

h. North point, *etc*. Title, bar scale, north arrow, date of preparation and date of each successive revision.

2. ~~*Owners of record*. The names and addresses of the owner(s) of record, developer(s), engineer, and/or surveyor responsible for the subdivision design.~~The Preliminary Survey Plan must contain all of the following information:

a. *Name and code*. The proposed name of the subdivision, which shall not duplicate or closely resemble the name of another, previously recorded subdivision in the City of Republic.

b. *Owners of record*. The names and addresses of the owner(s) of record, developer(s), and/or surveyor responsible for the subdivision design.

c. *Vicinity map*. A vicinity map at a scale of four hundred (400) feet or more to the inch shall be drawn on the Preliminary Survey Plan. The map shall indicate:

(1) Section, Township, Range.

(2) Adjacent City Limits, other corporation or ad hoc district lines, such as school or sewer districts, etc.

(3) The nearest existing highways or thoroughfares, streets and alleys in neighboring subdivisions or property.

d. *Abutting owners*. The name of adjacent subdivisions and the names of record owners of adjacent parcels of unplatted land.

e. *Boundary lines*. The boundary lines, accurate in scale, of the tract to be subdivided.

f. *Streets and other features*. The location, widths and names of all existing or platted streets or other public ways within or adjacent to the tract, and other important features such as existing permanent buildings; large trees and watercourses; railroad lines; corporation and township lines.

g. *Other Existing Elements.* Right-of-way for streets and all easements for drainage, sewer, water and other utilities adjacent or connecting to tract.

h. *Proposed Elements.* All proposed right-of-way for streets and all easements for drainage, sewer, water and other utilities planned to be within the tract. and immediately adjacent thereto.

i. *Proposed design of streets, drainage, etc*.

(1) The layout, names and right-of-way widths of proposed streets, alleys and labeled easements intended to serve the development.

(2) Where additional right of way is required along an existing road, new right-of-way line(s) shall be based off section or the adjacent aliquot part line rather than center-line road splits.

(3) Exemptions or modifications may be made by the BUILDS Administrator or their designee.

j. *Proposed layout and legal description*. The legal description of the entire site to be subdivided, including acreage in tract, boundary and easement lines, locations and dimensions and bearings of newly created tracts, parcels or lots that are part of the subdivision shall be shown on the Preliminary Survey Plan. The dimensions and location of all arcs, radii points of curvature, tangent boundaries, and other pertinent survey information necessary to an accurate description and location. Survey data shall meet all applicable portions of the

current Missouri Standards for Property Boundary Surveys as promulgated by the Department of Agriculture, Division of weights Measures, and Consumer Protection. All survey datum shall be vertically tied to the NAVD 88 datum and shall graphically show a horizontal tie to two subdivision corners bearing and distance from the nearest published GRS monument which name and/or designation number, date of adjustment and coordinates shall be noted. if the MoDOT Real Time Network is used in lieu of a GRS monument, then a statement to that effect shall be noted along with the Epoch of subdivision control.

(1) *Curve data* — When a boundary, easement, lot or street is on a circular curve, data shall be shown in place or on an included Curve Table. Curve data shown shall consist of at least the following: Curve number/name if table is used; Delta or central angle; Radius; Arc length; Chord length and bearing.

(2) When curved lot lines are concentric to the centerline of street it shall be noted as such on the Preliminary Survey Plan.

(3) Non-tangent curves shall be noted in place or in Curve Table and shall show Central Angle rather than Delta; Bearing from radius point to point of curvature and all other curve components mentioned above.

k. *Lot information*. The plat shall indicate the area, lot size, proposed setbacks and exact location and distance of all structures and other physical improvements in relation to proposed lot lines. Each lot should bear sequential numbering.

l. *Zoning*. Zoning boundary lines and proposed use of property.

m. *North point, etc*. Title, bar scale, north arrow, date of preparation and date of each successive revision.

n. *Floodplains, etc.* The extent and location of floodplains, floodways or other waterways of record; elevations of which, shall be based on applicable Flood Insurance Studies, Flood Insurance Rate Maps, Flood Boundary and Floodway Maps.

o. *Sinkholes*. The extent and location of sinkholes must be shown, the location of which shall be based on the latest data from the Greene County Assessor's Department, a report conducted by a Geotechnical Engineer, or a source approved by the BUILDS Department Administrator or their designee. Any sinkhole and its associated thirty-foot "No Build" buffer zone must be entirely contained within a common lot.

p. The Preliminary Survey Plan shall bear the signature and seal of a Professional Land Surveyor holding a valid license to practice in the State of Missouri and shall contain the following statement to be completed by that individual:

(1) That I, _____, do hereby certify that this plat was prepared under my supervision from an actual survey of the land herein described prepared by _____ dated _____ and signed by _____ P.L.S. No. _____ and that the corner monuments and lot corner pins shown herein were placed under the personal supervision of _____ P.L.S. No. _____ in accordance with all applicable portions of the current Missouri Standards for Property Boundary Surveys as promulgated by the Department of Agriculture, Division of Weights, Measures and Consumer Protection.

Date Prepared: _____
Signature: _____
Missouri Professional Land Surveyor No. _____

3. ~~*Vicinity map*. A vicinity map at a scale of four hundred (400) feet or more to the inch shall be drawn on the preliminary plat. The map shall indicate:~~
   a. ~~Section, Township, Range.~~
   b. ~~Adjacent City Limits, other corporation or ad hoc district lines, such as school or sewer districts, etc.~~
   c. ~~The nearest existing highways or thoroughfares, streets and alleys in neighboring subdivisions or property.~~
4. ~~*Abutting owners*. The name of adjacent subdivisions and the names of record owners of adjacent parcels of unplatted land.~~
5. ~~*Boundary lines*. The boundary lines, accurate in scale, of the tract to be subdivided.~~
6. ~~*Streets — other features*. The location, widths and names of all existing or platted streets or other public ways within or adjacent to the tract, and other important features such as existing permanent buildings; large trees and watercourses; railroad lines; corporation and township lines, utility lines, etc.~~
7. ~~*Existing utilities*. Existing sewer, gas, telephone, water mains, culverts and other underground structures within the tract and immediately adjacent thereto with pipe sizes and grades indicated.~~
8. ~~*Topography*. Topography, contours at vertical intervals shall be based on USGS datum or City monuments and shall be shown as follows:~~
   a. ~~Average slope less than six percent (6%) — two (2) foot interval contour map~~
   b. ~~Average slope over six percent (6%) — five (5) foot interval contour map~~
9. ~~*Proposed design — street, drainage, etc*. The layout, names and widths of proposed streets, alleys and easements; the location and approximate sizes of catch basins, culverts and other drainage structures; the location of proposed sewer lines, water lines, fire hydrants and other related infrastructure planned to serve the development.~~
10. ~~*Proposed layout and legal description*. The legal description of the entire site to be subdivided, including acreage in tract, boundary lines, locations and of newly created tracts, parcels or lots that are part of the subdivision shall be shown on plat. The dimensions and location of all arcs, radii, internal angles, points of curvature, and tangent boundaries, and other pertinent survey information necessary to an accurate description and location. Survey data shall meet the standards promulgated by the State of Missouri, "Missouri Minimum Standards for Property Boundary Surveys", Division of Geology and Land Survey, Missouri Department of Natural Resources. All survey datum shall be vertically and horizontally tied to the City of Republic Geographical Reference Stations (GRS).~~
11. ~~*Lot information*. The plat shall indicate the area, lot size, proposed setbacks and exact location and distance of all structures and other physical improvements in relation to proposed lot lines.~~
12. ~~*Zoning*. Zoning boundary lines and proposed use of property.~~
13. ~~*North point, etc*. Title, scale, north arrow, date of preparation and date of each successive revision.~~
14. ~~*Floodplains, etc.* The extent and location of floodplains, floodways or other waterways of record; elevations of which, shall be based on applicable Flood Insurance Studies, Flood Insurance Rate Maps, Flood Boundary and Floodway Maps.~~

15. *Location of model home*. The location of proposed model home or spec. house and required parking.
16. *Commercial and industrial subdivisions*. Preliminary Plats for industrial or commercial subdivisions shall delineate who will be responsible for addressing open space, landscaping and buffer-yard requirements.

410.190 Model Home Procedure

1. *Purpose*. To provide a procedure whereby the construction of a model home or homes may begin prior to the recording of the Final Plat.
2. *Procedure*. After receiving approval of the Preliminary Plat of a proposed subdivision from the Planning and Zoning Commission and City Council and after an approved set of construction plans have been submitted, the developer may submit an application for a model home for review by the City Planner and Building Inspector. The application for a model home shall include all information as routinely required. In addition, the application shall be accompanied by a plan, which shall show the location, street elevation, size and the number and location of parking areas of the model home in relation to the lots, streets and utilities proposed in the subdivision.
3. *Sale Or Occupancy*. No part of the proposed subdivision may be conveyed, nor an occupancy permit issued, for any structure therein until the display home has been located on an approved lot in a recorded subdivision. The Building Inspector, with approval of the City Planner, may issue a temporary occupancy permit for the use of the home as a model, office or showroom during the duration of development of the subdivision, home construction, etc.
4. *Driveways And Off-Street Parking*. Off-street areas used for standing and maneuvering of vehicles shall have concrete or asphalt driving surfaces adequate for all-weather use, transitioning at the appropriate grade and so drained as to avoid flow of water across sidewalks.

Article 410-IV Major Subdivision -- Improvements

410.200 General Procedures For The Preparation And Submission Of Subdivision Improvements Plans

After approval of the Preliminary Plat and prior to approval of the Final Plat, Construction Plans shall be prepared for all or a specified phase of the subdivision.

410.210 Procedure For Submission Of Subdivision Improvement Plans

A. *Preparation Of Plans*. It shall be the responsibility of the developer to have construction plans for streets, utilities and other required improvements prepared and submitted to the City for review. The Construction Plans for all aspects of the site development shall be prepared by a qualified ~~p~~Professional ~~e~~Engineer, registered in the State of Missouri. All improvements shall be designed and constructed in accordance with requirements of Article **VI**. General Principles of Design and Minimum Requirements for the Layout of Subdivisions**. In addition, all improvements shall be designed and constructed in accordance with the "Standard Specifications and Details for Water and Sewer Construction, City of Republic, Missouri", and the "Stormwater Management and Design Criteria Manual"** ~~and in accordance with the "Construction Specifications for Public Improvements, City of Republic"~~, as amended from time to time, on file with at the offices of the City of Republic ~~Public Works~~**BUILDS** Department and incorporated herein by reference. ~~Five (5)~~**Three (3) physical** copies **and a digital version in pdf** ~~-~~shall be submitted for review to the **BUILDS Department**~~Public Works Director~~. The Construction Plan shall be any scale ~~from (1 inch = 10 feet) through (1 inch = 50 feet), so long~~ as the scale is an increment of ten (10) feet and is

sufficiently clear in reflecting details of the proposed construction. **The signature and seal of the Professional Engineer in responsible charge shall appear on every plan sheet along with title, bar scale, north arrow, date of preparation and each date a revision was made shall be shown on each page as applicable.** Construction Plans shall be prepared on exhibits 24 inches x 36 inches and shall be bound by staple on one side. All plan sheets shall be prepared to a degree to allow for adequate review and construction. Each page shall contain an approval block for approval from the City of Republic ~~Public Works Department~~. The ~~City~~**BUILDS Department** may require additional details to be developed to establish clarity for review and construction.

B. *Approval Of Construction Plans*. The ~~City Planner~~ **BUILDS Department** ~~-~~shall coordinate review and subsequent approval, with all related City departments, ~~the Public Works Director and City Engineer,~~ of the Construction Plans. If the ~~City Planner~~**BUILDS Department** determines that the plans do not meet the minimum standards and require modification, correction and are not approvable, **then**~~than the City Planner~~**BUILDS Department staff** shall forward a letter to the developer and his/her engineer stating the deficiencies. After all related deficiencies have been addressed and approval is given by all related departments ~~and the City Engineer~~, the ~~City Planner~~**BUILDS Department** shall issue an appropriate letter certifying approval**, send digital version of plans with approval signature from City,** and **provide** notice to proceed with an application for water and sewer main extension and other related permits from outside agencies.

C. *Review By Outside Agencies*. Engineering drawings of all required improvements shall be reviewed and approved by the ~~City~~**BUILDS Department**, except for improvements to be made under the jurisdiction of other Municipal, County or State agencies, in which case the drawings shall be submitted to the appropriate agency for review and approval. Where review and approval of engineering drawings is made by such agency, **the BUILDS Department**~~the CityPlanner~~ shall be given written confirmation that the necessary reviews have been completed and approvals have been granted.

D. *Review By Consultants*. Expenses incurred by the City for required reviews, inspections, and/or related testing shall be reimbursed to the City, by the developer, for all costs incurred by it in performing such review, inspection and/or testing, including all professional fees incurred as a result thereof. To insure payment or reimbursement of such costs, fees and expenses, all developers, and such other persons or entities associated with developers, as the **BUILDS Department** ~~Community Development Department~~ deems appropriate, shall execute a promissory note, payable to the order of the City on demand, in such amount as is anticipated to cover such costs, fees and expenses. The maker or makers of such promissory note may satisfy the same by the timely payment of all costs, fees and expenses incurred by the City as identified hereinabove. Such promissory note shall provide for the payment of interest at no less than twelve percent (12%) per annum from and after the date of demand and shall further provide for the payment of attorney fees by the maker or makers in the event of default.

E. *Pre-Construction Meeting And Final Plan Submittal*. The City ~~Planner~~ shall coordinate a pre-construction meeting with the developer, Project Engineer, Construction Inspector, ~~Public Works Director~~ **City Engineer,** general contractor, all appropriate subcontractors, and department heads. All related construction practices, policies and requirements will be discussed and established at the pre-construction meeting. It is the responsibility of the applicant, engineer and contractor to check and review all City requirements relating to the construction of public improvements. A minimum of ~~four (4)~~ **two (2)** sets of approved plans**, bearing the signature of the City Engineer,** prepared on twenty-four (24) inches by thirty-six (36) inches **D Size,** bound plan sheets and **two (2)**~~one (1) five (5)~~ set~~s~~ prepared on ~~twelve (12) inches by eighteen (18)~~**eleven (11) inches by seventeen (17)** inches **B Size,** bound plan sheets shall be submitted at or before the pre-construction meeting.

F. *Construction Permit*. No person, firm or corporation shall develop, install, alter, grade, remove vegetation, fill or modify any tract of land, roadway or any City-owned utility within the City of Republic or cause the same to be undertaken without first securing the approval of the construction plans as required by this Chapter or other City ordinances. The City shall charge a construction permit fee, as provided for in the fee schedule found in Section 805.050, for plan review and field inspection of all related public infrastructure including water, sewer, streets, stormwater and related infrastructure to be dedicated to the City as part of the development. Furthermore, no construction permit shall be issued until the following has been received:
   1. Receipt of paid construction permit fees on file relating to inspection of infrastructure.
   2. The minimum number of approved construction plans **sent** to the ~~City Planner~~**BUILDS Department**, sealed by the Project Engineer and signed under the hand of the ~~Public Works Director~~ **City Engineer** or his/her designee.
   3. Approvals and permits from other affected County, State or Federal agencies.
   4. All off-site utility easements drainage easements and right-of-way deeds shall be recorded by the County Recorder of Deeds and provided to the City at or before the pre-construction meeting.
   5. **Confirmation of execution of any Developer's Agreement(s) for deferral of required infrastructure construction.**

G. *Phasing*. Where a subdivision is to be developed in phases, the provisions of this Article shall apply to each phase. However, improvements and financial guarantees may be required to extend beyond the boundaries of a subdivision phase if such extension is necessary to ensure the relative self-sufficiency of the phase pending completion of the entire subdivision. Improvements and financial guarantees may also be required for public infrastructure beyond the boundaries of a particular phase of the subdivision in order to secure the construction of planned infrastructure improvements that are necessitated in order to conform to the City's adopted Comprehensive Plan or constituent parts thereof. Such extensions, schedules, and similar arrangements shall be set forth in an agreement between the developer and the Council prior to approval of the Final Plat.

H. *Modification During Construction*. All installation and construction shall conform to the approved engineering drawings. However, if the developer chooses to make minor modifications in design and/or specifications during construction, he/she shall make such changes at his/her own risk, without any assurance that the City will approve the completed installation or construction. It shall be the responsibility of the developer to notify the City of any changes from the approved drawings. The developer may be required to correct the installed improvement so as to conform to the approved engineering drawings.

I. *As-Built Drawings*. The developer shall submit to the ~~City Planner at least five (5) sets of~~**BUILDS Department** "as-built" engineering drawings of the required improvements that have been completed. **Said drawings will consist of all original plan sheets and show the distinct changes that took place during construction. As-Built Drawings will also be required as digital drawing (dwg) files, portable document files (pdf) and/or may be required in another digital format at the BUILDS Department staff's discretion.** The Project Engineer shall certify each set of drawings in accordance with the requirements of Section **410.360**.

410.215 Construction Plans

A. The construction plan for all aspects of the site development shall be prepared by a qualified **P**~~p~~rofessional **E**~~e~~ngineer, registered in the State of Missouri. **The construction plans shall be significantly based on the configuration shown on the approved Preliminary Plat.** ~~Five (5)~~**Three**

(3) copies **and a digital copy** shall be submitted for review to the ~~Public Works Director~~**BUILDS Department**. The construction plan shall be any scale ~~from one (1) inch equals ten (10) feet through one (1) inch equals fifty (50) feet,~~ so long as the scale is an increment of ten (10) feet and is sufficiently clear in reflecting details of the proposed construction. Construction plans shall be prepared on exhibits twenty-four (24) inches by thirty-six (36) inches and shall be **bound** ~~by staple on one (1) side~~. All plan sheets shall be prepared to a degree to allow for adequate review and construction. Each page shall contain an approval block for approval from the City of Republic ~~Public Works Department~~. The City may require additional details to be developed to establish clarity for review and construction. The plans shall generally consist of the following:

1. Title (cover) page containing, but not limited to, the following: owner's and developer's name, engineer of record, name of project, table of contents **with page numbers**, general rules of construction, phone numbers of utility suppliers and a record of submittals and approval blocks.
2. Street plans, sidewalk plans and profile sheets containing, but not limited to, the following:
    a. Pavement installation, widening or resurfacing improvements dimensioned and developed in accordance with the standard typical section applicable to the project;
    b. Top of pavement mathematical profile grade elevations at twenty-five (25) feet intervals on vertical curves and fifty (50) feet intervals on tangent sections for all roadway construction. Top back of curb elevations at twenty-five (25) foot intervals for all horizontal curves, at thirty-degree (30°) intervals for street intersections and cul-de-sacs. Existing vertical curve elevations shall be shown at points of extension at intervals of twenty-five (25) feet. Existing vertical curve elevations shall be shown at points of extension at intervals of twenty-five (25) feet. PC and PT elevations shall be indicated at all curves and intersections;
    c. Resurfacing profile grade elevations on existing centerline and edges of pavement at twenty-five (25) feet intervals and breaks in grade (i.e. irregularities in pavement) and establish new centerline and edge of pavement profiles; and
    d. Existing and proposed grades at the centerline and left and right back of curb.
3. Pavement striping, marking and signage plan containing, but not limited to, the following:
    a. Location, type of markings and signage prescribed;
    b. The type of materials used; and
    c. The method for installation. The plan shall be based and designed on the Manual on Uniform Traffic Control Devices.
4. Grading, erosion and sediment control plan containing, but not limited to, the following:
    a. Finished contours shall be shown to the limits of the project **for the entire site**, establishing the desired (planned) flow of all on-site stormwater in connection with planned streets, sidewalks, stormwater ditches, pipes and structures; and
    b. Location and composition of silt fences, construction entrances, catch basins and related temporary structures and devices to prevent erosion, siltation and nuisances to adjacent properties, storm sewers and streets**, and a delineation showing limits of disurbance**.
5. Sanitary sewer plans and profile sheets containing, but not limited to, the following:
    a. Profiles establishing the class and size of pipe, invert elevations, grade, distance between manholes and minimum distance from other proposed or existing utilities. Profile sheets shall accurately depict the elevation, size and material type of intersecting proposed or existing utilities;

b. Plans establishing the exact location, class and size of service lines; and
c. Plan and profiles establishing lift stations and related components of the system. Site development details and requirements shall be provided and referenced in accordance with the Construction Specifications for Public Improvements.

6. Water plans containing, but not limited to, the following:
   a. Plan view of the proposed system, including class of pipe and size in relation to the back of curb, including fire hydrants, gate valves, blow-off assemblies, service lines and meter pits, etc.; and
   b. Profile drawings~~, submitted at the discretion of the City, shall~~ accurately depicting the elevation, size and material type of intersecting proposed or existing utilities.
7. Additional submittals containing, but not limited to, the following forms, documents and exhibits intending to parallel the provisions of the Missouri Department of Natural Resources including specific information for determining the most efficient and cost-effective manner in which to extend public utilities:
   a. A copy of the application for the Missouri Department of Natural Resources Request for Extension of Sanitary Sewer and Public Drinking Water. The completed and executed document shall be retained by the City;
   b. Sanitary sewer engineering report containing a letter of transmittal from the design engineer summarizing the facilities, a discussion on the design criteria and assumptions used, hydraulic and BOD loading calculations, an opinion as to the conformity of the proposed sewer extension with the City of Republic Master Plan and discussion on facility sizing in regard~~s~~ to future development. If a lift station is proposed, the engineering report shall include a feasibility study for alternative facilities (gravity sewer) and the potential for retirement of the proposed lift station;
   c. Water engineering report containing a letter of transmittal from the design engineer summarizing the facilities, a discussion on the design criteria and assumptions used, a hydraulic analysis demonstrating domestic and fire flow conditions, an opinion as to the conformity of the proposed extension with the City of Republic Water Master Plan and discussion on facility sizing in regard~~s~~ to future development;
   d. Easements for all proposed **drainage**, sewer and water extensions located outside **previously existing** easements **or right-of-way**, to be dedicated via a final plat, must be accompanied by draft instruments for the formal dedication of temporary construction and permanent easements. Depending upon the number of land-owners and the complexity of the proposed sewer extension, the City may require a property owner's exhibit accompanied by an opinion of title as issued by a recognized title company; and
   e. Cost estimate indicating an engineer's statement of probable cost for the construction of the proposed main extension. If a sewer lift station or water pressure control facilities are proposed, estimated operating costs for ten (10) years shall be included.
8. Storm drainage, storm sewer plan and profile sheet containing, but not limited to, the following:
   a. Drainage plans indicating all existing and proposed storm sewer lines, inlet boxes, manholes, basins, swales, watercourses, culverts and other underground or at-grade structures in the vicinity of construction and immediately adjacent thereto.

Pipe classes, sizes, grades, inverts, box openings and related structure details shall also be established and indicated on the plan sheets; and

b. Grading details pertaining to site development shall be shown in plan or on cross-section sheets. Details shall be shown with respect to existing and proposed contours, normally at two (2) foot intervals.

9. Detention plan containing, but not limited to, the following: detention plans, elevations, dimensions, weir elevations and cross-sections, low-flow channels, pipe sizes, discharge and dissipation structures.
10. *Record drawings*. One (1) record copy of all drawings, specifications and addenda addressing public improvements shall be maintained by the developer's contractor and by the City's Construction Inspector in good order and annotated to show all changes made during construction. Upon completion of the work, these record documents will be delivered to the engineer of record who shall provide ~~copies of these documents, to include reproducible copies and electronic copies~~**As-Built Plans as a digital copy (in pdf), and a drawing file (dwg)** or **other approved format of** digital CAD files of the revised drawings, to the City at no cost.

410.220 Inspection And Acceptance Of Subdivision Improvements

A. *Certification By Project Engineer*. In accordance with the ~~"Construction Specifications for Public Improvements"~~ **"Standard Specifications and Details for Water and Sewer Construction", and the "Stormwater Management and Design Criteria Manual",** all improvements required by this Chapter shall be inspected by the developer's engineer, or his/her agent, and certified in writing to the City as having been completed, except for improvements made under jurisdiction of other public agencies, in which case engineers or inspectors of each agency will make the necessary inspections. Where inspections are made by other agencies, the Engineer shall be given written reports of each final inspection.

B. *Inspection By The City.* In addition to inspection and certification by the Project Engineer, the City shall provide inspection of all phases of construction to field verify that the location of all infrastructure installed are in coordination with submitted as-built plans.

C. *Compliance With Standards*. The developer shall bear the final responsibility for the plans, construction drawings and the installation, construction and inspection of all required improvements according to provisions of this Chapter and to standards and specifications of ~~various~~**applicable** public agencies.

D. *Acceptance*. Approval of installation and construction of improvements by the Project Engineer shall not constitute acceptance by the City of the improvements for dedication purposes. Acceptance shall be established by approval of all related City departments and the approval by all outside public agencies, including, but not limited to, County, State or Federal Governments.

E. *Site Cleanup*. The developer shall be responsible for removal of all equipment, material and general construction debris from the subdivision and from any lot, street or public way or therein or adjacent thereto. Dumping such debris into sewers, adjacent property or other land in the City is also prohibited. Burning of debris is prohibited unless a permit is obtained from the MoDNR.

Article 410-V Major Subdivision -- Final Plat

410.230 Application For Final Plat

The developer shall submit a completed application and applicable fees as provided for in the fee schedule found in Section 805.050, a completed Final Plat checklist, final inspection fees, sign installation fee, **a**

digital copy, and a minimum of three~~five~~ (3~~5~~) copies of the proposed Final Plat or more, as required by ~~the City Planner~~BUILDS Department staff, to the BUILDS Department ~~Republic Community Development Department~~ at least twenty (20) working days prior to the meeting of the City Council at which the plat is to be considered for approval. ~~A Final Plat and application shall not be accepted for review after the two-year anniversary date of the City Council's Preliminary Plat approval.~~

410.240 Review Procedures

The ~~City Planner~~BUILDS Department shall determine if the submittal is complete, and if so, transmit the same to the City Clerk in adequate time for inclusion on the agenda for the City Council's next meeting. If the ~~City Planner, Community Development Director or City Engineer~~BUILDS Department staff reviews the application and plat and finds that it is incomplete or that the Minimum Required Improvements are not completed, then ~~City Planner~~BUILDS Department staff shall so notify the applicant in writing and shall note any deficiencies. Once all deficiencies have been addressed and the final plat is signed by the owner, sealed by the surveyor of record and all others required herein, the plat will be forwarded to the City Council for approval by general ordinance, prepared by the City Attorney.

410.250 Minimum Required Improvements

A. The owner or developer is required to have all subdivision improvements, including sidewalks, completed prior to the filing of the final plat. In lieu of the final completion of said improvements before the plat is recorded, the owner or developer ~~or other person~~shall enter into a Developer's Agreement~~who agrees~~ with the City to make the public improvements ~~on behalf of the owner or developer may~~to post a ~~surety bond with one (1) or more corporate sureties engaged in the business of signing surety bonds in the State of Missouri, an escrow agreement, letter of credit or other appropriate security agreement for certain improvements~~financial security with the approval of the ~~City Attorney and the City Administrator~~City Council of the City of Republic~~,~~. ~~which surety, escrow agreement or other appropriate security agreement~~The financial security will insure to the City that the improvements will be completed by the owner or developer.

   1. Improvements related to ensuring public safety within the development must be completed and accepted prior to the filing of the final plat. All other improvements must be completed within ~~one (1) year after the recording of the final plat~~the terms of the Developer's Agreement. The ~~Director of Public Works~~ BUILDS Administrator, or their designee, may require that certain improvements such as storm sewers, off-site improvements and basic improvements necessary for the provision of public health and safety be made and refuse to accept security for such improvements when they determine the improvements are necessary for the protection of adjacent property or of the general public. ~~The City may, upon proof of hardship, extend the completion date set forth in said bond or agreements for a maximum period of one (1) additional year; provided a request for said extension is made prior to the end of the one (1) year following recordation and provided the amount of said security is revised pursuant to a revised estimate by the Department of Public Works.~~ The City Attorney and City Administrator, acting in conjunction, may at any time during the period of such bond accept a substitution of principal or sureties on the bond or a substitution of a letter of credit, escrow or other approved security agreement. The amount of the corporate surety bond, escrow agreement or other appropriate security agreement shall not be less than the estimated cost of the improvements, said estimate of cost to be made by the BUILDS Department ~~of Public Works~~. The City may defer at the time of final approval, subject to appropriate conditions, the provision of any and all such improvements as, in its judgment, are not appropriate because of incompatible grades, future planning,

inadequate or lack of connecting facilities or other reasons. As a condition of deferral, the owner or developer shall pay their share of the costs of the future improvements to the City prior to the signing of the final plat or the owner or developer may post an appropriate security approved in the same manner as stated above which shall insure completion of said deferred improvements upon demand by the City. If the improvements are not completed within the specified time, the City Council may use the funds from said security, or any necessary portion thereof, to complete the same.

2. The release or reduction of said corporate surety bond, escrow agreement or other appropriate security agreement shall be in accordance with the following:
    a. When a petition for improvements by the tax bill method is filed for the improvements of this Section and when said petition has passed the required remonstrance petition assuring the City that all improvements will be installed, said bond or agreements posted by the owner or developer to insure the City the improvements of this Section may be released and returned to the owner or developer.
    b. The **BUILDS Administrator** ~~Director of Public Works~~ with the approval of the City Administrator, may release or reduce said bond or agreements posted by the owner or developer to insure to the City the improvements of this Section when **they have** ~~he has~~ determined that all required improvements have been satisfactorily completed and the owner or developer's engineer or surveyor has certified to said Administrator, through submission of a detailed "as-built" survey plat of the subdivision indicating location, dimensions, materials and other information required by said Administrator, that the layout of the line and grade of all public improvements are in accordance with construction plans for the subdivision and that the improvements have been completed, are ready for dedication to the local government and are free and clear of any and all liens and encumbrances.
    c. The **BUILDS Administrator** ~~Director of Public Works~~ with the approval of the City Administrator may reduce, upon request, said bond or agreements when he has made the findings and received the information required in the above Subsection **(b)**, but such reduction shall not exceed the ratio that the cost of completed improvements bears to the total estimated cost of total public improvements for the plat.
3. The City, its boards, commission and agents shall withhold all City improvements or services of whatsoever nature, including the furnishing of sewer, water, electricity and gas, from all additions which have not been approved as provided by these regulations; and further, no permits shall be issued by the **BUILDS** ~~Community Development~~ Department of the City of Republic on any property which has not been approved as provided by these regulations.
4. Provided however, the improvements and permits withheld above shall not be withheld by reason of the conditions therein stated when the City finds the improvements are necessary to comply with other ordinances of the City of Republic which carry a penalty for failure to comply~~.~~

410.260 Effect Of Final Plat Approval

Final Plat approval shall confer upon the developer the conditional right that the City Council will not change the general terms and conditions under which the approval was granted. Approval of the Final

Plat, by general ordinance, and the subsequent recording of the Final Plat shall constitute the subdivision of the property into lots and the creation and dedication of right-of-way and utility easements.

410.270 Monuments

A. All monuments shall be set in the ground at least to the depth of the minimum length given, unless they are encased in concrete. The precise position of corner monuments shall be marked by a point on a cap and the cap inscribed with the registration number o~~–~~f the land surveyor responsible for placement or the corporate registration number or name of the company. Monumentation shall comply with the following at a minimum.
    1. *Permanent monuments*. Two (2) permanent monuments per subdivision block, adjacent to or located in the right-of-way.
        a. Minimum diameter of five-eights (5/8) inch by twenty-four (24) inches length, steel or coated steel rebar or similar bar.
        b. Monuments shall have a permanently attached cap of the same or of a dissimilar metal if the metals are insulated with a plastic insert to reduce corrosion.
    2. *Semi-permanent monuments*. Located at each lot corner of each platted lot in the subdivision.
        a. Minimum diameter of one-half (1/2) inch by eighteen (18) inches in length, steel or coated steel rebar or similar bar.
        b. Monuments shall have a plastic or aluminum cap.
    3. ~~*Elevation markers*~~***Benchmarks***. For subdivisions platted in the vicinity of floodplains, ponds, lakes, creeks and other major drainage features, a permanent **benchmark** ~~elevation marker~~ shall be established at location(s) required by the City to reference and verify minimum finished floor elevations **as published on the As-Built Plans**.

410.280 Existing Or Proposed Features To Be Shown On The Final Plat

A. Prior to approval of the Final Plat, the ~~City Planner and the City Engineer~~**BUILDS Department** shall review the Final Plat for conformance to the Preliminary Plat and to determine that the plat shows or establishes the following information, which shall be in substantial conformity to the Preliminary Plat.
    1. *Name and code*. The name of the subdivision, phase or addition as provided on the Preliminary Plat.
    2. *Date of preliminary plat approval*. The date and name in which the Preliminary Plat was approved as shall be indicated on the Final Plat. In addition, any ordinance, resolution or other bill passed by the City Council or Planning and Zoning Commission that relates to the subdivision or particular phase, shall be included on the plat.
    3. *Owners of record*. The names and addresses of the owner(s) of record, developer(s), engineer, **and/**or surveyor responsible for the subdivision design.
    4. *Vicinity map*. A vicinity map at a scale of four hundred (400) feet or more to the inch shall be drawn on the **Final** ~~preliminary~~ **P**lat. The map shall indicate:
        a. Section, Township, Range.
        b. Adjacent City limits, other corporation or ad hoc district lines, such as school or sewer districts, etc.
        c. The nearest existing highways or thoroughfares, streets and alleys in neighboring subdivisions or unplatted property.

5. *Abutting owners*. The name of adjacent subdivisions and the names of record owners of adjacent parcels of unplatted land.
6. *Boundary lines*. The boundary lines, accurate in scale, of the tract to be subdivided.
7. *Streets — other features*. The location, widths and names of all existing or platted streets, right-of-way or other public ways within or adjacent to the tract, and other important features such as watercourses; railroad lines; corporation and township lines, utility lines, etc.
8. *Proposed design — street, drainage, etc*.
    a. The layout, names and widths of right-of-way, streets, alleys and easements serving stormwater, sewer, water or other utilities within the property being subdivided.
    b. **Where additional right of way is required along an existing road, new right of way line(s) shall be based off of section or other adjacent aliquot part line rather than centerline of road splits.**
    c. **Exemptions or modifications may be made by the BUILDS Administrator or their designee.**
9. *Proposed layout and legal description*. The legal description of the entire site to be subdivided, including ~~approximate~~ acreage in tract**,** ~~,~~ **The** boundary **and easement** line~~s~~, location**s**, ~~and~~ dimensions**, and bearings** of newly created tracts, parcels or lots that are part of the subdivision shall be shown on plat. The dimensions and location of all arcs, radii, ~~internal angles,~~ points of curvature and tangent boundaries and other pertinent survey information necessary ~~to~~ **for** an accurate description and location. Survey data shall meet **all applicable portions of the current Missouri Standards for Property Boundary Surveys as promulgated by the Department of Agriculture, Division of Weights, Measures and Consumer Protection.** ~~the standards promulgated by the State of Missouri, "Missouri Minimum Standards for Property Boundary Surveys", Division of Geology and Land Survey, Missouri Department of Natural Resources.~~ All survey datum shall be vertically **tied to the NAVD 88 datum** and **shall graphically show a horizontal tie to two subdivision corners by bearing and distance from the nearest published GRS monument which name and/or designation number, date of adjustment and coordinates shall be noted. If the MoDOT Real Time Network is used in lieu of a GRS monument, then a statement to that effect shall be noted along with the Epoch of subdivision control. Also State Plane Coordinates of at least two external boundary corners of subdivision shall be shown.** ~~horizontally tied to the City of Republic Geographical Reference Stations (GRS).~~
10. ~~*Curvature and radius*~~***Curve Data***. When a **boundary, easement, lot, or** street is on a circular curve, the ~~main chord of the~~ centerline **data shall be shown in place or on an included Curve Table. Curve data shown shall consist of at least the following; Curve number/name if table is used; Delta or central angle; Radius; Arc length; Chord length and bearing.**
    a. **When curved lot lines are concentric to the centerline of street it shall be noted as such on plat.**
    b. **Non-tangent curves shall be noted in place or in Curve Table and shall show Central Angle rather than Delta; Bearing from radius point to point of curvature and all other curve components mentioned above.** ~~shall be drawn as a dotted line in its proper place; and either in it or in an adjoining table, the bearing and length shall be noted; the radius of the circle of which the curve is a part; the central angle subtended; the bearing of the radius at the point~~

~~of curve; and the chord length and deflection angles used in staking out the survey. The lot lines on the street sides may be shown in the same manner or by bearings and distances. When a curve of two hundred (200) feet radius or less is used, it is sufficient to show the length and bearing of the main chords, the radius at one (1) end of the curve, and the central subtended.~~

11. *Lot information*. The plat shall indicate the area, proposed setbacks**, proposed and existing easements**, and exact location and distance of all structures and other physical improvements in relation to proposed lot lines.
12. *Zoning*. Zoning boundary lines and proposed use of property.
13. *North point, etc*. Title, **bar** scale, north arrow, **basis of bearing,** date of preparation**,** and date of each successive revision.
14. *Floodplains, etc*. The extent and location of floodplains, floodways or other waterways of record; elevations of which, shall be based on applicable Flood Insurance Studies, Flood Insurance Rate Maps, Flood Boundary and Floodway Maps.
15. *Location of model home*. The location of the model home or spec. house, if applicable, as it occupies a platted lot in the subdivision.
16. *Commercial and industrial subdivisions*. Final Plats~~ for industrial or commercial subdivisions~~ shall delineate who will be responsible for addressing open space, landscaping and buffer yard requirements.
17. *Notes and related information*. Notes pertaining to particular items such as:
    a. Access limitations;
    b. Total area;
    c. Total number of lots;
    d. Smallest/largest lot;
    e. Replat information;
    f. Source of title;
    g. Recording information for covenants and restrictions.
18. ~~*Minimum finished floor elevations:* provide in a table or by other means, minimum finished floor elevations for each lot created by the subdivision, typically 1 ft above top of curb height directly adjacent.~~
19. ***Sinkholes*. The extent and location of sinkholes must be shown, the location of which shall be based on the latest data from the Greene County Assessor's Department, a report conducted by a Geotechnical Engineer, or a source approved by the BUILDS Department Administrator or their designee. Any sinkhole and its associated thirty-foot "No Build" buffer zone must be entirely contained within a common lot.**
20. ***Dedications of Off Site Right of Way and Easements to the City* All right of way for streets and easements for proposed drainage, sewer and water extensions located outside existing easements or right-of-way, shall be dedicated to the City via formal legal instruments. This shall include dedication for streets, temporary construction, and permanent easements and shall be shown and or noted on Final Plat. Depending upon the number of landowners and the complexity of the proposed street or utility extensions the City may require a property owner's exhibit accompanied by an opinion of title as issued by a recognized title company.**

410.290 Professional~~Registered~~ Land Surveyor's Certificate

A certification shall be included on the plat by a ~~registered~~Professional ~~l~~Land ~~s~~Surveyor to the effect that the plat represents a survey made by him/her, and that the locations of all required survey monuments~~,~~

~~installed or to be installed,~~ are correctly shown thereon. The months and year during which the survey was made shall be shown. The certification block shall substantially conform to the following.

That I, _____do hereby declare that this plat was prepared under my supervision from an actual survey of the land herein described prepared by _____ dated _____ and signed by _____ P.L.S. No. _____ and that the corner monuments and lot corner pins shown herein were placed under the personal supervision of _____ P.L.S. No. _____ in accordance **all applicable portions of the current Missouri Standards for Property Boundary Surveys as promulgated by the Department of Agriculture, Division of Weights, Measures and Consumer Protection.** ~~with the Division of Geology and Land Survey, Missouri Department of Natural Resource's "Current Missouri Minimum Standards for Property Boundary Surveys as Promulgated by the Missouri Department of Natural Resources".~~

Date Prepared _____

Signature: _____

Missouri Professional Land Surveyor No. _____

Date: _____

410.300 Owner's Certificate

A signed statement, substantially conforming to the following shall be included on the plat, which certifies that he/she had title to the land being subdivided and all access rights as represented on the plat are hereby dedicated. This certification block shall include a notary blank.

OWNER(S) DEDICATION

As owner(s) I/We, Owner(s) Name have caused the land described on this plat to be surveyed, divided, mapped, and all access rights reserved and dedicated as represented on the plat. I/We hereby dedicate, grant, and convey right-of-way and easements shown hereon to the City of Republic. Furthermore, I/We, certify that there are no suits, actions, liens, or trusts on the property conveyed herein, and warrant generally and specially the property conveyed for public use and will execute such further assurances as may be required.

_____
Name of Owner(s) and/or Subdivider

Date: _____

410.310 Certificate Of Taxes Paid

The plat shall contain a certification block for the City and County Official to the effect that there are no unpaid taxes and unpaid special assessments due and payable at the time of plat approval. The certification block shall substantially conform to the following:

CERTIFICATE OF TAXES PAID There are no unpaid taxes due and payable at the time of plat approval and no unpaid special assessments, whether or not due and payable at the time of plat approval on any of the lands included in this plat, and all outstanding taxes and special assessments have been paid on all property dedicated to public use.

_____
Parcel Number

_____
County Collection Official

_____
Date

410.320 City Council Certificate

A statement of approval by the City Council indicating the date and ordinance number in which Final Plat was accepted and approved. The certification block shall substantially conform to the following.

APPROVAL BY THE CITY COUNCIL

I, , City Clerk of the City of Republic, Greene County, Missouri, Do hereby certify that the Plat of _____ was presented to, accepted and approved by the City Council of said City of Republic, and approved by General Ordinance No. _____on the _____day of _____, 20_____.

_____
City Clerk

_____
Date

410.330 Compliance With Land Use Regulations Certification, Certificate Of Compliance With Zoning And Subdivision Regulations

The Plat shall include a signature block establishing conformance to the Land Use Regulations adopted by the City of Republic.

CERTIFICATE OF COMPLIANCE WITH ZONING AND SUBDIVISION REGULATIONS I, _____, City Planner of the City of Republic, Missouri, do hereby certify on the _____ day of _____, 20____, the Final Plat of _____ _____ conforms to the City of Republic Land Use Regulations, in accordance with Title IV of the Republic Code of Ordinances.

410.340 Recorder's Office

A title block shall be included on the plat for the Office of the Recorder of Deeds, Greene County, Missouri substantially conforming to the following.

IN THE RECORDER'S OFFICE I, _____, Recorder of Deeds, Greene County, Missouri, do hereby certify that the within instrument of writing was on the day of_____, 20 , duly filed for record and is recorded in the records in this office in book _____ page _____in testimony whereof, I have hereunto set my hand and affixed my official seal at my office in Springfield, Missouri, this _____day of _____, 20_____.

_____
Recorder of Deeds

_____
Date

410.350 Final Submittal

A. Final submittal of the Final Plat shall be prepared on two (2) reproducible original (mylars) 24" X 36" or those dimensions required by the County Recorder of Deeds. The following shall be submitted in addition to the original.

~~1. Sixteen (16) inches X twenty-four (24) inches scaled reproducible mylar for the City's plat book.~~

~~2. Six (6) blue line copies (24" X 36"). The developer may submit more than the required minimum of blue line copies.~~

1. ~~3.~~ All off-site easements and right-of-way deeds.
2. ~~4.~~ As-built drawings **as described in 410.210** of the phase being approved.
3. ~~5.~~ Permits, on file, from MoDNR for authorization to connect and place the water and sewer lines in service.
4. ~~6.~~ Copy of private and restrictive covenants to be recorded.
5. ~~7.~~ Electronic copies of the subdivision plat, infrastructure or as-built plans, etc.
6. ~~8.~~ The ~~community development~~ **BUILDS Department** staff may require additional elements to incorporate the final plat to the City map or to supply related government agencies with plats and reproducible prints, as needed.

410.355 Maintenance After Approval

The developer shall maintain and keep in repair all public infrastructure and detention areas for a period of one (1) year from the date the constructed improvements are approved by the City. To guarantee this maintenance, an acceptable maintenance bond, letter of credit or other acceptable security shall be provided in the amount of ten percent (10%) of the contract price of the improvements against defects in workmanship and materials for the above-mentioned one (1) year period. The bond, letter of credit or security shall be filed with the City and be from a surety company licensed to do business in the State of Missouri and in a form to be approved by the City Attorney.

Article 410-VI General Principles Of Design And Minimum Requirements For The Layout Of Subdivision

410.360 Functional Classification Of Streets

As defined in this Chapter, the following terms are used as follows:

EXPRESSWAY

A limited-access highway with some grade crossings and signals at major intersections intended for high-volume, moderate to high speed traffic across the metropolitan area with minimal access to adjacent land.

FREEWAY

A fully controlled access highway with grade-separated interchanges at major thoroughfares. Intended for high-volume, high-speed traffic movement between cities and across the metropolitan area and not intended to provide direct access to adjacent land.

PRIMARY ARTERIAL

A street primarily intended to provide for high-volume, moderate-speed traffic from one part of the City to another or between major activity centers. Providing access to abutting property is a secondary function and access points should be controlled.

SECONDARY ARTERIAL

A street which supplements and feeds the principal arterial system and is intended for moderate-volume, moderate-speed traffic. Access to abutting property is a secondary function and access points should be partially controlled.

COLLECTOR
A street which collects and distributes traffic to and from Local Streets and Arterial Streets. Collector Streets are intended for moderate volume, low speed and short length through trips. The main function of a Collector Street is to move traffic from Local Streets to the Arterial System. A secondary function of a Collector Street is to provide access to Local Streets.

LOCAL STREET
A street intended to provide access to abutting property while its secondary function is to provide traffic flow and movement. Local Streets, which comprise the largest percentage of total City street mileage, are designed for low-volume, low-speed traffic. ~~During the platting process a Local Street may be designated as a Local-Commercial, Local-High-density residential or Local-Low-density residential street, depending upon the predominant land use it will serve.~~

410.370 Design Standards -- Streets And Sidewalks

A. Streets shall be designed in accordance with the latest addition of the American Association of State Highway and Transportation Officials (AASHTO) *A Policy on Geometric Design of Highways and Streets.*

B. Sidewalks shall be 5' minimum width and conform to the latest standards identified by the American's with Disabilities Act (ADA).

410.380 Street Grades And Curves

A. The grades of streets shall not exceed the following except that, where unusual or exceptional conditions exist, the Planning Commission may modify these requirements:
   1. *Arterials.* Five percent (5%) maximum.
   2. *Collector streets*. Seven percent (7%) maximum.
   3. *Local streets, service drives and alleys*. Ten percent (10%).
   4. *Pedestrian ways or crosswalks*. Twelve percent (12%), unless steps of an acceptable design are to be constructed.
   5. *Minimum grade*. In no event shall the minimum grade of any street be less than seventy-five hundredths percent (.75%) with lengths not to exceed two hundred (200) feet.
   6. *Changes in street grades*. All changes in street grades in excess of one percent (1%) shall be connected by vertical curves of a minimum length equal to fifteen (15) times the algebraic difference in the rate of grade for highways, thoroughfares and parkways; and one-half (½) of this minimum for all other streets.
   7. *Curvature of centerline*. **shall be designed in accordance with AASHTO's *A Policy on Geometric Design of highways and Streets*** ~~The radii of curvature on the centerline shall not be less than the following:~~

      a. ~~*Highways, etc.* Highways, thoroughfares and parkways: four hundred (400) feet.~~
      b. ~~*Local streets, etc.* Local streets, minor streets and service drives: one hundred (100) feet.~~

410.390 Easements To Be Granted To The City

A. Utility easements shall be provided adjacent to all lots and rights-of-way, the following minimum utility easements are required.
    1. Utility easements adjacent to right-of-way: ten (10) feet.
    2. Easements for off-site utilities: fifteen (15) feet.
    3. Easements for all other utilities: fifteen (15) feet.
    4. Temporary construction easements: sixty (60) feet.

410.395 Location Of Certain Public Utilities

A. The location of public utility easements shall be compliant with the following requirements:
    1. Proposed public utilities are prohibited in any location the City Engineer determines interferes with the operation or maintenance of any of the City's utility infrastructure or will otherwise interfere with the rights and reasonable convenience of property owners.
    2. Proposed public utilities located in residential subdivisions to be dedicated, owned, and/or maintained by the City of Republic are prohibited in the rear or side yard; exceptions may be granted by the City Engineer if no other alternative is available.

410.400 Access Management

A. *Freeways, Expressways, Primary Arterials*.
    1. When subdividing land, all parcels shall have direct frontage on a dedicated street to obtain access. Access to property via ingress/ egress easements shall not be allowed.
    2. When subdividing land adjacent to Freeways, Expressways and Primary Arterials, direct access from parcels to the arterial shall be prohibited. Access shall be provided to Freeways, Expressways and Primary Arterials via Local Streets, Collector Streets and Secondary Arterial Streets.
    3. If the land adjacent to the Freeway, Expressway or Primary Arterial is zoned for commercial land uses, a Secondary Circulation System shall be constructed according to the Major Thoroughfare Plan to control access and maintain traffic flow. The Secondary Circulation System shall be located at least four hundred forty (440) feet from the highway and run parallel to the highway thus creating reverse frontage lots.
    4. In the case of infill development along Freeways, Expressways and Primary Arterials, where direct access cannot be prevented because of prior platting or existing development patterns, joint access driveways shall be constructed.
    5. In the Site Plan review process, commercial property along Freeways, Expressways and Primary Arterials shall be required to construct Internal Circulation Systems between parcels to provide access management to the Arterial Street.
B. *Collector Streets And Secondary Arterial Streets*.
    1. When subdividing land adjacent to Secondary Arterial Streets and Collector Streets, direct access from parcels to the arterial or collector shall be prohibited.
    2. If the land adjacent to the Collector Street or Secondary Arterial Street is zoned for commercial land uses, a Secondary Circulation System shall be constructed according to the Major Thoroughfare Plan to control access and maintain traffic flow. The Secondary Circulation System shall be located at least two hundred twenty (220) feet from a Secondary Arterial and one hundred twenty (120) feet from a Collector and shall run parallel to the highway thus creating reverse frontage lots.

3. In the case of infill development where direct access cannot be prevented because of prior platting or existing development patterns, the construction of turnaround drives shall be provided.

C. Access Restrictions by Classification of Roadway

1. All Distances are centerline-to-centerline. If roadway is owned/operated by another Authority Having Jurisdiction (AHJ) then follow their access spacing guidelines.

a. Collector

(1) Full access roadway intersections spacing shall be a minimum distance of 660'

(2) Commercial driveway spacing shall be a minimum distance of 160'

b. Secondary Arterial

(1) Full access roadway intersections spacing shall be a minimum distance of 660'

(2) Commercial driveway spacing shall be a minimum distance of 210'

c. Primary Arterial

(1) Full access roadway intersections spacing shall be a minimum distance of 1/4 mile.

(2) Commercial driveway spacing shall be a minimum distance of 330'

410.410 Street Layout

The street layout of the subdivision shall be in conformity with the adopted Transportation Plan. The design and arrangement of streets in the subdivision shall provide for the continuation of streets in adjacent subdivisions, where such extension is not prohibited by topographic conditions. Local Streets shall be laid out so as to discourage their use by through traffic. Streets shall be arranged in proper relation to topography so as to result in usable lots and safe and reasonable grades, both for the streets and driveways intersecting therewith.

410.420 Intersections

Proposed Collector Streets and Secondary Arterial Streets shall intersect one another at ninety-degrees (90°). The street centerline shall never be less than eighty-five degrees (85°) when a Collector Street or Secondary Arterial Street is involved. The street centerline should never be less than eighty degrees (80°) when a Local Street is involved. Four-way intersections shall be created for minor interior streets. Street jogs with centerline offsets of less than one hundred twenty-five (125) feet shall be prohibited on all types of streets.

410.430 Private Roads And Gated Developments

A. The Planning and Zoning Commission and the City Council may approve a plan or plat for a gated/private development if the proposal is found to meet acceptable planning and design guidelines and shall furthermore meet the following:

1. The proposed development shall not adversely affect **the adopted Major Thoroughfare Plan,** existing or planned neighborhoods, rights-of-way**,** and**/or** public infrastructure.
2. The proposal must provide adequate information relating to restrictive covenants, bylaws and contingencies to ensure the development will be sustainable and self sufficient.
3. Private or gated developments shall meet the general principles of design and minimum requirements for the layout of subdivision in the City of Republic; all improvements shall be constructed to City standards.

410.440 Blocks

A. The length of blocks in a subdivision shall be designed to be more than five hundred (500) feet and shall not exceed one thousand five hundred (1,500) feet as measured from centerlines of streets.
B. The width of blocks in a subdivision shall be designed to provide two (2) tiers of lots, except where the lots back onto a major street, natural feature, subdivision boundary or other feature or facility that requires reverse frontage.

410.450 Dead-End Streets And Cul-De-Sacs

A. Except as otherwise provided herein, temporary dead-end streets shall be approved where the layout of the subdivision requires streets to be built to property lines for future development of the street system. A temporary cul-de-sac will be required on roads more than one hundred fifty (150) feet in length. When the staging of development allows the developer to stage the construction of streets in the development.
B. Dead-end streets of reasonable length (normally not over five hundred (500) feet) may be approved where necessitated by topography or where, in the opinion of the ~~Planning and Zoning Commission~~**BUILDS Administrator or their designee**, they are appropriate for the type of development contemplated. At the end of all said streets, cul-de-sacs shall be built.
C. Cul-de-sac streets may be allowed if the street does not exceed five hundred (500) feet in length measured from the centerlines and the closed end shall have a turnaround encompassing a minimum right-of-way diameter of one hundred (100) feet.
D. Sidewalks constructed on dead-end streets shall be extended to the end of the street and around the entire radius of the cul-de-sac.

410.460 Street To Extend To Boundary Lines

A. Proposed streets shall be extended to the boundary lines of the tract to be subdivided, unless prevented by topography or other physical conditions or unless, in the opinion of the Planning and Zoning Commission, such extension is not necessary or desirable for the future development of adjacent tracts.
B. Where appropriate to the design, proposed streets shall be continuous and in alignment with existing, planned or platted streets with which they are to connect. It is not the intent of these regulations to require that streets be designed in a grid-fashion. Streets shall be designed to accommodate natural obstacles, such as known sinkholes, floodplains, pipelines, streams or other waterways.
C. Local streets shall connect with surrounding streets where necessary to permit the convenient movement of traffic between residential neighborhoods or to facilitate access to neighborhoods by emergency service vehicles or for other sufficient reasons, but connections shall not be permitted where the effect would be to encourage the use of such streets by substantial through traffic.

410.470 Sidewalks And Greenways

A. Unless otherwise approved, sidewalks shall be **5 feet in width and** required on both sides of all existing and new Secondary Arterial Streets and Collector Streets and one (1) side of all existing and new Local Streets, with the following exception:

1. The ~~Planning and Zoning Commission~~**BUILDS Administrator or their designee** may deem it unnecessary to require sidewalks on interior streets in industrial subdivisions.

B. The ~~Planning and Zoning Commission~~**City's Adopted Plans** may require greenways along Secondary Arterials ~~according to the City's Transportation Plan~~.

410.480 Water Supply

A. Where a public water supply main is reasonably accessible, in the judgment of the Planning and Zoning Commission, the subdivision shall be provided with a looped water distribution system adequate to serve the area being platted, including a connection for each lot and appropriately spaced fire hydrants, in accordance with requirements set out below and in conformance with ~~"Construction Specifications for Public Improvements, City of Republic"~~**"Standard Specifications and Details for Water and Sewer Construction, City of Republic, Missouri"** on file at the offices of the City of Republic ~~Public Works~~ **BUILDS** Department and incorporated herein by reference. All water system plans shall be designed and installed in accordance with the City's Water System Master Plan. Main extensions, upgrades and related looping required by the plan shall be done so at the expense of the developer.

B. The minimum size of a water main ~~providing fire protection and serving fire hydrants~~ shall be six (6) inches in diameter. Larger mains shall be required, if necessary, to allow withdrawal of the required fire flow while maintaining the minimum residual pressure of twenty (20) pounds per square inch throughout the distribution system or to conform to the City's Water System Master Plan. ~~Mains not providing fire protection shall be no smaller than two (2) inches in diameter.~~ All mains shall be extended to adjacent property lines for future extension and looping.

C. *Fire Hydrants*.

1. Fire hydrants should be located in accordance with National Fire Protection guidelines in reference to fire flow requirements in heavy use areas and residential but shall be placed not more than five hundred (500) feet apart in heavy residential areas and not more than three hundred (300) feet apart in heavy business areas.
2. Fire hydrants located in heavy traffic areas, such as alleys or parking lots, shall be provided with protection against collision.
3. **Fire Hydrants shall be painted "safety yellow".**

410.490 Bridges And Culverts -- Closed Storm Sewers

A. *Bridges And Culverts*. Bridges, box culverts or concrete pipe culverts shall be provided where continuous streets or alleys cross watercourses in accordance with the design requirements of ~~Section 410.650. Each structure shall be designed to carry H-20 loadings~~**the Adopted Plans of the City** using construction materials and installation procedures conforming with ~~"Construction Specifications for Public Improvements, City of Republic"~~**"Standard Specifications and Details for Water and Sewer Construction, City of Missouri" and the "Stormwater Management and Design Criteria Manual",** on file at the offices of the City of Republic ~~Public Works~~ **BUILDS** Department and incorporated herein by reference.

B. *Closed Storm Sewers*.

1. Closed storm sewers shall be designed ~~for H-20 loadings and shall conform with "Construction Specifications for Public Improvements, City of Republic"~~**in accordance and shall conform to the Adopted Plans of the City** on file at the offices of the City of Republic ~~Public Works~~ **BUILDS** Department and incorporated herein by reference.

2. Closed storm sewers shall be designed at and constructed to grades such that the velocity therein shall not be less than three (3) feet per second nor greater than twelve (12) feet per second **during rain events**.
3. Closed storm sewers shall extend to the furthest downstream point of development with consideration given to velocities and to providing discharge energy dissipaters to prevent erosion and scouring along downstream properties.

410.500 Public Sanitary Sewer

Where a public sanitary sewer main is reasonably accessible, in the opinion of the Planning Commission, the subdivision shall be provided with a complete sanitary sewer system connected with such sewer mains, at a grade not less than one-half of one percent (.5%)**, unless approved by the City Engineer,** including a lateral connection for each lot. The sewer system shall be designed to extend to adjacent property lines for future development. Such system and connection shall comply with the regulations of the Missouri Department of Natural Resources and to the regulations established by the City of Republic.

~~**410.510 Subdivision Sanitary Sewer**~~

~~Where a public sanitary sewer system is not reasonably accessible, in the opinion of the Planning and Zoning Commission, but where plans for the installation of sanitary sewers in the vicinity of the subdivision have been prepared and approved by the Missouri State Water Pollution Board, the developer shall install sewers in conformity with such plans. Where immediate connection is not possible and until such connection with the sewer system in the district can be made, the use of private sewage treatment facilities may be permitted, provided such disposal facilities are installed and maintained in accordance with the regulations and requirements of the State Water Pollution Board and approved by the City of Republic.~~

410.520 Private Sewage Collection

Where no sewers are accessible and no plans for a sewer system have been prepared and approved, the developer shall either install a sewage collection and disposal system in accordance with the requirements of ~~Title VII: Utilities and/or~~**the City of Republic and** the latest adopted Building Code.

410.530 Planting

All landscaped strips, parkways and screening areas dedicated to the public shall be graded, seeded and planted and maintained in accordance with City regulations. Where shrubs are required for the purpose of screening, location, specimen, density and other pertinent features shall be in accordance with the City's regulations.

410.540 Street Name Signs

All informational and regulatory signs, including, but not limited to, street name signs, stop signs, etc., shall be installed in accordance with the regulations of the ***Manual on Uniform Traffic Control Devices* (MUTCD) and** City of Republic at the expense of the developer.

410.550 Utility Service

Where practical, easements for underground conduits for utility lines shall be provided along front, rear and side lot lines. All utilities, including, but not limited to, electricity, telephone and cable television, shall be buried underground for all major subdivisions.

410.560 Property Corner And Boundary Monumentation

Property monumentation and for permanent and semi-permanent monuments shall comply with the **current** Missouri ~~Minimum~~ Standards for Property Boundary Surveys.

410.570 Final Cleanup Of Developed Lots

The owners and/or developers of all new homes, duplexes, apartments or businesses constructed shall have thirty (30) days from the date of the completion of the structure to get all yards and lots graded and all items of construction removed from said yards and lots within thirty (30) days from the completion of said structure. If the owner and/or developer fails to properly grade and clean the lot and ~~have its~~**receive** approval by the ~~Building Inspector~~**BUILDS Administrator or their designee** ~~for the City of Republic~~, then each and every day after the thirty (30) day period shall be a separate violation of this Chapter and the owner and/or developer shall be subject to a fine of up to one thousand dollars ($1,000.00) for the violation of this Chapter. The ~~Building Inspector~~**BUILDS Administrator or their designee** shall have, in accordance with the latest adopted Building Code, the authority to extend this requirement at ~~his or her~~**their** discretion.

410.580 Street Lights

A. Public street lights on ~~residential~~ **local** streets shall be spaced between two hundred fifty (250) feet and three hundred fifty (350) feet apart, at street intersections and cul-de-sacs. Street light spacing on all roads with a classification of collector or above shall be determined on a case-by-case basis.
B. Wires connecting street lights in new subdivisions shall be buried underground at the expense of the developer and in accordance with Chapter **410** Subdivision Regulations.
C. All poles installed in new subdivisions for the specific purpose of providing on-street lighting **for public streets** shall be composed of concrete, fiberglass, steel, aluminum or other materials not composed of wood.
D. The developer of the subdivision shall bear the expense associated with meeting these standards. These requirements shall apply only to the installation of new street lights in major subdivisions platted after approval of this Code.
E. Once constructed and dedicated to the City, the ~~Director of Public Works~~ **BUILDS Administrator** is authorized to temporarily de-energize any street light until such time as construction is initiated on a new inhabitable structure within one hundred sixty (160) feet of the location of the street light. Street lights at street intersections and cul-de-sacs shall not be de-energized under this provision.

Article 410-VII Stormwater Management For Public And Private Improvements

410.650 General Provisions

A. ~~*Scope.* These design criteria set forth the minimum standards for design of storm drainage facilities on public right-of-way and private property in the City of Republic.~~

A. ~~*B.*~~ *Authority.*
   1. ~~These design criteria and standards set forth herein~~ **The Stormwater Management and Design Criteria Manual** ~~have been~~ **has been** adopted by ~~the Planning and Zoning Commission and~~ the City Council *in accordance with the procedures and authority set forth in the City of Republic*.
   2. Any development or grading begun after the date of passage of these criteria and standards which does not comply with the requirements set forth ~~herein~~ **in The Stormwater Management and Design Criteria Manual** shall be deemed to be in violation

of the requirements established herein; and shall be subject to enforcement measures and penalties set forth in Section **100.220** — General Penalty.

B. ~~*C.*~~ *Interpretations.*

1. Where any of the provisions ~~contained herein~~ may be unclear or ambiguous as they pertain to a particular site or situation, interpretations of the policies, criteria and standards set forth herein shall be made in writing by the **BUILDS Administrator or their designee** ~~Community Development Director~~.
2. Such written interpretations shall be kept on file for future reference for use in similar situations and shall be incorporated in subsequent revisions for the standards, if deemed necessary for general reference.

~~D. *Appeals.*~~

~~1. Where disagreements may arise over the interpretation of the requirements set forth herein, appeals may be made to the City Planner upon written request.~~

~~2. Information and supporting documentation for the appeal shall be submitted with the request. The City Planner shall forward the information to the Public Works Director, Community Development Director or the City Engineer within three (3) calendar days following receipt of the information.~~

C. ~~*E.*~~ *Approvals And Permits Required*.

1. *Grading permit*. Storm drainage facilities may not be constructed or altered without review and approval of the plans by the City and issuance of a Grading Permit by the City for subdivisions or for commercial or other sites.
2. *National Pollutant Discharge Elimination System (NPDES) stormwater permit*.
    a. Provisions of the 1987 Clean Water Act require that certain stormwater discharges obtain an NPDES stormwater permit. In Missouri, these permits are administered by the Missouri Department of Natural Resources **(MDNR)**.
    b. Federal rules for NPDES stormwater discharges are contained in 40 CFR Parts 122, 123 and 124 of the Code of Federal Regulations. State NPDES stormwater regulations are contained in 10 CSR 20-6.200 of the Code of State Regulations. Additional provisions for NPDES stormwater permits for land disturbance activities and information regarding the City of Republic General Permit for land disturbance activities are contained in Section **410.710** of these Criteria.
    c. *"404" Permit*.
        (1) For certain activities, which involve the discharge of dredged or fill materials into the waters of the United States a Department of the Army permit may be required as set forth Section 404 of the Clean Water Act. Rules for 404 permits are contained in 33 CFR Parts 320 through 330 of the Code of Federal Regulations.
        (2) Determination of applicability for Section 404 requirements are generally made by the Kansas City or Little Rock District office of the Corps of Engineers.
        (3) A brochure regarding the Corps of Engineers regulatory program may be obtained from the Corps offices.

D. ~~*F.*~~ *Coordination With Other Jurisdictions*.

1. Where proposed storm drainage facilities are located on property adjoining to other local government jurisdictions design of storm drainage facilities shall include provisions to

receive or discharge stormwater in accordance with the requirements of the adjoining jurisdiction, in addition to meeting City requirements.

2. In these cases ~~two (2) additional sets of~~ plans shall be submitted and will be forwarded to the adjoining jurisdiction for review and comment.
3. No grading or construction of storm drainage facilities may commence without prior notification of the Missouri One Call utility warning system at 1-800-DIG-RITE, as required by law.

E. ~~*G.*~~ *Communications And Correspondence*. Communications and correspondence regarding stormwater plan review, policies, design standards, criteria or drainage complaints shall be directed to ~~the City Planner at the City of Republic, 213 N. Main, Republic, Missouri 65738, Phone: 417-732-3354~~**BUILDS Department staff**.

F. ~~*H.*~~ *Ownership And Maintenance*.

1. *Improvements on public road right-of-way*. Storm drainage improvements on public right-of-way shall, upon acceptance of the constructed improvements, become the property of; and shall be maintained by the City of Republic.
2. *Improvements on private property*.
   - **a.** Storm drainage improvements on private property shall be maintained by the owner of the lot upon which the improvements are located or by the Homeowners' Association for improvements located in common areas. **In such cases as an overland drainage easement is located on a private lot, the area of the drainage easement shall not count toward the minimum square footage required for the lot.**
   - b. All such improvements, which serve a drainage area, shall be located in drainage easement and the public shall have such rights of access to repair or maintain such facilities as set forth in Section **410.680(E)(4)**.

410.660 Stormwater Planning And Design

A. ~~*Stormwater Management Goals*. In order to ensure protection of the general health and welfare of the citizens of the City of Republic, planning and design of stormwater management measures shall meet the following goals:~~

1. ~~Prevent damage to residential dwellings and other building structures from floodwaters.~~
2. ~~Maintain emergency vehicle access to all areas during periods of high water.~~
3. ~~Prevent damage to roads, bridges, utilities and other valuable components of the community's infrastructure from damage due to flood waters and erosion.~~
4. ~~Prevent degradation of surface and groundwater quality from storm water runoff; preserve and protect quality of the environment; and promote conservation of the City's natural resources.~~
5. ~~Minimize floodwater and erosion damage to lawns, recreational facilities and other outdoors improvements.~~
6. ~~Minimize traffic hazards from runoff carried in streets and roads.~~
7. ~~Comply with applicable State and Federal laws and regulations.~~
8. ~~Meet the foregoing goals in a manner which is cost effective and which minimizes the cost of housing and development while encouraging sound development practices.~~
9. ~~Encourage innovative and cost effective planning and design of stormwater management facilities.~~

10. Encourage multiple purpose design of stormwater management facilities, to provide opportunities for recreational use and other benefits to the community wherever possible.

The standards and criteria set forth herein provide the minimum standards for planning and design of stormwater facilities. Where a particular plan or design may be found to be in conflict with a specific standard, achievement of the goals set forth above will have precedence.

B. *General Planning And Design Principles*.

1. The City of Republic recognizes that stormwater management is an important component of overall land use planning.
2. The City of Republic further recognizes that proper stormwater planning significantly reduces the long-term costs to the community both in terms of infrastructure cost and property losses due to flood damage. It is much more cost effective to prevent flood damage by proper design and construction, than to repair and remediate problems, which have occurred through poor planning and design.
3. The following general principles must be followed in preparing the grading and storm drainage plans for all development sites:
    a. *Recognize the existing drainage system*. The storm drainage system differs from other utility systems in very important ways:
        (1). There is an existing natural drainage system.
        (2). It is only needed when runoff occurs.
        (3). The capacity of the system varies greatly depending upon how much it rains.
        (4). The system does not have to be constructed of man-made components in order to function.
    b. Because of these characteristics there has been a historic inclination for fragmented planning and design of storm drainage facilities.
    c. Proper planning of storm drainage facilities must begin with the recognition of the existing system, and include necessary provisions for preserving or altering the existing system to meet the needs of proposed development or construction.
    d. Methods of delineating existing watercourses are outlined in Section 410.670.
4. *Allow for increase in runoff rates due to future urbanization*.
    a. As areas urbanize, peak rates of runoff increase significantly. The City of Republic may require temporary detention and storage of increased volumes of urban runoff in order to minimize increases in flow rates as urbanization occurs. However, the cumulative effects of on-site detention are difficult to predict and control and development of comprehensive basin-wide runoff models to determine these effects does not appear likely in the foreseeable future.
    b. For this reason, design of storm drainage improvements must be based upon the assumption of fully urbanized conditions in the area under consideration. No reduction in peak flow rates due to detention, unless an approved runoff model has been developed for the drainage basin under consideration. Any detention storage facilities whose effects are considered must be located within approved drainage easements.

5. *Provide for acceptance of runoff from upstream drainage areas*.

a. It is critical that provisions be made to receive runoff from upstream drainage areas. Drainage easements or public right-of-way must extend to a point where the upstream drainage area is no greater than five (5) acres.

b. Drainage easements or public right-of-way must extend to the point where existing watercourses enter the site. Where the upstream drainage area is five (5) acres or greater, but does not discharge onto the site through a defined watercourse, the drainage easement shall extend to the point of lowest elevation.

6. *Provide a means to convey runoff across the site*. Stormwater shall be conveyed across the site in a system of overland drainage ways and storm sewers. Overland drainage ways consists of streets, open channels, swales and overland flow within drainage easements.

7. *Discharge of runoff to downstream properties*.

a. Concentrated runoff shall be discharged only into existing watercourses, drainage easements or public road rights-of-way. Where none of these exist, a drainage easement which extends to the nearest watercourse, drainage easement or public road right-of-way must be obtained from the downstream property owner and proper provisions made for conveyance of the peak flow from the one percent (1%) annual probability (100-year) storm within the drainage easement.

b. One of the typical results of urbanization is that diffuse surface flow or "sheet flow" is replaced with concentrated points of discharge. Where concentrated flows are discharged to downstream properties proper provisions must be made to:

(1). Allow the flow to spread over the same area as would have occurred for the same rate of flow prior to the development, and

(2). Reduce the rate of velocity to rates at least equal to the pre-development values at the same rate of flow.

8. *Assess potential downstream flooding problems*.

a. It is important that a determination be made of conditions in the watershed downstream of each development site. Specifically it is important to determine whether there are existing structures, which are subject to an unacceptable flooding hazard.

b. If areas having an unacceptable flooding hazard occur downstream of a development site, either on-site detention for peak flow control or mutually agreed off-site improvements will be required, as set forth in Section 410.680.

9. *Assess potential water quality impacts on receiving waters*. Sediment, erosion and other water quality controls are required as set forth in Section **410.700** and Section **410.710**.

C. Drainage Easements. All areas subject to inundation during the major storm must be included in drainage easements. Specific standards for drainage easements to be provided for storm sewers, open channels and detention facilities are set forth in Section 410.680.

410.670 Stormwater Runoff Calculations

A. This Section outlines acceptable methods of determining stormwater runoff.

1. *General guidelines*.

a. For watersheds with a total tributary area less than two hundred (200) acres and a one percent (1%) annual probability (100-year) fully developed discharge less than three hundred (300) cfs, the design storm runoff may be analyzed using the rational formula.

b. For watersheds with a total tributary area greater than two hundred (200) acres or with a one percent (1%) annual probability (100-year) fully developed discharge greater than three hundred (300) cfs, the design storm runoff shall be analyzed using an approved hydrograph method.

2. *Rational formula.*

a. The rational formula, when properly understood and applied, can produce satisfactory results for urban storm sewer design. The rational formula is as follows:

Q = CIA

Where:

Q = Peak discharge in cubic feet per second.

C = Runoff coefficient which is the ratio of the maximum rate of runoff from the area to the average rate of rainfall intensity for the time of concentration.

I = Average rainfall intensity in inches per hour for a duration equal to the time of concentration.

A = Contributing watershed area in acres.

b. The basic assumptions made when applying the rational formula are:

(1) The rainfall intensity is uniform over the basin during the entire storm duration.

(2) The maximum runoff rate occurs when the rainfall lasts as long or longer than the basin time of concentration.

(3) Runoff response characteristics are relatively uniform over the entire basin.

(4) The time of concentration is the time required for the runoff from the most hydraulically remote part of the basin to reach the point of interest.

c. The drainage basin should be divided into sub-basins of a size where all of the basic assumptions apply.

3. *Time of concentration.*

a. Time of concentration, etc., is calculated by:

tc = ti + tt (5 minutes, minimum);where

ti = initial, inlet or overland flow time in minutes,

tt = shallow channel and open channel flow time in minutes.

b. Overland flow (sheet flow) time shall be calculated as:

ti = (n x L)0.8/(4.64 x S0.4) where

ti = initial, inlet or overland flow time in minutes,

n = Manning's n for sheet flow (from the following table),

L = Overland flow length in feet, (maximum of three hundred (300) feet),

S = Slope in feet per foot.

ROUGHNESS COEFFICIENTS (Manning's n) FOR SHEET FLOW SURFACE DESCRIPTION

Smooth surfaces (concrete, asphalt, gravel or bare soil)	0.011
Fallow (no residue)	0.050

Cultivated soils:	
Residue cover less than or equal to 20%	0.060
Residue cover greater than or equal to 20%	0.170
Grass:	
Short grass prairie	0.150
Dense grasses[1]	0.240
Bermuda grass	0.410
Range (natural)	0.130
Woods:[2]	
Light underbrush	0.400
Dense underbrush	0.800

NOTES:

1 Includes species such as weeping lovegrass, bluegrass, buffalo grass, blue grama grass and native grass mixtures.

2 When selecting n, consider cover to a height of about 0.1 feet. This is the only part of the plant cover that will obstruct sheet flow.

Shallow channel velocities may be estimated from Figure 3-1 in reference 11.

Open channel flow velocities may be estimated from Manning's equation. Open channel velocities are generally estimated under bank full conditions.

The basin time of concentration calculation techniques are described in detail in TR-55, Chapter 3 (reference 11).

4. *Hydrograph methods.*
    a. Methodologies.
        (1) The most common hydrograph techniques are those developed by the Corps of Engineers and the Soil Conservation Service. These methods are preferred, however other proven techniques will be accepted.

(2) The Corps of Engineers HEC-1 Flood Hydrograph Package and Soil Conservation Service TR-55 computer models are the preferred runoff models. Other models may be used with approval from the City.

(3) The runoff model must include the entire drainage basin upstream of the proposed development. The model shall be prepared in sufficient detail to ensure that peak runoff rates are reasonably accurate.

(4) The runoff model shall be developed for the following cases:

(5) Case 1: Existing conditions in the drainage basin prior to development of the applicant's property.

(6) Case 2: Existing conditions in the drainage basin with developed conditions on the applicant's property.

(7) Case 3: Fully developed conditions in the entire drainage basin.

b. Rainfall.

(1) Rainfall depth-duration-frequency and intensity-duration-frequency curves for the Republic area are included in the standard drawings. The design rainfall intensities were developed from the U.S. Department of Commerce, National Weather Service, Technical Paper 40 (reference 19) and the National Oceanic and Atmospheric Administration publication "HYDRO-35" (reference 9).

(2) Rainfall depths for use with hydrograph techniques shall be taken from "Rainfall Frequency atlas of the Midwest, Bulletin 71" (reference 23).

(3) Rainfall shall be distributed in time using Huffs Distribution or the Pilgrim-Cordery Distribution adapted to local rainfall data (references 20 and 21) as shown in the following table. Other distributions may be used upon approval from the City.

Pilgrim-Cordery Method Synthetic Rainfall Mass Curves

Cumulative Fraction of Depth	Cumulative Fraction of Storm Duration				
	1 Hour	2 Hour	3 Hour	4 Hour	6 Hour
.00	.00	.00	.00	.00	.00
.05	.03	.03	.03	.02	.05
.10	.07	.05	.05	.03	.09
.15	.11	.10	.06	.05	.14
.20	.14	.17	.09	.06	.20
.25	.17	.22	.11	.08	.28

.30	.23	.25	.13	.14	.35
.35	.29	.27	.19	.20	.41
.40	.35	.29	.31	.27	.43
.45	.41	.30	.39	.33	.46
.50	.47	.31	.44	.38	.49
.55	.56	.41	.47	.47	.60
.60	.65	.51	.54	.56	.70
.65	.73	.60	.64	.64	.80
.70	.82	.69	.70	.74	.86
.75	.91	.78	.73	.83	.89
.80	.93	.82	.81	.87	.93
.85	.95	.87	.89	.90	.96
.90	.97	.92	.94	.93	.97
.95	.99	.96	.98	.97	.98
1.00	1.00	1.00	1.00	1.00	1.00

410.680 Stormwater Drainage Structures

A. *Inlets.*

1. *Inlet locations*. Inlets shall be provided at locations and intervals and shall have a minimum inflow capacity such that maximum flooding depths set below are not exceeded for the specified storm; at all sump locations where ponding of water is not desired and where drainage cannot be released at the ground surface.
2. *Inlet interception capacities.*
    a. Inlet capacities shall be determined in accordance with the Federal Highway Administration HEC-12 Manual (reference 5).
    b. Nomographs and methods presented in the Neenah Inlet Grate Capacities report (reference 12) may also be used where applicable.

c. The use of commercial software utilizing the methods of HEC-12 is acceptable. It is recommended that software be pre-approved for use by the City.

3. *Clogging factors.* The inlet capacities determined as required in this Section must be reduced as follows, in order to account for partial blockage of the inlet with debris:

Inlet Type And Location	**Clogging Factor**
Type SS Curb Opening Inlets:	
on grades	0.9
in sumps	0.8
Grated Inlets:	
on grades	0.6
in sumps	0.5

Inlet lengths or areas shall be increased as required to account for clogging.

4. *Interception and bypass flow*. It is generally not practical for inlets on slopes to intercept one hundred percent (100%) of the flow in gutters. Inlets must intercept sufficient flow to comply with street flooding depth requirements. Bypass flows shall be considered at each downstream inlet, until all flow has entered approved storm sewers or drainage ways.

5. *Allowable street depths*. Urban streets are a necessary part of the City drainage system. The design for the collection and conveyance of storm water runoff is based on a reasonable frequency and degree of traffic interference. Depending on the street classification, (i.e. local, collector, etc.) portions of the street may be inundated during storm events. Drainage of streets are controlled by both minor and major storm events. The minor system is provided to intercept and convey nuisance flow. Flow depths are limited for the major storm to provide for access by emergency vehicles during most flood events. When the depths of flow exceed the criteria presented in this Section a storm sewer or open channel system is required.

a. *General design guidelines*.

(1). *Allowable flow depths:* Flow in the street is permitted with allowable depths of flow as follows:

(2). *Local streets:* Crown of the street for the runoff from a 5-year rainfall, top of curb for runoff from a 25-year rainfall. Runoff from a 100-year rainfall should be contained within the right-of-way.

(3). *Collector streets:* The equivalent of one (1) ten (10) foot driving lane must remain clear of water during a 5-year rainfall, top of curb for runoff from a 25-year rainfall. Runoff from a 100-year rainfall should be contained within the right-of-way.

(4). *Arterials and parkways:* Two (2) ten (10) foot lanes must remain clear of water, one (1) in each direction, during a 5-year rainfall. Top of curb for runoff from a 25-year rainfall. Runoff from a 100-year rainfall should be contained within the right-of-way. Where allowable depths are exceeded a storm sewer system must remove the excess water.

(5). *Arterials and parkways:* Two (2) ten (10) foot lanes must remain clear of water, one (1) in each direction for the 25-year storm. For the 100-year storm, a maximum of six (6) inches at the crown, depth at the gutter shall not exceed eighteen (18) inches. Where allowable depths are exceeded a storm sewer system must remove the excess water.

b. *Cross flow*. Cross flow at intersections is permitted up to the following depth.

Street Classification	**5-year Storm**	**25-year Storm**
	Allowable Depth	**Allowable Depth**
Local	6" in cross pan flow line	12" at gutter
Collector	No cross flow permitted	6" at gutter
Arterial or Parkway	No cross flow permitted	No cross flow permitted

c. *Hydraulics*. The allowable storm capacity of each street section with curb and gutter is calculated using the modified Manning's formula for both the 2-year and 25-year storm event.

	Q = 0.56(Z/n)S1/2d8/3
Where,	Q = discharge in cubic feet per second
	Z = cross slope of the street in feet per foot
	d = depth of flow at the gutter in feet

	S = longitudinal slope of the street in feet per foot
	n = Manning's roughness coefficient

6. *Types of inlets allowed*.

a. *Public streets*.

(1). *Curb opening inlets*. Type "SS" standard curb opening inlets as shown Drawing 140 shall be used for public streets with curb and gutter.

(2). *Graded inlets*.

In general the use of grated inlets in streets, which require adjustment when streets are repaved will not be permitted.

Where conditions are such that curb inlets cannot intercept the required rate of flow, necessary to control street flooding depth or to provide diversion of flow to detention, sedimentation or infiltration basins, "trench inlets" with veined grates may be specified with approval of the City.

Other types of inlets will not be permitted unless approved by the City.

b. *Outside of public right-of way*. The type of inlets specified outside of public right-of-way is left to the discretion of the designer provided the following criteria are met:

(1). Maximum flooding depths for the major or minor storm as set forth above are not exceeded.

(2). General safety requirements set forth below are met.

(3). All inlets shall be depressed a minimum of two (2) inches below the surrounding grade to allow proper drainage to the inlet and prevent inadvertent ponding in the area around the inlet.

(4). Inlets in pavements shall be provided with a concrete apron.

7. *General safety requirements*. All inlet openings shall:

a. Provide for the safety of the public from being swept into the storm drainage system; the maximum allowable opening shall not exceed six (6) inches in width.

b. Be sufficiently small to prevent entry of debris which would clog the storm drainage system;

c. Be sized and oriented to provide for safety of pedestrians, bicyclists, etc.

B. *Storm Sewers*.

1. *Design criteria*.

a. *Design storm frequency*. The storm sewer system, beginning at the upstream end with inlets, is required when the 5-year peak flow in the street exceeds five (5) cfs or when allowable street depths are exceeded. Allowable street depths are specified above.

b. *Construction materials*. Storm sewers may be constructed using reinforced concrete, corrugated metal (steel or aluminum) or plastic pipe. The materials, pipes or appurtenances shall meet one (1) or more of the following standards:

PIPE MATERIAL	**STANDARD**

Reinforced Concrete Pipe — Round	ASTM C-76 or AASHTO M-170
Reinforced Concrete Pipe — Elliptical	ASTM C-507 or AASHTO M-207
Reinforced Concrete Pipe — Joints	ASTM C-443 or AASHTO M-198
Reinforced Concrete Pipe — Arch	ASTM C-506 or AASHTO M-206
Pre-cast Concrete Manholes	ASTM C-478 or AASHTO M-199
Pre-cast Concrete Box Pipe	ASTM C-789/C-850 or AASHTO M-259/M-273
Corrugated Steel Pipe-Metallic Coated for Sewers and Drains	AASHTO M-36
Corrugated Aluminum Alloy Pipe and Under Drains	AASHTO M-196
Bituminous Coated Corrugated Metal Pipe and Pipe Arches	AASHTO M-190
Corrugated PVC Pipe	ASTM D-3034 and ASTM F-679
Corrugated Polyethylene Pipe	ASTM D-1248

c. *Vertical alignment*.

(1). The sewer grade shall be such that a minimum cover is maintained to withstand AASHTO HS-20 loading on the pipe. The minimum cover depends upon the pipe size, type and class and soil bedding condition, but shall not be less than one (1) foot from the top of pipe to the finished grade at any point along the pipe. If the pipe encroaches on the street subgrade, approval is required. Manholes will be required whenever there is a change in size, direction, elevation grade and slope or where there is a junction of two (2) or more sewers. The maximum spacing between manholes for storm sewers (cross sectional area less than twenty-five (25) square feet) shall be four hundred (400) feet. For large storm sewers (cross sectional area greater than twenty-five (25) square feet), manholes for maintenance access need only be placed a minimum of every five hundred (500) feet; access to the laterals can be obtained from within the larger storm sewer.

(2). The minimum clearance between storm sewer and water main (for new construction), either above or below shall be twelve (12) inches. Concrete encasement of the water line will be required for clearances of twelve (12)

inches or less when the clearance between existing water mains cannot be obtained.

(3). The minimum clearance between storm sewer and sanitary sewer (for new construction), either above or below, shall be eighteen (18) inches. In addition, when an existing sanitary sewer main lies above a storm sewer or within eighteen (18) inches below, the sanitary sewer shall have an impervious encasement or be constructed of structural sewer pipe for a minimum of ten (10) feet on each side of the storm sewer crossing.

(4). Siphons or inverted siphons are not allowed in the storm sewer system.

d. *Horizontal alignment*.

(1). Storm sewer alignment between manholes shall be straight except when approved by the City. Approved curvilinear storm sewers may be constructed by using radius pipe. The radius requirement for pipe bends is dependent upon the manufacturer's specifications.

(2). A minimum horizontal clearance of ten (10) feet is required between sanitary and water utilities and the storm sewer.

(3). The permitted locations for storm sewer within a street ROW are: (a) on centerline, (b) between centerline and curb and (c) behind the curb. Storm sewer shall not be placed on the area within the wheel lanes of the pavement.

e. *Pipe size*. The minimum allowable pipe size for storm sewers is dependent upon a diameter practical from the maintenance standpoint. For storm sewers less than fifty (50) feet in length the minimum allowable diameter is fifteen (15) inches. All other pipe shall have a minimum diameter of eighteen (18) inches.

f. *Storm sewer capacity and velocity*.

(1). Storm sewers should be designed to convey the design storm (25-year) flood peaks without surcharging the storm sewer. The sewer may be surcharged during larger floods and under special conditions when approved by the City.

(2). The capacity and velocity shall be based on the Manning's n-values presented in Table I. The maximum full flow velocity shall be less than fifteen (15) fps. Higher velocities may be approved by the City if the design includes adequate provisions for uplift forces, dynamic impact forces and abrasion. The minimum velocity in a pipe based on full flow shall be two and one-half (2.5) fps and the minimum slope shall be one-half percent (0.50%) to avoid excessive accumulations of sediment. The energy grade line (EGL) for the design flow shall be no more than six (6) inches below the final grade at manholes, inlets or other junctions. To insure that this objective is achieved, the hydraulic grade line (HGL) and the energy grade line (EGL) shall be calculated by accounting for pipe friction losses and pipe form losses. Total hydraulic losses will include friction, expansion, contraction, bend, manhole and junction losses. The methods for estimating these losses are presented in the following Sections.

g. *Storm sewer outlets*. All storm sewer outlets into open channels shall be constructed with a headwall and wingwalls or a flared end section. Riprap or other approved material shall be provided all outlets.

h. *Hydraulic evaluation*. Presented in this Section are the general procedures for hydraulic design and evaluation of storm sewers. The user is assumed to possess a basic working knowledge of storm sewer hydraulics and is encouraged to review textbooks and other technical literature available on the subject.

i. *Pipe friction losses*. Pipe friction losses are estimated using Equation 1001 and Manning's formula (Equation 1002) which are expressed as follows:

	$Hf = Sf \times L$	(1001)
Where,	Hf = head loss due to friction (feet)	
	Sf = friction slope from Manning's equation (feet per foot)	
	L = length of pipe segment (feet)	
and	$V = 1.49 \times R^{2/3} \times Sf^{1/2}/n$	(1002)
Where,	V = velocity of flow (feet per second)	
	R = hydraulic radius = A/WP (feet)	
	Sf = friction slope (feet per foot)	
	A = area of flow (square feet)	
	WP = wetted perimeter (feet)	
	n = Manning's roughness coefficient (Table I)	

j. *Pipe form losses*. Generally, between the inlet and outlet, the flow encounters, in the flow passageway, a variety of configuration such as changes in pipe size, branches, bends, junctions, expansions and contractions. These shape variations impose losses in addition to those resulting from pipe friction. Form losses are the result of fully developed turbulence and can be expressed as follows:

	$HL = K (V^2/2g)$	(1003)
Where,	HL = head loss (feet)	
	K = loss coefficient	
	$V^2/2g$ = velocity head (feet)	

	g = gravitational acceleration (32.2 ft/sec^2).	

The following is a discussion of a few of the common types of form losses encountered in storm design.

(1). *Expansion losses*. Expansion losses in a storm sewer will occur when the sewer outlets into a channel. The expansion will result in a shearing action between the incoming high velocity jet and the surrounding outlet boundary. As a result, much of the kinetic energy is dissipated by eddy currents and turbulence. The loss head can be expressed as:

	$HL = Kx (V1^2/2g)(1-(A1/A2))^2$	(1004)
Where,	A = cross section area in square feet	
	V1 = average upstream pipe flow velocity, feet per second	
	Kx = expansion loss coefficient.	

Subscripts 1 and 2 denote the upstream and downstream sections respectively. The value of Kx is about one (1.0) for a sudden expansion (such as an outlet to a channel) and about two tenths (0.2) for a well-designed expansion transition. Table II presents the expansion loss coefficient for various flow conditions.

(2). *Contraction losses*. The form loss due to contraction is:

	$HL = Kc(V2^2/2g)(1-(A2/A1)^2)^2$	(1005)
Where,	Kc = Contraction loss coefficient	

Kc is equal to 0.5 for a sudden contraction and about 0.1 for a well-designed transition. Subscripts 1 and 2 denote the upstream and downstream sections respectively. Table II presents the contraction loss coefficient for various flow conditions.

(3). *Bend losses*. The head losses for bends in excess of that caused by an equivalent length of straight pipe may be expressed by the relation:

	$HL = Kb(V2/2g)$	(1006)

~~Where,~~	~~Kb = Bend coefficient~~	

~~The bend coefficient has been found to be a function of: (a) the ratio of the radius of curvature of the bend to the width of the conduit, (b) deflection angle of the conduit, (c) geometry of the cross section of flow and (d) the Reynolds Number and relative roughness. Recommended bend loss coefficients for standard bends, radius pipe and bends through manholes are presented in Table II.~~

~~(4). *Junction and manhole losses*. A junction occurs where one (1) or more branch sewers enter a main sewer, usually at manholes. The hydraulic design of a junction is in effect the design of two (2) or more transitions, one (1) for each flow path. Allowances should be made for head loss due to the impact at junctions. The head loss at a junction for each pipe entering the junction can be calculated from:~~

	~~$HL = (V2^2/2g) = Kj(V1^2/2g)$~~	~~(1007)~~
~~Where,~~	~~V2 = the outfall flow velocity~~	
	~~V1 = the inlet velocity~~	
	~~Kj = junction loss coefficient~~	

~~Because of the difficulty in evaluating hydraulic losses at junctions (Reference 6) due to the many complex conditions involving pipe size, geometry of the junction and flow combinations, a simplified table of loss coefficients has been prepared. Table II presents the recommended energy loss coefficients for typical manhole or junction conditions encountered in the urban storm sewer system.~~

~~(5). *Partially full pipe flow*. When a storm sewer is not flowing full, the sewer acts like an open channel and the hydraulic properties can be calculated using open channel.~~

~~(6). *Storm sewer outlets*. When the storm sewer system discharges into an open channel, additional losses, in the form of expansions losses, occur at the outlet. For a headwall and no wing walls, the loss coefficient Ke is one (1.0). For a headwall with forty five degree (45°) wing walls, the loss coefficient is about one and fourteen hundredths (1.14). For a flared end section (which has a D2/D1 ratio of two (2) and a theta angle of around thirty degrees (30°)) the loss coefficient is approximately one-half (0.5).~~

~~(7). *Connection pipes*.~~

(A). Connector pipes are used to convey runoff from an inlet to the storm sewer. If, however, the storm sewer runs through the inlet, then a connector pipe is not needed. Connector pipes can connect a single inlet to the storm sewer or they can be connected in a series.

(B). These bends, turns and flows through the connector pipe give rise to three (3) hydraulic losses: a change from static to kinetic energy to get the water moving through the connector pipe, an entrance loss from the inlet to the connector pipe and a friction loss along the length of the connector pipe. The total head loss in the connector pipe can be calculated from the following equation:

	Hcp = Hv + Ke x Hv + Sf x L	(1009)
Where,	Hcp = head loss in the connector pipe (feet)	
	Ke = Entrance loss coefficient	
	Hv = velocity head in the pipe, assuming full pipe flow (feet)	

and the other variables are as previously defined. The value of the entrance loss coefficient is determined from Table II.

(C). If the connector pipes are connected in series, the head loss in each pipe is calculated from Equation 1009 and the total head loss is the summation of the individual head losses.

2. *Easements*. Easements shall be provided for all storm sewers constructed in the City of Republic that are not located within public rights-of-way. The minimum easement widths are as follows:
   a. For pipes forty-eight (48) inches or less in diameter or width the required easement width is fifteen (15) feet.
   b. For pipes and boxes greater than forty-eight (48) inches in width the required easement width is fifteen (15) feet plus half the width of the proposed storm sewer.
   c. Storm sewers greater than eight (8) feet in depth to the flow line may require additional easement width.
   d. All easements required for construction, which are not included on the final plat shall be recorded and filed with the City prior to approval of the construction drawings.

C. *Design Standards For Culverts*.
1. *Structural design*. All culverts shall be designed to withstand an HS-20 loading in accordance with the design procedures of AASHTO "Standard Specifications for Highway Bridges". The designer shall also check the construction loads and utilize the most severe loading condition. The minimum allowable cover is one (1) foot.
2. *Design capacity*. Culverts shall be designed to pass a 25-year storm with one (1) foot of freeboard prior to overtopping the road or driveway.

3. *Headwater*. The maximum headwater for the major storm design flow shall be one and one-half (1.5) times the culvert diameter for round culverts or one and one-half (1.5) times the culvert rise dimension for shapes other than round.
4. *Inlet and outlet protection*. For road and driveway culverts larger than fifteen (15) inches, culverts are to be designed with protection at the inlet and outlet areas as provided in Section **410.710** of this criteria. Headwalls or end sections are to be located a sufficient distance from the edge of the shoulder or the back of walk to allow for a maximum slope of 3H:1V to the back of the structure. The type of outlet protection required is as follows:

V<7FPS	7FPS<V<15FPS	V>15FPS
Minimum Riprap protection	Riprap protection or Energy Dissipater	Energy dissipater

5. *Velocity limitations*. The maximum allowable discharge velocity is fifteen (15) feet per second.
6. *Culvert hydraulics*. It is recommended that the procedures outlined in the publication "Hydraulic Design of Highway Culverts" (reference 4) be used for the hydraulic design of culverts. Backwater calculations demonstrating the backwater effects of the culvert may be required.

D. *Design Standards For Bridges.*

1. *Structural design*. All bridges shall be designed to withstand an HS-20 loading in accordance with the design procedures of AASHTO "Standard Specifications for Highway Bridges" (reference 13). The designer shall also check the construction loads and utilize the most severe loading condition.
2. *Design capacity*. Bridges shall be designed to pass the 100-year storm with one (1) foot of freeboard between the water surface and the bridge low chord.
3. *Backwater*. "*Backwater*" is defined as the rise in the water surface due to the constriction created by the bridge approach road fills. The maximum backwater for the 100-storm design flow shall be one (1) foot.
4. *Velocity limitations*. Discharge velocities through bridge openings shall be limited to fifteen (15) feet per second. Abutment and channel scour protection shall be provided at all bridges.
5. *Bridge hydraulics*. All bridge hydraulics shall be evaluated using the procedures presented the publication "Hydraulics of Bridge Waterway" (reference 14). Backwater calculations demonstrating the effects of the bridge and approach fills compared to the existing flood stages shall be submitted for all bridges.

E. *Design Standards For Open Channels.*

1. *General design guidelines.*
   a. *Natural channels*. The hydraulic properties of natural channels vary along the channel reach and can be either controlled to the extent desired or altered to meet the given requirements. Natural channels used as part of the drainage system must be evaluated for the effects of increased peak flow, flow duration and volume of runoff due to urbanization.
   b. *Grass lined channels*. Grass lined channels are the most desirable of the artificial channels. The channel storage, lower velocities and the greenbelt multiple use benefits obtained create significant advantages over other artificial channels. Unless existing development restricts the availability of right of way, channels lined with

grass should be given preference over other artificial types. The minimum slope in a grass-lined channel shall be one percent (1.0%) unless a concrete low flow channel is installed.

c. *Concrete lined channels*. Concrete lined channels are sometimes required where right of way restrictions within existing development prohibit grass-lined channels. The lining must be designed to withstand the various forces and actions, which tend to overtop the bank, deteriorate the lining, erode the soil beneath the lining and erode unlined areas. The minimum slope in a concrete lined channel shall be one-half percent (0.50%).

d. *Rock lined channels*. Rock lined channels are constructed from ordinary riprap or wire enclosed riprap (gabions etc.). The rock lining permits higher design velocity than for grass lined channels. Rock linings will normally be used only for erosion control at culvert/storm sewer outlets, at sharp channel bends, at channel confluences and at locally steepened channel sections.

e. *Other lining types*. The use of fabrics and other synthetic materials for channel linings has increased over the past several years. Proposed improvements of this type will be reviewed on an individual basis as for applicability and performance.

2. *Hydraulics*. An open channel is a conduit in which water flows with a free surface. The calculations for uniform and gradually varied flow are relatively straightforward and are based upon similar assumptions (e.g. parallel streamlines). The basic equations and computational procedures are presented in this Section.

a. *Uniform flow*. Open channel flow is said to be uniform if the depth of flow is the same at every section of the channel. For a given channel geometry, roughness, discharge and slope, there is only one possible depth, the normal depth. For a channel of uniform cross section the water surface will be parallel to the channel bottom for uniform flow.

b. The computation of normal depth for uniform flow shall be based upon Manning's formula as follows:

	$Q = (1.49/n)AR^{2/3}S^{1/2}$
Where,	Q = Discharge in cubic feet per second (cfs)
	n = Roughness coefficient (Table I)
	A = Cross sectional flow area in square feet
	R = Hydraulic radius, A/P, in feet
	P = Wetted perimeter in feet
	S = Slope of the energy grade line (EGL) in feet/foot

For channels with a uniform cross section the EGL slope and the bottom slope are assumed to be the same.

c. *Critical flow*. The design of earth or rock channels in the critical flow regime (Froude numbers from 0.9 to 1.2) is not permitted. The Froude number is defined as follows:

	$F = V/(gD)^{0.5}$
Where,	F = Froude number
	V = Velocity in feet per second (fps)
	g = Acceleration of gravity, 32.2 ft/sec^2
	D = Hydraulic depth in feet = A/T
	A = Cross sectional flow area in square feet
	T = Top width of flow area in feet

The Froude number shall be calculated for the design of all open channels.

d. *Gradually varied flow*.

(1). The most common occurrence of gradually varied flow in storm drainage is the backwater created by culverts, storm sewer inlets or channel constrictions. For these conditions the flow depth will be greater than normal depth in the channel and the water surface profile must be computed using backwater techniques.

(2). Backwater computations can be made using the methods presented in Chow (reference 1). Many computer programs are available for computation of backwater curves. The most widely used program is HEC-2, Water Surface Profiles, developed by the U.S. Army Corps of Engineers (reference 2) and is the program recommended for backwater profile computations. Another program by the Federal Highway Administration is WSPRO and is acceptable for use in backwater computations.

3. *Design standards*.

a. *Flow velocity*. Maximum flow velocities shall not exceed the following:

Channel Type	**Max. Velocity**
Grass lined*	5 fps
Concrete	15 fps
Rock Lined	10 fps
*Refer to item f. below	

b. *Maximum depth*. The maximum allowable channel depth of flow is three (3) feet for the design flow.

c. *Freeboard requirements*.

(1). "*Freeboard*" is defined as the vertical distance between the computed water surface elevation for the design flow and the minimum top of bank elevation for a given cross section.

(2). For all channels one (1) foot minimum of freeboard is required.

(3). Freeboard shall be in addition to super elevation.

d. *Curvature*. The minimum channel centerline radius shall be three (3) times the top width of the design flow.

e. *Super elevation*. Super elevation shall be calculated for all curves. An approximation of the super elevation h may be calculated from the following formula:

	$H = V^2T/(gr)$
Where,	h = Super elevation in feet
	V = Velocity in fps
	T = Top width of flow area in feet
	G = Acceleration of gravity, 32.2 ft/sec^2
	r = radius of curvature in feet

~~Freeboard shall be measured above the super-elevated water surface.~~

~~f. *Grass channels*.~~

~~(1). Side slopes shall be three (3) (horizontal) to one (1) (vertical) or flatter. Steeper slopes may be used subject to additional erosion protection and approval from the City.~~

~~(2). For design discharges greater than fifty (50) cfs, grade checks shall be provided at a maximum of two hundred (200) feet horizontal spacing.~~

~~(3). Channel drops shall be provided as necessary to control the design velocities within acceptable limits.~~

~~(4). Vertical drops may be used up to three (3) feet in height. Drops greater than three (3) feet shall be baffled chutes or similar structures.~~

~~(5). The variation of Manning's n with the retardance and the product of mean velocity and hydraulic radius as shown in Figure 7.23 in reference 17 shall be used in the capacity calculations. Retardance curve C shall be used to determine the channel capacity and retardance curve D shall be used to determine the velocity.~~

~~4. *Easements*.~~

~~a. Easements shall be provided for all open channels constructed in the City of Republic that are not located within public rights-of-way. The minimum easement width for open channels is the flow width inundated by a 100-year event plus fifteen (15) feet.~~

~~b. All easements required for construction, which are not included on the final plat shall be recorded and filed with the City prior to approval of the construction drawings.~~

410.690 Stormwater Detention Design

A. *Purpose*.

~~1. Detention facilities are used to reduce storm water runoff rates by storing excess runoff.~~

1. ~~2~~. The usual function of a detention facilities is to provide sufficient storage such that peak runoff rates are not increased when development occurs. **A secondary function may be to settle pollutants such as sediment from the stormwater before discharge to the natural drainageway.**

2. All Detention/Retention basins shall follow design guidelines outlined in the latest version of the Stormwater Management and Design Criteria Manual.

B. ~~*Policy*. The primary goal of the City of Republic stormwater management program is the prevention of flood damage to residential, commercial and public property. In adopting this policy, City of Republic recognizes that:~~

~~1. There are many areas in the City where residential flooding occurs because of inadequately sized drainage ways.~~

~~2. Flooding depths and frequency will increase as development occurs upstream of these areas.~~

~~3. Detention basins are the only effective "on-site" means which can be used to control peak runoff storm water rates as areas develop.~~

~~4. The City of Republic further recognizes that:~~

~~a. The best means to assure effective performance of a detention basin utilize is perform reservoir routing calculations using hydrographs.~~

~~b. Such methods have not been in widespread use in this area, but rather a method known as the "Simplified Volume Formula" has been the basis of City detention policy.~~

~~c. Use of the Simplified Volume Formula frequently does not result in adequately sized detention facilities.~~

~~d. The inaccuracy of the Rational Method upon which the Simplified Volume Formula is based increases as the area under consideration increases.~~

~~e. Even though the Simplified Volume Formula has severe limitations, requirement of detailed analytical methods may not be justified in all cases.~~

~~f. Detention basins designed using the Simplified Volume Formula do provide a minimal amount of flooding protection and potential water quality benefits by functioning as sediment basins.~~

~~5. Therefore, in order to provide a reasonable level of flood protection to homes and businesses, while maintaining a climate favorable for development and economic growth, City of Republic has established the following policy for design of detention facilities.~~

~~C. *Methods of Analysis*. The method of analysis to be required for the design of detention facilities will be determined as follows:~~

~~1. Detailed analysis will be required in the following cases:~~

~~a. In areas where residences or other structures located downstream of a development can be shown to have an imminent flooding hazard a detailed analysis using hydrographs and reservoir routing techniques will be required.~~

~~b. Residences or other structures will be defined as having an imminent flooding hazard when the lowest point, at which surface runoff may gain entry, is located at or below the estimated flooding level which would result from a storm with an annual probability of one percent (1%) or greater under conditions existing in the basin prior to development of the applicant's property (i.e., affected by the "100-year" storm).~~

~~c. Consideration of downstream flooding problems will be limited to the area which may reasonably be expected to be significantly affected by runoff from the applicant's property.~~

~~d. Detailed analysis will be required for all detention facilities where the peak runoff rate from the area upstream of the detention facility (off-site and on-site) exceeds fifty (50) cfs (cubic feet per second) for a storm with an annual probability of one percent (1%) (the "100-year" storm) under fully developed conditions. (Note: This would be the rate of flow from approximately twelve (12) acres for residential areas or five (5) acres for fully paved commercial areas.)~~

~~2. Simplified analysis will be permitted in the following cases: For areas where there are no imminent downstream flooding problems and where the peak runoff rate from the drainage area (off-site and on-site) upstream of the detention facility does not exceed fifty (50) cfs for the one percent (1%) annual probability ("100-year") storm under fully developed conditions, the Simplified Volume Formula may be used.~~

D. *Alternatives to detention*.

1. *Residential subdivisions*. Unless otherwise approved by the City, through review of stormwater calculations and criteria referenced herein, detention shall be required in all major residential subdivisions. Upon request by a developer, the City may consider alternatives to detention in cases where it can be proven that the absence of detention will not adversely affect downstream property owners. Each request will be evaluated

on a case-by-case basis and an alternative to detention may be established for the purposes of regional improvements within the watershed or abroad in the City.

2. *Justified exceptions*. The City may consider, upon request, a waiver of detention for sites, in which the alteration of the site is inconsequential and will not substantially increase the runoff. A justified exception will be granted for sites based on the following criteria.
    a. Existing sites in which the addition of impervious surface will not increase more than five thousand (5,000) square feet.
    b. Sites in which existing gravel, chat or stone parking lots or driveways are paved with asphalt cement or concrete surfaces shall be considered 50% of the sf of an increase in impervious surface. This shall not apply to parking areas or circulation routes in which vegetation has consumed the site and altered the ability to shed or absorb runoff. The BUILDS Department shall exercise strict discretion with respect to approving exceptions based on these criteria.
    c. Sites in which a change in use has occurred, that does not increase the impervious area of the site.
    d. Subdivisions meeting the definition of a minor subdivision or the development of individual single-family-residential homes on individual lots in existing subdivisions.

E. *Procedure*. A request for approval of an alternative to detention must begin with the applicant providing the BUILDS Department with stormwater calculations for the increased runoff from the development. In addition to providing calculations, the applicant must submit a request for alternative design based on the criteria established above. The BUILDS Department will review the and/or other departments impacted by the request. If the City determines the request is justified the City will notify the applicant or his representative of the approval and the necessary improvements required in lieu of installing detention.

F. *Innovation in design*.
    1. It is the desire of the City that detention facilities be designed and constructed in a manner to enhance aesthetic and environmental qualities of the City as much as possible.
    2. The City of Republic therefore encourages designs, which utilize and enhance natural settings and minimize disturbance and destruction of wooded areas, natural channels and wetlands.

G. *Interpretation*.
    1. Interpretations of the detention policy will be made by the BUILDS Administrator or their designee in writing.

3. ~~*Alternatives to detention*~~.

~~a. *Fee in lieu of detention*. In cases where channelization or other improvements can be shown to be more effective than detention in reducing the flooding hazard to downstream properties and where no adverse effects to downstream properties will result from construction of such improvements, the City may enter into an agreement with the applicant to accept compensation in lieu of constructing on-site detention facilities.~~

~~b. The City has established the following formula for the fee in lieu of detention: Fee = K * (Ia) acres of impervious surface added~~

Where Ia is the increase in impervious area (roofs, pavement, driveways, patios, etc.) in acres and K shall be determined as follows:

K shall equal ten thousand dollars ($10,000.00) up to and including forty-three thousand five hundred sixty (43,560) square feet (one (1) acre) of impervious area added plus five thousand dollars ($5,000.00) for impervious area added in excess of forty-three thousand five hundred sixty (43,560) square feet (one (1) acre). K is a factor determined by the City. This factor is based upon the net financial gain, which the developer would realize if the detention facility is not built. This amount will generally be equal to the construction cost of the detention facility plus revenue from sale of additional lots or increased value of lots, less the cost of developing the lots, including utilities and streets, financing costs, sales costs and reasonable profit. The City shall evaluate this formula annually and make the appropriate adjustments.

c. *Criteria for approving an alternative to detention*. The City will evaluate each request for an alternative design or fee in lieu of detention based on the following criteria. The City of Republic reserves the right to set precedent with each case considered depending upon the unique circumstances surrounding each request.
   (1). Size of site in relation to the stormwater generated.*
   (2). Size of the site in relation to the drainage area.*
   (3). Impact on properties downstream of site.*
   (4). Areas of concern as identified by the City of Republic's Stormwater Master Plan.
   (5). Location of the site with respect to floodplains, streams or other large watercourses.
   (6). Location of the site with respect to environmentally sensitive areas.
   (7). Approval of previous requests.
   * Downstream impacts shall generally be considered insignificant when the added upstream impervious area is less than ten percent (10%) of the total contributing watershed area. Exceptions to this rule include development where downstream areas are known to have an imminent flooding hazard as defined in Section **410.690**.

d. *Residential subdivisions*. Unless otherwise approved by the City, through review of stormwater calculations and criteria referenced herein, detention shall be required in all major residential subdivisions and the fee in lieu of detention established in Section 410.690(C-3(a)) shall apply. Upon request by a developer, the City may consider alternatives to the fee in lieu of detention in cases where it can be proven that the absence of detention will not adversely affect downstream property owners. Each request will be evaluated on a case-by-case basis and a fee in lieu detention may be established for the purposes of regional improvements within the watershed or abroad in the City.

e. *Justified exceptions*. The City may consider, upon request, a waiver of detention and the fee in lieu for sites, in which the alteration of the site is inconsequential and will not substantially increase the runoff. A justified exception will be granted for sites based on the following criteria.
   (1). Existing sites in which the addition of impervious surface will not increase more that five thousand (5,000) square feet.

~~(2). Sites in which existing gravel, chat or stone parking lots or driveways are paved with asphalt cement or concrete surfaces. This shall not apply to parking areas or circulation routes in which vegetation has consumed the site and altered the ability to shed or absorb runoff. The City shall exercise strict discretion with respect to approving exceptions based on these criteria.~~

~~(3). Sites in which a change in use has occurred, that does not increase the impervious area of the site.~~

~~(4). Subdivisions meeting the definition of a minor subdivision or the development of individual single-family residential homes on individual lots in existing subdivisions.~~

~~f. *Procedure*. A request for approval of an alternative to detention must begin with the applicant providing the City with stormwater calculations for the increased runoff from the development. In addition to providing calculations, the applicant must submit a request for alternative design based on the criteria established above. The City Planner will coordinate review of the request with the Public Works Department, City Engineer or other departments impacted by the request. If the City determines the request is justified the City Planner will notify the applicant or his representative of the approval and the fee required in lieu of installing detention.~~

~~g. *Minimum fee in lieu of detention established*. The City of Republic has established a minimum fee of one thousand one hundred fifty dollars ($1,150.00) in lieu providing detention to be paid upon approval by the City.~~

~~4. *Innovation in design*.~~

~~a. It is the desire of the City that detention facilities be designed and constructed in a manner to enhance aesthetic and environmental quality of the City as much as possible.~~

~~b. The City of Republic therefore encourages designs, which utilize and enhance natural settings and minimize disturbance and destruction of wooded areas, natural channels and wetlands.~~

~~5. *Interpretation*.~~

~~a. Interpretations of the detention policy will be made by the City Engineer or City Planner in writing.~~

~~b. Appeals of the decisions of the City Engineer or City Planner may be made, in writing, to the Community Development Director.~~

H. ~~*D.*~~ *Design Criteria*.

1. *General*.
   a. Detention facilities shall discharge into a drainage easement or public right-of-way.
   b. One (1) foot of freeboard shall be provided between the maximum water surface elevation (maximum stage for a one percent (1%) annual probability event) and the minimum top of berm or wall elevation.
   c. Embankment slopes steeper than three (3) horizontal to one (1) vertical (3H:1V) are not permitted.

d. In certain instances, such as when the existing development conditions runoff from a watershed would exceed the capacity of the existing downstream facilities, retention basins (i.e., no outlet or with a release rate at the capacity of the downstream facilities) for the storm runoff may be required by the City.
e. Dry detention basins shall maintain a minimum bottom slope of two (2) feet per hundred (100) feet (two percent (2%)).
f. Trickle channels shall have a minimum slope of one-half (0.5) foot per hundred (100) feet (one-half percent (0.5%)).
g. The maximum allowable depth of ponding for parking lot detention is twelve (12) inches.
h. Parking lot detention may not inundate more than ten percent (10%) of the total parking area.
i. All parking lot detention areas shall have a minimum of two (2) signs posted identifying the detention pond area. The signs shall have a minimum area of one and one-half (1.5) square feet and contain the following message:

WARNING: This area is a storm-water detention pond and is subject to periodic flooding to a depth of twelve (12) inches.

j. The sign shall be reflective and have a minimum height of forty-eight (48) inches from the bottom of the sign to the parking space finished grade. Any suitable materials and geometry of the sign are permissible, subject to approval by the City.

2. *Detailed analysis*.

~~a.~~ **Analysis shall be conducted as outlined in Stormwater Management and Design Criteria Manual.** ~~Detailed analysis shall be performed using hydrograph methodologies and reservoir routing techniques.~~

~~b. The most common techniques are those developed by the Corps of Engineers and the Soil Conservation Service. These methods are preferred, however other proven techniques will be accepted.~~

~~c. Detention basins designed by detailed methods shall be designed on the basis of multiple storm recurrence frequencies to ensure that they function properly for both frequent storms and large infrequent storms.~~

~~d. A minimum of three (3) recurrence frequencies, the fifty percent (50%), ten percent (10%) and one percent (1%) annual probability storms (the "2-year, 10-year and 100-year" storms) must be considered.~~

~~e. The runoff model must include the entire drainage basin upstream of the proposed detention pond. The model shall be prepared in sufficient detail to ensure that peak runoff rates are reasonably accurate.~~

~~f. The runoff model shall be developed for the following cases:~~

~~(1). Case 1: Existing conditions in the drainage basin prior to development of the applicant's property.~~

~~(2). Case 2: Existing conditions in the drainage basin with developed conditions on the applicant's property.~~

~~(3). Case 3: Fully developed conditions in the entire drainage basin.~~

~~(4). Cases 1 and 2 are utilized to determine the required detention volume and the type of outlet structure to be provided and shall be analyzed for the three (3) storm recurrence frequencies required above.~~

(5). The detention facility shall be designed such that peak outflow rates from the facility for Case 2 are no greater than the rates determined in Case 1 for each of the three (3) storm recurrence frequencies required.

(6). The storage volume provided shall not be less than the difference in total runoff volume between Case 1 and Case 2.

(7). Case 3 is used determine the size of the overflow spillway. Case 3 need only be analyzed for the one percent (1%) annual probability ("100-year").

(8). The overflow spillway will, in most cases, be combined with the outlet structure.

3. *Submittals*. The following information must be submitted for detention ponds designed by detailed methods:

a. Information regarding analytical methods and software to be used, including:

(1). Name of software to be used.

(2). Type and distribution of precipitation input.

(3). Method for determining precipitation losses.

(4). Type of synthetic hydrograph.

(5). Method for routing hydrographs.

(6). Method used for reservoir routing.

b. Map(s) showing sub-basin delineation, topography, presumed flow routes and pertinent points of interest; soil types; existing basin development conditions used in the model; fully developed conditions used in the model.

c. Routing diagram for the runoff model.

d. A summary of sub-basin characteristics used for program input.

e. Stage-area or stage-storage characteristics for the basin in tabular or graphic form.

f. Stage-discharge characteristics for the outlet structure and overflow spillway in tabular or graphic form; hydraulic data for weirs, orifices and other components of the control structure.

g. A printout of the input data file.

h. A summary printout of program output, including plots of hydrographs. (These are intended to be the printer plots generated by the software.)

4. *Simplified analysis*.

a. *Method of evaluation*. Differential runoff rates shall be evaluated by equation:

	R = (Cd X I100) - (Cu X I100)
Where,	R = Differential Runoff Factor
	Cd = Runoff Coefficient for developed conditions
	Cu = Runoff Coefficient for developed conditions
	I100 = Intensity for 100-year storm

b. "C" values shall be determined from the following table:

SUGGESTED RUNOFF COEFFICIENTS	
"C" Value	**Surface Conditions**
.10—.15	Tall grass, brush
.15—.20	Parks, golf courses, farms and one (1) acre single-family residences
.35	Single-family residences on lots of not less than 15,000 sq. ft.
.45	Single-family residences on lots of not less than 10,000 sq. ft.
.47	Single-family residences on lots of not less than 7,500 sq. ft.
.51	Single-family residences on lots of not less than 6,000 sq. ft.
.90	Gravel surfaces.
.95	Asphalt and concrete surfaces.
1.00	Buildings and other structures.

c. *Volume of Detention*. Volume of detention shall be determined according to the "Simplified Volume Formula", as follows:

V = R X A X tc (min.) x 60 (sec./min.)
V = Total volume of detention (cu. ft.)
R = Differential Runoff Factor
A = Area of project in acres
tc = Time of concentration (5 minutes, minimum)

d. *Time of Concentration*.

(1). *SCS Method*. The preferred method for determining time of concentration shall be the method set forth in Chapter 3 of the Soil Conservation Service Technical Release No. 55, "Urban Hydrology for Small Watersheds", 2nd Edition, 1986.

(2). *Other Methods*.

1. Time of concentration may also be calculated by other accepted methods providing reasonable results.
2. The time of concentration used in the formula shall be determined based upon existing conditions.

e. *Rainfall Intensity*. Rainfall intensity shall be determined from Drawing 20.

f. *Required Volume*. The required volume of detention shall be determined from the following Table:

Calculated Volume	Required Volume
1 cu. ft. thru 500 cu. ft.	500 cu. ft.
501 cu. ft. through 5,999 cu. ft.	Round up to nearest 500 cu. ft.
5,000 cu. ft. through 9,999 cu. ft.	Round up to nearest 1,000 cu. ft.
10,000 cu. ft. thru 49,999 cu. ft.	Round up to nearest 5,000 cu. ft.
Above 50,000 cu. ft.	Round up to nearest 10,000 cu. ft.

5. *Control structures*.
   a. Detention facilities designed by the simplified analysis shall be provided with obvious and effective outlet control structures. These outlet structures may include v-notch weirs or rectangular weirs, as well as pipe. Plan view and sections of the structure with adequate detail shall be included in plans.
   b. The design discharge (Q) for the low flow outlet shall not exceed the existing runoff for the one year storm. The maximum discharge shall be designed to take place under total anticipated design head conditions. The design head storage volume is not to be considered a part of the volume of detention required.
   c. Sizing of a low flow pipe shall be by inlet control.
   d. Low flow pipes shall not be smaller than four (4) inches in diameter to minimize maintenance and operating problems, except in parking lot and roof detention where minimum size and configuration of opening shall be designed specifically for each condition.
   e. Overflow spillways will be required on all detention facilities, which have storage volumes of one thousand (1,000) or more cubic feet.
   f. The overflow opening or spillway shall be designed so that the combination flow of the low flow outlet and the flow over the spillway will not exceed the total peak runoff for the improved area. The total peak runoff is to be determined from a 25 year frequency rain for drainage areas less than one (1.0) square mile and from a 100 year frequency rain for drainage areas one (1.0) square miles or greater.

410.700 Sinkholes And Karst Features

A. *General.* **Refer to Section 9 of Stormwater Management and Design Criteria Manual for design criteria involving sinkholes and karst features on a site.**

1. The City of Republic is located on the Springfield Plateau of the Ozarks physiographic region. This area is underlain by Mississippian Age limestone, which is highly susceptible to solutional weathering. As a result, sinkholes, springs and caves are common.

2. ~~In many areas of the City special consideration must be given to flood hazards and potential for groundwater contamination due to the presence of sinkholes, caves, losing streams, springs and other features associated with karst geology.~~
3. ~~The requirements set forth herein, are intended to provide specific criteria for design and construction for any site upon which sinkholes or other karst features are located.~~
4. ~~Interpretations of these requirements shall be made and appeals may be made according to the procedures set forth in these Design Criteria.~~

B. *Policy.* In keeping with the intent of the City Development Regulations the following policy is set forth for development in areas containing sinkholes:
   1. Development in sinkhole areas will be based upon the following axioms:
      a. Avoidance.
      b. Minimization.
      c. Mitigation.
   2. Construction in sinkholes shall be avoided. Exceptions will be made only in situations where it can be conclusively demonstrated that there are no practical alternatives to such construction.
   3. These situations are mostly likely to arise where:
      a. An underground cavity has caused a collapsed sinkhole to form, after subdivision approval or building construction.
      b. A sinkhole has been altered or filled either unknowingly or prior to passage of these regulations.
      c. Maintenance and operation is required for existing roads and utilities.
      d. Location of existing streets or utilities would render access or utility service to a property impractical or cost prohibitive.
   4. In these types of cases, measures, which will have minimal impact on the sinkhole or receiving water, may be proposed. Plans for minimal alteration can be approved provided it is conclusively demonstrated that the proposed plan is the minimum practical alternative.
   5. In these cases potential impacts of construction on the sinkhole and receiving waters must be studied and assessed and recommendations made for mitigation of potential impacts upon surface flooding and groundwater quality before the plans can be approved. The degree and sophistication of study required will increase in proportion to the potential impacts. **A remediation plan will need to be submitted for review by the City. The remediation plan will need to be stamped by a Qualified Professional Geotechnical Engineer licensed in the state of Missouri.**

C. Definitions. As used in this Section, the following terms shall have these prescribed meanings:

ALTERED SINKHOLE
A sinkhole that has been filled, excavated or otherwise disturbed.

COLLAPSED SINKHOLE
A subsidence or cave-in of the ground surface caused when soil overburden can no longer be supported by underlying strata due to the presence of subsurface solution cavities.

HEAVY EQUIPMENT
Motorized equipment having a gross weight of more than six (6) tons.

LIGHT EQUIPMENT

Motorized equipment weighing six (6) tons or less.

QUALIFIED GEOLOGIST
A person who has met or exceeded the minimum geological educational requirement and who can interpret and apply geologic data principles and concepts and who can conduct field or laboratory geologic investigations (per RSMo.) and who by reason of experience and education, has an understanding of local karst geology.

QUALIFIED PROFESSIONAL GEOTECHNICAL ENGINEER
A person registered to practice engineering according to the laws of the State of Missouri and who by reason of technical education and experience has a background in the fundamentals of storm drainage and karst **geology.**

SINKHOLE
Any depression in the surface of the ground, with or without collapse of adjacent rock that provides a means through which surface water can come into contact with subsurface water.

Sinkhole depressions may be gradual or abrupt; they may or may not have a well defined eye. While most sinkholes can be defined as the area within a "closed contour", some sinkholes such as those located on the sides of hills may not.

All sinkholes provide discreet points of recharge to groundwater.

SINKHOLE CLUSTER AREA
An area containing two (2) or more sinkholes located in close proximity, generally interconnected by groundwater conduits.

SINKHOLE EYE
Generally, a visible opening, cavity or cave in the bottom of a sinkhole, sometimes referred to as a swallow hole.

SINKHOLE FLOODING AREA
The area inundated by runoff from a storm with an annual exceedance probability of one percent (1%) and a duration of twenty-four (24) hours.

SINKHOLE RIM
The perimeter of the sinkhole depression. The sinkhole rim will generally vary in elevation.

SINKHOLE WATERSHED
The ground surface area that provides drainage to the sinkhole. This area extends beyond the sinkhole depression and generally crosses property boundaries.

TERMINAL SINKHOLE
The lowest sinkhole in a sinkhole cluster to which any surface water overflowing from other sinkholes in the cluster will flow.

UNALTERED SINKHOLE

A sinkhole that has never been altered or disturbed.

D. *Permits Required*.
   1. *Grading permit*. A grading permit must be obtained prior to any alteration of sinkholes associated with new subdivision construction in accordance with the City's Subdivision Regulations. Procedures and requirements for grading permits are set forth in Section **410.710**.
   2. *Other permits*. Other permits from State or Federal agencies may be required, as outlined in Section **410.650** of these Design Criteria, depending upon the size and nature of the proposed activity.

E. *General Plan Requirements*. General requirements for grading and drainage plans are set forth in **the latest version of Stormwater Management and Design Criteria Manual** ~~Sections **410.670, 410.680**~~ and **Section** **410.710** of these Design Criteria.

F. ~~*Sinkhole Evaluation*. An evaluation including the following information shall be made for all sites upon which sinkholes are fully or partially located:~~
   ~~1. The site plan for the proposed development must show the following items with respect to location of proposed construction, proposed or existing property lines and existing structures:~~
      ~~a. Sinkholes.~~
         ~~(1). Location and limits of the area of the sinkhole depression as determined by field surveys or other reliable sources as may be approved. Location of sinkholes based solely upon USGS 7 1/2 Minute Series Quadrangle Maps will not be considered sufficient unless field verified.~~
         ~~(2). Location and elevation of the sinkhole eye where visible or known.~~
         ~~(3). Topographic contours at maximum intervals of two (2) feet and spot elevations sufficient to determine the low point on the sinkhole rim and the profile of the potential overflow area.~~
         ~~(4). Minimum entry elevations of any existing structures located within the sinkhole rim.~~
         ~~(5). Elevation of any roadway located within or adjacent to the sinkhole.~~
      ~~b. *Water supply sources*.~~
         ~~(1). The approximate location of public or private water supply sources such as springs or wells, as determined from information available from the City and Missouri Department of Natural Resources.~~
         ~~(2). Boundaries of any known recharge areas to wells or springs as determined from information available from the City and Missouri Department of Natural Resources.~~
      ~~c. *Other geologic features*. Location of caves, springs, faults and fracture trends, geologic mapping units based upon information from the City or other reliable sources.~~
      ~~d. Flooding limits for the sinkholes determined as set below.~~
   ~~2. A drainage area map showing the sinkhole watershed area. Where the site is located in a sinkhole cluster area, this map shall be extended to include the watershed area any sinkholes located downstream of the site which may receive overflow drainage from the site.~~
   ~~3. Assessment of potential impacts on groundwater quality and proposed water quality management measures as set forth below.~~

~~G. *Flooding Considerations*~~

1. *Minimum flooding analysis.*
   a. Maximum estimated flooding elevations shall be determined for each sinkhole for both pre-development and post development conditions, assuming no subsurface outflow from the sinkhole.
   b. Where the estimated volume of runoff exceeds the volume of the sinkhole depression, the depth, spread and path of overflow shall be estimated and shown on the map.
   c. The overflow volume shall be included determining the maximum estimated flooding elevations in the next downstream sinkhole. This analysis shall continue downstream until the lowest sinkhole of the sinkhole cluster is reached or overflow reaches a surface watercourse.
   d. The volume of runoff considered shall be that which results from a rainstorm with an annual probability of one percent (1%) (100-year storm) and a duration of twenty-four (24) hours (eight and two-tenths (8.2) inches for Republic).
   e. The runoff volume shall be determined by the method set forth in Chapter 2 of the SCS TR-55 Manual (Reference).
   f. No further flooding analysis will be required provided that:
      (1). The post-development flooding area of any sinkhole which receives drainage receiving drainage from the site is located entirely on the site.
      (2). A drainage easement covering the post-development flooding area is provided for any off-site sinkhole or portion of a sinkhole which receives increased peak rates of runoff from the site. If the receiving sinkhole is not contiguous to the site, an easement must also be provided for the waterway that connects the site to the sinkhole.
      (3). The minimum entry elevation of any existing structure is at least one (1) foot higher than the estimated flooding elevation from the one percent (1%) annual probability 24-hour storm.
      (4). The flooding depth on any existing public road does not exceed the maximum depths set forth in Section **410.680**.
2. *Detailed flooding analysis.*
   a. In cases where the conditions set forth above cannot be met, a detailed flooding analysis will be required if any increase in runoff volume is proposed. For detailed flooding analysis a runoff model must be made for the sinkhole watershed and reservoir routing analysis performed using hydrograph techniques as set forth in Section **410.690**.
   b. The following alternative methods may be used singly or in combination to keep flooding levels at predevelopment levels:
      (1). *Diversion of excess runoff to surface watercourses.* Where feasible, increased post-development runoff may by diverted to a surface watercourse, provided that:
         (A). Any increase in peak runoff rate in the receiving watercourse does not create or worsen existing flooding problems downstream; and
         (B). The diverted stormwater remains in the same surface watershed.
         (C). Storm sewers, open channels and other appurtenances provided for diversions shall be designed in accordance with applicable sections of these Design Criteria.

(D). The effect of diverted water on downstream watercourses and developments and requirements for additional detention facilities prior to release of runoff to the surface watercourse shall be determined as set forth in Section **410.690**, Detention Facilities.

(E). Effects of the diversion shall be shown by reservoir routing analysis. Routing of excess runoff shall be considered satisfactory when it can be demonstrated that the post-development flooding elevation in the sinkhole does not exceed the pre-development flooding elevation within reasonable tolerance (generally one-tenth (0.1) foot).

c. *Storage of excess runoff within the sinkhole watershed*.

(1). Where feasible, detention facilities may be constructed within the sinkhole watershed or in perimeter areas of the sinkhole. These detention facilities must be located outside the sinkhole flooding area determined for post-development conditions.

(2). The flooding considerations set forth in this Section will be met if it can be demonstrated that:

(A). Inflow rates to the sinkhole can be reduced to a degree that, in conjunction with the observed outflow rate, the post-development flooding elevation in the sinkhole does not exceed the pre-development flooding elevation within reasonable tolerance (generally one-tenth (0.1) foot).

(B). Sediment and erosion control and water quality considerations as set forth elsewhere in this Section can be satisfied.

H. *Water Quality Considerations*.

1. Sinkholes provide direct recharge routes to groundwater. As a result water quality in wells, caves and springs may be affected by discharge of runoff from developed areas.
2. The Sinkhole Evaluation must consider potential impacts of the proposed construction on receiving groundwater and propose measures to mitigate such impacts.
3. Four (4) primary factors must be considered:
    a. Receiving groundwater use.
    b. Relative groundwater contamination hazard associated with the proposed development.
    c. Ability to capture pollutants.
    d. Management measures to be provided to reduce pollutant levels.
4. *Receiving groundwater use*.
    a. The Sinkhole Evaluation Report shall identify whether the site lies within a critical area based upon information available from the City.
    b. Where disagreements may arise over whether a site is located within a particular recharge area dye tracing may be required for confirmation of the destination of water discharges through a sinkhole.
    c. *Critical areas*. The following areas are classified as critically sensitive to contamination from urban runoff:
        (1). Recharge areas of domestic water supply wells.
        (2). Recharge areas of springs used for public or private water supply.

(3). Recharge areas of caves providing habitat to rare or endangered species such as the Ozark cave fish.

d. *Sensitive areas*. All other sinkhole areas will be classified as sensitive to contamination from urban runoff.

5. *Groundwater contamination hazard*. The relative potential for groundwater contamination will be classified as low, moderate or high depending upon the type of land use, development density and amount of directly connected impervious area. The Sinkhole Evaluation shall identify whether the proposed development poses a low, moderate or high hazard to groundwater uses, as defined below:

a. *Low hazard*. The following land uses are classified as posing a relatively low hazard to groundwater contamination:

(1). Wooded areas and lawns.

(2). Parks and recreation areas.

(3). Residential developments on sewer, provided directly connected impervious areas discharging to the sinkhole is less than one (1) acre.

(4). Low density commercial and office developments provided directly connected impervious areas discharging to the sinkhole is less than one (1) acre.

(5). Discharge from graded areas less than one (1) acre having required sediment controls per Section **410.710**.

b. *Moderate hazard*.

(1). Concentrated discharge from streets and parking lots and roofs and other directly connected impervious areas having an area greater than one (1) acre and less than five (5) acres.

(2). Multi-family residential developments and higher intensity office developments provided the directly connected impervious areas discharging to the sinkhole is less than five (5) acres.

(3). Discharge from graded areas greater than one (1) acre and less than five (5) acres having required sediment controls per Section **410.710**.

c. *High hazard*.

(1). Collector and arterial streets and highways used for commercial transport of toxic materials.

(2). Railroads.

(3). Concentrated discharge from streets and parking lots and roofs and other directly connected impervious areas having an area greater than five (5) acres.

(4). Commercial, industrial and manufacturing areas.

(5). Individual wastewater treatment systems.

(6). Commercial feedlots or poultry operations.

(7). Discharge from graded areas greater than five (5) acres having required sediment controls per Section **410.710**.

6. *Capturing and filtering pollutants*.

a. The majority of sinkholes drain a limited watershed area. For sinkholes where the surrounding drainage area is small enough that the area draining to the sinkhole flows predominantly as "sheet flow", potential impacts on water quality can be addressed by erecting silt control barriers around the sinkhole during construction and providing a vegetative buffer area around the sinkhole to filter out potential contaminants.

b. When the volume of runoff into the sinkhole increases to the point where flow becomes concentrated, the degree of effort required to capture and filter out contaminants increases significantly.

c. Concentrated inflow occurs naturally when the sinkhole watershed area reaches a sufficient size for watercourses leading into the sinkhole to form. Concentrated surface flows result as urbanization occurs due to construction of roads, storm sewers, drainage channels. Subsurface flows can become concentrated through utility trenches.

d. The Sinkhole Evaluation shall include maps showing any existing watercourse which flows into the sinkhole and location of any proposed concentrated storm water discharges into the sinkhole.

7. *Water quality management measures*.

a. *Sediment and erosion control*.

(1). *Non-concentrated flow (sheet flow)*. In critical areas, existing ground cover shall not be removed within twenty-five (25) feet of the sinkhole rim and a silt barrier shall be provided around the outer perimeter of the buffer area.

(2). *Concentrated flow*. A sediment basin will be required at each point where concentrated flows are discharged into the sinkhole. Sediment basins shall be designed according to the procedures set forth in Section **410.710**.

b. *Minimizing directly connected impervious area*.

(1). The groundwater contamination hazard category for impervious areas may be reduced by reducing the amount of Directly Connected Impervious Area. This is the area of roofs, drives, streets, parking lots, etc. which are connected via paved gutters, channels or storm sewers.

(2). Directly Connected Impervious Areas can be reduced by providing properly sized grass swales, vegetative filter strips or other Best Management Practices to separate paved areas.

c. *Diversion of runoff*.

(1). Concentrated discharges to sinkholes can be reduced to manageable levels or avoided by diverting runoff from impervious areas away from sinkholes where possible.

(2). Diversions shall be done in a manner that does not increase flooding hazards on downstream properties and, generally, shall not be directed out of the surface watershed in which the sinkhole is located.

d. *Filtration areas*.

(1). For areas having a low or moderate groundwater contamination hazard and where flow into the sinkhole occurs as sheet flow, water quality requirements can be satisfied by maintaining a permanent vegetative buffer area with a minimum width of thirty (30) feet around the sinkhole.

(2). Use of pesticides and fertilizers will not be permitted within the buffer area. Animal wastes will not be permitted to accumulate in the buffer area.

e. *Grassed swales and channels*.

(1). For areas having a low groundwater contamination hazard concentrated flows from directly connected impervious areas of less than one (1) acre may be discharged into the sinkhole through grassed swales and channels.

~~(2). Swales and channels shall be designed for non-erosive velocities and appropriate temporary erosion control measures such as sodding or erosion control blankets provided.~~

~~f. *Storage and infiltration.*~~

~~(1). Storage and infiltration will be required in the following cases:~~

~~(A). All areas having a high groundwater contamination hazard.~~

~~(B). Areas having a moderate groundwater contamination hazard where concentrated inflow occurs.~~

~~(2). Storage and infiltration basins shall be designed to capture the runoff from storms up to one (1) inch and release runoff over a minimum period of twenty four (24) hours and maximum period of forty eight (48) hours.~~

~~(3). Standards outlet structures for sedimentation and infiltration basins are shown in the standard drawings.~~

I. *Development Requirements*.

1. ~~*Stormwater detention in sinkholes*. Where flooding considerations and water quality considerations, as set forth in Section **410.710**, can be met, the volume of runoff storage in sinkholes can be counted toward storm water detention requirements, provided that proper sediment and erosion control measures are provided as set forth in Section **410.710**. The volume of required detention storage shall be determined as set forth in Section **410.690**. Excavation within the sinkhole flooding area to provide additional detention storage will not be allowed.~~
2. ~~*Modification of sinkholes to increase outflow rates*. Increasing outflow rates in sinkholes by excavating the sinkhole eye or installing disposal wells for diverting surface runoff to the groundwater system is prohibited, unless clear and imminent danger to the public health and safety can be demonstrated.~~

1. ~~*3*~~. *Setbacks and use restrictions*.
    a. No new construction of any of the following shall be permitted within thirty (30) feet of the sinkhole rim:
        (1). Residential, commercial or industrial structures.
        (2). Swimming pools.
        (3). Streets, highways or parking lots.
        (4). Storage yards for materials, vehicles and equipment.
        (5). Sanitary sewer lines.
    b. Use of pesticides and fertilizers within thirty (30) feet of the sinkhole rim is prohibited.
    c. Use of heavy construction equipment in unaltered sinkholes is prohibited.
    d. Construction of underground utilities is prohibited within the sinkhole rim.
    e. Recreational facilities such as hiking, jogging and bicycling trails, playgrounds, exercise courses and grass playing fields are permitted within the sinkhole area provided they are not located within the eye of the sinkhole.
    f. Golf courses are permitted subject to approval of a Management Plan for use of pesticides and fertilizers.
    g. Clearing and pruning of trees and undergrowth and limited grubbing of roots is permitted.

h. Landscaping and minor gardening is permitted outside of the sinkhole eye provided erosion and sediment discharge is limited through use of minimum tillage and mulches.
i. Construction of light incidental landscaping and recreational structures such as gazebos, playground equipment, etc. is permitted except in the sinkhole eye.

2. ~~4.~~ *Collapsed sinkholes*.
   a. Collapsed sinkholes may be stabilized and filled using approved techniques. A Grading Permit must be issued prior to performing any construction.
   b. The probable cause of the collapse and potential adverse impacts of filling the collapse shall be investigated and information submitted with the Grading Permit application.
3. ~~5.~~ *Altered sinkholes*.
   a. Filling or altering of sinkholes without a Grading Permit constitutes a violation of these regulations. In such cases corrective measures must be proposed within the time period specified in the Zoning Regulations for enforcement of such violations. No corrective or remedial measures shall be undertaken until the proposed remediation plan has been reviewed by the City and a Grading Permit issued.
   b. No Building Permits will be issued or zoning or subdivision approvals granted, until the remedial measures specified in the Grading Permit have been completed and approved.

410.710 Grading, Sediment And Erosion Control

~~*A. Goals And Objectives. The goal of the regulation is to effectively minimize erosion and discharge of sediment by application of relatively simple and cost effective Best Management Practices. This goal can be attained by meeting the following objectives:*~~

~~*1. Minimize the area disturbed by construction at any given time.*~~
~~*2. Stabilize disturbed areas as soon as possible by re-establishing sod, other forms of landscaping and completing proposed structures, pavements and storm drainage systems.*~~
~~*3. Provide for containment of sediment until areas are stabilized.*~~
~~*4. Provide permanent erosion controls.*~~

~~*B. General Design Guidelines. The following items must be considered in preparing a sediment and erosion control plan:*~~

~~*1. Temporary versus permanent controls.*~~
~~*a. The greatest potential for soil erosion occurs during construction. Temporary controls are those that are provided for the purpose of controlling erosion and containing sediment until construction is complete.*~~
~~*b. Temporary controls include straw or hay bale dikes, silt fences, erosion control blankets etc., which are not needed after the area is stabilized.*~~
~~*c. Permanent controls consist of riprap, concrete trickle channels, detention basins, etc., which will remain in place through the life of the development.*~~
~~*d. It is possible for the same facility to serve both a temporary and permanent purpose. The difference between temporary and permanent erosion control should be clearly recognized in preparing a sediment and erosion control plan.*~~
~~*2. Sheet flow versus concentrated flow.*~~

~~*a. In areas where runoff occurs primarily as sheet flow, containment of sediment is relatively simple. In these areas straw or hay bales, silt fences and vegetative filter areas can be very effective.*~~

~~*b. Where concentrations of flow occur containment of sediment becomes more difficult as the rate and volume of flow increase. In these areas more sophisticated controls such as sedimentation basins must be provided.*~~

~~*3. Slope. Control of erosion becomes progressively more difficult as the slope of the ground increases. Areas with steeply sloping topography and cut and fill slopes must be given special consideration.*~~

~~*4. Soils and geologic setting. Area soils and the geologic setting must be considered in preparing the plan and any special considerations deemed necessary for a particular site provided.*~~

5. ~~*Environmentally sensitive areas. Where construction occurs within the vicinity of permanent streams, springs, sinkholes, lakes or wetlands, special attention must be given to preventing discharge of sediment.*~~

A. ~~*C.*~~ *Grading Permits*.

1. *Permit requirements*. Grading permits are required for all construction sites with the following exceptions:
    a. Grading for single-family or duplex residences constructed in subdivisions where approved sediment and erosion controls have been constructed.
    b. Emergency construction required repairing or replacing roads, utilities or other items affecting the general safety and well being of the public.
    c. For emergency construction sites which would otherwise be required to obtain a permit and for which remedial construction will take more than fourteen (14) calendar days, application for the permit must be made within three (3) calendar days from the start of construction.
    d. The following activities, provided that they are not located within twenty-five (25) feet of a spring, sinkhole, wetland or watercourse:
        (1) Gardening or landscaping normally associated with single-family residences that cover less than one-half (1/2) acre.
        (2) Grading and repair of existing roads or driveways.
        (3) Cleaning and routine maintenance of roadside ditches or utilities.
        (4) Utility construction where the actual trench width is two (2) feet or less.
2. *Permit procedure*. The following items must be received prior to issuance of a Grading Permit:
    a. An approved grading, sediment and erosion control plan. The submittal and approval procedure is as follows for subdivisions, commercial and other sites.
        (1) The sediment and erosion control plan shall be submitted for review along with the plans for the proposed improvements.
        (2) Grading permits for commercial, multi-family or major subdivisions will be issued by the City Planner after the project plans have been approved.
3. *Plan requirements*. Plans must be prepared by and bear the seal of~~,~~ an engineer registered to practice in the State of Missouri. Plan requirements are set forth in ~~Section~~**Chapter 410**~~**410.660**~~ and in this Section. Plans will not be required in the following cases:
    a. Grading associated solely with a single-family residence.
    b. Grading or filling of less than one (1) acre if located outside of the allowable building areas and not located within twenty-five (25) feet of spring, sinkhole,

wetland or watercourse. In these instances a grading permit can be issued, providing an inspection of the site by a representative of the City does not reveal conditions that would warrant preparation of a detailed plan.

B. ~~*D*~~*. Other Permits*.

1. *NPDES storm-water permit*. ~~Effective October 1, 1992, construction~~ sites where the area to be disturbed is five **(1)**~~(5)~~ acres or more must apply for a storm-water discharge permit from the Missouri Department of Natural Resources. Permit requirements are set forth in 10 CSR 20-6.200 of the Missouri Clean Water Laws.
2. *"404" permit*. Grading activities in streams or wetlands may require a Department of the Army Permit under Section 404 of the Clean Water Act.

C. ~~*E*~~*. Design Standards And Criteria*. **Refer to Republic Stormwater Design for Design Standards and Criteria relating to Grading, Sediment and Erosion Control.**

1. ~~*Grading.*~~

~~a. *Maximum grades*. Cut or fill slopes shall not exceed four (4) to one (1).~~

~~b. *Maximum height*. Cut or fill slopes shall not exceed fifteen (15) feet in vertical height unless a horizontal bench area at least five (5) feet in width is provided for each fifteen (15) feet in vertical height.~~

~~c. *Minimum slope*. Slope in grassed areas shall not be less than one percent (1%).~~

~~d. *Construction specifications*. Construction for streets must comply with specifications set forth by the City of Republic. For all other areas, construction specifications stating requirements for stripping, materials, subgrade compaction, placement of fills, moisture and density control, preparation and maintenance of subgrade must be included or referenced on the plans or accompanying specifications submitted.~~

~~e. *Spoil areas.*~~

~~(1) Broken concrete, asphalt and other spoil materials may not be buried in fills within proposed building or pavement areas.~~

~~(2) Outside of proposed building and pavement areas, broken concrete or stone may be buried in fills, provided it is covered by a minimum of two (2) feet of earth.~~

~~(3) Burying of other materials in fills is prohibited.~~

~~f. *Stockpile areas*. Location of proposed stockpile areas shall be outlined on the plans and specifications for proper drainage included.~~

~~g. *Borrow areas*. The proposed limits of temporary borrow areas shall be outlined in the plans and a proposed operating plan described on the grading plan. Temporary slopes in borrow areas may exceed the maximums set forth above. At the time that borrow operations are completed, the area shall be graded in accordance with the criteria set forth above and reseeded.~~

~~2. *Sediment containment*.~~

~~a. *Existing vegetative filter area*. Existing vegetative filter areas may be used where:~~

~~(1) Unconcentrated sheet flow occurs;~~

~~(2) An area of existing vegetation a minimum of twenty-five (25) feet in width can be maintained between the area to be graded and a property line, watercourse, sinkhole, spring, wetland or classified lake;~~

~~(3) Existing ground slope is no greater than five (5) to one (1) (twenty percent (20%));~~

~~(4) The existing vegetative growth is of sufficient density and in sufficiently good condition to provide for filtration of sediment.~~

(5) Vegetative filter areas are a temporary and permanent practice.

b. *Hay/straw bale dike or silt fence*. Containment areas constructed of hay or straw bales or silt fence may be provided in areas where:

(1) Unconcentrated sheet flow occurs,

(2) An area of existing vegetation a minimum of twenty-five (25) feet in width cannot be maintained between the area to be graded and a property line, watercourse, sinkhole, spring, wetland or classified lake,

(3) Existing ground slope is no greater than five (5) to one (1) (twenty percent (20%)),

(4) Concentrated flow from an area no greater than one (1) acre occurs and a minimum volume of one thousand (1,000) cubic feet per acre is contained behind the dike. Either cereal grain straw or hay may be used for bale dikes. Straw/hay bale dikes shall be constructed as shown in Drawing 50. Straw/hale bale dikes and silt fences are temporary practices.

c. *Temporary containment berms*.

(1) Temporary containment berms may be provided for areas where concentrated flow from areas greater than one (1) acre and less than five (5) acres occurs. Temporary containment berms must contain a volume of one thousand (1,000) cubic feet per acre of drainage area.

(2) Temporary containment berms shall have a riprap outlet with a sediment filter as shown in Drawing 40 or a perforated pipe outlet as shown in Drawing 80.

(3) Details for temporary containment berms are shown in Drawing 30.

(4) Temporary containment berms and accumulated sediment may be completely removed after the tributary area is stabilized and must be removed prior to final acceptance and release of escrow.

d. *Sedimentation basin*.

(1) Sediment basins shall be provided for all areas where concentrated flow occurs from an area of five (5) or more acres. Sediment basins shall be designed to detain the runoff from one (1) inch of rainfall for a period of at least twenty four (24) hours.

Runoff shall be calculated using the methods contained in Chapter 2 of TR-55 (Reference 11), using the recommended curve number for newly graded areas from Table 2-2a.

Note: For construction sites in Republic an average value of runoff volume from one (1) inch of rainfall is approximately one thousand two hundred (1,200) cubic feet per acre, using a Curve Number of 90, as indicative of a mixture of type B and C soils. This value may be used in sizing sediment basins or the runoff volume determined using the values from Figure 2-1 of TR-55.

(2) Sediment basins shall be provided with an outflow structure consisting of:

(A). A flow restriction device which provides for the required detention time,

(B). An outfall pipe sized to carry the maximum estimated outflow rate,

(C). Protective structures at the pipe outlet to prevent crushing or damage of the end of the pipe,

(D). Protective structures to prevent blockage of the pipe with debris,

(E). Erosion protection at the pipe outlet. A typical outlet structure is shown in Drawing 140.

(3) An overflow spillway capable of discharging the peak flow rate for the four percent (4%) annual probability (25-year) storm while maintaining a minimum freeboard of one (1) foot.

(4) Overflow spillways may be sodded where the depth of flow at the crest is limited to no greater than six (6) inches and outlet channel velocities do not exceed five (5) feet per second for the minor (5-year) storm.

(5) Overflow spillways not meeting these restrictions must be constructed of riprap, concrete or other approved, non-erodible material.

3. *Erosion protection.*

a. *Seeding and mulching.*

(1) *Permanent seeding*. Permanent seeding fertilizer and mulch shall be applied at the rates set forth in Drawing 10 or according to other specifications, which are approved with the Grading Permit.

(2) Permanent seeding seasons are from March first (1st) to May fifteenth (15th) and August fifteenth (15th) to October fifteenth (15th).

(3) *Mulching*. Where slopes are less than four (4) to one (1), cereal grain mulch is required at the rate of one hundred (100) pounds per one thousand (1,000) square feet (four thousand five hundred (4,500) pounds per acre). Cereal grain mulch shall meet the requirements of Section 802 of the State Specifications (Reference 17) for Type 1 mulch.

(4) Where slopes are four (4) to one (1) or greater Type 3 mulch ("hydromulch") meeting the requirements of Section 802 of the State Specifications (Reference 17) shall be used.

(5) *Temporary seeding*. Whenever grading operations are suspended for more than thirty (30) calendar days between permanent grass or seeding periods, all disturbed areas must be reseeded with temporary cover according to Drawing 10. Temporary seeding season runs from May fifteenth (15th) to November fifteenth (15th).

(6) *Overseeding.* During the winter season (November fifteenth (15th) to March first (1st)) temporary seed and mulch shall be placed in on all completed areas or areas where grading is suspended for more than thirty (30) calendar days. During this period seed, mulch and soil amendments shall be applied at the following rates: Lime: 100% of specified quantity.* Fertilizer: 75% of specified quantity. Seed: 50% of specified quantity. Mulch: 100% of specified quantity. * Per Drawing 10. Areas seeded during this period shall be reseeded and mulched during the next permanent seeding season according to seeding requirements.

(7) *Maintenance.* Seeded areas must be maintained for one (1) year following permanent seeding.

b. *Cut and fill slopes*. Cut and fill slopes shall be protected from erosion by construction of straw bale dikes, silt fences, diversion berms or swales along the top of the slope.

(1) Where drainage must be carried down the slopes, pipe drains, concrete flumes, riprap chutes or other impervious areas must be provided. Suitable erosion control measures such as riprap stilling basins, must be provided at the bottom of the slope.

(2) Diversions shall be maintained until permanent growth is firmly established on the slopes.

(3) Typical diversion details are shown in Drawing 30. Riprap chute details are shown in Drawing 70.

c. *Channels and swales*. Permanent channels and swales shall be provided with a stabilized invert consisting of one of the following materials:

(1) *Sod*. Where the average velocity of flow is five (5) feet per second or less and there is no base flow, the channel shall be lined with sod.

(A). For channels with a bottom width less than fifteen (15) feet, sod shall extend up the side slope to a minimum height of six (6) inches above the toe. (Drawing 90).

(B). Channels with a bottom width of fifteen (15) feet or greater, shall be graded as shown in Drawing 90 and a low flow area, fifteen (15) feet in width lined with sod.

(C). The remainder of the channel slopes shall be seeded and mulched as provided above.

(2) *Erosion control blanket*. Commercial erosion control blankets may be used in lieu of sod provided that samples are submitted and approved by the City. The guaranteed maintenance period shall be one (1) year.

(3) *Non-erosive lining*. In grass channels where base flow occurs, a non-erosive low-flow channel of riprap or concrete must be provided. Low flow channels shall have a minimum capacity of five (5) cubic feet per second. Other suitable non-erosive materials may be specified with approval of the City.

(4) For channels which have an average velocity of five (5) feet per second or greater a non-erosive lining of riprap concrete or other approved material must be provided.

d. *Storm sewer and culvert outlets*. Erosion protection shall be provided at storm sewer and culvert outlets. Minimum erosion protection shall consist of a concrete toe wall and non-erosive lining, meeting the City's specifications for public improvements.

(1) The required length of non-erosive lining will not be decreased where flared end sections or headwalls are provided unless calculations and data to support the decrease in length are submitted and approved.

(2) Non-erosive lining shall consist of riprap, unless otherwise specified and approved. Field stone, gabions or riprap shall extend to the point at which average channel velocity for the peak flow rate from the minor (5-year) storm has decreased to five (5) feet per second maximum.

(3) The length of riprap to be provided shall be as follows: (See Drawing 120)

Average outlet velocity less than five (5) feet per second:
L = three (3) times the pipe diameter or culvert width.

Average outlet velocity less than five (5) to ten (10) feet per second:
L = length determined using Drawing 120.

Average outlet velocity greater than ten (10) feet per second:

(4) Use MHTD standard energy dissipater headwall. (Reference 17) The height of erosion protection shall be as shown in Drawing 120.

(5) Minimum toe wall dimensions are shown in Drawing 120. Where headwalls or flared end sections are specified, toe walls must be provided at the downstream end.

e. *Curb openings*. Where drainage has been approved by the City to flow from paved areas to grass areas through curb openings erosion protection shall be provided as shown in Drawing 130.

f. *Ditch checks and drop structures*. In grass channels grades and velocities may be controlled by use of ditch checks and drop structures. Riprap ditch checks may be required in natural channels where average velocity for the peak flow rate from the 5-year storm exceeds five (5) feet per second for post-development conditions.

g. *Spillways*. Erosion protection must be provided at spillways and outlet structures for detention ponds. Erosion protection shall extend to the point where flow has stabilized and average velocity in the outlet channel is five (5) feet per second or less.

4. *Temporary construction entrance*.

a. A minimum of one (1) temporary construction entrance is required at each site. Additional temporary entrances may be provided if approved. The location of each construction entrance shall be shown on the plan.

b. Only construction entrances designated on the sediment and erosion control plan may be used. Barricades shall be maintained if necessary to prevent access at other points until construction is complete.

c. Construction entrances shall be constructed of crushed limestone meeting the following specifications:

(1) Construction entrances shall be a minimum of twenty-five (25) feet wide and fifty (50) feet long.

(2) Minimum thickness of crushed limestone surface shall be six (6) inches. Additional two (2) inch lifts of crushed limestone shall be added at the discretion of the County if the surface of the initial drive deteriorates or becomes too muddy to be effective.

(3) In locations where an existing drive or street extends at least fifty (50) feet into the site, the existing drive may be designated as the construction entrance and construction of a new gravel entrance is not required, unless job conditions warrant as set forth in the preceding paragraph.

5. *Cleaning streets*. Streets both interior and adjacent to the site shall be completely cleaned of sediment at the end of construction and prior to release of security.

6. *Dust control*. The contractor will be required to use water trucks to water all roads and construction areas to minimize dust leaving the site when conditions warrant.
7. *Sequencing and scheduling*. Costs of sediment and erosion control can be minimized if proper consideration is given to sequencing and scheduling construction. Any special sequencing and scheduling considerations should be noted in the grading plan. A detailed schedule must be received from the contractor at the Pre-Construction Conference.

Findings of Fact

REPUBLIC MISSOURI
GROWING TOGETHER

Date of Hearing: 09/11/2023

Time: 6:00

Type of Application: Code Amendment

Name of Applicant: Subdivision Amendment (ORD 23-007)

Location: 540 E Civic Blvd

Based upon the facts presented during the course of this hearing, I have found that the application is generally:

Conforming to the City's adopted Land Use Plan	⊘ Yes	○ No
Conforming to the City's adopted Transportation Plan	⊘ Yes	○ No
Conforming to other adopted plans of the City (i.e. water, wastewater, parks, etc.)	⊘ Yes	○ No
Compatible with surrounding land uses	⊘ Yes	○ No
Able to be adequately served by municipal infrastructure	⊘ Yes	○ No
Aligned with the purposes of RSMo. 89.040	⊘ Yes	○ No

Statement of Relevant Facts Found:

Referencing standard manuals instead of keeping up w/ changes spelt out.

Based on these findings, I have concluded to recommend the application to the City Council for: ⊘ Approval ○ Denial

Commissioner Name: Brian Daubman

Commissioner Signature: [signature]

Date: 9-11-23

Findings of Fact

REPUBLIC
MISSOURI
GROWING TOGETHER

Date of Hearing:	Time:	Type of Application:
09/11/2023	6:00	Code Amendment

Name of Applicant:	Location:
Subdivision Amendment (ORD 23-007)	540 E Civic Blvd

Based upon the facts presented during the course of this hearing, I have found that the application is generally:

Conforming to the City's adopted Land Use Plan	☑ Yes	○ No
Conforming to the City's adopted Transportation Plan	☑ Yes	○ No
Conforming to other adopted plans of the City (i.e. water, wastewater, parks, etc.)	☑ Yes	○ No
Compatible with surrounding land uses	☑ Yes	○ No
Able to be adequately served by municipal infrastructure	☑ Yes	○ No
Aligned with the purposes of RSMo. 89.040	☑ Yes	○ No

Statement of Relevant Facts Found:

Based on these findings, I have concluded to recommend the application to the City Council for: ☑ Approval ○ Denial

Commissioner Name:	Commissioner Signature:	Date:
Jeff Hays		9/11/23

Findings of Fact

REPUBLIC
MISSOURI
GROWING TOGETHER

Date of Hearing:	Time:	Type of Application:
09/11/2023	6:00	Code Amendment

Name of Applicant:	Location:
Subdivision Amendment (ORD 23-007)	540 E Civic Blvd

Based upon the facts presented during the course of this hearing, I have found that the application is generally:

Conforming to the City's adopted Land Use Plan	⊗ Yes	○ No
Conforming to the City's adopted Transportation Plan	⊗ Yes	○ No
Conforming to other adopted plans of the City (i.e. water, wastewater, parks, etc.)	⊗ Yes	○ No
Compatible with surrounding land uses	⊗ Yes	○ No
Able to be adequately served by municipal infrastructure	⊗ Yes	○ No
Aligned with the purposes of RSMo. 89.040	⊗ Yes	○ No

Statement of Relevant Facts Found:

Based on these findings, I have concluded to recommend the application to the City Council for: ⊗ Approval ○ Denial

Commissioner Name:	Commissioner Signature:	Date:
John Alexander		9/11/23

Findings of Fact

REPUBLIC MISSOURI
GROWING TOGETHER

Date of Hearing: 09/11/2023

Time: 6:00

Type of Application: Code Amendment

Name of Applicant: Subdivision Amendment (ORD 23-007)

Location: 540 E Civic Blvd

Based upon the facts presented during the course of this hearing, I have found that the application is generally:

Conforming to the City's adopted Land Use Plan	☒ Yes	☐ No
Conforming to the City's adopted Transportation Plan	☒ Yes	☐ No
Conforming to other adopted plans of the City (i.e. water, wastewater, parks, etc.)	☒ Yes	☐ No
Compatible with surrounding land uses	☒ Yes	☐ No
Able to be adequately served by municipal infrastructure	☒ Yes	☐ No
Aligned with the purposes of RSMo. 89.040	☒ Yes	☐ No

Statement of Relevant Facts Found:

Based on these findings, I have concluded to recommend the application to the City Council for: ☒ Approval ☐ Denial

Commissioner Name: CYNTHIA HYDER

Commissioner Signature: C. Hyder

Date: 9/11/2023

Findings of Fact

REPUBLIC MISSOURI
GROWING TOGETHER

Date of Hearing: 09/11/2023

Time: 6:00

Type of Application: Code Amendment

Name of Applicant: Subdivision Amendment (ORD 23-007)

Location: 540 E Civic Blvd

Based upon the facts presented during the course of this hearing, I have found that the application is generally:

Conforming to the City's adopted Land Use Plan	☒ Yes	○ No
Conforming to the City's adopted Transportation Plan	☒ Yes	○ No
Conforming to other adopted plans of the City (i.e. water, wastewater, parks, etc.)	☒ Yes	○ No
Compatible with surrounding land uses	☒ Yes	○ No
Able to be adequately served by municipal infrastructure	☒ Yes	○ No
Aligned with the purposes of RSMo. 89.040	☒ Yes	○ No

Statement of Relevant Facts Found:

Based on these findings, I have concluded to recommend the application to the City Council for: ☒ Approval ○ Denial

Commissioner Name:	Commissioner Signature:	Date:
Darran Campbell	Darran Campbell	9-11-23

AGENDA ITEM ANALYSIS

Project/Issue Name:	23-41 An Ordinance of the City Council Approving and Adopting Standard Specifications and Details for Water and Sewer Construction, to Replace the Current Construction Specifications and Stormwater Management and Design Criteria Manual, and Amending Title V, Chapter 510, Article 510-IV, Section 510.120 ("Construction Specifications and Replacing the Construction Specifications for Public Improvements") of the Municipal Code of the City of Republic, Missouri to Reference the Specifications Adopted Herein.
Submitted By:	Angel Falig
Date:	September 13, 2023

Issue Statement

Consideration to approve the adoption of the revised Standard Specifications and Details for Water and Sewer Construction.

Discussion and/or Analysis

The City of Republic is requesting Amendments to the City's Construction Specifications for Public Improvements. The Standard Specifications and Details for Water and Sewer Construction has been revised to an updated specification format from MasterFormat 1995 Type to MasterFormat 2004.

The previous specification format would not allow for the City to include topics due to limited specification numbers. The goal of this amendment is to adopt a specification format that is industry standard and will allow for flexibility in modifying the specifications to best suit the needs of the City as it relates to water, sewer, roadway and sidewalk infrastructure.

The proposed adoption of this manual will go hand in hand with the amendments proposed for Chapter 410 Subdivision Regulations.

Recommended Action

Staff recommends the approval of the referenced Amendment.

AN ORDINANCE OF THE CITY COUNCIL APPROVING AND ADOPTING STANDARD SPECIFICATIONS AND DETAILS FOR WATER AND SEWER CONSTRUCTION, TO REPLACE THE CURRENT CONSTRUCTION SPECIFICATIONS AND STORMWATER MANAGEMENT AND DESIGN CRITERIA MANUAL, AND AMENDING TITLE V, CHAPTER 510, ARTICLE 510-IV, SECTION 510.120 ("CONSTRUCTION SPECIFICATIONS AND REPLACING THE CONSTRUCTION SPECIFICATIONS FOR PUBLIC IMPROVEMENTS") OF THE MUNICIPAL CODE OF THE CITY OF REPUBLIC, MISSOURI TO REFERENCE THE SPECIFICATIONS ADOPTED HEREIN

WHEREAS, the City of Republic, Missouri, ("City" or "Republic") is a municipal corporation and Charter City located in Greene County, Missouri, being duly created, organized, and existing under the laws of the State of Missouri; and

WHEREAS, on February 23, 2004, via Ordinance 04-20, City Council approved and adopted a set of Construction Specifications for Public Improvements, prepared by City staff under the supervision of the BUILDS Director; and

WHEREAS, on December 8, 2014, via Ordinance 14-34, City Council approved and adopted an updated version of the Construction Specifications for Public Improvements, prepared by City staff under the supervision of the BUILDS Director; and

WHEREAS, City staff have prepared a new version of the specifications referenced herein, entitled "Standard Specifications and Details for Water and Sewer Construction" ("2023 Specifications") and propose to replace the current specifications with the 2023 Specifications; and

WHEREAS, City Council desires to approve and adopt the 2023 Specifications, to replace the current specifications and all previous versions thereof; and

WHEREAS, Section 510.120 of the Municipal Code of the City of Republic, Missouri ("City Code"), which references and incorporates a prior version of the specifications addressed herein, shall be amended to reference and incorporate the 2023 Specifications approved herein.

NOW, THEREFORE, BE IT ORDAINED BY THE CITY COUNCIL OF THE CITY OF REPUBLIC, MISSOURI, AS FOLLOWS:

Section 1: The manual entitled "Standard Specifications and Details for Water and Sewer Construction", attached and labeled "Attachment 1", is expressly incorporated herein by reference and is hereby approved and adopted in all respects.

Section 2: Title V ("Building and Construction"), Chapter 510 ("Streets, Sidewalks, And Other Public Places"), Article 510-IV ("Streets, Sidewalks, Etc -- Construction And Maintenance -- Assessments, Tax Bills"), Section 510.210 ("Construction Specifications") is hereby amended as follows:

Chapter 510 Streets, Sidewalks, And Other Public Places

Article 510-IV Streets, Sidewalks, Etc -- Construction And Maintenance -- Assessments, Tax Bills

510.120 Construction Specifications

All public improvements including modifications to existing streets, sidewalks and driveways within the City of Republic, or within subdivisions intended to be annexed into the City of Republic, shall be constructed in conformance with the latest edition of the "~~Construction Specifications for Public Improvements, City of Republic~~ **Standard Specifications and Details for Water and Sewer Construction**" on file at the offices of the City of Republic ~~Public Works~~ **BUILDS** Department and incorporated herein by reference.

EXPLANATION(S) - Matter in **bold underlined** text in the above is added language. Matter in ~~strikethrough~~ text in the above is deleted.

Section 3: All ordinances and parts of ordinances in conflict herewith are hereby repealed.

Section 4: The City Administrator or his/her designee, on behalf of the City, is authorized to take the necessary steps to execute this Ordinance.

Section 5: The WHEREAS clauses above are specifically incorporated herein by reference.

Section 6: The provisions of this Ordinance are severable, and if any provisions hereof are declared invalid, unconstitutional, or unenforceable, such determination shall not affect the validity of the remainder of this Ordinance.

Section 7: This Ordinance shall take effect and be in force from and after its passage as provided by law.

PASSED AND APPROVED at a regular meeting of the City Council of the City of Republic, Missouri, this _____ day of _____, 2023.

_____
Attest: Matt Russell, Mayor

_____
Laura Burbridge, City Clerk

Approved as to Form:



Megan McCullough, City Attorney

Final Passage and Vote:

REPUBLIC BUILDS
Public Works • Community Development

CITY OF REPUBLIC, MISSOURI
STANDARD SPECIFICATIONS AND DETAILS
FOR WATER AND SEWER CONSTRUCTION

September 2023

This page was intentionally left blank.

CITY OF REPUBLIC, MISSOURI
STANDARD SPECIFICATIONS AND DETAILS FOR WATER AND SEWER CONSTRUCTION

TABLE OF CONTENTS

SPECIFICATIONS

SECTION	TITLE	PAGE
010000	DEFINITIONS, SUBMITTAL, AND PROCEDURES	1
012000	RIGHT OF WAY TECHNICAL SPECIFICATIONS	10
221313	SANITARY SEWERS	17
312050	SITE PREPARATION AND EARTHWORK	35
329200	SEEDING AND SODDING	58
330130.11	TELEVISION INSPECTION OF SEWERS	65
330130.41	CLEANING OF SEWERS	69
330130.43	REMOVAL OF PROTRUDING SERVICE CONNECTIONS	74
330130.72	CURED-IN-PLACE PIPE LINING	77
330130.74	SERVICE LATERAL CONNECTION LINER	93
330130.77	CURED-IN-PLACE PIPE SHORT LINERS	102
330130.81	MANHOLE REHABILITATION	109
330130.82	EPOXY LINING FOR CONCRETE MANHOLES	112
330130.86	MANHOLE RIM ADJUSTMENTS	117
330524	UTILITY CASINGS	119
331100	PRESSURE PIPE	123
331216	UTILITY VALVES AND ACCESSORIES	133
331223	SUBMERSIBLE LIFT STATION	153
333150	PIPE INSTALLATION	163
333213	SEWAGE LIFT STATION - WET WELL MOUNTED	173
333900	UTILITY STRUCTURES	184
347000	CONCRETE	189
347100	CONCRETE CURBS, GUTTERS, SIDEWALKS, MEDIAS AND PAVED DRAINAGE	231
347200	ASPHALT CONCRETE PAVEMENT	243

STANDARD DETAILS

NUMBER	TITLE
1	AIR RELEASE VALVE MANHOLE
2	ANCHOR COUPLING
3	BACKFLOW PREVENTER
4	BORING CASING PIPE AND END SEAL
5	FIRE HYDRANT WITH ISOLATION VALVE (MAINS 5’ DEEP OR LESS)
6	FIRE HYDRANT WITH ISOLATION VALVE (MAINS DEEPER THAN 5’)
7	FLUSH VALVE ASSEMBLY
8	LAYING CONDITIONS FOR DIP TYPE 1 (UNDER DRIVING SURFACE)
9	LAYING CONDITIONS FOR DIP TYPE 2 (NOT UNDER DRIVING SURFACE)
10	MANHOLE FRAME AND COVER – TYPE A
11	MANHOLE FRAME AND COVER – TYPE B
12	MANHOLE FRAME AND COVER – TYPE C
13	MEGALUG
14	RESIDENTIAL WATER METER BOX INSTALLATION
15	RESTRAINED LINE VALVE INSTALLATION

16	SEWER SERVICE CONNECTION
17	SLOPE ANCHOR
18	STANDARD MANHOLE DETAIL
19	STANDARD OUTSIDE DROP MANHOLE DETAIL
20	STANDARD INSIDE DROP MANHOLE DETAIL
21	STRADDLE BLOCK
22	TAPPING SLEEVE AND VALVE
23	THRUST BLOCK
24	VALVE EXTENSION BOX
25	WATER SERVICE DETAIL
26	BACKWATER VALVE DETAIL
27	EMBEDMENT OF PIPE
28	ASPHALT STREET REPAIR
29	CONCRETE STREET REPAIR
30	TYPICAL STREET SECTIONS
31	CONCRETE CURB AND GUTTER
32	CONCRETE SIDEWALK AND DRIVEWAY
33	CURB RAMP TYPE I
34	CURB RAMP TYPE II
35	CONCRETE JOINT DETAILS
36	CURB INLETS 18” OR LESS
37	CURB INLET 21” OR GREATER
38	TOP SLAB REINFORCEMENT
39	RING AND COVER FOR CURB INLETS
40	CONCRETE CULVERT CAP-DRIVEWAYS
41	RIPRAP

SECTION 010000 – DEFINIITIONS, SUBMITTALS, AND PROCEDURES:

A. BASIC DEFINITIONS – general terms used in these Construction Specifications for Public Improvements are covered in this Section.

City
The City of Republic, Missouri. The governmental entity which will assume ownership of the completed Public Improvements Work from the Developer/Owner following the City's inspection of the completed Public Improvements Work and finding that the completed Public Improvements Work meets all the requirements set forth by the City for the construction of public improvements in the City of Republic, Missouri.

Contractor
Any person, firm or corporation with whom the Developer/Owner enters into an agreement to perform the Work for the Project, including any Public Improvements.

Developer/Owner
The person, firm, or corporation owning the property being developed and owning the Public Improvements Work until the Public Improvements Work is completed, approved and accepted by the City. The person, firm, or corporation who will transfer ownership of the Public Improvements Work to the City upon completion of the Public Improvements Work and the approval and acceptance thereof by the City.

Engineer
The person, firm, or corporation, licensed to perform engineering services in the State of Missouri, whom the Developer/Owner employs to prepare drawings and specifications covering the Work, including any Public Improvements, and whom the Developer may designate as a representative to communicate with the Public Works Department.

Inspector
The person, firm, or corporation, designated to perform inspections and oversee the construction of Work for the Project on behalf of the City of Republic

Nonconformance

Non-conformance
Any work found to be non-compliant by the Builds Administrator or his designee with these specifications, references and codes adopted by the City, and references and codes applicable to the construction project as required by the State of Missouri.

Project
The total construction of which the Work to be provided under the Construction Specifications may be the whole, or part as indicated elsewhere in the Construction Specifications or on the City approved construction drawings.

Right of Way Manager
The appropriate governmental entity responsible for the management and oversight of a public right of way affected by the proposed work. For the City of Republic roads, the Public Works Director or his designee. For County roads the Greene County Highway Department Administrator or his designee. For State roads the Missouri Department of Transportation Southwest District, District Engineer or his designee.

Work
The entire completed construction of the various separately identifiable parts thereof required to be furnished under the Construction Specifications and the City approved construction drawings. Work includes and is the result of performing or furnishing labor and furnishing and incorporating materials and equipment into the construction, and performing or furnishing services and furnishing documents, all as required by the Construction Specifications.

SECTION 010000 – DEFINIITIONS, SUBMITTALS, AND PROCEDURES: continued

B. PROJECT MEETINGS

1. Preconstruction

   a. Public Works Department will administer a meeting prior to commencement of any improvements to establish a working understanding between the parties as to their relationships during conduct of the Work.

   b. Preconstruction conference shall be attended by:

      (1) Contractor and their superintendent.

      (2) Representatives of principal Subcontractors and Suppliers.

      (3) Public Works Department staff.

      (4) Developer/Owner or their representative.

   c. Agenda:

      (1) Projected construction schedules.

      (2) Critical Work sequencing.

      (3) Project coordination.

      (4) Procedures and Processing of:

         (a) Field decisions.

         (b) Substitutions.

         (c) Submittals.

         (d) Procedures for testing.

         (e) Procedures for maintaining record documents.

C. SUBMITTALS

1. Compliance Submittals include shop drawings and product data which are prepared by the Contractor, Subcontractor, manufacturer, or Supplier and submitted by the Contractor to the Engineer as a basis for approval of the use of EQUIPMENT AND MATERIALS proposed for incorporation in the Work or needed to describe installation, operation, maintenance, or technical properties.

a. Shop drawings include custom-prepared data of all types including drawings, diagrams, material schedules, templates, instructions, and similar information not in standard printed form applicable to other projects.

b. Product data includes standard printed information on materials, products and systems; not custom-prepared for this Project, other than the designation of selections from available choices.

c. Compliance submittals shall include, but are not limited to the following:

(1) Manufacturer's specifications.

(2) Catalogs, or parts thereof, of manufactured equipment.

(3) Shop fabrication and erection drawings.

(4) Concrete mix design information.

(5) All drawings, catalogs or parts thereof, manufacturer's specifications and data, samples, instructions, and other information specified or necessary.

(6) Record drawings

2. Submittals shall be complete with respect to dimensions, design criteria, materials of construction, and other information specified to enable Engineer to review the information effectively.

3. All words and dimensional units shall be in the English language. Metric dimensional unit equivalents may be stated in addition to the English units.

4. Contractor shall maintain in a safe place at the site one record copy of all Drawings, Specifications, and Addenda in good order and annotated to show all changes made during construction. Upon completion of the Work, these record documents will be delivered to the Engineer who shall provide reproducible copies of the revised drawings to the City.

D. TEMPORARY BARRIERS AND CONTROLS

1. Protection of Work and Property.

a. General

(1) Provide protection, at all times, against rain, wind, storms, frost, freezing, condensation, or heat so as to maintain all Work and Equipment and Materials free from injury or damage. At the end of each day all new Work likely to be damaged shall be appropriately protected.

(2) Notify Inspector immediately at any time operations are stopped due to conditions which make it impossible to continue operations safely or to obtain proper results.

(3) Construct and maintain all necessary temporary drainage and do all pumping necessary to keep excavations, floors, pits, trenches, manholes, and ducts free of water.

b. Property Other than Developer's/Owner's:

(1) Report immediately to the owners thereof and promptly repair damage to existing facilities resulting from construction operations.

(2) Names and telephone numbers of representatives of agencies and utilities having jurisdiction over streets and utilities in the Work area can be obtained from the City for the agencies listed below. Concerned agencies or utilities shall be contacted a minimum of 48 hours prior to performing Work, closing streets and other traffic areas, or excavating near underground utilities or pole lines.

(a) Water.

(b) Gas.

(c) Sanitary sewers.

(d) Storm drains.

(e) Pipeline companies.

(f) Telephone.

(g) Electric.

(h) Municipal streets.

(i) Fire.

(j) Police.

(k) Right of Way Manager

(3) Operation of valves or other appurtenances on existing utilities, when required, shall be by or under the direct supervision of the owning utility.

(4) Where fences are to be breached on private property, the owners thereof shall be contacted, and arrangements made to ensure proper protection of any livestock or other property thus exposed.

(5) The applicable requirements specified for protection of the Work shall also apply to the protection of existing property of others.

(6) Before acceptance of the Work by City, restore all property affected by Contractor's operations to the original or better condition.

2. Barriers.

   a. Furnish, install, and maintain suitable barriers as required to prevent public entry, protect the public, and to protect the Work, existing facilities, trees, and plants from construction operations. Remove when no longer needed or at completion of Work.

   b. Barriers shall be required on all unattended excavations and at the direction of the Inspector.

   c. Materials may be new or used, suitable for the intended purpose, but must not violate.

   d. requirements of applicable codes and standards or regulatory agencies.

   e. Barriers shall be of a neat and reasonable uniform appearance, structurally adequate for the required purposes.

   f. Maintain barriers in good repair and clean condition for adequate visibility.

   g. Relocate barriers as required by progress of Work.

   h. Repair damage caused by installation and restore area to original or better condition and clean the area.

3. Environmental controls.

   a. Dust Control

      (1) Provide positive methods and apply dust control materials to minimize raising dust from construction operations; and to prevent airborne dust from dispersing into the atmosphere.

   b. Water and Erosion Control

      (1) Provide methods to control surface water to prevent damage to the Project, the site, or adjoining properties.

      (2) Plan and execute construction and earthwork by methods to control surface drainage from cut, fill, borrow, and waste disposal areas, to prevent erosion and sedimentation.

         (a) Hold the areas of bare soil exposed at one time to a minimum.

         (b) Provide temporary control measures such as berms, dikes, drains and erosion barriers.

      (3) Control fill, grading, and ditching to direct surface drainage away from excavations, pits, tunnels, and other construction areas; and to direct drainage to proper runoff.

(4) Provide, operate, and maintain hydraulic equipment of adequate capacity to control surface and groundwater.

(5) Dispose of drainage water in a manner to prevent flooding, erosion, or other damage to any portion of the site or to adjoining areas.

c. Debris Control and Clean-Up:

(1) Keep the premises free at all times from accumulations of debris, waste materials, and rubbish caused by construction operations and employees. Responsibilities shall include:

(a) Adequate trash receptacles about the site, emptied promptly when filled.

(b) Periodic cleanup to avoid hazards or interference with operations at the site and to maintain the site in a reasonably neat condition.

d. Pollution Control:

(1) Provide methods, means, and facilities required to prevent contamination of soil, water, or atmosphere by the discharge of hazardous or toxic substances from construction operations.

(2) Provide equipment and personnel, perform emergency measures required to contain any spillages, and to remove contaminated soils or liquids. Excavate and dispose of any contaminated earth off-site in approved locations deemed acceptable by the appropriate regulatory agency and replace with suitable compacted fill and topsoil.

(3) Take special measures to prevent harmful substances from entering public waters, sanitary sewers, storm sewers, or waters of the state.

4. Traffic control and use of roadways.

a. Provide, operate, and maintain equipment, services, and personnel, with traffic control and protective devices, as required to expedite vehicular traffic flow on haul routes, at site entrances, on-site access roads, and parking areas. This includes traffic signals and signs, flagmen, flares, lights, barricades, and other devices or personnel as necessary to adequately protect the public. Traffic control measures shall be reviewed and approved by the Right of Way Manager.

b. Remove temporary equipment and facilities when no longer required. Restore grounds to original, better, or specified condition when no longer required.

c. Provide and maintain suitable detours or other temporary expedients if necessary.

d. Bridge over open trenches where necessary to maintain traffic.

e. Consult with governing authorities to establish public thoroughfares which will be used as haul routes and site access. All operations shall meet the approval of owners or agencies having jurisdiction.

f. Repair roads, walkways, and other traffic areas damaged by operations. Keep traffic areas as free as possible of excavated materials and maintain in a manner to eliminate dust, mud, and hazardous conditions.

g. All operations and repairs shall meet the approval of owners or agencies having jurisdiction.

E. NON-CONFORMANCE CORRECTIVE ACTION PROCEDURE

1. All instances of non-conformance will be reported as follows:

   a. 1st Non-conformance Report (NCR): The General Contractor will receive a verbal warning/ discussion on site of how contractor will resolve the non-conformance issue. The warning will be inclusive of repercussions for the next NCR.

   b. 2nd NCR: The General Contractor would be required to stop work for the remainder of the working day. A formal letter or email shall be sent to the Builds Department stating, in detail, the corrective action taken to resolve the NCR.

   c. 3rd NCR: The General Contractor would be issued a stop work order. A formal meeting shall be held in the Builds Department between the General Contractor and the Build's Department Project Manager and Inspector to discuss stoppage of work and planned resolution to resolve the NCR(s).

2. Timeframe:

   a. The General will be given seven (7) calendar days at the issuance of an NCR to resolve the issues.

F. ENGINEER'S FINAL CERTIFICATION OF COMPLETION

1. The Engineer shall perform site inspections as necessary to provide the City with a Certificate of Completion. Certificate shall state that all improvements have been constructed in general compliance with the City approved construction drawings and City Construction Specifications. Certificate of Completion shall bear the name, signature, current date and Missouri Registration Number of the Engineer.

2. Upon completion of the sanitary sewer line the Engineer shall submit a copy of the duly executed "Application for Letter of Authorization" along with all testing data to the City of Republic and to the Missouri Department of Natural Resources. Upon the City's receipt of the Letter of Authorization from Missouri Department of Natural Resources the sanitary sewer line will be allowed to be placed in service.

3. Upon completion of the water main the Engineer shall submit a copy of the duly executed "Application for Water Main Extension - Final Construction Approval" along with all testing data to the City of Republic and to the Missouri Department of Natural Resources. Upon the City's receipt of the Final Construction Approval from Missouri Department of Natural Resources the water main will be allowed to be placed in service.

END OF SECTION 010000

This page was intentionally left blank.

SECTION 012000 – RIGHT OF WAY TECHNICAL SPECIFICATIONS:

PART 1 - GENERAL

1.01 RELATED SPECIFICATIONS

A. Work related to the following shall be covered in Section 312050 – Site Preparation and Earthwork:
   1. Subgrade preparation.
   2. Excavating.
   3. Trenching.
   4. Sheeting & Shoring
   5. Filling.
   6. Embankment construction.
   7. Backfilling including controlled low-strength material (CLSM).
   8. Compacting.
   9. Grading.
   10. Riprapping.
   11. Topsoiling.

B. Section 329200 – Seeding and Sodding

PART 2 - CONSTRUCTION

2.01 SUMMARY OF WORK:

A. Work Covered by These Specifications: shall consist of any and all utility work performed or to be performed in, under, or through easements, rights-of-way, streets, or alleys owned by the City of Republic, including but not limited to water supply, sanitary sewer, storm sewer, telephone, fiber optic cable, gas pipelines, electrical conduit or conductors, cable television lines, and telecommunication facilities. It is to include repair of street cuts, required final grading, clean up, disposal of surplus materials and seeding or sodding.

B. Work Sequence: Permit Holder, or their Contractor shall schedule their work to allow emergency vehicle access to public and private property at all times. Private drives and public streets and alleys shall be opened for use at the end of each workday, unless prior written consent issued by the City.

C. The Permit Holder shall confine construction equipment, storage of materials and equipment, and operations or workers to areas within the public right-of-way and easements of record as indicated on the drawings or as directed by the Engineer. If Permit Holder proposes to use any private property for their use, they shall be solely responsible for making arrangements for such use with the property owner. The City shall not be liable for any damages caused by Permit Holder's use of such property.

2.02 EXISTING INSTALLATION AND STRUCTURES

A. Utility poles, pipelines and other existing above ground and underground installations and structures in the vicinity of the Work are to be indicated on the plans according to the best information available to the Permit Holder, City and Engineer.

B. Permit Holder shall make every effort to protect such installations and structures. They shall contact the Owners of such installations and structures and prospect in advance of trench excavation. Any delays or extra cost to the Permit Holder caused by such installations and structures, whether shown on the plans or not, or found on locations different than those indicted, shall not constitute a claim against the City for extra work, additional payment, or damages.

C. Damage to existing above ground and underground installation or structures caused by the Permit Holder shall be repaired by the Permit Holder as directed by the Owner of such installation or structure. The Owner of such installation or structure shall be notified immediately of any such damage and repairs made as soon as possible to keep the interruption of service to a minimum. The Permit Holder shall bear any costs assessed because of such repairs and shall hold the City

harmless

2.03 TRAFFIC CONTROL & SAFETY

A. The Permit Holder shall conduct their work as to interfere as little as possible with public travel, whether vehicular or pedestrian. Whenever it is necessary to cross, obstruct, or close roads, driveways, and walks, whether public or private, the Permit Holder shall at their own expense provide and maintain suitable and safe bridges, detours or other temporary expedients for the accommodations of public and private travel, and shall give reasonable notice to the Owners of private drives before interfering with them. Prior to interfering with the public travel in any way, the Permit Holder shall notify the City with information as to the extent of the interference and the length of time of such interference.

B. All streets, roads, highways, and other public thoroughfares, which are closed to traffic, shall be protected by means of effective barricades on which shall be placed acceptable warning signs. Barricades shall be located at the nearest intersecting public highway or street on each side of the blocked sections.

C. All barricades, signs, lights and other protective devices shall be installed and maintained in conformity with the Manual of Uniform Traffic Control Devices and applicable statutory requirements, and where within highway rights-of-way, as required by the authority having jurisdiction there over.

D. All open trenches and other excavations shall be provided with suitable barriers, signs and lights to the extent that adequate protection is provided to the public. Obstructions, such as material piles and equipment, shall be provided with similar warning signs and lights. All barricades and obstructions shall be illuminated by means of warning lights at night. All lights used for this purpose shall be kept burning from sunset to sunrise. Materials stored upon or alongside public streets shall be so placed, and the work at all times shall be so conducted, as to cause the minimum obstructions and inconvenience to the traveling public.

2.04 INFRASTRUCTURE INSTALLATION

A. Infrastructure to be installed and dedicated to the City shall be installed in compliance with all applicable sections of this specification.

B. Infrastructure to be owned and operated by an entity other than the City Shall be installed in conformance to owners individual specifications and shall not interfere with the City's Infrastructure.

2.05 PIPE EMBEDMENT

A. Granular fill material shall be used as shown on the detail plans. Granular fill may be crushed rock or gravel and shall meet the requirements for Type 2 Aggregate for Base, Gradation B, Missouri Standard Specifications for Highway Construction. For water mains the granular fill shall be placed under and around the pipe up 12" above top of pipe. For sewer lines granular fill shall be placed under and around the pipe up to an elevation at least 12 inches above the barrel of the pipe. Natural gas lines may be directly bedded, without granular fill, if so directed by the Engineer for the installing natural gas utility. Granular fill material shall be placed in a manner as to provide uniform and continuous support and shall not disturb alignment of the pipe during placement.

B. Compacted Backfill:

1. 90% compaction will be required where the line passes under lawns, pasture, and within the street right-of-way.
2. The average density of the trench backfill shall be 90% of maximum density. Material shall be placed in lifts as required for adequate compaction with variations in lift thickness depending on soil and on method of compaction. Completed backfill shall have no less than 90% density, excluding the top few inches to be used as seedbed or for bedding sod.

3. Compaction may be by hand tamping, tamping machine, or other methods approved by the Engineer. Permit Holder will prepare test pits for sampling and testing and evaluation of compaction procedures to be conducted by the Permit Holder at Inspectors request.
4. 95% compaction will typically be required under streets, driveways, and walkways. Flowable fill may be used instead of compacted backfill.
5. Placement of material and compaction for 95% compacted backfill shall be as described above for 90% compacted backfill except a minimum of 95% of maximum density must be maintained throughout the backfill.
6. Wherever the terms " % of Maximum Density" or "Optimum Moisture" are used, Maximum Density and Optimum Moisture shall be determined by the Standard Compaction Test as defined by ASTM D698.
7. Field Density Test: Field density shall be obtained using the sand cone method (ASTM D1556), by the balloon method (ASTM D2167), or nuclear density gauge (ASTM D2922). The calculated density obtained in this test is divided by the Maximum Density as determined by the Standard Compaction Test to determine the percent compaction obtained.

C. Responsibility of Permit Holder for Backfill Settlement:
1. Where 90% and 95% compaction is called for, the Permit Holder shall be responsible financially, and otherwise, for a period of one year after completion of work, for
   a. All settlement of trench and other backfill which may occur from time of original backfilling
   b. The refilling and repair of all backfill settlement and the repair or replacement to the original or a better condition of all pavement, top surfacing, driveways, walks, surface structures, utilities, drainage facilities, and sod which have been damaged as a result of backfill settlement or which have been removed or destroyed in connection with backfill replacement operations.
   c. All damage claims or court actions against the City for any damage directly or indirectly caused by backfill settlement.
2. The Permit Holder shall make, or cause to be made, all necessary backfill replacements, and repairs or replacements appurtenant thereto, within thirty days after due notification by the Engineer or City.

2.06 DRAINAGE MAINTENANCE

A. Trenches across roadways or driveways adjacent to drainage ditches or water courses shall not be backfilled prior to the completion of backfilling of the trench on the upstream side of the roadway to prevent the impounding of water after the pipe has been laid. Bridges and other temporary structures required to maintain traffic across such unfilled trenches shall be constructed and maintained by the Permit Holder. Backfilling shall be done so that water will not accumulate in unfilled or partially filled trenches. All material deposited in roadway ditches or other water courses crossed by the line of trench shall be removed immediately after backfilling is completed and the section grades and contours of ditches or water courses shall be restored to their original condition. Surface drainage shall not be obstructed longer than necessary.

2.07 DISPOSAL OF EXCESS EXCAVATED MATERIAL

A. All excess excavated materials shall be disposed of away from the site of the Work. The Permit Holder shall be responsible for locating areas for disposal of such materials.

B. Excavated rock in excess of the amount permitted to be actually installed in trench backfill, junk, and debris encountered in excavation work, and other similar waste material shall be disposed of away from the site of the Work.

SECTION 012000 – RIGHT OF WAY TECHNICAL SPECIFICATIONS: continued

PART 3 - CLEAN UP AND RESTORATION

3.01 GENERAL

A. The Permit Holder shall restore all surfaces equal to or better than its original condition unless otherwise approved by the City. Restoration includes pavement, sidewalks, alleys, lawns, etc.

B. Seeding and fertilizing is required where any utility excavation crosses established lawns, pastureland or right-of-way of the City or in other areas regularly grassed and mowed and shall be in conformance with Section 329200 – Seeding and Sodding

3.02 STREET, DRIVEWAY, ALLEY, AND SIDEWALK REPAIRS:

A. Crushed Stone Surface:

1. Six inches of compacted stone base meeting Missouri Standard Specifications for Highway Construction, Section 1007.1, Type 1 Aggregate, is to be placed over cut portion of street or alley.

B. Concrete, Asphaltic Concrete and Other Asphaltic Surfaces:

1. All materials used shall conform to City of Republic specifications for such use.
2. All pavement is to be saw cut prior to removal. Repairs to streets, driveways, and alleys disturbed by Work in City rights-of-way are to be made as follows:
   a. New pavement shall have a width of at least 12” greater than the trench width. Each repair area in concrete or asphalt streets shall be first cut on each side for the full depth with a concrete saw. The material shall be removed so that no damage occurs to the surrounding pavement. If any damage occurs to the surrounding pavement, then the damaged areas will be removed.
   b. For concrete pavements, the concrete thickness of the repair shall be at least 8” minimum thickness or shall match existing pavement thickness, whichever is greater. Reinforcement shall be placed with #5 bars at 18” o.c., transverse and a minimum of three #4 bars longitudinal. Concrete used for repair shall meet Missouri Standard Specifications for Highway Construction for Pavement Concrete (501.2.2), and shall have a minimum cement content of 6.5 bags per cubic yard, a maximum slump of 4 inches, and a minimum compressive strength of 4000 psi at 28 days. To maintain or improve workability of the concrete material, approved admixtures may be added to the mix. No water shall be added to the mix to increase workability.
   c. For full depth asphaltic concrete pavements, the asphalt thickness of the repair shall be 4” or equal to thickness of existing pavement, or whichever is thicker. Replace the pavement with hot-mix asphalt and compact thoroughly in lifts not to exceed 4 inches each. Hot-mix asphalt shall be of a commercial mix design equivalent to Missouri Standard Specification Type I-C (403.3).
   d. For other asphalt surfaces and base preparation, the thickness shall be a total of at least 10”, consisting of 6” of rolled stone base (MoDOT Type I, or Type 3), compacted to 100% of Maximum Dry Density, and 4” of thoroughly compacted bituminous surfacing layer consisting of an approved commercial asphalt-aggregate mixture (Cold-mix).
   e. The top of all pavement repairs shall be flush with the existing pavement.
   f. Curbs and gutters to be replaced as required to match existing. Curbs and gutters are to be constructed of Concrete (6.5 bag mix).

PART 4 - SEPARATION OF WATER MAINS, SANITARY AND STORM SEWERS

4.01 PARALLEL INSTALLATION

A. Water mains shall be laid at least 10 feet horizontally from any existing or proposed sewer. The distance shall be measured edge to edge.

4.02 CROSSINGS

A. Water mains crossing sewers shall be laid to provide a minimum vertical clear distance of 18" between the outside of the water main and the outside of the sewer. This shall be the case where the water main is either above or below the sewer. At crossings, the full length of water pipe shall be located so both joints will be as far from the sewer as possible.

B. Where 18" of vertical separation cannot be met, the lower utility main shall be encased in concrete, 10 feet in both directions from the crossing creating a 20 feet total length encasement.

4.03 SEWER MANHOLE

A. No waterline shall be located closer than 10 feet to any part of a sewer manhole.

4.04 PROTECTION OF WATER SUPPLIES

A. Cross Connections. There shall be no physical connections between a public or private potable water supply system and a sewer or appurtenance that would permit the passage of any wastewater or polluted water into the potable supply.

B. Relation to Water Works Structures. Sewers shall be laid at least fifty feet (50') in a horizontal direction from any existing or proposed public water supply well or other water supply sources or structures.

4.05 EXCEPTION

A. The Missouri Department of Natural Resources must specifically approve any variance from the requirements of Part 4 of this section, when it is impossible to obtain the specified separation distances. The Engineer shall request any such variance after all other remedies have been evaluated by the Engineer and City

PART 5 - INSURANCE REQUIREMENTS

5.01 WORKER'S COMPENSATION:

A. The coverage must include Employer's Liability with a minimum limit of $1,000,000 for each accident and cover all employees meeting Statutory Limits in compliance with the applicable state and federal laws.

5.02 COMPREHENSIVE GENERAL LIABILITY:

A. Coverage shall have minimum limits of $1,000,000 per Occurrence, Combined Single Limit for Bodily Injury and Property Damage Liability. This shall include: Premises and Operations, Independent Contractors, Products and Completed Operations, Broad Form Property Damage and XCU Coverage, and a Contractual Liability Endorsement.

5.03 BUSINESS AUTO LIABILITY:

A. Coverage shall have minimum limits of $1,000,000 per Occurrence, Combined Single Limit for Bodily Injury and Property Damage Liability, including Owned, Hired, and Non-owned Vehicles and Employee Non-ownership.

5.04 SPECIAL REQUIREMENTS:

A. The City of Republic is to be included as an Additional Insured on the Comprehensive General, Business Auto Liability and Builder's Risk Policies.

B. An appropriate Hold Harmless Clause shall be included.

C. Current, Valid insurance policies meeting the requirements herein identified shall be maintained during the duration of the named project. Renewal certificates or cancellation notices shall be sent to the CITY 30 days prior to any expiration date.

D. It shall be the responsibility of the contractor to ensure that all subcontractors comply with the

same insurance requirements that he is required to meet.

E. Certificates of insurance meeting the required insurance provisions shall be forwarded to the Public Work's Administrative Office.

END OF SECTION 012000

This page was intentionally left blank.

SECTION 221313 – SANITARY SEWERS:

PART 1 - GENERAL

1.01 RELATED DOCUMENTS:

A. Drawings and general provisions of the Contract, including General and Supplementary Conditions and Division 01 Specification Sections, apply to this Section.

B. Related Work Specified Elsewhere:
   1. Site Preparation and Earthwork: SECTION 312050.
   2. Manhole Rim Adjustments: SECTION 330130.86.
   3. Pipe Installation: SECTION 333150.
   4. Utility Valves and Accessories: SECTION 331216.
   5. Television Inspection of Sewers: SECTION 330130.11.

1.02 SUMMARY:

A. This Section includes:
   1. Pipe and fittings.
   2. Non-pressure and pressure couplings.
   3. Expansion joints and deflection fittings.
   4. Backwater valves.
   5. Cleanouts.
   6. Encasement for piping.
   7. Manholes.

1.03 REFERENCES:

A. Applicable Standards (Latest Edition):
   1. ACI International (ACI):
      a. ACI 318 - Building Code Requirements for Structural Concrete and PCA Notes.
      b. ACI 350/350R - Code Requirements for Environmental Engineering Concrete Structures and Commentary.
      c. ACI 350M/350RM - Metric Code Requirements for Environmental Engineering Concrete Structures and Commentary.
   2. American Water Works Association (AWWA):
      a. AWWA C105 - Polyethylene Encasement for Ductile-Iron Pipe Systems.
      b. AWWA C110 - Ductile-Iron and Gray-Iron Fittings for Water.
      c. AWWA C111 - Rubber-Gasket Joints for Ductile-Iron Pressure Pipe and Fittings.
      d. AWWA C151 - Ductile-Iron Pipe, Centrifugally Cast, for Water or Other Liquids.
      e. AWWA C153 - Ductile-Iron Compact Fittings for Water Service.
      f. AWWA C219 - Bolted, Sleeve-Type Couplings for Plain-End Pipe.
      g. AWWA C600 - Installation of Ductile-Iron Water Mains and Their Appurtenances.
      h. AWWA C900 - Polyvinyl Chloride (PVC) Pressure Pipe and Fabricated Fittings, 4 In. through 12 In. (100 mm through 300 mm), for Water Distribution.
      i. AWWA M23 - PVC Pipe - Design and Installation.
      j. AWWA M41 - Ductile-Iron Pipe and Fittings.
   3. ASME International (ASME):
      a. ASME A112.14.1 - Backwater Valves.
      b. ASME A112.36.2M - Cleanouts.
   4. ASTM International (ASTM):
      a. ASTM A48/A48M - Specification for Gray Iron Castings.
      b. ASTM A74 - Specification for Cast Iron Soil Pipe and Fittings.

c. ASTM A185/A185M - Specification for Steel Welded Wire Reinforcement, Plain, for Concrete.
d. ASTM A536 - Specification for Ductile Iron Castings.
e. ASTM A615/A615M - Specification for Deformed and Plain Billet-Steel Bars for Concrete Reinforcement.
f. ASTM A674 - Practice for Polyethylene Encasement for Ductile Iron Pipe for Water or Other Liquids.
g. ASTM A746 - Specification for Ductile Iron Gravity Sewer Pipe.
h. ASTM A888 - Specification for Hubless Cast Iron Soil Pipe and Fittings for Sanitary and Storm Drain, Waste, and Vent Piping Applications.
i. ASTM B29 - Specification for Refined Lead.
j. ASTM C150 - Specification for Portland Cement.
k. ASTM C478 - Specification for Precast Reinforced Concrete Manhole Sections.
l. ASTM C478M - Specification for Precast Reinforced Concrete Manhole Sections .
m. ASTM C564 - Specification for Rubber Gaskets for Cast Iron Soil Pipe and Fittings.
n. ASTM C890 - Practice for Minimum Structural Design Loading for Monolithic or Sectional Precast Concrete Water and Wastewater Structures.
o. ASTM C913-02 - Specification for Precast Concrete Water and Wastewater Structures.
p. ASTM C969-17 – Standard Practice for Infiltration and Exfiltration Acceptance Testing of Installed Precast Concrete Pipe Sewer Lines.
q. ASTM C1173 - Specification for Flexible Transition Couplings for Underground Piping Systems.
r. ASTM C1277 - Specification for Shielded Couplings Joining Hubless Cast Iron Soil Pipe and Fittings.
s. ASTM C1440 - Specification for Thermoplastic Elastomeric (TPE) Gasket Materials for Drain, Waste, and Vent (DWV), Sewer, Sanitary and Storm Plumbing Systems.
t. ASTM C1460 - Specification for Shielded Transition Couplings for Use with Dissimilar DWV Pipe and Fittings above ground.
u. ASTM C1461 - Specification for Mechanical Couplings Using Thermoplastic Elastomeric (TPE) Gaskets for Joining Drain, Waste, and Vent (DWV), Sewer, Sanitary, and Storm Plumbing Systems for above and below Ground Use.
v. ASTM C1540 - Specification for Heavy Duty Shielded Couplings Joining Hubless Cast Iron Soil Pipe and Fittings.
w. ASTM D1785 - Specification for Poly(Vinyl Chloride) (PVC) Plastic Pipe, Schedules 40, 80, and 120.
x. ASTM D2321 - Practice for Underground Installation of Thermoplastic Pipe for Sewers and Other Gravity-Flow Applications.
y. ASTM D2466 - Specification for Poly(Vinyl Chloride) (PVC) Plastic Pipe Fittings, Schedule 40.
z. ASTM D2467 - Specification for Poly(Vinyl Chloride) (PVC) Plastic Pipe Fittings, Schedule 80.
aa. ASTM D2774 - Practice for Underground Installation of Thermoplastic Pressure Piping.
aa. ASTM D2855 - Practice for Making Solvent-Cemented Joints with Poly(Vinyl Chloride) (PVC) Pipe and Fittings.
bb. ASTM D3034 - Specification for Type PSM Poly(Vinyl Chloride) (PVC) Sewer

Pipe and Fittings.

cc. ASTM D3262 - Specification for Fiberglass (Glass-Fiber-Reinforced Thermosetting-Resin) Sewer Pipe.
dd. ASTM D3753 - Specification for Glass-Fiber-Reinforced Polyester Manholes and Wet wells.
ee. ASTM D3839 - Guide for Underground Installation of Fiberglass (Glass-Fiber-Reinforced Thermosetting-Resin) Pipe.
ff. ASTM D3840 - Specification for Fiberglass (Glass-Fiber-Reinforced Thermosetting-Resin) Pipe Fittings for Non-pressure Applications.
gg. ASTM D4101 - Specification for Polypropylene Injection and Extrusion Materials.
hh. ASTM D4161 - Specification for Fiberglass (Glass-Fiber-Reinforced Thermosetting-Resin) Pipe Joints Using Flexible Elastomeric Seals.
ii. ASTM D5926 - Specification for Poly(Vinyl Chloride) (PVC) Gaskets for Drain, Waste, and Vent (DWV), Sewer, Sanitary, and Storm Plumbing Systems.
jj. ASTM F477 - Specification for Elastomeric Seals (Gaskets) for Joining Plastic Pipe.
kk. ASTM F679 - Specification for Poly(Vinyl Chloride) (PVC) Large-Diameter Plastic Gravity Sewer Pipe and Fittings.
ll. ASTM F794 - Specification for Poly(Vinyl Chloride) (PVC) Profile Gravity Sewer Pipe and Fittings Based on Controlled Inside Diameter.
mm. ASTM F891 - Specification for Coextruded Poly(Vinyl Chloride) (PVC) Plastic Pipe with a Cellular Core.
nn. ASTM F949 - Specification for Poly(Vinyl Chloride) (PVC) Corrugated Sewer Pipe with a Smooth Interior and Fittings.
oo. ASTM F1417 11a(2015) - Test Method for Installation Acceptance of Plastic Gravity Sewer Lines Using Low-Pressure Air.
pp. ASTM F1668 - Guide for Construction Procedures for Buried Plastic Pipe.

5. Cast Iron Soil Pipe Institute (CISPI):
   a. CISPI 301 - Specification for Hubless Cast Iron Soil Pipe and Fittings for Sanitary and Storm Drain, Waste, and Vent Piping Applications.
   b. CISPI 310 - Specification for Coupling for Use in Connection with Hubless Cast Iron Soil Pipe and Fittings for Sanitary and Storm Drain, Waste, and Vent Piping Applications.
   c. Cast Iron Soil Pipe and Fittings Handbook, 2002.
6. Uni-Bell PVC Pipe Association (UNI):
   a. UNI-B-6 - Recommended Practice for Low-Pressure Air Testing of Installed Sewer Pipe.

1.04 A. DEFINITIONS:
FRP: Fiberglass-reinforced plastic.

1.05 A. ACTION SUBMITTALS:
Product Data: For the following:
1. Expansion joints and deflection fittings.
2. Backwater valves.

B. Shop Drawings: For manholes. Include plans, elevations, sections, details, and frames and covers.

SECTION 221313 – SANITARY SEWERS: continued

1.06 INFORMATIONAL SUBMITTALS:

A. Coordination Drawings: Show pipe sizes, locations, and elevations. Show other piping in same trench and clearances from sewer system piping. Indicate interface and spatial relationship between manholes, piping, and proximate structures.

B. Profile Drawings: Show system piping in elevation. Draw profiles to horizontal scale of not less than 1-inch equals 50 feet (1:600) and to vertical scale of not less than 1-inch equals 5 feet (1:60). Indicate manholes and piping. Show types, sizes, materials, and elevations of other utilities crossing system piping.

C. Product Certificates: For each type of cast-iron soil pipe and fitting, from manufacturer.

D. Field quality-control reports.

1.07 DELIVERY, STORAGE, AND HANDLING:

A. Do not store plastic manholes, pipe, and fittings in direct sunlight.

B. Protect pipe, pipe fittings, and seals from dirt and damage.

C. Handle manholes according to manufacturer's written rigging instructions.

1.08 PROJECT CONDITIONS:

A. Interruption of Existing Sanitary Sewerage Service: Do not interrupt service to facilities occupied by the City or others, unless permitted under the following conditions and then only after arranging to provide temporary service according to requirements indicated:

1. Notify the City no fewer than one week in advance of proposed interruption of service.
2. Do not proceed with interruption of service without the City's written permission.

PART 2 - PRODUCTS

2.01 HUB-AND-SPIGOT, CAST-IRON SOIL PIPE AND FITTINGS:

A. Pipe and Fittings: ASTM A74.

B. Gaskets: ASTM C564, rubber.

C. Calking Materials: ASTM B29, pure lead and oakum or hemp fiber.

2.02 HUBLESS CAST-IRON SOIL PIPE AND FITTINGS:

A. Pipe and Fittings: ASTM A888 or CISPI 301.

B. CISPI-Trademark, Shielded Couplings:

1. Manufacturers: Subject to compliance with requirements, provide products by one of the following:
   a. ANACO-Husky.
   b. Dallas Specialty & Mfg. Co.
   c. Mission Rubber Company; a division of MCP Industries, Inc.
   d. Stant; a Tompkins company.
   e. Tyler Pipe.
   f. Engineer-approved equal.
2. Description: ASTM C1277 and CISPI 310, with stainless-steel corrugated shield; stainless-steel bands and tightening devices; and ASTM C564, rubber sleeve with integral, center pipe stop.

C. Heavy-Duty, Shielded Couplings:

1. Manufacturers: Subject to compliance with requirements, provide products by one of the following:
   a. ANACO-Husky.
   b. Clamp-All Corp.
   c. Dallas Specialty & Mfg. Co.

d. Mission Rubber Company; a division of MCP Industries, Inc.
e. Stant; a Tompkins company.
f. Tyler Pipe.
g. Engineer-approved equal.

2. Description: ASTM C1277 and ASTM C1540, with stainless-steel shield; stainless-steel bands and tightening devices; and ASTM C564, rubber sleeve with integral, center pipe stop.

D. Cast-Iron, Shielded Couplings:
1. Manufacturers: Subject to compliance with requirements, provide products by one of the following:
a. MG Piping Products Company.
b. Engineer-approved equal.
2. Description: ASTM C1277 with ASTM A48/A48M, two-piece, cast-iron housing; stainless-steel bolts and nuts; and ASTM C564, rubber sleeve with integral, center pipe stop.

E. Unshielded Couplings:
1. Manufacturers: Subject to compliance with requirements, provide products by one of the following:
a. ANACO-Husky.
b. Engineer-approved equal.
2. Description: ASTM C1277 and ASTM C1461, rigid, sleeve-type, reducing- or transition-type mechanical coupling, with integral, center pipe stop, molded from ASTM C1440, TPE material; with corrosion-resistant-metal tension band and tightening mechanism on each end.

2.03 DUCTILE-IRON, GRAVITY SEWER PIPE AND FITTINGS:

A. Pipe: ASTM A746, for push-on joints.
B. Standard Fittings: AWWA C110, ductile or gray iron, for push-on joints.
C. Compact Fittings: AWWA C153, ductile iron, for push-on joints.
D. Gaskets: AWWA C111, rubber.

2.04 DUCTILE-IRON, PRESSURE PIPE AND FITTINGS:

A. Push-on-Joint Piping:
1. Pipe: AWWA C151.
2. Standard Fittings: AWWA C110, ductile or gray iron.
3. Compact Fittings: AWWA C153.
4. Gaskets: AWWA C111, rubber, of shape matching pipe and fittings.

B. Mechanical-Joint Piping:
1. Pipe: AWWA C151, with bolt holes in bell.
2. Standard Fittings: AWWA C110, ductile or gray iron, with bolt holes in bell.
3. Compact Fittings: AWWA C153, with bolt holes in bells.
4. Glands: Cast or ductile iron; with bolt holes and high-strength, cast-iron or high-strength, low-alloy steel bolts and nuts.
5. Gaskets: AWWA C111, rubber, of shape matching pipe, fittings, and glands.

2.05 PVC PIPE AND FITTINGS:

A. PVC Cellular-Core Sewer Piping:
1. Pipe: ASTM F891, Sewer and Drain Series, PS 50 minimum stiffness, PVC cellular-core pipe with plain ends for solvent-cemented joints.
2. Fittings: ASTM D3034, SDR 35, PVC socket-type fittings.

B. PVC Corrugated Sewer Piping:
   1. Pipe: ASTM F949, PVC corrugated pipe with bell-and-spigot ends for gasketed joints.
   2. Fittings: ASTM F949, PVC molded or fabricated, socket type.
   3. Gaskets: ASTM F477, elastomeric seals.

C. PVC Profile Sewer Piping:
   1. Pipe: ASTM F794, PVC profile, gravity sewer pipe with bell-and-spigot ends for gasketed joints.
   2. Fittings: ASTM D3034, PVC with bell ends.
   3. Gaskets: ASTM F477, elastomeric seals.

D. PVC Type PSM Sewer Piping:
   1. Pipe: ASTM D3034, SDR 35, PVC Type PSM sewer pipe with bell-and-spigot ends for gasketed joints.
   2. Fittings: ASTM D3034, PVC with bell ends.
   3. Gaskets: ASTM F477, elastomeric seals.

E. PVC Gravity Sewer Piping:
   1. Pipe and Fittings: ASTM F679, PVC gravity sewer pipe with bell-and-spigot ends and with integral ASTM F477, elastomeric seals for gasketed joints.

F. PVC Pressure Piping:
   1. Pipe: AWWA C900, Class 200 PVC pipe with bell-and-spigot ends for gasketed joints.
   2. Fittings: AWWA C900, Class 200 PVC pipe with bell ends.
   3. Gaskets: ASTM F477, elastomeric seals.

G. PVC Water-Service Piping:
   1. Pipe: ASTM D1785, Schedule 80 PVC, with plain ends for solvent-cemented joints.
   2. Fittings: ASTM D2467, Schedule 80 PVC, socket type.

2.06 NONPRESSURE-TYPE TRANSITION COUPLINGS:

A. Comply with ASTM C1173, elastomeric, sleeve-type, reducing or transition coupling, for joining underground non-pressure piping. Include ends of same sizes as piping to be joined and corrosion-resistant-metal tension band and tightening mechanism on each end.

B. Sleeve Materials:
   1. For Cast-Iron Soil Pipes: ASTM C564, rubber.
   2. For Fiberglass Pipes: ASTM F477, elastomeric seal or ASTM D5926, PVC.
   3. For Plastic Pipes: ASTM F477, elastomeric seal or ASTM D5926, PVC.
   4. For Dissimilar Pipes: ASTM D5926, PVC or other material compatible with pipe materials being joined.

C. Unshielded, Flexible Couplings:
   1. Manufacturers: Subject to compliance with requirements, provide products by one of the following:
      a. Dallas Specialty & Mfg. Co.
      b. Logan Clay Pipe.
      c. Mission Rubber Company; a division of MCP Industries, Inc.
      d. NDS.
      e. Plastic Oddities; a division of Diverse Corporate Technologies, Inc.
      f. Engineer-approved equal.
   2. Description: Elastomeric sleeve with stainless-steel shear ring and corrosion-resistant-metal tension band and tightening mechanism on each end.

D. Shielded, Flexible Couplings:
   1. Manufacturers: Subject to compliance with requirements, provide products by one of the following:
      a. Cascade Waterworks Mfg.
      b. Dallas Specialty & Mfg. Co.
      c. Mission Rubber Company; a division of MCP Industries, Inc.
      d. Engineer-approved equal.
   2. Description: ASTM C1460, elastomeric or rubber sleeve with full-length, corrosion-resistant outer shield and corrosion-resistant-metal tension band and tightening mechanism on each end.
   3. Shielded couplings are only allowed on 4-inch pipe.

E. Ring-Type, Flexible Couplings:
   1. Manufacturers: Subject to compliance with requirements, provide products by one of the following:
      a. Logan Clay Pipe.
      b. Mission Rubber Company; a division of MCP Industries, Inc.
      c. Engineer-approved equal.
   2. Description: Elastomeric compression seal with dimensions to fit inside bell of larger pipe and for spigot of smaller pipe to fit inside ring.

F. Nonpressure-Type, Rigid Couplings:
   1. Manufacturers: Subject to compliance with requirements, provide products by one of the following:
      a. ANACO-Husky.
      b. Engineer-approved equal.
   2. Description: ASTM C1461, sleeve-type, reducing- or transition-type mechanical coupling, molded from ASTM C1440, TPE material; with corrosion-resistant-metal tension band and tightening mechanism on each end.

2.07 PRESSURE-TYPE PIPE COUPLINGS:

A. Manufacturers: Subject to compliance with requirements, provide products by one of the following:
   1. Cascade Waterworks Mfg.
   2. Dresser, Inc.
   3. Ford Meter Box Company, Inc. (The); Pipe Products Div.
   4. JCM Industries, Inc.
   5. Romac Industries, Inc.
   6. Smith-Blair, Inc.; a Sensus company.
   7. Viking Johnson.
   8. Engineer-approved equal.

B. Tubular-Sleeve Couplings: AWWA C219, with center sleeve, gaskets, end rings, and bolt fasteners.

C. Metal, bolted, sleeve-type, reducing or transition coupling, for joining underground pressure piping. Include 200-psig minimum pressure rating and ends of same sizes as piping to be joined.

D. Center-Sleeve Material: Manufacturer's standard.

E. Gasket Material: Natural or synthetic rubber.

F. Metal Component Finish: Corrosion-resistant coating or material.

2.08 EXPANSION JOINTS AND DEFLECTION FITTINGS:

A. Ductile-Iron, Flexible Expansion Joints:
   1. Manufacturers: Subject to compliance with requirements, provide products by one of the following:
      a. EBAA Iron, Inc.
      b. Romac Industries, Inc.
      c. Star Pipe Products.
      d. Engineer-approved equal.
   2. Description: Compound fitting with combination of flanged and mechanical-joint ends complying with AWWA C110 or AWWA C153. Include two gasketed ball-joint sections and one or more gasketed sleeve sections, rated for 250-psig minimum working pressure and for offset and expansion indicated.

B. Ductile-Iron Expansion Joints:
   1. Manufacturers: Subject to compliance with requirements, provide products by one of the following:
      a. Dresser, Inc.
      b. EBAA Iron, Inc.
      c. JCM Industries, Inc.
      d. Smith-Blair, Inc.; a Sensus company.
      e. Engineer-approved equal.
   2. Description: Three-piece assembly of telescoping sleeve with gaskets and restrained-type, ductile-iron, bell-and-spigot end sections complying with AWWA C110 or AWWA C153. Include rating for 250-psig minimum working pressure and for expansion indicated.

C. Ductile-Iron Deflection Fittings:
   1. Manufacturers: Subject to compliance with requirements, provide products by one of the following:
      a. EBAA Iron, Inc.
      b. Engineer-approved equal.
   2. Description: Compound coupling fitting with ball joint, flexing section, gaskets, and restrained-joint ends complying with AWWA C110 or AWWA C153. Include rating for 250-psig minimum working pressure and for up to 15 degrees of deflection.

2.09 BACKWATER VALVES:

A. PVC Backwater Valves:
   1. Manufacturers: Subject to compliance with requirements, provide products by one of the following:
      a. Rectorseal Clean Check Extendable Backwater Valve
      b. Engineer-approved equal.
   2. See Detail #26 for Backwater Valve detail.
   3. Description: Horizontal type; with PVC body, PVC removable cover, and PVC swing check valve.

2.10 CLEANOUTS:

A. Cast-Iron Cleanouts:
   1. Manufacturers: Subject to compliance with requirements, provide products by one of the following:
      a. Josam Company.

b. MIFAB, Inc.
c. Smith, Jay R. Mfg. Co.
d. Tyler Pipe.
e. Watts Water Technologies, Inc.
f. Zurn Specification Drainage Operation; Zurn Plumbing Products Group.
g. Engineer-approved equal.

2. Description: ASME A112.36.2M, round, gray-iron housing with clamping device and round, secured, scoriated, gray-iron cover. Include gray-iron ferrule with inside calk or spigot connection and countersunk, tapered-thread, brass closure plug.
3. Top-Loading Classifications: Light Duty, Medium Duty, Heavy Duty, and Extra-Heavy Duty. If more than one loading classification is required, show location on each on drawings.
4. Sewer Pipe Fitting and Riser to Cleanout: ASTM A74, Service class, cast-iron soil pipe and fittings.

B. PVC Cleanouts:
1. Manufacturers: Subject to compliance with requirements, provide products by one of the following:
a. eCanplas, LLC.
b. IPS Corporation.
c. NDS.
d. Plastic Oddities; a division of Diverse Corporate Technologies, Inc.
e. Sioux Chief Manufacturing Company, Inc.
f. Zurn Light Commercial Products Operation; Zurn Plumbing Products Group.
g. Engineer-approved equal.
2. Description: PVC body with PVC threaded plug. Include PVC sewer pipe fitting and riser to clean out of same material as sewer piping.

2.11 ENCASEMENT FOR PIPING:

A. Standard: ASTM A674 or AWWA C105.
B. Material: Linear low-density polyethylene film of 0.008-inch or high-density, cross-laminated polyethylene film of 0.004-inch minimum thickness.
C. Form: Sheet or tube.
D. Color: Black or natural.

2.12 MANHOLES:

A. Standard Precast Concrete Manholes:
1. Description: ASTM C478 (ASTM C478M), precast, reinforced concrete, of depth indicated, with provision for sealant joints.
2. Diameter: 48 inches minimum, unless otherwise indicated.
3. Ballast: Increase thickness of precast concrete sections or add concrete to base section, as required to prevent flotation.
4. Base Section: 6-inch minimum thickness for floor slab and 4 inch (100 mm) minimum thickness for walls and base riser section; with separate base slab or base section with integral floor.
5. Riser Sections: 4-inch minimum thickness of length to provide depth indicated.
6. Top Section: Eccentric-cone type, unless concentric-cone or flat-slab-top type is indicated; with top of cone of size that matches grade rings.
7. Joint Sealant: ASTM C990 (ASTM C990M), bitumen or butyl rubber.
8. Resilient Pipe Connectors: ASTM C923 (ASTM C923M), cast or fitted into manhole walls, for each pipe connection.

9. For Manhole Rim Adjustments see SECTION 330130.86

B. Designed Precast Concrete Manholes:
   1. Description: ASTM C913; designed according to ASTM C890 for A-16 (ASSHTO HS20-44), heavy-traffic, structural loading; of depth, shape, and dimensions indicated, with provision for sealant joints.
   2. Ballast: Increase thickness of one or more precast concrete sections or add concrete to manhole as required to prevent flotation.
   3. Joint Sealant: ASTM C990 (ASTM 990M), bitumen or butyl rubber.
   4. Resilient Pipe Connectors: ASTM C923 (ASTM C923M), cast or fitted into manhole walls, for each pipe connection.
   5. For Manhole Rim Adjustments see SECTION 330130.86

C. Fiberglass Manholes:
   1. Manufacturers: Subject to compliance with requirements, provide products by one of the following:
      a. Associated Fiberglass Enterprises.
      b. Containment Solutions, Inc.
      c. L. F. Manufacturing, Inc.
      d. Engineer-approved equal.
   2. Description: ASTM D3753.
   3. Diameter: 48 inches minimum, unless otherwise indicated.
   4. Ballast: Increase thickness of concrete base as required to prevent flotation.
   5. Base Section: Concrete, 6-inch minimum thickness.
   6. Resilient Pipe Connectors: ASTM C923 (ASTM C923M), cast or fitted into manhole walls, for each pipe connection.

D. Manhole Frames and Covers:
   1. Description: Ferrous; 24-inch ID by 7- to 9-inch riser, with 4-inch minimum-width flange and 26-inch diameter cover. Include indented top design with lettering cast into cover, using wording equivalent to "SANITARY SEWER."
   2. Material: ASTM A536, Grade 60-40-18 ductile iron, unless otherwise indicated.

E. Manhole-Cover Inserts:
   1. Manufacturers: Subject to compliance with requirements, provide products by one of the following:
      a. FRW Industries; a Syneco Systems, Inc. company.
      b. Knutson Enterprises.
      c. L. F. Manufacturing, Inc.
      d. Parson Environmental Products, Inc.
      e. Engineer-approved equal.
   2. Description; Manufactured, plastic form, of size to fit between manhole frame and cover and designed to prevent stormwater inflow. Include handle for removal and gasket for gastight sealing.
   3. Type: Solid.

2.13 CONCRETE:

A. General: Cast-in-place concrete complying with ACI 318, ACI 350/350R, and the following:
   1. Cement: ASTM C150, Type II.
   2. Fine Aggregate: ASTM C33, sand.
   3. Coarse Aggregate: ASTM C33, crushed gravel.
   4. Water: Potable.

SECTION 221313 – SANITARY SEWERS: continued

B. Portland Cement Design Mix: 4,000 psi minimum, with 0.45 maximum water/cementitious materials ratio.
   1. Reinforcing Fabric: ASTM A185, steel, welded wire fabric, plain.
   2. Reinforcing Bars: ASTM A615, Grade 60 deformed steel.

C. Manhole Channels and Benches: Factory or field formed from concrete. Portland cement design mix, 4,000 psi minimum, with 0.45 maximum water/cementitious materials ratio. Include channels and benches in manholes.
   1. Channels: Concrete invert, formed to same width as connected piping, with height of vertical sides to three-fourths of pipe diameter. Form curved channels with smooth, uniform radius and slope.
   2. Invert Slope: 2% through manhole, unless otherwise approved by the City.
   3. Benches: Concrete, sloped to drain into channel.
      a. Slope: 4%, unless otherwise approved by the City.
      b. No sewer, service connection, or drop manhole shall discharge onto the surface of the bench.

D. Ballast and Pipe Supports: Portland cement design mix, 3,000 psi minimum, with 0.58 maximum water/cementitious materials ratio.
   1. Reinforcing Fabric: ASTM A185, steel, welded wire fabric, plain.
   2. Reinforcing Bars: ASTM A615, Grade 60 deformed steel.

PART 3 - EXECUTION

3.01 EARTHWORK:

A. Excavating, trenching, and backfilling are specified in Division 31.

3.02 PIPING INSTALLATION:

A. General Locations and Arrangements: Drawing plans and details indicate general location and arrangement of underground sanitary sewer piping. Location and arrangement of piping layout take into account design considerations. Install piping as indicated, to extent practical. Where specific installation is not indicated, follow piping manufacturer's written instructions.

B. Install piping beginning at low point, true to grades and alignment indicated with unbroken continuity of invert. Place bell ends of piping facing upstream. Install gaskets, seals, sleeves, and couplings according to manufacturer's written instructions for using lubricants, cements, and other installation requirements.

C. Location. Manholes shall be installed –
   1. At the end of each line;
   2. At all changes in grade, size or alignment;
   3. At all sewer pipe intersections; and
   4. At distances appropriate for sufficient cleaning and maintenance of sewer lines.

D. Install proper size increasers, reducers, and couplings where different sizes or materials of pipes and fittings are connected. Reducing size of piping in direction of flow is prohibited.

E. When installing pipe under streets or other obstructions that cannot be disturbed, use pipe-jacking process of micro tunneling.

F. Design and install gravity-flow, nonpressure, drainage piping according to the following:
   1. Slope. All sewers shall be designed and constructed to give mean velocities, when flowing full, of not less than two feet (2') per second.
   2. Install piping with restrained joints at tee fittings and at changes in direction. Use corrosion-resistant rods, pipe or fitting manufacturer's proprietary restraint system, or cast-in-place-concrete supports or anchors.

3. All sewers shall either have minimum cover of thirty-six inches (36-inches), or sufficiently insulated with other material such as concrete encasement to prevent freezing and to protect them from superimposed loads.
4. Heavier weight pipe is required when at depths of 9 feet or greater.
5. Install hub-and-spigot, cast-iron soil piping according to CISPI's "Cast Iron Soil Pipe and Fittings Handbook."
6. Install hubless cast-iron soil piping according to CISPI 310 and CISPI's "Cast Iron Soil Pipe and Fittings Handbook."
7. Install ductile-iron, gravity sewer piping according to ASTM A746.
8. Install PVC cellular-core sewer piping according to ASTM D2321 and ASTM F1668.
9. Install PVC corrugated sewer piping according to ASTM D2321 and ASTM F1668.
10. Install PVC profile sewer piping according to ASTM D2321 and ASTM F1668.
11. Install PVC Type PSM sewer piping according to ASTM D2321 and ASTM F1668.
12. Install PVC gravity sewer piping according to ASTM D2321 and ASTM F1668.
13. Install fiberglass sewer piping according to ASTM D3839 and ASTM F1668.

G. Install force-main, pressure piping according to the following:
1. Install piping with restrained joints at tee fittings and at horizontal and vertical changes in direction. Use corrosion-resistant rods, pipe or fitting manufacturer's proprietary restraint system, or cast-in-place-concrete supports or anchors.
2. Install piping with 42-inch minimum cover.
3. Install ductile-iron pressure piping according to AWWA C600 or AWWA M41.
4. Install ductile-iron special fittings according to AWWA C600.
5. Install PVC pressure piping according to AWWA M23 or to ASTM D2774 and ASTM F1668.
6. Install PVC water-service piping according to ASTM D2774 and ASTM F1668.

H. Install corrosion-protection piping encasement over the following underground metal piping according to ASTM A674 or AWWA C105:
1. Hub-and-spigot, cast-iron soil pipe.
2. Hubless cast-iron soil pipe and fittings.
3. Ductile-iron pipe and fittings.
4. Expansion joints and deflection fittings.

I. Clear interior of piping and manholes of dirt and superfluous material as work progresses. Maintain swab or drag in piping and pull past each joint as it is completed. Place plug in end of incomplete piping at end of day and when work stops.

3.03 PIPE JOINT CONSTRUCTION:

A. Join gravity-flow, nonpressure, drainage piping according to the following:
1. Join hub-and-spigot, cast-iron soil piping with gasket joints according to CISPI's "Cast Iron Soil Pipe and Fittings Handbook" for compression joints.
2. Join hub-and-spigot, cast-iron soil piping with calked joints according to CISPI's "Cast Iron Soil Pipe and Fittings Handbook" for lead and oakum calked joints.
3. Join hubless cast-iron soil piping according to CISPI 310 and CISPI's "Cast Iron Soil Pipe and Fittings Handbook" for hubless-coupling joints.
4. Join ductile-iron, gravity sewer piping according to AWWA C600 for push-on joints.
5. Join PVC cellular-core sewer piping according to ASTM D2321 and ASTM F891 for solvent-cemented joints.
6. Join PVC corrugated sewer piping according to ASTM D2321.
7. Join PVC profile sewer piping according to ASTM D2321 for elastomeric-seal joints or ASTM F794 for gasketed joints.
8. Join PVC Type PSM sewer piping according to ASTM D2321 and ASTM D3034 for

elastomeric-seal joints or ASTM D3034 for elastomeric-gasket joints.

9. Join PVC gravity sewer piping according to ASTM D2321 and ASTM D3034 for elastomeric-seal joints or ASTM D3034 for elastomeric-gasket joints.
10. Join fiberglass sewer piping according to ASTM D4161 for elastomeric-seal joints.
11. Join dissimilar pipe materials with nonpressure-type, rigid couplings.

B. Join force-main, pressure piping according to the following:
1. Join ductile-iron pressure piping according to AWWA C600 or AWWA M41 for push-on joints.
2. Join ductile-iron special fittings according to AWWA C600 or AWWA M41 for push-on joints.
3. Join PVC pressure piping according to AWWA M23 for gasketed joints.
4. Join PVC water-service piping according to ASTM D2855.
5. Join dissimilar pipe materials with pressure-type couplings.

C. Pipe couplings, expansion joints, and deflection fittings with pressure ratings at least equal to piping rating may be used in applications below, unless otherwise indicated.
1. Use nonpressure flexible couplings where required to join gravity-flow, nonpressure sewer piping, unless otherwise indicated.
a. Shielded rigid couplings for pipes of same or slightly different OD.
b. Unshielded, increaser/reducer-pattern, rigid couplings for pipes with different OD.
c. Ring-type flexible couplings for piping of different sizes where annular space between smaller piping's OD and larger piping's ID permits installation.
2. Use pressure pipe couplings for force-main joints.

3.04 MANHOLE INSTALLATION:

A. General: Install manholes complete with appurtenances and accessories indicated.
B. Install precast concrete manhole sections with sealants according to ASTM C891.
C. Install FRP manholes according to manufacturer's written instructions.
D. Form continuous concrete channels and benches between inlets and outlet.
E. Install manhole-cover inserts in frame and immediately below cover.

3.05 BACKWATER VALVE INSTALLATION:

A. Install horizontal-type backwater valves in piping manholes or pits.
B. Install combination horizontal and manual gate valves in piping and in manholes.
C. Install terminal-type backwater valves on end of piping and in manholes. Secure units to sidewalls.

3.06 CLEANOUT INSTALLATION:

A. Install cleanouts and riser extensions from sewer pipes to cleanouts at grade. Use cast-iron soil pipe fittings in sewer pipes at branches for cleanouts and use cast-iron soil pipe for riser extensions to cleanouts. Install piping so cleanouts open in direction of flow in sewer pipe.
1. Use Light-Duty, top-loading classification cleanouts in earth or unpaved foot-traffic areas.
2. Use Medium-Duty, top-loading classification cleanouts in paved foot-traffic areas.
3. Use Heavy-Duty, top-loading classification cleanouts in vehicle-traffic service areas.
4. Use Extra-Heavy-Duty, top-loading classification cleanouts in roads.

B. Set cleanout frames and covers in earth in cast-in-place-concrete block, 18 by 18 by 12 inches deep. Set with tops 1 inch above surrounding grade.
C. Set cleanout frames and covers in concrete pavement and roads with tops flush with pavement surface.

3.07 SEWER SERVICE CONNECTIONS:

A. See Standard Detail #16 for Sewer Service Connection Detail.

B. All service connections to the sewer main shall be watertight and cannot protrude into the sewer. This will be required for all new construction, in addition to existing service connections being replaced or repaired.

3.08 SEWER MAIN SPOT REPAIRS:

A. Contractor shall use HYMAX style coupling only when within 15 feet of the installation of a new manhole on existing sewer main. If distance is further than 15 feet from installation of a new manhole on existing main, either HYMAX style coupling or a rigid (PVC) knock-on coupling may be used.

3.09 CLOSING ABANDONED SANITARY SEWER SYSTEMS:

A. Abandoned Piping: Close open ends of abandoned underground piping indicated to remain in place. Include closures strong enough to withstand hydrostatic and earth pressures that may result after ends of abandoned piping have been closed. Use either procedure below:
   1. Close open ends of piping with at least 8-inch thick, brick masonry bulkheads.
   2. Close open ends of piping with threaded metal caps, plastic plugs, or other acceptable methods suitable for size and type of material being closed. Do not use wood plugs.

B. Abandoned Manholes: Excavate around manhole as required and use either procedure below:
   1. Remove manhole and close open ends of remaining piping.
   2. Remove top of manhole down to at least 36 inches below final grade. Fill to within 12 inches of top with stone, rubble, gravel, or compacted dirt. Fill to top with concrete.

C. Backfill to grade according to Division 31.

3.10 IDENTIFICATION:

A. Materials and their installation are specified in Division 31. Arrange for installation of green warning tapes directly over piping and at outside edges of underground manholes.
   1. Use detectable warning tape over ferrous piping.
   2. Use detectable warning tape over nonferrous piping and over edges of underground manholes.

3.11 FIELD QUALITY CONTROL:

A. Inspect interior of piping to determine whether line displacement or other damage has occurred. Inspect after approximately 24 inches of backfill is in place, and again at completion of Project.
   1. Submit separate report for each system inspection.
   2. Defects requiring correction include the following:
      a. Alignment: Less than full diameter of inside of pipe is visible between structures.
      b. Deflection: No pipe shall exceed a deflection of five percent (5%) of the inside pipe diameter.
      c. Damage: Crushed, broken, cracked, or otherwise damaged piping.
      d. Infiltration: Water leakage into piping.
      e. Exfiltration: Water leakage from or around piping per ASCM C969–17.
   3. Replace defective piping using new materials, and repeat inspections until defects are within allowances specified.
   4. Reinspect and repeat procedure until results are satisfactory.

B. Test new piping systems, and parts of existing systems that have been altered, extended, or repaired, for leaks and defects.
   1. Do not enclose, cover, or put into service before inspection and approval.

2. Test completed piping systems according to requirements of authorities having jurisdiction.
3. Schedule tests and inspections by authorities having jurisdiction with at least 24 hours' advance notice.
4. Submit separate report for each test.CCTV: CCTV is acceptable for quality control.
   a. Refer to SECTION 330130.11.
   b. Review of the CCTV and discretion of defects requiring repair based on NASSCO's PACP to be determined by the City.
5. Force Main: Perform hydrostatic test after thrust blocks, supports, and anchors have hardened. Test at pressure not less than 1-1/2 times the maximum system operating pressure, but not less than 150 psig.
   a. Ductile-Iron Piping: Test according to AWWA C600, "Hydraulic Testing" Section.
   b. PVC Piping: Test according to AWWA M23, "Testing and Maintenance" Chapter.
6. Manhole , Inspection and Testing:
   a. Exfiltration testing for concrete sewer manholes, shall conform to test procedures in ASTM C969 – 17 Standard Practice for Infiltration and Exfiltration Acceptance Testing of Installed Precast Concrete Pipe Sewer Lines.
   b. Vacuum testing for concrete sewer manholes, shall conform to the test procedures in ASTM C1244 – 11(2017) Standard Test Method for Concrete Sewer Manholes by the Negative Air Pressure (Vacuum) Test Prior to Backfill.

C. Leaks and loss in test pressure constitute defects that must be repaired.
D. Replace leaking piping using new materials, and repeat testing until leakage is within allowances specified.

3.12 CLEANING:

A. Clean dirt and superfluous material from interior of piping.

3.13 ALTERNATIVE EFFLUENT SEWER SYSTEMS:

A. Alternative sewer systems shall not to be used in lieu of conventional gravity sewers but may be acceptable when it can be shown in the engineering report that it is not feasible to provide conventional gravity sewers. This will be designed in conjunction with the approval of Greene County and DNR standards and requirements.
B. The continuing authority must be responsible for the operation and maintenance and modernization of an alternative sewer system collection system.
C. Flood protection shall apply to new construction and to existing facilities undergoing major modification. The wastewater facility structures, electrical equipment, and mechanical equipment shall be protected from physical damage by not less than the one hundred- (100) year flood elevation.
D. Facilities shall be readily accessible by authorized personnel from a public right-of-way at all times.
E. Fencing is required around facility siters to discourage entrance by unauthorized people.
F. A 50' distance must be maintained between potable water sources and wastewater pumping stations.
G. Sewers shall be laid at least fifty feet (50') in a horizontal direction from any existing or proposed public water supply well or other water supply sources or structures.
H. There shall be no physical connections between a public or private potable water supply system and a sewer or appurtenance that would permit the passage of any wastewater or polluted water into the potable supply.
I. Pressure Sewers

1. Design shall be based on the most probable number of pumping units expected to operate simultaneously or on some other acceptable method of computing the peak pumpage rate.
2. A cleansing velocity of at least two feet per second (2 ft/s), at least once per day shall be achieved.
3. The minimum diameter sewer main pipe shall not be less than one and a half inches (1.5").
4. The manufacturer's recommended hydrostatic pressure testing procedures must be followed.
5. Locator wire must be utilized when sewer lines are installed within the public right-of-way.

J. Sewer Appurtenances
1. Appurtenances shall be compatible with the piping system and full bore with smooth interior surfaces to eliminate obstruction and keep friction loss to a minimum.

K. Isolation Valves
1. Isolation valves shall be comprised of resilient seated gate valve or ball valve with a position indicator.
2. Must be constructed from corrosion resistant materials.
3. Must be enclosed in a watertight and lockable valve box.
4. Isolation valves shall be installed on the upstream side of major pipe intersections; both sides of stream, bridge, and railroad crossings, and unstable soil; and the terminal end of the system to facilitate future extensions.
5. Proper support shall be provided for valves so the weight of the valve is not carried by the pipe.

L. Service line connections must have a minimum diameter of 1.25".

M. Grinder Pump Stations
1. Simplex grinder pump station shall not serve multiple equivalent dwelling units if owned, operated, and maintained by individual homeowners; and shall not serve commercial facilities.
2. Multiple unit grinder pump stations must be owned, operated, and maintained by an approved continuing authority.
3. Grinder pump vaults shall be watertight.
4. A grinder pump vault shall have a storage volume of at least seventy (70) gallons.
5. The grinder pump vault must contain a shutoff valve accessible from the ground surface, a check valve to prevent backflow, and an anti-siphon valve.
6. When the continuing authority operates and maintains the grinder pump stations, provisions must be made for periods of mechanical or power failure.
7. The design and electrical requirements for submersible pump stations shall apply.
8. Water level controls must be accessible without entering the wet well.
9. Duplex pumps shall be provided where the design flow from the EDUs, or other, is one thousand five hundred (1,500) gallons per day or greater.

N. Septic Tank Effluent Pumped (STEP) Sewers
1. The design requirements of pressure sewers shall be applicable.
2. Provide at least one (1) septic tank to serve each EDU.
3. Provide at least one thousand (1,000) gallons capacity.
4. Provide twenty percent (20%) of the septic tank volume for freeboard and ventilation.
5. Existing septic tanks being proposed for reuse must be inspected and verified to be watertight.

O. Septic Tank Effluent Gravity (STEG) Sewers
1. The minimum diameter of sewer main pipe shall not be less than four inches (4").
2. The minimum diameter of sewer service lines shall not be less than four inches (4").
3. Leakage tests shall be required unless the gravity sewer has a diameter of 27" or less and is

constructed of PVC.

4. The requirements of 221313 3.13 N.1-N.5 shall apply.

P. A pressure sewer system discharging to a downstream STEP or STEG sewer system shall not be permitted.

END OF SECTION 221313

This page was intentionally left blank.

SECTION 312050 – SITE PREPARATION AND EARTHWORK:

PART 1 - GENERAL

1.01 RELATED DOCUMENTS:

A. Drawings and general provisions of the Contract, including General and Supplementary Conditions and Division 01 Specification Sections, apply to this Section.

1.02 SUMMARY:

A. This Section includes:

1. All subgrade preparation.
2. Excavating.
3. Trenching.
4. Filling.
5. Embankment construction.
6. Backfilling including controlled low-strength material (CLSM).
7. Compacting.
8. Grading.
9. Riprapping.
10. Topsoiling.
11. All related items necessary to complete the Work indicated or specified.

1.03 RELATED REQUIREMENTS:

A. 329200 – Seeding and Sodding

1.04 REFERENCE STANDARDS:

A. Applicable Standards:

1. ASTM International (ASTM):
    a. ASTM C33/C33M – Standard Specification for Concrete Aggregates.
    b. ASTM C88 – Standard Test Method for Soundness of Aggregates by Use of Sodium Sulfate or Magnesium Sulfate.
    c. ASTM C94/C94M – Standard Specification for Ready-Mix Concrete.
    d. ASTM C144 – Standards Specification for Aggregate for Masonry Mortar.
    e. ASTM C150/C150M – Standard Specification for Portland Cement.
    f. ASTM C173/C173M – Standard Test Method for Air Content of Freshly Mixed Concrete by the Volumetric Method.
    g. ASTM C231/C231M – Standard Test Method for Air Content of Freshly Mixed Concrete by the Pressure Method.
    h. ASTM C403/C403M – Standard Test Method for Time of Setting of Concrete Mixtures by Penetration Resistance.
    i. ASTM C618 – Standard Specification for Coal Fly Ash and Raw or Calcined Natural Pozzolan for Use in Concrete.
    j. ASTM C939/C939M – Standard Test Method for Flow of Grout for Preplaced-Aggregate Concrete (Flow Cone Method).
    k. ASTM C940 – Standard Test Method for Expansion and Bleeding of Freshly Mixed Grouts for Preplaced-Aggregate Concrete in the Laboratory.
    l. ASTM D75/D75M – Standard Practice for Sampling Aggregates.
    m. ASTM D422 – Standard Test Methods for Particle-Size Analysis of Soils.
    n. ASTM D698 – Standard Test Methods for Laboratory Compaction Characteristics of Soil Using Standard Effort 12,400 ft-lbf/ft³.

o. ASTM D1140 – Standard Test Methods for Determining the Amount of Material in Soils Finer than the No. 200 Sieve in Soils by Washing.
p. ASTM D1241 – Standard Specification for Materials for Soil-Aggregate Subbase, Base, and Surface Courses.
q. ASTM D1556/D1556M – Standard Test Method for Density and Unit Weight of Soil In-place by the Sand Cone Method.
r. ASTM D1557 – Standard Test Methods for Laboratory Compaction Characteristics of Soil Using Modified Effort 56,000 ft-lbf/ft³.
s. ASTM D2167 – Standard Test Method for Density and Unit Weight of Soil in Place by the Rubber Balloon Method.
t. ASTM D2487 – Standard Practice for Classification of Soils for Engineering Purposes (Unified Soil Classification System).
u. ASTM D3776/D3776M REV A – Standard Test Methods for Mass per Unit Area (Weight) of Fabric.
v. ASTM D4253 – Standard Test Methods for Maximum Index Density and Unit Weight of Soils Using a Vibratory Table.
w. ASTM D4254 – Standard Test Methods for Minimum Index Density and Unit Weight of Soils and Calculation of Relative Density.
x. ASTM D4318 – Standard Test Methods for Liquid Limit, Plastic Limit, and Plasticity Index of Soils.
y. ASTM D4546 – Standard Test Methods for One-Dimensional Swell or Settlement Potential of Cohesive Soils.
z. ASTM D4632/D4632M REV A – Standard Test Method for Grab Breaking Load and Elongation of Geotextiles.
aa. ASTM D4751 – Standard Test Method for Determining the Apparent Opening Size of a Geotextile.
bb. ASTM D4832 – Standard Test Method for Preparation and Testing of Controlled Low Strength Material (CLSM) Test Cylinders.
cc. ASTM D4833/D4833M – Standard Test Method for Index Puncture Resistance of Geotextiles, Geomembranes, and Related Products.
dd. ASTM D5084 – Standard Test Methods for Measurement of Hydraulic Conductivity of Saturated Porous Materials Using a Flexible Wall Permeameter.
ee. ASTM D5239 – Standard Practice for Characterizing Fly Ash for use in Soil Stabilization.
ff. ASTM D6938 - Standard Test Methods for In-Place Density and Water Content of Soil and Soil-Aggregate by Nuclear Methods (Shallow Depth).

2. Occupational Safety and Health Administration (OSHA):
   a. 29 CFR Part 1926 - Safety and Health Regulations for Construction.
3. Standard Specifications for Road and Bridge Construction, State of Missouri.

1.05 SUBMITTALS:

A. Submit as specified in Division 01.
B. Includes, but not limited to, the following:
   1. Test results from laboratory testing of proposed borrow material.
   2. Test results from laboratory testing of granular material and trench stabilization material.
   3. Test results from laboratory testing of CLSM.
   4. Erosion control plan.
   5. Dewatering Plan.
   6. Sheeting and Shoring Excavation Plan.

C. Where selecting an option for excavation, trenching, and shoring in compliance with local, state, or federal safety regulations such as OSHA 29 CFR Part 1926 or successor regulations, which require design by a registered Professional Engineer, submit the following:
   1. Copies of design calculations and notes for sloping, benching, support systems, shield systems, and other protective systems prepared by or under the supervision of a Professional Engineer legally authorized to practice in the jurisdiction where the Project is located.
   2. Documents provided with evidence of registered Professional Engineer's seal, signature, and date in accordance with appropriate state licensing requirements.

1.06 QUALITY ASSURANCE:

A. Sampling and Testing:
   1. Tests to determine conformance with all requirements of this Specification for quality and properties of all Contractor -secured materials, including borrow materials both on- or off-site proposed for use, shall be performed by an independent, commercial laboratory retained and compensated by Contractor, and approved by Engineer.
   2. When incorporating materials into the Project, quality control testing will be performed during construction by a testing laboratory retained and compensated by the Contractor.

1.07 PROJECT CONDITIONS:

A. Carefully maintain all benchmarks, monuments, and other reference points and replace as directed by Engineer if disturbed or destroyed.

B. Temporary Erosion and Sediment Controls: Furnish, install, construct, and maintain temporary measures to control erosion and minimize the siltation of intermittent streams and the pollution of private properties. Erosion and sediment controls must be installed prior to commencement of work. Temporary erosion and sediment control measures shall be constructed in substantial compliance with local, state, federal, and jurisdictional agency's regulations and Contract Drawings (if applicable). Temporary erosion and sediment control measures shall be maintained until completion of the Work. The Contractor shall be responsible for submitting the Stormwater Pollution Prevention Plan (SWPPP) after review and approval by Engineer.

C. Disposition of Utilities:
   1. Existing underground utilities are shown on Contract Drawings using the best information available at the time of Drawing preparation. Contractor shall identify, locate and protect all underground utilities which may be affected by construction under this Contract before starting excavation or other Site construction activities which could damage existing utilities.
   2. Remove or relocate only as indicated, specified, or directed. Provide a minimum 1-week notice to Engineer and receive written notice to proceed before interrupting any utility service.
   3. Adequately protect from damage all active utilities and remove or relocate only as indicated or approved.
   4. Report active, inactive, and abandoned utilities encountered in excavating and grading operations that are not indicated on Contract Drawings. Remove, plug, or cap as directed by Engineer.
   5. Provide as-constructed Drawings of underground facilities either not shown or found at locations that differ from those shown on Contract Drawings.

D. Survey Work, to accurately determine locations, elevations, and quantities of Contract pay items, shall be performed during the course of construction by Professional Surveyor registered

in the state of Missouri. Surveyor shall be retained and compensated by Contractor. Contractor shall notify Engineer prior to commencing survey work.

PART 2 - PRODUCTS

2.01 MATERIALS ENCOUNTERED:

A. Suitable Materials: Materials suitable for use in embankment and fill include material that is free of debris, roots, organic matter, frozen matter, and which is free of stone having any dimension greater than 2 inches in areas requiring a high degree of compaction, or 4 inches in other embankment and fill areas. The City reserves the right to make the final determination on the suitability or unsuitability on materials encountered. Suitable materials may consist of the following:
   1. Cohesionless materials include gravels, gravel-sand mixtures, sands, and gravelly sands generally exclusive of clayey and silty material with the following properties:
      a. Are free-draining.
      b. Impact compaction will not produce a well-defined moisture-density relationship curve.
      c. Maximum density by impact methods will generally be less than by vibratory methods.
      d. Generally, less than 15% by dry weight of soil particles pass a No. 200 square-mesh sieve.
   2. Cohesive materials include materials made up predominately of silts and clays generally exclusive of sands and gravel with the following properties:
      a. Impact compaction will produce a well-defined, moisture-density relationship curve.
      b. Are not free draining.

B. Unsuitable Materials: Materials unsuitable for use in embankment and fill include all material that contains debris, roots, organic matter, frozen matter, shale particles, or material containing gravel or stone with any dimension greater than 2 inches in areas requiring a high degree of compaction or 4 inches in other embankment and fill areas, or other materials that are determined by Engineer as too wet or otherwise unsuitable for providing a stable subgrade or stable foundation for structures. Any material not defined in Section 2.01 Paragraph A, Suitable Materials, shall be considered unsuitable. The City reserves the right to make the final determination on the suitability or unsuitability on materials encountered.

C. Material used for embankment or fill:
   1. Low Volume Change (LVC) material for all locations and elevations but specifically below grade support floors. LVC material can be a clay soil having a maximum Liquid Limit (LL) of 45 and a maximum Plastic Index (PI) of 23 or a granular material having at least 18% low plasticity fines. Place a minimum of 24 inches of LVC on top of native soil or engineered fill beneath grade supported slabs and 12 inches of LVC o top of native soils or engineered fill beneath pavements.
   2. Berm construction: Prior to placement of fill, expose native soil subgrade. Proof roll using a loaded dump truck or scraper having a minimum gross weight of 20 tons. Remove and replace any unsuitable areas.
   3. Crushed Aggregate Pavements: In locations where crushed aggregate pavements are to be used place a geotextile on the soil subgrade prior to placement of the aggregate. A minimum of 8 inches of crushed aggregate must be place on top of geotextile.

D. Materials to be excavated shall be classified as follows for purpose of payment:
   1. Common Excavation: Includes all materials excavated other than rock excavation and all

boulders or detached pieces or solid rock, (prior to blasting,) less than 2 yds.^{3} in volume.

2. Rock Excavation: Includes boulders 2 yds.^{3} or more in volume and materials that cannot be removed without systematic drilling and blasting such as materials in ledges or aggregate conglomerate deposits that are so firmly cemented as to possess the characteristics of solid rock. Hard and compacted materials such as cemented gravel, glacial till, shale, and relatively soft or disintegrated rock that can be loosened by a large tractor-mounted hydraulic ripper without continuous and systematic drilling and blasting will not be considered as "rock". Material will not be considered as "rock" because of intermittent drilling and blasting that is performed merely to increase production.
3. Approximate location of rock to be excavated on Drawings is based on Engineer's opinion only, resulting from analysis of subsurface data obtained for design purposes, and is not guaranteed to be an accurate representation of the extent or composition of rock to be excavated.
    a. Subsurface data will be used as a basis to determine the rock quantities for Bid purposes.
    b. Final quantities will be adjusted based on actual field measurements. Adjustments to the Base Bid for this final quantity will be made using unit prices and the following guidelines.
        (1) When layers of rock and soil are encountered, the excavated soil between the layers of rock will be considered as rock excavation if the thickness of the soil layer does not exceed 6 inches.
        (2) When rock is encountered, the overburden material shall be removed to expose the rock surface. The top of the rock surface shall be surveyed by a Licensed Surveyor retained by Contractor at minimum 25 ft. centers before and after the rock is excavated. Engineer will use the survey data to determine excavated rock quantities.
4. If/when rock is encountered within the limits of the excavation, notify Engineer immediately. Proceed with excavation only after measurements are made for establishing the volume of rock excavation.
5. Submit one copy of survey notes and field cross-sections, on the date completed, to Engineer and distribute other copies as specified in Division 01.
6. Designate a responsible person on the Site during construction to maintain records of survey notes and field cross-sections. Report survey data to Engineer on daily basis.
7. Excavate rock to limits required by the Drawings. If limits are not shown on drawings, excavate rock to the following limits. Excavation exceeding the limits will be considered as unauthorized and will not be measured for payment.
    a. One ft. below finish grade in areas designated to be seeded or sodded.
    b. Six inches below finish subgrade for all pavement areas.

E. Waste Materials:
1. Waste materials, as described for purposes of this Section, consist of unsuitable materials, excess suitable material, rock, demolition debris, and other materials considered unacceptable for use as fill, and which are not environmentally contaminated. Waste materials shall not include environmental pollutants, hazardous substances, contaminated products, by-products, samples, or waste materials of any kind that are regulated under environmental laws.
2. Environmentally contaminated waste materials include environmental pollutants, hazardous substances, contaminated products, by-products, samples, or waste materials of any kind that are regulated under environmental laws. Environmentally contaminated waste also include soil containing concentrations of hazardous constituents at levels requiring special handling and disposal methods.
3. Dispose of waste materials in accordance with Paragraph 3.03G.

2.02 BORROW MATERIALS:

A. Suitable fill materials, granular materials, and topsoil obtained from locations arranged for by Contractor (off the Site). Required to the extent sufficient suitable materials are not obtained from excavation and trenching.
B. Obtain, excavate, haul, handle, place, and compact borrow materials.
C. Borrow materials shall not exhibit characteristics of high shrink-swell potential as determined from Atterberg limit tests (ASTM D4318) and/or swell tests (ASTM D4546) unless otherwise specified herein.

2.03 GRANULAR MATERIAL:

A. Crushed stone or crushed gravel indicating a loss of not more than 15% after five cycles when tested for soundness with sodium sulfate as described in ASTM C88 and conforming to one of the following gradations:

Standard Square Mesh Sieve U.S. Size or No.	MoDOT Section 1006 Grade A Percent Passing
1 inch	100
3/4 inch	80 to 100
3/8 inch	--
No. 4	60
No. 10	10 to 35
No. 200	0 to 10

B. Use at all locations where granular material is required unless otherwise indicated or specified.
C. Granular material shall be crushed limestone conforming to MoDOT Grade 5.

2.04 EMBANKMENT AND FILL MATERIAL:

A. Material shall be free of roots or other organic matter, refuse, ashes, cinders, frozen earth, or other unsuitable material.
B. Use suitable material sufficiently friable for embankment to provide a dense mass free of voids and capable of satisfactory compaction.
C. Do not use material containing gravel, stones, or shale particles greater in dimension than one-half the depth of the layer or lift to be compacted.
D. Moisture content shall be that required to obtain specified compaction of the soil or as indicated.
E. Perform moisture curing by wetting or drying of the material as required to attain required compaction criteria.

2.05 TRENCH STABILIZATION MATERIAL:

A. Granular material as specified or conform to ASTM D1241, Gradation A or B, well-graded, with not more than 10% passing No. 200 sieve.

2.06 RIPRAP:

A. Riprap Material:
   1. All stone shall be durable and of suitable quality to ensure permanence in the structure and in the climate in which it is to be used.
   2. Boulders or quarried rock may be used and shall be graded as per the construction drawings/specifications.
   3. Quantity of rock with an elongation greater than 3:1 shall not exceed 20% of the mass. No stone shall have an elongation greater than 4:1.

4. Stone shall be free from cracks, seams or other defects that would tend to increase its deterioration from natural causes.
5. Objectionable quantities of dirt, sand, clay, and rock fines will not be permitted. Final determination of objectionable quantities will be made by the Public Works Director.
6. Not more than 10% of the stone shall show splitting, crumbling, or spalling when subjected to five cycles of the sodium soundness test as required by AASHTO T104.
7. Contractor may be required to furnish a sample of stone as part of the submittal process to the Public Works Department for acceptance.
8. In lieu of conforming to above specified test requirements, material with a proven history of satisfactory performance may be approved for use in the Work provided certification of this history is acceptable to Engineer.
9. Refer to Standard Detail #40, Riprap for additional information.

B. Bedding/Filter Materials:
1. Filter Blanket:
   a. Material shall be crushed rock with the following gradation:

Standard Square-Mesh Sieve

U.S. Size or No.	Percent Passing by Weight
4 inch	100
3 inch	80 to 100
2 inch	70 to 90
3/4 inch	45 to 60
No. 4	20 to 30
No. 10	5 to 15
No. 40	0 to 5

   b. Gradation shall not vary from low limit on one sieve to high limit on adjacent sieve or vice versa.
   c. Sampling procedure shall conform to ASTM D75/D75M.
   d. Material shall not have a loss of more than 15% after five cycles when tested for soundness with sodium sulfate as described in ASTM C88.
2. Geotextile Fabric:
   a. Geotextile Fabric shall be a nonwoven fabric consisting of continuous chain polymeric filaments or yarns of polyester, or polypropylene formed into a stable network by needle punching.
   b. Geotextile Fabric shall be resistant to mildew and rot, ultraviolet radiation, insects and rodents.
   c. Geotextile Fabric shall conform to the following minimum requirements which shall be the minimum average roll values for the roll of geotextile:
      (1) Weight: 15 oz./yd.^{2} as determined by ASTM D3776/D3776M REV A.
      (2) Puncture Strength: 195 lbs. as determined by ASTM D4833/D4833M.
      (3) Grab Tensile Strength: 380 lbs. as determined by ASTM D4632/D4632M REV A.
      (4) Elongation at Failure: 50% as determined by ASTM D4632/D4632M REV A.
      (5) Apparent Opening Size: 100 sieve as determined by ASTM D4751.

2.07 CONTROLLED LOW-STRENGTH MATERIAL (CLSM OR FLOWABLE FILL):

A. Materials:

1. Portland cement Type I or Type II conforming to ASTM C150/C150M.
2. Fly ash conforming to ASTM C618 for Class C.
3. Fine aggregate (sand) conforming to ASTM C33/C33M or C144.
4. Water, clean and potable, conforming to ASTM C94/C94M.
5. Shrinkage compensator shall be proportioned in accordance with the manufacturer's recommendations, and as tested by ASTM C940.
6. Admixtures for air entrainment or other purposes conforming to ASTM C173/C173M or C231/C231M, or other appropriate standards referenced by manufacturer.
7. Bentonite in proportions indicated or as required for the Project within areas of U.S. Army Corps of Engineers flood protection systems.

B. Mix Design:

1. Mix design for CLSM (flowable fill) shall be in accordance with the requirements of APWA 2602.2H.
2. Submit details of the proposed mix design along with strength test results from an approved laboratory retained by Contractor. Commercial brand mixtures that have documented prior mix design strength history may be used with prior submittal of appropriate test results, mix design indicating conformance with these requirements, and approval by Engineer.
3. Mix design shall permit adjustments in proportions of fine aggregate and/or water to achieve proper solid suspension and optimum flowability with approval of Engineer, and providing for the calculated yield to be maintained at 1 yd.^{3} for the given batch weights.
4. Mix design shall meet requirements for minimum and/or maximum strengths indicated.
5. Consistency of the mix shall be that of a batter, not thin and/or watery.
6. Typical design for trial mixes of CLSM (flowable fill), unless otherwise indicated to provide a minimum volume of 1 yd.^{3}, is as follows:
   a. Nonremovable CLSM:

(1)	Cement	100 lbs.
(2)	Class C Fly Ash	300 lbs.
(3)	Sand	2766 lbs.
(4)	Water	417 lbs.
(5)	Air Entrainment	4%
(6)	Shrinkage Compensator	In accordance with manufacturer

7. CLSM shall be used unless otherwise specified or indicated.
8. Bentonite powder, if required, shall be blended with the cement and fly ash prior to adding any water to the mix, with a minimum of 20% by dry weight of combined cement and fly ash cementitious material. Blending and mixing of bentonite shall be complete and uniform, without balling-up or concentration of bentonite in clumps. Proportions of mix and mixing placement shall not adversely affect overall physical properties required for the in-place CLSM, yet provide for self-healing of any cracks that may develop over time due to shrinkage or other forces upon CLSM.
9. Flowable fill (CLSM) shall exhibit the following physical properties:
   a. CLSM Mixes:
      (1) Minimum unconfined compressive strength of 500 psi at 28 days.
   b. Provide for set-up within 12 hours.
   c. Evaporation of bleed water shall not result in shrinkage of more than 1/8 inch per foot of flowable fill (CLSM) thickness.
   d. Unit weight of 120 to 80 lbs. per cf, as measured at the point of placement after transport.

SECTION 312050 – SITE PREPARATION AND EARTHWORK: continued

PART 3 - EXECUTION

3.01 DEMOLITION:

A. Remove existing structures and improvements as required (as indicated) to perform new construction.
B. Carefully dismantle, in a manner to avoid damage, all materials and equipment indicated to be relocated or returned to the City.
C. Material or equipment, specified or indicated to be relocated or returned to the City, that is damaged due to Contractor's negligence shall be repaired or replaced, as determined by Engineer, at no additional cost to the City.
D. Materials not indicated or specified to be relocated or returned to the City shall become property of Contractor and be disposed of as specified in "Waste Materials," this Part.
E. Perform demolition work to protect existing facilities, structures, and property which are to remain, against damage from operations, falling debris, or other cause.
F. Make provisions for temporarily accommodating flows in existing facilities that are to be relocated or disturbed.
G. Take precautions to guard against movement or settlement, and provide shoring and bracing as necessary.
H. If at any time safety of existing structure to remain is endangered, cease operations, notify Engineer, and do not resume operations prior to approval.
I. Remove concrete by jack hammering, sawing, core drilling, or other approved method.
J. Remove existing pavement by jack hammering, sawing, scarifying, or other approved methods except as follows:
    1. Existing asphaltic or Portland cement concrete pavement shall be sawed at point where pavement indicated to remain ends and pavement indicated to be removed begins.
    2. Existing Portland cement concrete pavement shall be removed back to the nearest joint unless otherwise indicated or approved by Engineer.

3.02 SITE PREPARATION:

A. Sediment (Silt) Fence:
    1. Install silt fence as indicated and as follows:
        a. On the downslope side(s) of all disturbed areas.
        b. On the downslope side(s) of all stockpile areas.
        c. Silt socks may be allowed in lieu of silt fences.
    2. Inspection:
        a. Daily in areas of active construction or equipment operation.
        b. Weekly in areas with no construction or equipment operation.
        c. Within 24 hours of each 0.5 inch or greater rainfall event.
        d. Complete inspection reports after each inspection and submit to Engineer within two working days.
    3. Maintenance:
        a. Remove sediment from behind silt fence when it reaches one-third the height of fence. Place removed sediment in topsoil stockpile areas.
        b. Any silt fence damaged so it cannot perform its intended function shall be replaced as indicated or as directed by Engineer.
        c. Remove silt fence after area has been surfaced or seeded and has been accepted by Engineer.
        d. Payment for silt fence replacement shall conform to the Unit Price for Silt Fence stated in Agreement.

SECTION 312050 – SITE PREPARATION AND EARTHWORK: continued

B. Construction Access:
   1. Immediately remove by shoveling and/or sweeping all sediment tracked from the construction area onto Site access roads. Place sediment in stockpile areas.

C. Clearing and Grubbing:
   1. Perform as designated on plans, required for construction, or as designated by the Engineer.
   2. Protect tops, trunks, and roots of existing trees which are to remain on Site.
   3. Clear areas and dispose of other trees, brush, and vegetation before starting construction.
   4. Remove tree stumps and roots larger than 3 inches in diameter and backfill resulting excavations with compacted, suitable material.
   5. Dispose of debris from clearing and grubbing at a location off the Site, as arranged for by Contractor, at no additional cost to the City.

D. Stripping:
   1. Remove topsoil from areas within limits of excavation, trenching and borrow, and areas designated to receive embankment and compacted fill.
   2. Scrape areas clean of all brush, grass, weeds, roots, and other material.
   3. Strip to depth of approximately 6 inches or to a sufficient depth to remove excessive roots in heavy vegetation or brush areas and as required to segregate topsoil, or as directed by Engineer.
   4. Stockpile topsoil in areas where it will not interfere with construction operations or existing facilities. Stockpiled topsoil shall be reasonably free of subsoil, debris, and stones larger than 2 inches in diameter.
   5. Remove waste from the Site.

3.03 EXCAVATION AND TRENCHING:

A. Sheeting and Bracing:
   1. Design, furnish, place, maintain, and subsequently remove, to extent required, a system of temporary supports for cut and cover, open cut, or trench excavations, including bracing, dewatering, and associated items to support sides and ends of excavations where excavation slopes might endanger in-place or proposed improvements, extend beyond construction rights-of-way, or as otherwise specified or indicated.
   2. Provide all materials on Site prior to start of excavation in each section, and make such adjustments as are required to meet unexpected conditions.
   3. Space and arrange sheeting and bracing as required to exclude adjacent material and according to stability of excavation slopes.
   4. Assess existing conditions including adjacent property and possible effects of proposed temporary works and construction methods; and select and design such support systems, methods, and details as will assure safety to the public, adjacent property, and the completed Work.
   5. Modify or relocate underground facilities, at no additional cost to the City, if existing underground facilities interfere with Contractor's proposed method of support.
   6. Use caution in areas of underground facilities, which shall be exposed by hand or other excavation methods acceptable to the City.
   7. Perform sheeting, shoring, and bracing in accordance with safety and protection requirements of the Contract Documents.
   8. Provide sheeting, shoring, and bracing for trench excavation in subgrade of excavation when required to prevent movement of the main excavation support system.
   9. Provide shoring, sheeting, and bracing as indicated or as needed to meet the following requirements:
      a. Prevent undermining and damage to all structures, buildings, underground facilities,

pavements, and slabs.

b. Perform excavations with vertical banks where necessary for construction activities or as indicated, and also within all limits of excavation noted on Drawings.

c. Design excavation support system and components to support lateral earth pressures, unrelieved hydrostatic pressures, utility loads, traffic and construction loads, and building and other surcharge loads to allow safe and expeditious construction of permanent structures without movement or settlement of the ground, and to prevent damage to or movement of adjacent buildings, structures, underground facilities, and other improvements. Design shall account for staged removal of bracing to suit the sequence of concrete placement for permanent structures and backfill.

d. Except as otherwise specified herein, shoring and sheeting materials may be extracted and reused at Contractor's option; however, Contractor shall remove and replace any existing structure or underground facility damaged during shoring and sheeting. Remove sheeting and bracing as backfill progresses. Fill voids left after withdrawal with sand or other material approved by Engineer.

e. Where shoring and sheeting materials must be left in place in the completed Work to prevent settlements to or damage within adjacent structures or as directed by Engineer, backfill the excavation to 3 ft. below finished grade and remove the remaining exposed portion of shoring before completing backfill. If soldier piles and wood lagging are used for shoring, remove wood lagging to within 3 ft. of finished grade in incremental steps of approximately 6 inches as backfill is placed, or to Contractor's design if more stringent. Location of all shoring and sheeting left in-place shall be documented on Contractor-furnished construction record Drawings and provided to Engineer and the City.

10. Contractor shall be solely responsible for proper design, installation, operation, maintenance, and any failure of any component of the system. Review by Engineer of Drawings and data submitted by Contractor shall not in any way be considered to relieve Contractor from full responsibility for errors therein or from the entire responsibility for complete and adequate design and performance of the sheeting and shoring system.
11. Provision for Contingencies:
    a. Performance of components of the support system shall be monitored for both vertical and horizontal movement daily.
    b. Provide a contingency plan or alternative procedure for implementation, if system does not adequately perform.
    c. Keep materials and equipment necessary to implement the contingency plan readily available.
12. Damages:
    a. Document all existing damage to adjacent facilities and submit information to the City prior to performing any excavation. Documentation shall include a written description, diagrams, measurements, and appropriate photographs.
    b. Repair all damage resulting from Contractor's excavation and remove and replace all undermined pavements with equal approved by the City, either concrete or asphalt, at no expense to the City.

B. Explosives: Blasting will not be permitted unless directed by the City or other Authority Having Jurisdiction (AHJ) A blasting permit application must be filled and submitted to the Builds Department for review and approval. No blasting will occur before A blasting plan will be required and must be approved and executed by a properly trained and licensed Blaster-in-Charge (BIC). Inspection of utilities before and after blasting will be required within the blast area.

SECTION 312050 – SITE PREPARATION AND EARTHWORK: continued

C. Excavation for Structures:
   1. Excavate area adequate to permit efficient erection and removal of forms.
   2. Trim to neat lines where details call for concrete to be deposited against earth.
   3. Excavate by hand in areas where space and access will not permit use of machines.
   4. Notify Engineer immediately when excavation has reached the depth indicated.
   5. Overexcavate and replace any localized zones of excessively wet, unstable, organic, yielding, or low bearing capacity materials as directed by Engineer. Restore bottom of excavation to proper elevation with compacted fill in areas overexcavated. Correct at no additional cost to the City when overexcavated without authority or to stabilize bottom rendered unsuitable through negligence or improper dewatering or other operations.
   6. Top with 3-inch concrete seal coat where indicated and where required to provide satisfactory subgrade for structural base slabs. Payment for seal coats not indicated but required by Engineer shall conform to the Unit Price stated for Additional Concrete in the Agreement.
   7. Use sides of trenches to form sides of duct banks where possible and where sides of trench are vertical, stable and excavated to the proper line.

D. Trenching for Underground Utilities:
   1. Side Walls:
      a. Make vertical or sloped within specified trench width limitations below a plane 12 inches above top of pipe.
      b. Make vertical or sloped (stepped) as required for stability, above a plane 12 inches above top of pipe.
      c. Excavate without undercutting sidewalls.
   2. Trench Depth:
      a. Excavate to depth sufficient to provide the minimum bedding requirements for the pipe being placed.
      b. Do not exceed that indicated where conditions of bottom are satisfactory.
      c. Increase depth as necessary to remove unsuitable supporting materials.
      d. Maintain a minimum of 3.5 ft. of soil cover above top of pipe.
   3. Trench Bottom:
      a. Protect and maintain when suitable natural materials are encountered.
      b. Remove rock fragments and materials disturbed during excavation or raveled from trench walls.
      c. Restore to proper subgrade with trench stabilization material or timber mat topped with trench stabilization material when overexcavated.
         (1) Correct at no additional cost to the City when trench is overexcavated without authority or to stabilize bottom rendered unsuitable through negligence or improper dewatering or other operations.
         (2) Placement of Trench Stabilization Materials:
            (a) Compact in lifts not exceeding 6-inch loose thickness:
               1). With pneumatic or vibratory equipment.
               2). To density specified for granular pipe embedment.
   4. Trench Width:
      a. Excavate trench to a width which will permit satisfactory jointing of pipe and thorough tamping of bedding and backfill.
      b. Do not exceed following trench widths:
         (1) For single pipe installation, maintain trench widths below a plane 12 inches above top of pipe as follows:

Nominal Pipe Size	Trench Width Minimum	Maximum
Less than 24 inches	Pipe od + 1 ft.	Pipe od + 2 ft.
24 inches to 60 inches	Pipe od + 2 ft.	Pipe od + 4 ft.
Larger than 60 inches	Pipe od + 3 ft.	Pipe od + 5 ft.

(2) For multiple pipe installations maintain trench widths below a plane 12 inches (300 mm) above the top of the largest pipe as follows:

Nominal Pipe Size Of Outside Pipe	Trench Clearances Minimum from Outside Pipe	Maximum from Outside Pipe
Less than 24 inches	6 inches	12 inches
24 inches to 60 inches	12 inches	24 inches
Larger than 60 inches	18 inches	30 inches

(3) Above plane defined in (1) and (2), no maximum limit.
(4) Maximum trench width limitations shall apply in all areas more than 3 ft. (1 m) from manhole or structure walls.
(5) Maximum width shall be as near the minimum specified as can be controlled by construction equipment and methods used.

5. Fill and Embankment Areas: Perform trenching only after compacted fill or embankments have reached an elevation of not less than 1 ft. above top of pipe.
6. Limit maximum length of open trench to 50 ft. in advance and to 50 ft. behind pipe installation.
7. Test Pits:
   a. Excavate test pits sufficiently in advance of trenching to enable adequate planning of construction procedure.
   b. Locate as follows:
      (1) When unstable material is suspected that may require special protective measures.
      (2) Where groundwater may require special handling methods.
      (3) Where indicated or otherwise approved.
      (4) Where interference or conflict with other utilities or structures could affect alignment of pipe.
   c. To depth required to obtain information desired.

E. Dewatering:
1. Control grading around excavations to prevent surface water from flowing into excavation areas.
2. Drain or pump as required to continually maintain, including days not normally worked, all excavations free of water or mud from any source, and discharge to approved drains or channels. Commence when water first appears and continue as required to keep excavation free of standing water during entire time excavation is open.
3. Use pumps of adequate capacity to ensure rapid drainage of area, and construct and use drainage channels and subdrains with sumps required.
4. When water is found in excavation due to Contractor negligence, remove unsuitable excessively wet subgrade materials and replace with approved compacted fill material as directed by Engineer and at no additional cost to the City.

5. Design:
   a. Designate and obtain services of a qualified dewatering specialist or expert to provide a dewatering plan as may be necessary to complete the Work. Provide dewatering plan at time of Bid submission. Plan items shall include, but not be limited to, the following:
      (1) Drawings indicating general location and size of berms, dikes, ditches, all deep wells, observation piezometer wells, wellpoints, jet eductors, sumps and discharge lines, including their relation to water disposal ditches.
      (2) Make, model, and capacities of pumps, prime movers, power generators, and standby equipment.
      (3) Design calculations, including any computer modeling, to show adequacy of system and selected equipment, estimated flow rate of water to be discharged, and estimated duration for groundwater to be drawn down to elevations required for excavation.
      (4) Detailed description of dewatering procedure and maintenance method.
      (5) Description of emergency plan to protect in-place construction during an unanticipated rise in groundwater due to loss of power or other unexpected conditions or inundation from surface water.
      (6) Additional details, as requested by Engineer.
      (7) Specific items to be included addressing dewatering operations using wells, wellpoints, or jet eductors shall consist of the following:
         (a) Diameter of hole drilled.
         (b) Type of equipment and method of well installation.
         (c) Diameter and material type of well casing inserted.
         (d) Elevation of top of each well.
         (e) Screen opening sizes.
         (f) Screened interval or elevations of segments in well that are screened.
         (g) Backfill gravel pack zone elevations.
         (h) Gravel pack gradation.
         (i) Size of pumps.
         (j) Anticipated pumping capacity.
         (k) Drawdown in well with time during pumping.
         (l) Drawdown in piezometers with time during pumping.
         (m) Number and location of wells.
         (n) Number and location of piezometers.
         (o) Wellpoint details.
         (p) Certification license of well-driller, where required.
   b. In preparing dewatering plan, consider all available information, together with Site constraints, excavation/sheeting requirements, and construction schedule. Other potential problems may require specific reference and amplification within dewatering plan.
   c. After completion of dewatering installation and prior to commencement of excavation, submit to the City for review a detailed plan of dewatering system as constructed, together with test data and computations demonstrating that the system is capable of achieving specified results.
   d. Contractor shall be solely responsible for proper design, installation, operation, maintenance, and any failure of any component of system. Notice to Proceed issued by the City or submittal of dewatering plans and data by Contractor shall not relieve Contractor from full responsibility for errors therein or for complete and adequate design and performance of system in controlling water level in excavated

areas and for control of hydrostatic pressures to depths specified.

e. Contractor shall be responsible for accuracy of Drawings, design data, and operational records required by this Section.

f. Piezometers and Groundwater Monitoring:

(1) Install as a minimum 2 piezometers, in addition to any required by regulating agencies having jurisdiction, at locations prior to excavation below the groundwater level for purpose of monitoring groundwater elevations in vicinity of excavation. Design and location of piezometers will be subject to review by Engineer.

(2) Observe and record twice daily the elevation of groundwater in all piezometers on a daily basis seven days a week, and furnish a daily written summary of observations to Resident Project Representative. Record groundwater elevations to nearest 0.1 ft., with observations conducted throughout duration of any dewatering, and until dewatering is no longer required.

(3) Monitor upstream and downstream river/stream levels to anticipate rising groundwater levels.

(4) Repair or replace within 24 hours piezometers that become inactive, damaged, or destroyed. If required, suspend excavation and construction activities in areas where piezometers are not functioning properly until reliable observations can be made. Add or remove water from piezometer risers and demonstrate that piezometers are functioning properly.

(5) Remove and grout piezometers when dewatering is completed, and in accordance with jurisdictional agencies. Notify Missouri Geological Survey upon removal of piezometers.

6. Damages:

a. Repair without additional cost to the City any damage to Work in-place, other contractors' equipment, utilities, residences, highways, roads, railroads, private and municipal well systems, adjacent structures, and the excavation, including damage to the bottom due to heave and including but not limited to, removal and pumping out of the excavated area that may result from Contractor's negligence, inadequate or improper design and operation of dewatering system, and any mechanical or electrical failure of dewatering system.

b. Remove subgrade materials rendered unsuitable by excessive wetting and replace with approved backfill material at no additional cost to the City.

7. Maintaining Excavation in Dewatered Condition:

a. Dewatering shall be a continuous operation. Interruptions due to power outages, or any other reason shall not be permitted.

b. Continuously maintain excavation in a dry condition with positive dewatering methods during preparation of subgrade, installation of pipe, and construction of structures until critical period of construction and/or backfill is completed to prevent damage of subgrade support, piping, structure, side slopes, or adjacent facilities from flotation, or other hydrostatic pressure imbalance.

c. Provide standby equipment on Site, installed, wired, and available, for immediate operation if required to maintain dewatering on a continuous basis in event any part of system becomes inadequate or fails. If dewatering requirements are not satisfied due to inadequacy or failure of dewatering system, perform such work as may be required to restore damaged structures and foundation soils at no additional cost to the City.

d. Subsequent to completion of excavation and during installation of all Work in the

excavated area, maintain the excavation in a dewatered condition.

e. System maintenance shall include but not be limited to 24-hour supervision by personnel skilled in the operation, maintenance, and replacement of system components, and any other work required to maintain the excavation in a dewatered condition.

8. System Removal:
   a. Remove all dewatering equipment from Site, including related temporary electrical service.
   b. All wells shall be removed or cut off a minimum of 3 ft. below the final ground surface, capped, and abandoned in accordance with regulations by agencies having jurisdiction.
   c. Removal work required under this Paragraph does not include any Site cleanup work as required elsewhere in these Specifications.
9. River/Stream Crossings:
   a. River/Stream crossings exist as indicated along this Project, requiring excavation below potential stream or river phreatic levels. Dewatering methods shall incorporate means to account for rising or varying water levels associated with these bodies of water and their interconnected waterways, whether surface or subsurface, to prevent threatening integrity of the excavation, existing facilities, and Work under construction.
   b. Conform to applicable requirements in all related Sections.
   c. Maintain area drainage during construction.
   d. Complete channel protection expeditiously following excavation.

F. Waste Materials:
1. Remove unsuitable materials from Work area as excavated.
2. Material shall become property of Contractor and shall be disposed of off-site at locations arranged for by Contractor. Grade waste areas and leave free-draining with an orderly, neat appearance. Side slopes shall not be steeper than three horizontal to one vertical. Topsoil, seed, and mulch waste areas.
3. Submit to Engineer a plan for approval for handling, transportation, and disposal of excess soils. The soil management plan shall include the following information:
   a. Procedures for characterizing excess soil, including frequency of sample collection. Contractor shall be responsible for testing and laboratory fees associated with soil characterization.
   b. Procedures for handling and transporting soil off-site.
   c. Procedures for disposing of soil, including disposal facility, property, etc. If property, provide details regarding property location and use.
      (1) Excess soils shall be disposed of in accordance with the regulations outlined in the Revised Statutes of Missouri (RSMo) Chaper 260 Environmental Control and other applicable environmental laws.

3.04 EARTHWORK:

A. Subgrades:
1. General:
   a. Excavate or backfill as required to construct subgrades to elevations and grades indicated.
   b. Remove all unsuitable material and replace with acceptable fill material and perform all wetting, drying, shaping, and compacting required to prepare subgrade.
   c. Proofrolling: Exposed area to receive fill, backfill, or embankment shall be proofrolled to detect localized zones of excessively wet, unstable, organic, or low bearing capacity materials as follows:

(1) Proofroll as a single-pass operation with conventional compaction equipment during subgrade preparation and prior to placement of fill, and as a spot check process without the need for complete coverage per unit area of tire. Soft spots shall be overexcavated, backfilled, and compacted with suitable material.
(2) Proofroll new pavement and berm fill areas using a loaded, tandem axle dump truck having a minimum gross weight of 20 tons prior to placing pavements.
(3) Proofroll within limits of proposed construction of footings, slabs, mats, or pavement and to extent of 10 ft. beyond proposed exterior walls and stated limits, or as otherwise noted. Proofroll with loaded dump truck, loaded pan scrapper, 15-ton light class pneumatic tired roller compactor, or equivalent. Ground contact pressure of 80 psi and average speed of 5 miles per hour shall be maintained and continue until extent of soft spots is determined with not less than one pass per unit area of tire. Soft spots shall be overexcavated, backfilled, and compacted with suitable material.

2. Subgrade for Fills and Embankments: Roughen by discing or scarifying and wet or dry top 6 inches as required to bond with fill or embankment.
3. Subgrade for Roadways, Drives, Parking Areas:
   a. Extend subgrade the full width of pavement or base course, plus 1 ft. in each direction.
   b. Cohesive Soil Subgrades: Compact the top 6 inches of subgrade for traffic areas and railroads in embankment or excavation
      (1) If LL<40 compact to a minimum of 95% standard Proctor dry density within the moisture content range from 2% below optimum to 2% above optimum.
      (2) If LL>40 compact to a minimum of 95% standard Proctor dry density from 0% below optimum to 4% above optimum.

      Optimum moisture and maximum dry density shall be determined by ASTM D698.
   c. Cohesionless Soil Subgrades: Compact the top 6 inches of subgrade for traffic areas and railroads in embankment or excavation to not less than 70% of relative dry density as determined by ASTM Methods D4253 and D4254.
4. Subgrades for Concrete Slabs on Grade, Mats, and Footings:
   a. Compact cohesive soil subgrades.
      (1) For LL<40 compact to a minimum of 95% standard Proctor dry density within the moisture content range from 2% below optimum to 2% above optimum.
      (2) For LL>40 compact to a minimum of 95% standard Proctor dry density from 0% below optimum to 4% above optimum.

      Optimum moisture and maximum dry density shall be determined by ASTM D698.
   b. Where subgrade consists of cohesionless granular materials, compact to not less than 70% relative density as determined by ASTM D4253 and D4254.

B. Pipe Embedment:
1. Pipe bedding shall be as indicated, using granular material.
2. Place granular embedment as follows:
   a. With level bottom layer at proper grade to receive and uniformly support pipe barrel throughout its length.
   b. Form depression under each joint so that no part of bell or coupling is in contact with trench when pipe is placed in position.
   c. Add second layer simultaneously to both sides of pipe with care to avoid displacement.

d. Complete promptly after completion of jointing operations.
e. Substitute for any part of earth backfill to within 2 ft. of final grade at Contractor's option.

3. Compact granular embedment as follows:
   a. In loose lifts not exceeding 12 inches in depth.
   b. Rod, spade, or use pneumatic or vibratory equipment:
      (1) As required to obtain not less than 70% relative density as determined by ASTM Method D4253 and D4254.
      (2) Throughout depth of embedment.
   c. Compaction using flooding or water spraying techniques will not be allowed.
4. Earth pipe embedment shall be as indicated and shall be used at impervious trench checks. Shape trench bottom to fit pipe and backfill throughout depth of trench with impervious materials. Compact cohesive soil subgrade
   a. For LL<40 compact to minimum of 95% standard Proctor dry density within the moisture content range from 2% below optimum to 2% above optimum.
   b. For LL>40 compact to minimum of 95% standard Proctor dry density from 0% below optimum to 4%above optimum.

   Optimum moisture and maximum dry density shall be determined by ASTM D698.

C. Backfilling:
1. Backfill for structures and trenches shall be as specified in "Embankments and Fills," this Section, with the following additional provisions:
2. Structures:
   a. Backfill only after concrete has attained 70% design strength.
   b. Backfill adjacent to structures only after a sufficient portion of structure has been built to resist imposed load.
   c. Remove all debris from excavation prior to placement of material.
   d. Place backfill in level loose lifts of thickness within compacting ability of equipment used but not to exceed 8 inches in thickness.
   e. Perform backfilling simultaneously on all sides of structures.
   f. Exercise extreme care in use of heavy equipment in areas adjacent to structures. Equipment operated within 10 ft. of any wall shall not exceed 20,000 lbs. gross weight.
   g. Material above a 45-degree plane intersecting the footing shall not include rock fragments incapable of passing a 6-inch screen, and no shale whether disintegrated or not.
3. Trenches:
   a. Backfill for trenches shall be as specified for structures and as follows:
      (1) Complete promptly upon completion of pipe embedment and approval to proceed.
      (2) Use hand methods to a plane 12 inches above top of pipe.
      (3) Mechanical methods shall be acceptable where hand backfill is not required.
      (4) Backfill in lifts of thickness within compacting ability of equipment used, but not greater than 8 inches.
      (5) Until compacted depth over conduit exceeds 3 ft., do not drop fill material over 5 ft. Distance may then be increased 2 ft. for each additional ft. of cover.
4. Controlled Low-Strength Material (CLSM):
   a. Place CLSM (flowable fill) by means of chute, drop pipe, pump, bucket, or other method approved by Engineer to maintain consistency, flowability, and strength of

in-place final product. Fill all voids and place to indicated grades or minimum elevations noted without use of a vibrator.

b. Open ends of area to be backfilled shall be plugged or built-up with a temporary bulkhead arrangement to prevent loss of CLSM during placement or during curing.

c. Prevent movement of any adjacent structure or pipe conduit:
   (1) Anchor pipe or structure to prevent uplift or movement prior to placement of CLSM.
   (2) Prevent intrusion of CLSM into interior sections of structure or pipe.
   (3) If any such movement or intrusion occurs, affected structures or pipe shall be cleaned and may require excavation, removal, and replacement of CLSM to intended final fill elevation.

d. CLSM is intended for placement within a hole that is dry or maintained with a positive dewatering operation. If it is necessary to place CLSM under water, method for placement and mix design shall be submitted to Engineer for approval at least 10 working days prior to any intended pours.

e. Monitor surface elevation of placed CLSM and document any shrinkage or settlement of initial placement volume. Provide information of shrinkage and/or settlement of initial lift to Engineer prior to placement of any additional layers or completion of CLSM placement to final indicated elevation.

f. CSLM shall not be covered with soil or other imposed loading until a minimum compressive strength of 30 psi is attained or until a minimum of 12 hours' cure time has elapsed. Minimum strengths shall be demonstrated by laboratory test results or if permitted by Engineer, by failure to deform or crush the fill with an equivalent 30 psi applied loading in the field.

g. Protect CSLM from freezing while curing with insulated blankets or other approved methods.

h. Where air may become trapped under slabs due to grade beams or other structural components, holes shall be drilled at locations indicated, or as directed by Engineer to allow for uniform placement of CLSM entirely within the void region. Plugs shall be installed to confine CLSM, as needed. It is not intended that raising or leveling of any slabs or structural elements shall occur from placement methods.

D. Site Grading:

1. Excavate, fill, compact fill, and rough grade to bring Project area outside buildings to subgrades as follows:
   a. For surfaced areas, to underside of respective surfacing or base course.
   b. For areas to receive topsoil, to a minimum of 4 inches below finished grade.
   c. When rock is encountered in grading areas outside buildings, overexcavate to depth specified and backfill to grade with compacted fill:
      (1) Under surfaced areas, to 4 inches below top of respective subgrades for such areas.
      (2) Under lawn and planted areas, to 24 inches below finished grade, except that boulder or protruding rock outcrop, if so indicated, shall be left undisturbed.

2. Grading:
   a. Grade and compact all areas within Project area, including excavated and filled sections and adjacent transition areas, reasonably smooth, and free from irregular surface changes.
   b. Degree of finish for rough grading shall be that ordinarily obtained from blade grader or scraper operations except as otherwise specified with due allowance for topsoil.

c. Finished grades shall generally be not more than 0.1 ft. above or below those indicated.
d. Finish all ditches, swales, and gutters to drain readily.
e. Unless otherwise indicated, slope the subgrade evenly to provide drainage away from all structures in all directions at a grade not less than 1/4 inch per ft. for a minimum distance of 10 ft.
f. Provide roundings at top and bottom of banks and at other breaks in grade.

3.05 TOPSOILING:

A. Material: Use the most suitable material obtained from stripping operations and borrow when required.
1. Placement:
a. Clear areas free of vegetation, rock, and other materials which would interfere with grading and tillage operations.
b. Bond topsoil to subgrade by scarifying subgrade to a depth of 2 inches.
c. Spread topsoil to a minimum depth of 4 inches where grading operations have left less than 4 inches of topsoil in place.
d. Grade topsoil to bring areas to grades as indicated, to ensure that all surfaces are left in an even and properly compacted condition, and to prevent ponding of water in depressions.
2. Cleanup:
a. Clean surface free of all stones or other objects larger than 2 inches in least dimension, all roots, brush, wire, grading stakes, and other objectionable materials.
b. Keep paved areas clean and promptly remove rock and dirt dropped upon surfacing.

3.06 RIPRAP:

A. Foundation Preparation:
1. Uniformly trim and dress areas on which filter blankets are placed, conforming to cross sections indicated within an allowable tolerance of ±1 inch from indicated slope lines and grades of subgrade.
2. Fill areas below tolerance limit with suitable material and compact.
3. Do not place riprap until the base has been accepted by Engineer.

B. Placement of Filter Blanket Materials:
1. Place on slopes within limits as indicated.
2. Spread material uniformly on prepared base, in a neat and satisfactory manner to a thickness of 6 inches.
3. Place and spread material by methods which will not segregate particle sizes within the filter.
4. Any damage to surfaces of filter blanket foundation during placing of filter blanket material shall be repaired before proceeding with the Work.
5. Compaction of filter blanket material will not be required, but it shall be finished to present a reasonably even surface free from mounds, depressions, or windrows.

C. Placement of Riprap:
1. Trim and dress areas requiring riprap to conform with lines as indicated within an allowable tolerance of 3 inches from indicated slope lines and grades of filter blanket material. (When regrading is required, existing geotextile fabric shall be removed and then replaced when slope meets specified tolerance.)
2. Place stone to full course thickness in one operation and in a manner to avoid displacing underlying material or damaging geotextile fabric.

3. Place stone on prepared base to produce a reasonably well-graded mass of stone in close contact and with a minimum of voids.
4. Place within a tolerance of ±3 inches from the theoretical slope lines and grades.
5. Finished riprap shall be free from pockets of small stones and clusters of larger stones. Hand place if necessary to secure the desired results.
6. Maintain riprap protection until accepted; replace any material displaced.

3.07 MAINTENANCE:

A. Protect newly graded and topsoiled areas from actions of the elements.
B. Fill and repair settling or erosion occurring prior to acceptance of the Work, and reestablish grades to required elevations and slopes.
C. Contractor shall be responsible for maintaining seed and straw until seed growth is established to the satisfaction of the City and the Engineer.
D. Under provisions of the guarantee, correct any settlement of embankment, fill, or backfill and damages created thereby within one year after acceptance of the Work. Make repairs within 10 days after notification by the City of settlement.

3.08 FIELD QUALITY CONTROL:

A. Compaction:
   1. The City will, through services of an independent laboratory, test all embankments, fills, and subgrades under this Contract to determine conformance with specified density relationships.
   2. Method of test may be either of the following at Engineer's option:
      a. ASTM D1556/D1556M.
      b. ASTM D2167.
      c. ASTM D6938.
   3. The frequency of in-place compaction testing including density and moisture content will be as follows:
      a. At least one test for every 1,000 yds.^{3} of material placed in a mass fill.
      b. At least one test for every 200 yds.^{3} of fill placed in trenches or surrounding structures.
      c. At least one test per 2,500 ft.^{2} per lift of compacted soil liner or fill in roadbed.
      d. At least one test for every 2,500 ft.^{2} of subgrade for fill or soil liner.
      e. At least one test for every 100 ft. of roadway for road subgrades and crushed rock base course.
      f. At least one test for every 500 ft.^{2} per lift in structural fill or on subgrades for foundations.
      g. At least one test for every shift of compaction operations on a mass fill.
   4. At least one test when Engineer suspects quality of moisture control or effectiveness of compaction. Remove or scarify fill failing to meet required densities and recompact as necessary to achieve specified results.
   5. Removal of in-place material and replacement with approved new material will be required if scarifying and recompaction do not produce the required densities.
   6. Perform at least one classification test (ASTM D2487) and one moisture-density test (ASTM D698) on soil used in fill or backfill operations during construction.
      a. Each sample shall be taken from trenches or other excavations as directed by Engineer and should be generally representative of distinguishably differing materials encountered and used for backfill or fill.
      b. Perform one set of tests at the beginning of excavation and one additional set of tests when material properties vary from the material initially tested.
      c. Additional tests shall be performed when directed by Engineer.

SECTION 312050 – SITE PREPARATION AND EARTHWORK: continued

B. Controlled Low-Strength Material (CLSM):
   1. Determine unconfined compressive strength using cylinders of CLSM sampled, handled, cured, and tested in accordance with ASTM D4832. Perform a minimum of one set of four cylinders for every 150 yds.^{3} of CLSM placed but not less than one set for each day's placement, unless otherwise directed by Engineer.
   2. Determine bearing strength, if required by Engineer, using penetration testing in accordance with ASTM C403/C403M.
   3. Test flow of CLSM, if required by Engineer, in accordance with ASTM C939/C939M.

C. Subgrades:
   1. Engineer will inspect all subgrades to determine conformance with indicated lines and grades.
   2. Subgrades for roadways, drives, parking areas, and railroads shall have a maximum deviation of not more than 1/2 inch in any 10 ft. when tested with a 10 ft. straightedge applied parallel with and at right angles to centerlines of subgrade areas. Actual grade shall not be more than 0.1 ft. from indicated grade.

END OF SECTION 312050

This page was intentionally left blank.

SECTION 329200 – SEEDING AND SODDING

PART 1 - GENERAL

1.01 SUMMARY:

A. This Section includes seedbed and sod bed preparation, seeding, sodding, mulching, and fertilizing of areas indicated and/or disturbed by Contractor's construction activities.

B. Maintenance of seeded and sodded areas.

1.02 RELATED REQUIREMENTS:

A. Section 312050 - Site Preparation and Earthwork.

1.03 REFERENCE STANDARDS:

A. Applicable Standards:

1. American Society for Testing and Materials (ASTM): Equivalent AASHTO standards may be substituted as approved.
   a. D977 – Emulsified Asphalt.

1.04 SUBMITTALS:

A. General: Submit each item in this Article according to the Conditions of the Contract and Division 1 Specification Sections.

B. Certificates: Includes, but not limited to, the following:

1. Seed shall be accompanied by certificate from vendor that seed meets requirements of these Specifications. Original hardcopy shall be submitted to the City for approval.
2. Fertilizer shall be accompanied by certificate from vendor that fertilizer meets requirements of these Specifications. Original hardcopy shall be submitted to Engineer or the City for approval.

PART 2 - PRODUCTS

2.01 FERTILIZER:

A. Fertilizer shall be a standard commercial grade.

1. Uniform in composition.
2. Shall be free flowing and suitable for application with approved equipment.
3. Shall be spread by mechanical means.

B. Deliver to Site in labeled bags or containers.

2.02 SEED:

A. Provide fresh, clean, new crop seed complying with tolerance for purity and germination established by Official Seed Analysts of North America and as required below.

B. Seed shall conform to all applicable laws of the State of Missouri.

C. Seed shall be labeled according to the U.S. Department of Agriculture Federal Seed Act and shall be furnished in containers with tags showing seed mixture, purity, germination, weed content, name of seller, and date on which seed was tested.

1. Seed Mixture:
   a. Meet the following minimum percentage requirements for purity and mix ratio:

Common and Botanical Name	Minimum Pure Live Seed (%)	Rate of Pure Live Seed (Pounds per Acre)
Alta Fescue or Kentucky 31 Fescue (Festuca Elatior, variation Arundinces)	75	100
Rye Grass (Lolium perenne or L. Multiflorum)	80	25
Kentucky Blue Grass (Pac Pratensis)	75	15
Creeping Red Fescue (Festura Ruera)	85	10
Total		150

2. Moldy seed or seed that has been damaged in storage shall not be used.

2.03 MULCH:

A. Vegetative Mulch: Mulch shall be straw from stalks of wheat, rye, or oats and shall be free of noxious and undesirable seed and material. Hay shall not be used as a mulching material. Mulch shall be preferably from the previous year's crop and shall be partially decomposed.

B. Tackifiers:
   1. Asphalt Emulsion: Conform to ASTM D977, Type SS-1.
   2. Polymeric Glue: HydroBond^{TM} as manufactured by JRM Chemical or approved equal.

C. Wood Cellulose Fiber:
   1. Fiber shall be produced from nonrecycled wood such as wood chips or similar wood materials and shall be of such character that the fiber will disperse into a uniform slurry when mixed with water. Fiber shall not be produced from sawdust, paper, cardboard, or other recycled materials.
   2. Mulch shall not contain germination or growth-inhibiting ingredients.
   3. Mulch shall be dyed an appropriate color to aid in visual inspection.
   4. Mulch material shall be easily and evenly dispersed when agitated in water.
   5. Supply in packages of not more than 100 pounds gross weight, and be marked by the manufacturer to show the air-dry weight content of the wood cellulose fiber.
   6. Mulch shall not be water-soluble and shall comply with the following properties:
      a. Moisture content: 15% maximum.
      b. Organic matter: Wood fiber (oven-dried basis), 90% maximum.
      c. pH: 4.3 to 8.5.
      d. Water holding capacity (grams of water/100 grams fiber), minimum: 1,000.
   7. Submit wood cellulose fiber material and application rates for approval by Engineer or the City.

2.04 EROSION-CONTROL:

A. Jute Netting:
   1. Netting shall consist of a uniform, open, plain-weave mesh of smolder-resistant, unbleached single jute yarn.
   2. Yarn shall be of loosely twisted construction and shall not vary in thickness by more than

one-half its normal diameter.

3. Jute mesh shall be furnished in rolled strips and shall be as follows:
   a. Minimum width of 42 inches.
   b. 76 warp ends per width (tolerance +3).
   c. 41 weft ends per yard (tolerance +3).
   d. Weigh not less than 0.9 pound per square yard.
4. Overlap blanket ends by 7 inches and edges by 4 inches.
5. Anchor the blanketing per manufacturer's recommendations. Size and material of blanket anchors shall meet the manufacturer's recommendations.
6. All erosion-control blanketing shall be laid within 24 hours of seeding application.
7. Submit jute netting material sample and installation instructions for approval by Engineer or the City.

B. Plastic Netting:
1. Netting shall be an extruded rectangular mesh plastic:
   a. Color: Black or green.
   b. Weight: 2.6 lbs./1,000 sq. ft. (+1/2 lb.).
   c. Width: 3-3/4 feet.
   d. Mesh Opening: 3/4 inch by 1 inch approximately.
2. Netting shall be rolled on a 3-inch outside-diameter cardboard core and paper wrapped in trailer loads or less.
3. Netting shall be as manufactured by Conweb Corp. or approved equal.
4. Overlap blanket ends by 7 inches and edges by 4 inches.
5. Anchor the blanketing per manufacturer's recommendations. Size and material of blanket anchors shall meet the manufacturer's recommendations.
6. All erosion-control blanketing shall be laid within 24 hours of seeding application.
7. Submit plastic netting material and installation instructions for approval by Engineer or the City.

C. Excelsior Blanket:
1. Excelsior blanket shall consist of machine-produced mat of curled wood excelsior of 80% 6-inch or longer fiber lengths, with consistent thickness and fibers evenly distributed over the entire area of the blanket.
   a. The top side of each blanket shall be covered with netting having a maximum mesh size of 1-1/2 by 3 inches, composed of cotton cord, twisted Kraft paper yarn, or biodegradable extruded plastic mesh.
   b. The blanket shall be furnished in rolled strips and shall be as follows:
      (1) Minimum width: 48 inches.
      (2) Minimum dry weight: 0.8 pound per square yard.
      (3) Smolder resistant.
   c. Overlap blanket ends by 7 inches and edges by 4 inches.
   d. Anchor the blanketing per manufacturer's recommendations. Size and material of blanket anchors shall meet the manufacturer's recommendations.
   e. All erosion-control blanketing shall be laid within 24 hours of seeding application.

D. Erosion-Control Fabric:
1. Fabric shall be "Hold Gro" erosion-control fabric as manufactured by Gulf States Paper Corporation or an approved equal.
2. Fabric shall be furnished in rolled strips with a 4-foot minimum width and an area of 200 square yards.
3. Approximate weight of fabric shall be 0.2 pound per square yard.
4. Overlap blanket ends by 7 inches and edges by 4 inches.
5. Anchor the blanketing per manufacturer's recommendations. Size and material of

blanket anchors shall meet the manufacturer's recommendations.

6. All erosion-control blanketing shall be laid within 24 hours of seeding application.

2.05 SOD:

A. Sod shall be at least three years old and densely rooted.

B. Cut sod in strips of uniform thickness with a minimum thickness of 1-1/2 inches.

1. Each strip shall contain at least one-half (1/2) but not more than one square yard.
2. Strips shall be not less than 12 inches in width.

C. At the time of sodlifting, the top growth shall not exceed 3 inches in length.

D. Moisten sod to depth at which it is to be cut when stripped during dry periods.

PART 3 - EXECUTION

3.01 SEEDBED AND SODBED PREPARATION:

A. Dispose of any growth, rocks, or other obstructions which might interfere with tilling, seeding, sodding, or later maintenance operations.

B. Thoroughly loosen and pulverize topsoil to a depth of at least 3 inches. Minimum depth of topsoil at seeded areas shall be 4 inches.

C. Maintain tilled areas until seeded and mulched, or sodded, to provide a smooth area with no gullies or depressions.

3.02 APPLICATION - FERTILIZER:

A. Apply fertilizer at the rate of 300-325 pounds per acre to properly prepared seedbeds and areas that are to receive sod.

B. Incorporate fertilizer into the soil to a depth of at least 2 inches by disking, harrowing, or raking. Fertilizer may be applied hydraulically on slopes 2 horizontal to 1 vertical or steeper. If fertilizer is applied hydraulically to these slopes, incorporation into the soil will not be required.

3.03 APPLICATION - SEED:

A. Dry Seeding: Accomplish sowing by use of approved equipment, having drills no more than 4 inches apart.

1. Drill seed to an average depth of 1/2 inch.
2. Overlap successive seed strips to provide uniform coverage. Repeat where skipped areas appear after a show of green.
3. Cover seed with soil to an average depth of 1/4 inch by raking or other approved methods.

B. Hydraulic Seeding: Mix seed with water and constantly agitate. Do not add seed to water until immediately prior to application. Do not let seeds remain in tank for more than 30 minutes.

1. On slopes flatter than 2 horizontal to 1 vertical, apply seed separately from fertilizer. Mechanically incorporate fertilizer into the soil prior to seeding activities. Cover seed with either hydraulic mulch or soil. If hydraulic mulching is not used, cover seed with soil to an average depth of 1/4 inch by raking or other approved methods.
2. On slopes 2 horizontal to 1 vertical and steeper, seed and fertilizer may be applied in a single operation. Incorporation into the soil will not be required. Hydraulic mulching will be required.

C. Seasonal Limitations: Perform seeding only during the following seasons:

1. The City prefers seeding be done between September 1 and October 30, if possible.
2. If the time period above is not possible, the City's second choice would be seeding

between March 1 and June 15. March or April would be preferable for this option.

D. Temporary Seeding: The City may require temporary seeding outside of the limits specified herein. In this case, the Contractor will be required to submit a temporary seeding mixture for City Approval.

3.04 APPLICATION - MULCH:

A. Apply mulch covering to all seeded areas within 24 hours after seeding. Mulch is not required on areas that are to be covered by an excelsior blanket or by an erosion-control fabric. Jute netting alone will not be considered an erosion-control fabric.

B. Apply vegetative mulch at the rate of 2.5 tons per acre by means of a mechanical spreader or other approved methods.

C. Apply wood-cellulose-fiber mulch hydraulically at the rate of 2,000 pounds per acre.
   1. Mulch and seed may be applied in a single operation on slopes 2 to 1 or steeper.
   2. Apply mulch to achieve a uniform coverage of the soil surface.

D. Vegetative Mulch with Asphalt Emulsion:
   1. Temperature of mulch at time of application shall be between 125 and 175°F.
   2. Mulching machine shall inject emulsified asphalt at the proper rate directly into the air stream carrying the straw.
   3. Hand-spray near structures.

E. Immediately following the application of the mulch, water the seeded area in one watering, at a rate of 120 gallons per 1,000 square feet. Perform so as not to cause erosion or damage to the seeded surface.

3.05 APPLICATION - EROSION CONTROL:

A. Install netting or seeding mats in lieu of seed and straw on all ditches or slopes 3 to 1 or greater. Install netting immediately following mulching operations. Water the seeded area at a rate of 390 gallons per 1,000 square feet.

B. Roll netting, excelsior blanket, or erosion-control fabric loosely over the required areas. Lifting and stretching of the material will not be permitted.

C. Secure netting, excelsior blanket, or erosion-control fabric by staples spaced as per manufacturer's recommendations.

D. Lap joints in the direction of water flow with at least a 4-inch overlap.

E. Any seeded or mulched areas disturbed by the installation of the netting, excelsior blanket, or erosion-control fabric shall be repaired at the Contractor's expense.

3.06 APPLICATION - SOD:

A. Prior to placing sod, the soil surface shall be worked until it is relatively free from debris, washes, gullies, clods, and stones. Surface shall be worked to a depth of not less than 3 inches with a disk, tiller, or other equipment approved by the Engineer.

B. Fertilizer shall be placed prior to placement of sod.

C. Handle sod with care to prevent loss of native soil from roots.

D. Do not use frozen sod.

E. Do not place sod on frozen ground.

F. Sod shall be moist at the time it is placed.

G. Lay sod strips along contour lines, by hand, commencing at the base of the area to be sodded and working upward.
   1. Carefully lay sod to produce tight joints.
   2. Stagger transverse joints of sod strips.

H. Firm, water, and refirm sod immediately after it is placed.
   1. Accomplish firming by application of a smooth-wheel roller weighing not less than 60 or

more than 90 pounds per linear foot of roller.

I. On slopes of 3 horizontal to 1 vertical and steeper, anchor sod by wooden pegs after sod has been firmed.
   1. Pegs shall be 1/2 inch by 12 inches, driven into the ground on about 2-foot centers.
   2. Top of peg after driving shall be not less than 1/2 inch but not more than 1 inch above top of sod.

3.07 MAINTENANCE:

A. Mow grass to a height of 2 inches whenever average height of grass exceeds 5 inches.
B. Remove weeds by approved chemical treatment.
C. Erect and maintain signs or barricades to exclude traffic from seeded or sodded areas.
D. Seeded Areas: Contractor to perform maintenance until seed growth is fully established and the city approves.
   1. Water as required by good practice during the three-month maintenance period or until accepted by Engineer.
   2. Prior to acceptance, repair at Contractor's expense any portion of the seeded surface which becomes gullied or otherwise damaged or destroyed.
   3. To be acceptable, seeded areas shall have a good, uniform color and sturdy growth with no bare soil spots, over a minimum of 98% of the area seeded.
E. Sodded Areas: Perform maintenance for a period of three months after planting unless the desired cover is obtained in a shorter time and the shorter period of Contractor's responsibility is authorized by Engineer.
   1. Thoroughly water sodded areas daily for a period of 15 days after placing.
   2. Maintain sod in good live condition. Prior to acceptance, replace any sod not in good growing condition with fresh live sod at Contractor’s expense.
   3. Water thoroughly whenever sod shows evidence of excessive drying until sod is accepted.
   4. To be acceptable, sodded areas shall have a good, uniform color and sturdy growth with no bare soil spots, over a minimum of 98% of the area sodded.

3.08 MEASUREMENT AND PAYMENT:

A. Time of Completion: Completion time for seeding and sodding shall not apply to provisions for liquidated damages with respect to Contract completion time. Payment for seeding and sodding will be withheld until such Work is accepted.
B. Measurement and payment will be as directed in the Contract documents.

END OF SECTION 329200

This page was intentionally left blank.

SECTION 330130.11 – TELEVISION INSPECTION OF SEWERS

PART 1 - GENERAL

1.01 SCOPE OF WORK:

A. Each designated pipe section shall be visually inspected by means of closed circuit television (CCTV) prior to starting any rehabilitation work. Each installed CIPP Liner and Service Connection Liner shall be inspected by means of CCTV for acceptance. Inspections shall be performed on one sewer segment (i.e. manhole to manhole) at a time.

B. Video recordings shall be made of the CCTV inspections and shall be submitted via the internet using the directions stated herein.

C. Gravity sewer segments shall be named based on the upstream and downstream manholes. For example, a gravity sewer main with flow entering from SMH1359 and discharging to SMH1358 shall be designated SMH1359_SMH1358.

1.02 SUBMITTALS:

A. All CCTV inspection shall be recorded in digital, color format as the Work is being conducted. Submit all videos along with inspection logs for review as the Work is being submitted for payment. Transmit copies of the videos and inspection logs via Email, Dropbox or USB and hard copy.

B. Both written and video reports shall use nomenclature as standardized by NASSCO's PACP to list defects found in the pipe.

C. For each CCTV uploaded via Dropbox, complete the CCTV record log on an approved Project Management Information System (PMIS).

D. Pre-Installation CCTV will be reviewed as an Informational Submittal. Post-Installation CCTV will each be reviewed as an Action Submittal. Include the appropriate suffixes in each sewer segment name.

1. "CIPP" for all segments to be lined
2. "PRE" for Pre-Installation CCTV (Example: SMH1359_SMH1358-CIPP-PRE, identifies CCTV inspection prior to installation of CIPP in the mainline sewer.)
3. "PST-CMP" for Complete Post-Lateral CCTV (Example: SMH1359_SMH1358-CIPP-PST-CMP, identifies CCTV inspection of CIPP in the mainline sewer, service lateral connection liners, and all repairs.)

1.03 RELATED WORK:

A. Cured-in-Place Pipe Lining is specified in Section 330130.72.

B. Removal of Protruding Service Connections in Section 330130.43

PART 2 -PRODUCTS

2.01 EQUIPMENT:

A. The CCTV camera used for the inspection shall be one specifically designed and constructed for such inspection. Lighting for the camera shall be suitable to allow a clear picture for the entire periphery of the pipe. The camera shall be operative in 100 percent humidity conditions. The CCTV camera shall be equipped with a pan and tilt head. The camera, television monitor and other components of the video system shall be capable of producing a minimum 470-line resolution video picture. Picture quality and definition shall be to the satisfaction of the Engineer and if unsatisfactory, equipment shall be removed, and no payment made for an unsatisfactory inspection.

B. The CCTV camera shall be moved through the line at a uniform rate, but in no case shall the CCTV camera be moved at a speed greater than 30 feet per minute. Transporters, manual winches, power winches, TV cable, and powered rewinds or other devices that do not obstruct the camera view or interfere with proper documentation of the sewer conditions may be used to move the camera through the sewer. A lateral launching camera is not required for inspection of service lateral connections.

C. Whenever non-remote powered and controlled winches are used to pull the television camera through the line, telephones, radios, or other suitable means of communication shall be set up between the two manholes of the sewer line being inspected to ensure good communications among members of the crew.

D. Accurate measurements are crucial. Measurements for locations of defects shall be below ground by means of a meter device. Marking on cable, or the like, which would require interpolation for depth of manhole, will not be allowed. Measurement meters shall be accurate to a foot over the length of the sewer line section being inspected. Accuracy of the measurement meters shall be checked daily above ground by use of a walking meter, roll-a-tape, or other suitable device.

E. All television work shall be recorded in digital format as the work is being conducted.

PART 3 - EXECUTION

3.01 PRE-INSTALLATION PROCEDURE:

A. Move the camera through the line from upstream to downstream, stopping when necessary to locate service connections and ensure proper documentation of sewer main conditions, point repair locations, point repair joints, and service lateral conditions at the sewer main. Contractor shall be responsible for verifying each service connection as being active or inactive. If, during the inspection operation, the television camera will not pass through the entire sewer line section, the equipment shall be removed and repositioned in a manner so that the inspection can be performed from the opposite manhole. If, again, the camera fails to pass through the entire sewer line section, the Contractor shall remove the obstruction through heavy cleaning or by excavation and replacement of that section of pipe as directed by the Engineer.

B. At least 2/3 of the pipe diameter must be visible during CCTV inspection. The Contractor shall accomplish this visibility requirement through plugging or bypass pumping as necessary.

C. All CCTV videos for the project shall remain the property of the City once issued into the PMIS. If videos are deemed to be of inferior quality or coverage as determined by the engineer, the contractor shall be required to re-inspect and re-video that video at no extra cost.

3.02 POST-INSTALLATION PROCEDURE:

A. Prior to the start of post-installation CCTV inspection of each sewer section, isolate the section and make a cleaning pass to remove debris and excess water. Move the camera through the line from upstream to downstream, stopping when necessary to ensure proper documentation of any defects in the installed liner. Stop and rotate the camera to inspect results of service lateral reinstatement and identify subsequent installation of service lateral connection liners or service lateral connection repairs. At each stop to identify a defect or lateral reinstatement, also identify on screen the distance from upstream manhole and clock position.

B. Repeat the procedure after installation of service lateral connection liners, service lateral connection repairs, and sewer main liner repairs.

C. Within 30 days following the completion of all rehabilitation work associated with each gravity sewer main, the contractor shall issue the PST-CMP CCTV video.

3.03 RECORDING OF FIELD OBSERVATIONS:

A. Television Inspection logs
   1. Provide Pre-Installation CCTV inspection logs which clearly show the locations, in relation to adjacent manholes, of service connections, roots, cracked or collapsed sections, presence of scale and corrosion, sewer line sections that the camera failed to pass through, and reasons for the failure and other discernible features.
   2. Provide Post-Mainline CCTV inspection logs which clearly show the locations, in relation to adjacent manholes, of discernible defects in the liner. Inspection logs shall include a list of all service laterals abandoned or reconnected.
   3. Provide Post-Lateral CCTV Inspection logs which clearly show installation of service lateral connection liners, service lateral connection repairs, and sewer main liner repairs.
   4. CCTV Inspection Logs shall include the following information.

DATE	TIME
PROJECT NAME	PROJECT NUMBER
OPERATOR NAME	
STREET OR LOCATION	
UPSTREAM MANHOLE	DOWNSTREAM MANHOLE
DIRECTION OF INSPECTION	
PIPE DIAMETER	PIPE MATERIAL

B. Photographs
   1. Digital photographs of problem areas shall be taken as directed to document unusual, questionable, or severe conditions found during the course of the Work. Provide image files at lateral locations.

C. Digital Recordings
   1. Motion playback features shall be supplied at the option of the Contractor. Digital recordings shall be made in color.

3.04 SUBMITTAL OF CCTV:

A. CCTV shall be submitted electronically via Email, Dropbox, or USB or by hard copy as approved by the City.

3.05 CREATING A PMIS RECORD:

A. Once the CCTV is submitted and uploaded, create a record of the CCTV submittal in the approved PMIS.

END OF SECTION 330130.11

This page was intentionally left blank.

SECTION 330130.41 – CLEANING OF SEWERS

PART 1 - GENERAL

1.01 SCOPE OF WORK:

A. Furnish all labor, materials, equipment and incidentals required to perform high pressure water jetting, cleaning, rodding, brushing, root cutting and flushing of designated sewer lines and sewer service laterals prior to internal inspection by closed circuit television, cured-in-place lining operations, and/or grouting.

1.02 RELATED WORK:

A. Television Inspection of Sewers is included in Section 330130.11.
B. Removal of Protruding Service Connections is included in Section 330130.43.
C. Cured-in-Place Pipe Lining is included in Section 330130.72.

PART 2 - PRODUCTS

2.01 EQUIPMENT:

A. Hydraulic Sewer Cleaning Equipment
   1. The equipment used shall be of a movable dam type and be constructed so that a portion of the dam may be collapsed at any time during the cleaning operation to protect against flooding of the sewer. The movable dam shall be the same diameter as the pipe being cleaned and shall provide flexible scraper around the outer periphery to ensure total removal of grease. If sewer cleaning balls or other such equipment which cannot be collapsed instantly are used, special precautions against flooding of the sewers and public or private property shall be taken.

B. High Velocity Jet (Hydrocleaning) Equipment
   1. The equipment shall have a selection of two or more velocity nozzles. The nozzles shall be capable of producing a scouring action from 15 degrees to 45 degrees in all sewer lines and manholes to be cleaned. Equipment shall also include a high velocity gun for washing and scouring manhole walls and floor. The gun shall be capable of producing flows from a fine spray to a long-distance solid stream. The equipment shall carry its own water tank, auxiliary engines, pumps and hydraulically driven hose reel. All controls shall be located so the equipment can be operated above ground.
   2. High velocity sewer cleaning equipment shall include a lateral cleaning launcher to clean service laterals from the mainline sewer.

C. Mechanical Cleaning Equipment
   1. Bucket machines shall be in pairs and with sufficient power to perform the work in an efficient manner. Machines shall be belt operated or have an overload device. Machines with direct drive which could cause damage shall not be acceptable.
   2. Power rodding machines shall be either sectional or continuous type capable of holding a minimum of 750 feet of rod. The rod shall be specifically treated steel. To ensure safe operation, the machine shall have a fully enclosed body and an automatic safety release clutch or relief valve.
   3. Root cutting machines shall be capable of removing roots such that cured-in-place pipe lining can be installed per manufacturer's recommendations.

PART 3 - EXECUTION

3.01 GENERAL:

A. Contractor is solely responsible for its means and methods of sewer and service lateral cleaning. Selection of cleaning equipment and the method for cleaning shall be based on the condition and/or pipe material of the sewer segment at the time work commences and shall comply with this Specification. FLUSHING OF ANY SANITARY SEWER TO FACILITATE CLEANING ACTIVITIES WITHOUT THE CAPTURE OF SOLIDS AND DEBRIS IS EXPRESSLY PROHIBITED.

B. Sewer line walls shall be cleaned adequately to discern structural defects, misalignment, and infiltration/inflow sources during CCTV inspection.

C. Start the cleaning operation with the upstream sewers in the system and proceed downstream with the direction of flow.

D. The City will furnish water for sewer pipe cleaning. A hydrant meter shall be secured by the contractor for purposes of tracking water used.

3.02 SAFETY:

A. Contractor shall be solely responsible for safety during the performance of all work. Take precautions to protect the sewer segments and appurtenances from damage that might be inflicted upon them by the use of cleaning equipment. Any damage inflicted upon a sewer segment or other public or private property as a result of the Contractor's cleaning operations, regardless of the cleaning method used and regardless of any other circumstance which may contribute to the damage, shall be repaired by the Contractor at no additional cost to the City.

B. Perform all work in accordance with the latest OSHA confined space entry regulations. Whenever hydraulically propelled cleaning tools, which depend upon water pressure to provide their cleaning force, or any tools which retard the flow of water in the sewer segment are used, take precautions to ensure that the water pressure utilized does not result in any damage or flooding to public or private property being served by the sewer segment(s) involved.

3.03 PREPARATION:

A. Selection of cleaning equipment shall be based on the condition of the pipe at the time the work commences. The equipment and methods selected shall be acceptable to the Engineer; however, acceptance of proposed method of cleaning does not relieve the Contractor of their responsibility to adequately clean the pipe to allow performance of other work.

1. The Contractor shall use high pressure water jetting equipment wherever possible.
2. The Contractor shall utilize mechanical or hydraulically propelled cleaning equipment where heavy cleaning is prescribed and where approved by the Engineer. Heavy cleaning of sewers and service laterals requires the contractor to perform the necessary cleaning passes with a high velocity jet nozzle and/or use of mechanical equipment for root/grease removal to achieve acceptable gravity sewer main preparation for CIPP lining. Equipment used for heavy cleaning shall be capable of removing scale, tuberculation, mineral deposits and roots (including root balls) from mainline sewers and service laterals. Authorization for heavy cleaning shall be based on the plans. Heavy cleaning conducted by the Contractor in sewers and service laterals not listed therein requires prior approval of the Engineer. If prior approval is not received, it shall be at the Contractor's expense.

3.04 PERFORMANCE:

A. Each designated sewer section and service lateral shall be cleaned prior to installation of the CIPP liner using hydraulically propelled, high velocity jet, or mechanically powered

equipment. Each service lateral shall be cleaned sufficiently to verify an active or inactive connection. The equipment selected for cleaning shall be capable of removing dirt, grease, rocks, sand, roots and other deleterious materials and obstructions from the sewer lines. If cleaning of an entire section cannot be successfully performed from one manhole, the equipment shall be set up on the other manhole and cleaning again attempted. If successful cleaning cannot be performed from the second manhole, or the equipment fails to traverse the entire length between manholes, it will be assumed that a major blockage exists and the cleaning effort shall be abandoned. Blockages, if any, shall be reported to the Engineer immediately.

B. During all sewer cleaning operations, satisfactory precautions shall be taken to protect the sewer or lateral lines from damage that might be inflicted by the improper use of cleaning equipment. Whenever hydraulically propelled cleaning tools which depend upon water pressure to provide their cleaning force or any tools which retard the flow of water in the sewer line are used, precautions shall be taken to ensure that the water pressure created does not cause any damage or flooding to public or private property being served by the pipe section involved. The flow of sewage in the sewer lines shall be used to provide necessary pressures for hydraulic cleaning devices whenever possible.

C. All sludge, dirt, sand, rocks, grease, roots and other solid or semisolid residue, debris, and material resulting from cleaning operations shall be removed at the downstream manhole of the section of sewer being cleaned. Passing material from manhole section to manhole section which could cause line stoppages, accumulations of sand in wet wells, or damage to pumping equipment shall not be permitted.

D. Procedures may include the use of mechanical devices such as rodding machines, expanding cutters, and porcupines, or hydraulic procedures such as high-pressure jet cleaners.

E. All debris, residue and other materials resulting from cleaning operations shall be removed from the site at the end of each workday and shall be disposed of in an approved manner. Under no circumstances will the accumulation of debris, residue, etc., on the site of work beyond the stated time be permitted, unless prior written authorization is given for storage in totally enclosed containers.

3.05 BLOCKAGES PREVENTING CLEANING:

A. If cleaning of an entire sewer section cannot be successfully performed from one manhole, equipment shall be set up on the other manhole and cleaning again attempted (a reverse set-up). No additional payment allowance shall be made for reverse set-ups. If on a reverse set-up, successful cleaning also cannot be performed or equipment fails to traverse entire sewer line section, it shall be assumed that a major blockage or defect exists, and cleaning effort shall be abandoned.

B. Contractor shall determine the location of major blockage(s) by measuring length of hose or rod inserted from manholes at each end and immediately report location of blockage(s) to Engineer and Contractor shall note these conditions in its field log.

C. Contractor shall recognize that there are some conditions such as broken pipe and major blockages that prevent cleaning from being accomplished or where damage could result if cleaning were attempted or continued. Engineer shall be immediately notified by Contractor of any and all conditions which in the opinion of Contractor warrant termination of cleaning activities. If Contractor's cleaning equipment becomes lodged in a sewer, it shall be removed by Contractor at his expense. This shall include excavation and repair of the sewer, underground utilities, backfilling, and surface restoration.

3.06 REMOVAL AND DISPOSAL OF MATERIALS:

A. All sludge, dirt, sand, rocks, grease and other solid or semi-solid residue, debris, and material resulting from cleaning operations shall be removed at the downstream manhole of the section

of sewer being cleaned by Contractor. Passing material from manhole section to manhole section which could cause line stoppages, accumulations of sand in wet wells, or damage to pumping equipment shall not be permitted. In the event that sludge, dirt, sand, rocks, grease and other solid or semi-solid residue, debris, or material passes to downstream sewer segment(s), Contractor shall be responsible for cleaning such downstream sewer segment(s) at no additional cost to City.

B. All debris, residue and other materials resulting from cleaning operations shall be removed from the site no less often than at the end of each workday and shall be disposed of off-site by the Contractor. Contractor shall be responsible for any testing of materials prior to disposal. Under no circumstances will the accumulation of debris, residue, etc. on the site beyond the stated time be permitted, unless prior written authorization is given for storage in totally enclosed containers.

C. Continuously remove debris from the downstream manhole during sewer cleaning. Do not allow debris to be passed into the downstream sewer. Decant excess cleaning water and direct it to the sewer downstream of the sewer being cleaned.

D. Under no circumstances shall the removed sewage or solids be dumped onto streets or into ditches, catch basins, storm drains, sanitary or combined sewer manholes, or otherwise improperly disposed. If sewage is unintentionally spilled, discharged, leaked or other deposited in the open environment, Contractor shall be responsible for any clean-up and disinfection of the affected area. Contractor shall comply with all Local, State and Federal regulatory requirements regarding spills.

3.07 FIELD TESTING:

A. Acceptance of sewer or lateral line cleaning shall be contingent on satisfactory completion of the television inspection. If television inspection shows the cleaning to be unsatisfactory, the sewer or lateral line shall be re-cleaned and re-inspected, as specified in Section 330130.11, until the cleaning is shown to be satisfactory, at no cost to the City.

END OF SECTION 330130.41

This page was intentionally left blank.

SECTION 330130.43 – REMOVAL OF PROTRUDING SERVICE CONNECTIONS:

PART 1 - GENERAL

1.01 SCOPE OF WORK:

A. Furnish all equipment, labor and materials necessary to internally remove protruding taps and obstructions in those sewers identified in the plans, or as directed by the Engineer.
B. Remove all taps to within 1/8-inch of the sewer line wall to eliminate interference with CIPP lining.
C. Where possible, complete removal of protruding taps, and obstructions before conducting sewer line cleaning and CCTV inspection. Where this is not possible, the Contractor shall ensure that the sewer is clean of all dirt and debris.
D. Dirt and debris resulting from protruding tap removal or obstruction removal shall not be allowed to enter the wastewater flow and be carried to downstream reaches. This material shall be removed and disposed in accordance with requirements of Section 330130.41.

1.02 RELATED WORK:

A. Cleaning of Sewers is specified in Section 330130.41.
B. Television Inspection of Sewers is specified in Section 330130.11.
C. Cured-in-Place Pipe Lining is specified in Section 330130.72.

PART 2 - PRODUCTS

2.01 EQUIPMENT:

A. Remove protruding taps using an internal, remote-controlled intruding pipe remover or service lateral reinstatement machine. Excavation and replacement of protruding taps will not be allowed except under special situations authorized in writing by the Engineer.
B. The equipment shall consist of a main body containing a rotating head assembly equipped with carbide cutting edges or a robotic crawler with extendable cutting arm and camera. The rotating cutting head shall be driven by air, water or an electric motor and shall be capable of cutting asbestos cement, concrete, PVC and other materials commonly used for pipe construction with the exception of cast iron and steel.
C. The equipment shall be accurately positioned using a TV camera in conjunction with the cutter assembly.

PART 3 - EXECUTION

3.01 PERFORMANCE:

A. Remove all protruding taps, and obstructions from sewers identified in the plans, or as directed by the Engineer.
B. Maintain a complete record of all taps that were removed and submit a list for information.
    1. The list shall show the date, sub-area, street, sewer reach (by manhole numbers), station and location (left, right or top) of each tap removed.
    2. The list shall also show similar data for any taps that were not successfully removed, as well as the reason why removal was unsuccessful.
C. Where an obstruction cannot be removed by cleaning, the Contractor may propose a method of removal by other means as an alternative to point repair. The Contractor must receive approval by the Engineer prior to proceeding.
D. Protect existing sewer lines and service connections from damage caused by improper use of the

SECTION 330130.43 – REMOVAL OF PROTRUDING SERVICE CONNECTIONS: continued

equipment. Damage to a sewer or service connection caused by removal of a tap or removal of an obstruction by other means shall be repaired immediately, as directed by the Engineer, at no additional cost to the City.

E. Remove and dispose of all dirt and debris from the sewer following completion of tap and obstruction removal in that reach as specified in Section 330130.11.

END OF SECTION 330130.43

This page was intentionally left blank.

SECTION 330130.72 – CURED-IN-PLACE PIPE LINING:

PART 1 – GENERAL

1.01 SCOPE OF WORK:

A. Furnish all labor, materials, equipment, and incidentals required to install and test the cured-in-place pipe (CIPP) lining and appurtenances complete and as specified herein, including, but not limited to services necessary for traffic control, bypass pumping and/or diversion of sewage flows, cleaning and television inspection of sewers to be lined, liner installation, reinstatement of service connections, quality control, providing samples for performance of required material tests, final television inspection, testing of lined pipe system and warranty work, all as specified herein.

B. Remove obstructions and protruding service connections as necessary to complete the CIPP rehabilitation prior to the pre-rehabilitation CCTV inspection.

C. Neither the CIPP system, nor its installation, shall cause adverse effects to any of the City's processes or facilities. The use of the product shall not result in the formation or production of any detrimental compounds or by-products in the system or at the wastewater treatment plant. The Contractor shall notify the Engineer and identify any by-products produced as a result of the installation operations. The Contractor shall test and monitor the levels of by-products and comply with any and all local waste discharge requirements. Clean up, restore existing surface conditions and structures, and repair any of the CIPP system determined to be defective. The Contractor shall conduct installation operations and schedule cleanup in a manner to cause the least possible obstruction and inconvenience to traffic, pedestrians, businesses, and property owners or tenants.

D. The Contractor shall not change any material, design values or procedural matters stated or approved herein, without written notification to the Engineer and receiving written approval of the change. Such changes shall result in rejection and removal of work performed with the unapproved materials or processes followed by rectification or replacement as directed by the Engineer, at no cost to the City.

E. This specification applies to CIPP lining installed by inversion and cured with hot water or steam.

1.02 RELATED WORK:

A. Television Inspection of Sewers is included in Section 330130.11.

B. Cured-in-Place Pipe Short lines are included in Section 330130.77.

1.03 SUBMITTALS:

A. Submit statement of qualifications, shop drawings, working drawings, product data, and information related to CIPP installation. Submit a statement of qualifications within 10 days of Notice to Proceed.

B. Submit a Statement of Qualifications for the installer performing CIPP work. The Statement of Qualifications shall include the following information:

1. A list of a minimum of five municipal clients that Contractor or CIPP Subcontractor has performed this type of work for without defects or performance problems for a period of five years after installation. The list shall contain the following:
   a. Names and telephone numbers of persons to be called to verify previous satisfactory performance.
   b. A full description of the actual work performed.
   c. Name of CIPP lining manufacturer and supplier for each referenced project.
2. Documentation of experience and references to demonstrate compliance with requirements of Paragraph 1.05 Qualifications.

SECTION 330130.72 – CURED-IN-PLACE PIPE LINING: continued

C. Submit documentation of experience and qualifications of the CIPP materials manufacturer(s) including the following information:
   1. Name(s) of liner manufacturer and supplier.
   2. A certified statement that the Contractor or CIPP Subcontractor is certified or licensed by the CIPP liner manufacturer as an approved installer.
   3. Product names and information for CIPP felt tubes and resin materials to be used in this project.
   4. Five reports from independent testing laboratory analysis of liner materials, for projects within past two years, showing: Modulus of elasticity as determined by appropriate ASTM standard and flexural stress as determined by ASTM D790 standard. Lining shall be of same resin system and felt tube materials as proposed for this project.
   5. Verifiable references that CIPP materials manufacturer(s) have successfully supplied a minimum of 500,000 linear feet of the proposed liner and one million pounds of resin.

D. Shop drawings, working drawings, and product data submittals required shall include the following information:
   1. Detailed information on the CIPP installation procedures (wet-out, heating, curing, and cool down, if applicable) and all tools and equipment required for a complete installation. Identify which tools and equipment will be redundant on job site in the event of equipment breakdown. Equipment to be furnished for the project, including proposed back-up equipment, shall be clearly described. Contractor shall outline the mitigation procedure to be implemented in the event of key equipment failure during the installation process.
   2. Shop drawings and product data to demonstrate compliance with these specifications and identify materials of construction (including resins, catalysts, felt, etc.), felt manufacturer, location of the felt manufacturing facility, location of the wet-out facility, etc., flexible membrane (coating) material (including recommended repair/patching procedure, if applicable).
   3. Manufacturers' shipping, storage and handling recommendations for all components of the CIPP System.
   4. Safety Data Sheets (SDS) sheets for all proposed products and materials to be furnished for the project.
   5. Detailed sample collection, laboratory testing and quality control procedures, including schedule and shipping and storage requirements.
   6. Written description and a plan for odor control that will ensure that project specific odors such as styrene will be minimized at the project site and surrounding area.
   7. The end seal material(s) and description of their installation.
   8. A detailed description of the Contractor's proposed procedures for removal of any existing blockages in the pipeline that may be encountered during the cleaning process.
   9. Data on the maximum allowable stresses and elongation of the liner during installation and the means in which the Contractor will monitor stress and elongation (i.e., ideal inversion head and maximum cold head, minimum inversion head, maximum hot head).
   10. A detailed public notification plan shall be prepared and submitted including detailed staged notification to residences affected by the CIPP installation. Coordinate with General Requirements.
   11. A complete description of the wet-out procedure for the proposed technology. Identify the wet-out facility where all CIPP liner will be manufactured for this project. All CIPP liners shall be manufactured at the designated wet-out facility. Multiple wet-out facilities will not be allowed.
   12. A detailed quality control plan (QCP) that fully represents and conforms to the requirements of these specifications. At a minimum, the QCP shall include the following:

a. A detailed discussion of the proposed quality control.
b. Defined responsibilities of the Contractor's personnel for assuring that all quality requirements for this contract are met. These shall be assigned to specific personnel.
c. Proposed procedures for quality control including those pertaining to fit and finish, and product sampling and testing.
d. Proposed methods for product performance controls, including method of and frequency of product sampling and testing both in raw material form and cured product form.
e. A schedule for performance and product test result reviews between the Contractor and Engineer at a regularly scheduled job meeting.
f. Inspection forms and guidelines for quality control inspections in accordance with the standards specified in this contract.

13. Design data and specification data sheets listing all parameters used in the CIPP liner design and thickness calculations based on ASTM F 1216 for "fully deteriorated gravity pipe conditions."

E. Submittals before, during and after CIPP installation work shall include the following:
1. Prior to each shipment of CIPP lining, submit certified test reports that the CIPP lining for this Contract was manufactured and tested in accordance with all ASTM Standards specified and referenced herein.
2. CIPP lining schedules including field-verified lengths and diameters of all CIPP lining, appurtenances, and map(s) that show insertion points for all CIPP installations, required to show that the contractor has physically measured every pipe to be rehabilitated.
3. Detailed installation procedures and manufacturer's recommended cure method for each diameter and thickness of CIPP liner to be installed, including CIPP lining production schedule, acceptable inversion heads and pressures, inversion procedures, curing and cool-down procedures detailing the curing rate of temperature increases and cool down and the method of application, and times for each stage of the process.
4. Wet-out forms/reports for each CIPP segment with detailed information including but not limited to: date and time of wet-out, wet-out facility address, volumes and/or weights of resin, length and diameter of CIPP liner (both wet-tube and dry-tube), roller gap settings, start times, finish times, resin used (product name and batch/shipment number) and quantity, gel times, resin injection locations, thickness of CIPP liner (dry and wet), catalyst(s) name and quantity used, and any other pertinent data documenting the wet-out for each section of CIPP liner manufactured. The wet-out forms shall be submitted during the week of installation as informational submittals.
5. Furnish copies of CIPP liner field curing reports documenting the liner installation for all sewer segments to the RPR on a daily basis. The CIPP liner reports shall document all details of liner installation, including manhole numbers, street names/sewer location, project number, date, time, ambient temperature, heads used during the inversion process, pressures and/or heads (minimum inversion pressure, ideal head, maximum hot head and maximum cold head) used during curing (including cool down if applicable), curing temperature, curing time, rate of cool down, CIPP liner thickness, etc. A sample report shall be submitted to the Engineer for approval prior to the installation of any CIPP lining.
6. Pre-rehabilitation and post-rehabilitation closed-circuit television (CCTV) inspection data as further defined herein. All CCTV inspection data shall be submitted with each payment request including payment for CIPP lining in place.
7. Samples of installed liner(s) for testing to be performed by an ASTM-certified independent testing laboratory, as described further herein.

8. Information on any grouts, epoxy, or cements proposed for sealing at manholes or for other uses.
9. The Contractor shall submit daily production reports to the Resident Project Representative at the end of each workday.
10. A list of all service laterals (with distances and clock position) that were abandoned or re-established as part of the work as further defined herein.
11. Some new CIPP installations may result in the need to repair or replace a defective CIPP. The Contractor shall submit in writing, for review by the Engineer, specific repair or replacement procedures for potential defects that may occur in the installed CIPP. Repair/replacement procedures shall be as recommended by the CIPP system manufacturer and shall include the following:
    a. Defects in the installed CIPP that will not affect the operation and long-term life of the product shall be identified and defined.
    b. Repairable defects that may occur in the installed CIPP shall be specifically defined by the Contractor based on manufacturer's recommendations, including a detailed step-by-step repair procedure, resulting in a finished product meeting the requirements of these contract specifications. Repairable defects may include but are not limited to blisters, wrinkles, fins, pinholes, over- or under-cut lateral connections, and any voids found between liner and the host pipe.
    c. Un-repairable defects in the CIPP shall be clearly defined by the Contractor based on the manufacturer's recommendations, including a recommended procedure for the removal and replacement of the CIPP. Un-repairable defects may include, but are not limited to, less than minimum thickness, insufficient structural strength, lifts, shrinkage, folds, bulges, and delamination.
12. A list of all repair or replacement of CIPP defects that were executed by the Contractor including identification of segment, location of the repair, and type of repair.

1.04 REFERENCE STANDARDS:

A. American Society for Testing and Materials (ASTM), latest edition.
    1. ASTM D790 - Standard Test Methods for Flexural Properties of Unreinforced and Reinforced Plastics and Electrical Insulating Materials.
    2. ASTM F1216 - Standard Practice for Rehabilitation of Existing Pipelines and Conduits by the Inversion and Curing of a Resin-Impregnated Tube.
B. National Association of Sewer Service Companies (NASSCO)
    1. NASSCO Pipeline Assessment and Certification Program (PACP) Reference Manual, current edition, including addenda.
C. Water Research Centre, UK
    1. Sewerage Rehabilitation Manual, Type II Design, WRc Publications
D. Where reference is made to one of the above standards, the latest revision/update in effect at the time of bid opening shall apply.

1.05 QUALIFICATIONS:

A. CIPP Installer performing the lining work shall be fully qualified, experienced and equipped to complete this work expeditiously and in a satisfactory manner and shall be certified and/or licensed as an installer by CIPP lining manufacturer.
B. Engineer reserves the right to approve or disapprove Superintendent and lead personnel based on submitted qualifications and a follow-up interview.

1.06 GUARANTEE:

A. CIPP lining placed shall be guaranteed by Contractor and manufacturer for a period of two years from date of Final Completion. During this period, serious defects discovered in CIPP lining, as determined by City and which may materially affect the integrity, strength, function and/or operation of pipe, shall be removed and replaced as recommended by the manufacturer in a satisfactory manner (to the City) by the Contractor at no cost to the City. The City may conduct an independent CCTV inspection, at its own expense, of CIPP lining work prior to completion of the warranty period. Defects replaced at that time shall be fully warranted by Contractor and manufacturer for a period of two years from date the defect is repaired. Wrinkles in flow stream, blisters that may affect the longevity of CIPP liner, dry spots where liner tube has no resin saturation, or other defects that may affect the integrity or strength of the CIPP or the flow capacity of the pipe, are unacceptable. Contractor shall be responsible to remove and repair, at no additional cost to the City, all such defects in a manner that is satisfactory to City. Defects also include but are not limited to the following:
   1. Leakage through the liner or between liner and pipe.
   2. Reduction of liner thickness of more than ten percent (10%) of the thickness designed and/or required. Final liner thickness shall be delivered by Contractor based on installed product physical properties and as specified in Contract requirements.
   3. Separation of liner from host pipe where an annular space is clearly noticed, shrinkages (longitudinal and/or circumferential), delamination of liner, cured lifts, dry spots, bulges due to external loading, reverse curvatures, splits, cracks, lifts, breaks, folds, wrinkles (as defined further herein), flats, pinholes, crazing and any other defects that in the CIPP lining will compromise the longevity of the installed product.
   4. Circumferential defects (wrinkle, fin, bulge, etc.) in the invert of pipe between 4:00 and 8:00 o'clock shall not exceed three percent of the host pipe diameter or 1/2-inches by visual measurement, whichever is smaller.
   5. Longitudinal wrinkles or fins shall not exceed maximum allowable height of five percent of equivalent host pipe diameter or 1-inch, whichever is smaller.
   6. Structural strength below the required limits

1.07 QUALITY ASSURANCE:

A. Install CIPP linings according to procedures in the quality control plan.

B. CIPP linings shall be furnished by a single manufacturer. Suppliers shall be responsible for provisions of all test requirements specified herein as applicable. In addition, CIPP lining to be installed under this Contract may be inspected at the plant for compliance with these specifications by an independent testing laboratory. Contractor shall require manufacturer's cooperation with these inspections. Cost of plant inspection of all CIPP lining approved for this Contract will be the responsibility of the Contractor.

C. Inspections of CIPP lining may also be made by the Engineer after delivery. CIPP lining shall be subject to rejection at any time on account of failure to meet any of the requirements specified, even though sample CIPP lining may have been accepted as satisfactory at the place of manufacture. CIPP lining rejected after delivery shall be marked for identification and shall be removed from the job site, at no cost to the City.

D. If an installation is rejected based on review of the post-rehabilitation CCTV inspection, the Contractor shall repair the sewer segment to the satisfaction of the Engineer at no additional cost to the City.

E. Along with the physical properties testing and post-installation CCTV survey, the Contractor shall deliver a certified copy of the curing log from the temperature monitoring system used in the control of the curing process for pipes.

SECTION 330130.72 – CURED-IN-PLACE PIPE LINING: continued

1.08 DELIVERY, STORAGE AND HANDLING:

A. Care shall be taken in shipping, handling and laying to avoid damaging the CIPP liner. CIPP liner damaged beyond repair in shipment shall be replaced to the City's satisfaction, at no cost to the City.
B. Any CIPP liner showing a visible split, tear, or defect, shall be repaired per manufacturer's recommendations and to the satisfaction of the Engineer or, if not possible, provide a new CIPP liner at no cost to the City.
C. While stored, CIPP shall be adequately supported and protected in a manner as recommended by manufacturer.
D. CIPP liner shall be maintained at a proper temperature in refrigerated facilities to prevent premature curing at all times prior to installation. CIPP liner shall be protected from UV light. CIPP liner showing evidence of premature curing will be rejected for use and shall be immediately removed from the site. Provide a new CIPP liner at no cost to the City.

PART 2 - PRODUCTS

2.01 CIPP FELT LINER AND RESIN:

A. CIPP liner shall be Insituform by Insituform Technologies, LLC, National Liner by National EnviroTech Group LLC, SAK Liner by SAK Construction LLC, or Engineer approved equal.
B. CIPP liner shall be composed of tubing material consisting of one or more layers of a flexible non-woven polyester felt with or without additives such as woven fiberglass or other fibers and meet the requirements of ASTM F1216, ASTM F1743, and ASTM D5813. Felt content of CIPP liner shall be determined by the Contractor but shall not exceed 15 percent of the total impregnated liner volume. Fabric tube shall be capable of absorbing and carrying resins, constructed to withstand installation pressures and curing temperatures and stretch to fit irregular pipe sections. Contractor shall submit certified information from felt manufacturer on normal void volume in the felt fabric that will be filled with resin.
C. CIPP liner tube may be made of single or multiple layer construction, with any layer not less than 1.5 mm thick, unless the tube is made of fiberglass material. Wet-out fabric tube shall have a uniform thickness and void space for resin distribution that when compressed at installation pressures will produce a predictable finished thickness that meets or exceeds the design thickness after cure.
D. No material shall be included in fabric tube that may cause de-lamination in cured CIPP. No dry or unsaturated layers shall be acceptable upon visual inspection as evident by color contrast between felt fabric and activated resin containing a colorant.
E. Wall color of interior pipe surface of CIPP after installation shall be a light reflective green color so that a clear detailed examination with closed circuit television inspection equipment may be made. Hue of the color shall be dark enough to distinguish a contrast between fully resin saturated felt fabric and dry or resin lean areas.
F. Seams in the fabric tube, if applicable, shall meet the requirements of ASTM D5813.
G. The outside layer of the tube shall be coated with an impermeable material compatible with the resin and fabric.
H. Resin: Shall be a corrosion resistant polyester or vinyl ester resin and catalyst system or epoxy and hardener system manufactured specifically for sewer rehabilitation, that, and when properly cured within the tube composite, meets the requirements of ASTM F1216, the physical properties herein, and those, which are to be utilized in the design of CIPP for this project. Resin shall produce CIPP that will comply with or exceed structural and chemical resistance requirements of this specification. Liner material and resin shall be completely compatible. Generally, resin shall not contain fillers, except those required for viscosity control or fire

retardance or increase strength, and with applications for which inert fillers would facilitate better heat transfer and retention during installation. Liner contractor may add up to 5 percent by mass, a thixotropic agent for viscosity control, which will not interfere with visual inspection.

I. Resins may contain pigments, dyes, or colorants, that interfere with visual inspection of cured liner. Quantity of resin used for tube impregnation shall be sufficient to fill volume of air voids in tube with additional allowances for polymerization shrinkage and loss of resin through cracks and irregularities in original pipe wall. Use serial vacuum impregnation or pressure impregnation process (or approved equal) to provide maximum resin impregnation throughout the tube.

J. Prior to inversion, outside and/or inside layer of tube shall be coated with an impermeable, flexible membrane that will contain the resin and facilitate, if applicable, vacuum impregnation and monitoring of resin saturation during the resin impregnation (wet out) procedure.

K. Exterior of manufactured tube shall have distance markings along its length at regular intervals not to exceed 5 feet. Use these marks as a gauge to measure elongation during insertion. Should overall elongation of a reach exceed 5 percent, liner tube shall be rejected and replaced.

L. Engineer may inspect CIPP liner during manufacturing and wet-out. Engineer shall be given an opportunity to witness manufacturing of all CIPP liner for this project. City is responsible for costs associated with witnessing the manufacturing of CIPP liner.

M. Upon request by the Engineer, Contractor shall provide full access to witness wet-out process and shall provide any and all information related to manufacturing without delay and without claims of confidentiality or product privacy.

N. Application of resin to felt tubing (wet-out) shall be conducted under factory conditions using vacuum impregnation and materials shall be fully protected against UV light, excessive heat and contamination at all times. If on-site wet out is required, Contractor shall be required to maintain ambient conditions similar to those encountered during factory wet outs.

O. Liners that are impregnated at the factory and transported to the project site in refrigerated trucks shall be installed as soon as possible and no more than two (2) weeks after the date of impregnation at the factory.

P. CIPP liner shall form a continuous, tight-fitting, hard, impermeable liner that is chemically resistant to any chemicals normally found in domestic sewage per ASTM F1216.

Q. CIPP liner tube shall be manufactured or fabricated to a size that will tightly conform to the internal circumference of sewer after being installed and cured. CIPP liner shall conform into irregularly shaped pipe sections and through bends and dips within the pipeline. Allowance for longitudinal and circumferential expansion shall be taken into account when sizing and installing CIPP liner. Liner shall be properly sized to diameter and length of existing pipe and be able to stretch to fit irregular pipe sections and negotiate bends. Contractor shall determine minimum tube length necessary to effectively span designated run between manholes. Contractor shall field verify lengths prior to ordering and resin impregnation of liner, to ensure that liner will have sufficient length to extend entire length of the sewer. Length of sewer is defined as the length of the existing host pipe measured from the interior walls of the manholes, and/or from the ends of the pipe when/if the pipe extends into the manholes. Contractor shall measure inside diameter and circumference of existing pipelines at face of each manhole in field prior to ordering liner so that liner can be installed in a tight-fitted condition with little or no wrinkling.

R. Length of CIPP liner shall be as deemed necessary by Contractor to effectively carry out insertion of CIPP liner and sealing of CIPP liner at outlet and inlet manholes. Required diameter and length of each pipe segment shall be measured in advance of wet-out and a list of these

measurements shall be submitted to Engineer at least one week prior to installation of each CIPP liner.

S. Contractor is responsible for ensuring that correct liner is installed in each sewer reach being rehabilitated.

T. Contractor shall verify proposed CIPP liner thicknesses and submit associated calculations. Actual cured liner thickness shall be -5/+10 percent of approved design thickness and shall not include thickness of any non-structural membrane (inner/pre- liner). CIPP liner shall be designed in accordance with applicable provisions of ASTM F1216 for "fully or partially deteriorated gravity pipe conditions". CIPP liner shall meet following design conditions, unless Engineer agrees, in writing, of their change:

1. AASHTO H 20 Live Load.
2. Constrained soil modulus of native soil in the pipe zone of 1,000 psi.
3. Soil weight of 120 pounds per cubic foot and a coefficient of friction of Ku'=0.130r shall be used for the installed depths.
4. Long-term flexural modulus used in design calculations shall be estimated by multiplying lowest short-term flexural modulus used in design calculations by a retention factor of 0.50 (i.e., long-term retention of mechanical properties equal to 50 percent.)
5. Design safety factor of 2.0.
6. Typical groundwater levels shall be estimated at one half (1/2) the distance between crown of pipe and ground surface. If actual groundwater depth information is available from USGS or other sources, it shall be utilized in calculations. Groundwater depth used in calculations should be from estimated maximum groundwater level from surface to invert of interior pipe or at elevation specified for bidding purposes in Contract Documents.
7. Service temperature range shall be 40 to 100 degrees F.
8. Minimum ovality of host pipe of 2 percent.
9. Long-term retention of mechanical properties equal to 50 percent.
10. Thickness to be used for CIPP liner shall be largest thickness as determined by calculations for deflection, bending, buckling and minimum stiffness.
11. CIPP liner thickness for non-round pipes or circular pipes with greater than 10% ovality shall be designed in accordance with WRc Sewerage Rehabilitation Manual, Type II Design.
12. Minimum liner thickness before installation and curing for all pipes and larger shall be per the table below or as designed, whichever is greater. Thicknesses following installation and curing shall be based on design calculations provided by Contractor.

Minimum Liner Thickness

Sewer I.D.	Pipe Invert Depth 0'-15'	Pipe Invert Depth Over 15'
6"	4.5 mm	6.0 mm
8"	6.0 mm	7.5 mm
10"	6.0 mm	7.5 mm
12"	7.5 mm	9.0 mm
15"	9.0 mm	10.5 mm

13. CIPP liner shall provide a minimum service life of 50 years and, for design purposes, shall have the following minimum initial and long-term properties:

Property	Test Method	Initial (psi)	Long Term (psi)
Flexural Strength	ASTM D 790	4,500	2,250

SECTION 330130.72 – CURED-IN-PLACE PIPE LINING: continued

Flexural Modulus of Elasticity	ASTM D 790	250,000*	175,000

*Minimum Initial Flexural Modulus of Elasticity for pipe diameters larger than 15 inches is 350,000 psi.

14. The CIPP shall be designed to withstand all imposed loads, including dead and live loads and, hydrostatic pressure. The liner shall have sufficient wall thickness to withstand all anticipated external pressures and loads that may be imposed after installation.

2.02 END SEALS:

A. End seals shall be composed of hydrophilic rubber and molded as a one-piece, three-inch wide cylinder which when installed will form a 360-degree seal between the host pipe and the newly installed liner. Use of caulking, rope or band type of an end seal shall not be allowed. Acceptable end seals are Insignia™ End Seals by LMK Enterprises or Engineer approved equal.

2.03 CIPP SHORT LINERS (CIPPSL):

A. Contractor shall install a sectional CIPPSL for areas where longitudinal shrinkage of the installed CIPP liner near the manholes is three inches or more, at no additional cost to the City, as specified in Section 330130.77.

PART 3 – EXECUTION:

3.01 PRE-INSTALLATION:

A. When available, examine City's CCTV video of each pipe segment before starting Work.

B. Notify all property owners or businesses that discharge sewage directly to sewer being lined and whose service lateral will be affected by lining work, that their service will be temporarily discontinued during installation of CIPP liner. Deliver written notification to each such resident or business at least 48 hours in advance, giving the date, start time and estimated completion time for the work being conducted, and any restrictions on use of sewage system facilities including exact days and hours when sewer system cannot be used. Method of notification and the text included in the notification shall be approved by the Engineer.

1. The maximum amount of time any home or business shall be without sanitary sewer service is 8 hours.
    a. Anything over 4 hours of out of service may require a pumping plan to be implemented.

C. Clean each length of pipe to be lined and dispose of all resulting material offsite as specified in Section 330130.41.

D. Conduct a pre-rehabilitation CCTV inspection of all sewers to be rehabilitated by CIPP lining methods in accordance with Section 330130.11. Inspection shall be for purpose of identifying defects in pipe, to document location of all service lateral connections, and to confirm point repair locations. The Contractor's project manager and/or superintendent shall review the pre-rehabilitation inspection videos to confirm the quality of the videos, locations of lateral connections, and locations of point repairs to be performed. Only after the Contractor has confirmed that the quality of the videos is adequate for a clear review of pipeline, shall the videos be submitted to the Engineer. Engineer will review pre-rehabilitation inspection photos to confirm locations of point repairs to be performed by Contractor. If a Resident Project Representative is on site or immediately available, Contractor shall allow the Resident Project Representative to view the pre-installation video to verify the pipe is ready for CIPP installation which includes proper cleaning, trimming protruding taps and mitigating and significant infiltration.

E. Verify active customer service connections prior to rehabilitation. Compare service connections from CCTV video with above ground measurements at approximate location of center of each

house or building. Any discrepancies between CCTV data and above ground measurements of laterals shall be brought to attention of the Engineer for a determination of lateral reinstatements. If Contractor discovers an error or addition to the list provided, Contractor shall immediately notify the Engineer for additional investigation. Upon completion of rehabilitation work, a list of all service laterals re-established as part of the work shall be submitted to the Engineer. Compiled list can be in the form of post-inspection installation inspection logs and shall include the following information:

1. Location of each service lateral based on CCTV inspection logs. Location shall include both accurate distance measured from centerline of starting manhole as well as a notation (by clock-reference) of where on circumference of pipe, the service lateral connects.
2. Status (Active or Inactive).
3. Address of each customer and associated active lateral location.

F. During pre-rehabilitation CCTV inspection and prior to installation of CIPP lining, all service lateral connections protruding into main line by 1/8-inch or more shall be internally cut or ground down flush with pipe wall as specified in Section 330130.43.

G. Any infiltration runners or gushers as defined by NASSCO PACP that are observed during the pre-rehabilitation CCTV shall be stopped by injecting a chemical hydrophilic grouting or CIPP short liner. Man-entry with hand-applied fast-setting epoxy can be performed to stop the infiltration, at the Contractor's discretion.

H. Maximum amount of time any home or business shall be without sanitary sewer service is 8 hours and not between 6:00 PM and 8:00 AM. Any service disruption longer than 8 hours shall be bypassed to a sanitary sewer at no additional cost to the City.

I. Service connection effluent may be plugged only after proper notification to affected residence and may not remain plugged overnight. Installation of liner shall not begin until the Contractor has installed all plugs or a sewage bypass system and all pumping facilities have been installed and tested under full operating conditions including bypass of mainline and side sewer flows. Once lining process has begun, existing sewage flows shall be maintained, until resin/felt tube composite is fully cured, cooled down, fully televised and CIPP ends finished.

J. Wastewater flows from existing sewers shall not be allowed to enter the new or rehabilitated facilities until the new or rehabilitated facilities have been cleaned and tested as required in the Contract Documents.

K. Provide hydrophilic end seals at all manhole penetrations/openings prior to installation of uncured CIPP liner.

L. If in the opinion of CIPP liner manufacturer and/or the Engineer, the rate of infiltration in a sewer segment is high enough to risk washout of resin, the Contractor shall perform measures, as required, to minimize infiltration prior to installation, including pre-liners, grouting, etc. If during pre-rehabilitation CCTV inspection, any infiltration runners or gushers (per NASSCO PACP) are observed, Contractor shall submit, in writing for approval by the Engineer, methods and materials for mitigating any adverse impacts from the infiltration.

M. Pressure gauges used for steam curing shall be pressure/vacuum gauges with a pressure range of 0 to 50 psi and ±0.25% test gauge accuracy.

3.02 INSTALLATION:

A. Provide CIPP liner in full length of sewer as shown on work orders. CIPP liner shall be installed via inversion using hydrostatic head or air pressure in accordance with ASTM F1216 and manufacturer's recommendations. Hydrostatic head and/or steam pressure used during installation process shall be sufficient to conform liner to pipe wall; produce dimples at all

service connections, and flared ends at two termination points (manholes/access structure/end-of-line assembly, etc). Contractor shall closely follow the requirements in the submitted liner field curing reports, including the minimum inversion pressure, ideal head, maximum hot head and maximum cold head for each installation.

B. If CIPP does not conform against original pipe at its termination points (manholes/access structure/end-of-line assembly, etc), at no additional cost to City, the full circumference of CIPP exiting host pipe shall be filled with a resin mixture compatible with CIPP, approved by the CIPP manufacturer and the Engineer. There shall be no leakage of groundwater between existing pipe and CIPP at manhole connection or service lateral connections. Any leakage shall be eliminated by the Contractor at no additional cost to the City. Any infiltration found at manhole and/or service connections shall be eliminated by the Contractor at no additional cost to the City. Any infiltration runners or gushers as defined by NASSCO PACP shall be stopped with chemical hydrophilic grouting or CIPP short liner as specified in Section 330130.77.

C. The full length from manhole to manhole of the installed resin-impregnated flexible felt tube CIPP liner in host pipes with less than 18-inch nominal diameter shall be cured using circulating heated water or steam in accordance with ASTM F1216 and manufacturer's recommendations, extending full length from manhole to manhole(s). CIPP liner in host pipes with 18-inch or greater nominal diameter shall be cured using circulated heated water in accordance with ASTM F1216 and manufacturer's recommendations. Resin shall be cured into a hard, impermeable pipe with minimum specified thickness, providing a structurally sound, uniformly smooth interior and tight-fitting liner within existing pipe. Cool-down procedures shall be in accordance with ASTM F1216 and manufacturer's recommendations. The cool-down shall follow manufacturer's guidelines, be measured digitally to allow inspector to inspect or record, be linear, and be gradual; no super cooled air shall be allowed to be injected.

D. Contractor may install CIPP lining in multiple sewer segments at one time where practical. When installing CIPP lining in multiple sewer segments at one time, the top one-half of CIPP liner in intermediate manhole shall be neatly removed, leaving the invert in place, and void between CIPP liner and existing channel shall be filled with non-shrink grout. Manhole bench shall be reconstructed as required to provide a smooth transition to new CIPP liner.

E. All cutting and sealing of CIPP liner at manhole connections shall provide watertight pipe and manhole seals. All cut edges of cured liner shall be thoroughly sealed with same resin as was used in liner. Catalyst or hardener used shall be compatible with resin/catalyst used in liner previously but shall not require an external heat source to begin exothermic reaction (curing). There shall be no leakage of groundwater into manhole between CIPP liner and existing sewer pipe and between existing sewer pipe and manhole wall.

F. Fit hot water source with monitors to accurately gauge temperature of incoming and outgoing water supply. Place another such gauge between CIPP liner and pipe invert at upstream and downstream ends to continuously monitor temperature and to determine the peak exotherm of the resin during curing process. Temperature in CIPP during curing process shall be as recommended by resin manufacturer. Length of time for allowing curing process to be completed shall be of duration recommended by the manufacturer, during which time the Contractor shall maintain required temperature throughout CIPP. Provide a written temperature data chart/curing log to the Engineer for review to ensure that curing temperatures for resin meet manufacturer's recommendations.

G. Fit steam source with monitors to accurately gauge temperature and pressure of steam supply. Place additional temperature and pressure gauges at incoming and outgoing stations. Place another gauge between CIPP liner and pipe invert at upstream and downstream ends to continuously monitor temperature and to determine the peak exotherm of the resin during curing process. Temperature in CIPP during curing process shall be as recommended by resin

manufacturer. Length of time for allowing curing process to be completed shall be of duration recommended by the resin manufacturer, during which time the Contractor shall maintain required temperature throughout CIPP. Provide a written data chart/curing log to the Engineer for review to ensure that the steam temperature and pressure at the source, incoming station and outgoing station are consistent throughout the installation. Include temperature data to ensure that resin curing temperatures meet manufacturer's recommendations. If significant pressure loss is observed, the Engineer may require additional air testing prior to reinstatement of service lateral connections.

H. Temperature monitoring systems with a sensor array along the full length of the liner are required for liners cured by heated water in all sewers with 18-inch or greater nominal pipe diameters with a heat sink, such as groundwater infiltration or proximity to a stream, river or lake. This system shall be installed at the invert of pipe and be installed per manufacturers recommended procedures. Temperature sensors shall be placed at upstream and downstream ends of reach being lined to monitor pressurized fluid (air or water) temperature during curing process. To monitor temperatures inside tube, wall and to verify proper curing, temperature sensors shall be placed between host pipe and liner in bottom of host pipe (invert) throughout the reach to record the heating and cooling that takes place on the outside of liner during processing. As a minimum, sensors shall be spaced apart at intervals no greater than 10 feet in host pipes with 18-inch or greater nominal pipe diameter. Additionally, sensors shall be strategically placed at points where a significant heat sink is likely to be anticipated. Monitoring of these sensors shall be by a computer that can record temperatures at this interface throughout processing of CIPP utilizing a tamper-proof database. Temperature monitoring systems shall be Zia Systems, Vericure by Pipeline Renewal Technologies or Engineer approved equal.

I. Prior to installing liner in host pipe, proper functioning of the continuous temperature monitoring system shall be confirmed by connecting the sensor array to the computer and verifying that sensors are reporting their ambient temperatures. No more than two sensors in sequence can be found faulty during this test. If three or more sensors in sequence are discovered faulty, a new sensor array shall be provided and installed at no additional cost to the City and the new array shall be tested for its proper functioning.

J. Curing of resin system shall be as per recommendations of CIPP system manufacturer of CIPP product. Temperatures achieved and duration of holding the liner at those temperatures shall be per System Manufacturer’s established procedures. If any sensor or sensors along reach indicates that there is a localized issue with respect to achieving proper curing per written installation procedure, Contractor shall address the issue prior to acceptance of the liner. Sensor array’s database required in above paragraph shall have an output report that identifies each sensor by its station in reach and shows maximum temperature achieved during processing of CIPP and time sustained at or above Manufacturer’s required curing temperature at each sensor. The temperature of the liner shall be recorded until the liner has completed the cool-down process.

K. If cool-down is to be accomplished by introduction of cool water into an inversion standpipe to replace water being drained from a small hole made in downstream end, the hardened liner shall be cooled down to a temperature below 100 degrees F (38 degrees C), or ambient temperature, whichever is lower, before relieving static head in inversion standpipe. Contractor shall take measures to ensure that, in release of static head, a vacuum will not be produced that could damage the newly installed CIPP liner.

L. The City will furnish water for sewer pipe cleaning. A hydrant meter shall be secured by the contractor for purposes of tracking water used.

M. Curing water may be discharged into the sewer immediately downstream of the liner.

3.03 REINSTATEMENT OF SERVICES:

A. After new CIPP has been cured and completely cooled down, if applicable, Contractor shall reconnect existing service laterals as designated by pre-rehabilitation television inspection report generated by the Contractor. This shall be done without excavation but from interior of pipeline by means of a television camera and a remote cutting device that reestablishes service connection to not less than 95 percent or better of original diameter and to a maximum of 100 percent of original diameter; overcut connections are not acceptable. All openings shall be clean and neatly cut and the cut shall be buffed with a wire brush to remove rough edges and provide a smooth finish. Bottom of openings shall be flush with bottom of lateral pipe and shall have smooth edges with no protruding material capable of hindering flow or catching debris.

B. Coupons shall be removed from laterals by any means possible including entering homes to flush the material via access from cleanout.

C. Excess resin that builds up and hardens in and around the lateral connections(s) must be removed and/or ground down prior to acceptance of the re-instatement. Contractor will be required to supply an extended lateral cutter bit to reach resin buildup beyond standard length bits.

D. Inactive service laterals will be abandoned by not reopening the service connection after installation of the cured-in-place pipe liner. If necessary, because of uncertainty of matching each tap in the sewer with each property, the Contractor shall dye test to verify if a service connection is active at the direction of the Engineer.

E. Service laterals that were determined to be inactive during CCTV inspection will be abandoned by not reopening service connection after installation of cured-in-place pipe liner. All lateral connections shall be identified as repaired or abandoned in post rehabilitation CCTV. Contractor to provide image file for all active lateral locations along a given pipe segment. Contractor to provide image file at location of lateral even if lateral connection has been abandoned.

F. Contractor shall not open abandoned/capped service connections except at the Engineer's direction. If an abandoned service connection is opened without the Engineer's approval, Contractor shall perform an internal spot repair to close connection, at no additional cost to the City.

G. Provide a fully operational backup device for reinstating service laterals. If there is any doubt about live vs. dead service based upon above property comparison with pipe connections, then Contractor shall verify with dye testing. If for any reason remote cutting device fails during reinstatement of a service lateral, Contractor shall immediately deploy standby device to complete reinstatement. Backup equipment shall be onsite throughout reinstatement process.

3.04 TESTING AND ACCEPTANCE:

A. Acceptance of CIPP lining will be based on Engineer's evaluation of installation, including a review of the CIPP liner curing data, review of post-rehabilitation CCTV inspection data, and review of certified laboratory test results for installed CIPP liner. All CIPP testing, and repairs to installed CIPP as applicable, shall be completed before final completion, meeting requirements of these specifications and documented in written form.

B. Cost of all manufacturer's testing to qualify products furnished to project site shall be the responsibility of the Contractor.

C. Testing of installed liner shall be performed by an approved, independent testing laboratory certified by the American Association for Laboratory Accreditation (A2LA). Contractor shall submit to the Engineer the name and location of independent testing laboratory, a certified statement from laboratory indicating that they are independent from and not associated with the Contractor in any way, and documentation of A2LA certification.

D. For every 1,000 linear feet of CIPP liner installed for the first 5,000 linear feet, the Contractor shall perform sampling and testing to determine the installed CIPP liner flexural properties and CIPP liner thickness. After the first five test results have been collected and all have passed the minimum standards per the specification, the Engineer may require collecting one sample per each shipment of liner. Frequency of testing may be reduced as approved by the Engineer after sufficient tests are performed to verify CIPP liner design, production and installation procedures. Likewise, frequency of testing may be increased by the Engineer and performed by the Contractor at no additional cost to the City when test results show that installed CIPP liner does not meet specifications. If a test is not passed, the Contractor shall re-evaluate liner thickness design to determine if installed physical properties meet minimum design requirements; if it does not, liner shall be replaced or relined with approval from the Engineer at no additional cost to the City.

E. Sampling and testing of the installed CIPP liner shall conform to the standards of ASTM F1216 and the following requirements:
   1. Remove one restrained sample of installed CIPP liner at least 18 inches in length. Sample shall be captured by installing CIPP liner through a section of PVC pipe (same diameter as existing sewer diameter) within the most downstream manhole of installation and at all intermediate manholes if multiple sewer segments are lined at same time.
   2. CIPP liner thickness shall be measured in accordance with ASTM D5813. Flexural properties shall be determined in accordance with ASTM D790. Label and date all samples and provide to Resident Project Representative same day of installation for shipping to independent testing laboratory. Furnish a copy of all transmittals to independent testing laboratory to the Engineer and submit testing results within 30 days after installation of CIPP liner.
   3. After recalculations performed per subsection 3.04.D, any CIPP lining that does not meet new calculated thickness requirements shall be removed and replaced or otherwise corrected. Options for correcting deficient CIPP liner installations that will be considered by the Engineer may include removal of the deficient CIPP liner and re-lining the sewer, open-cut replacement of sewer pipe from manhole to manhole, re-lining sewer with the deficient CIPP liner in place.

F. Perform a post-rehabilitation CCTV inspection of all sewers rehabilitated using CIPP lining methods in accordance with Section 330130.11. Post-rehabilitation CCTV inspection shall be performed following installation of CIPP liner and reinstatement of all active service laterals. The Contractor's project manager and/or superintendent shall review the post-rehabilitation inspection videos to confirm the quality of the videos and of the installed CIPP prior to submittal to the Engineer. If it is determined that any repairs are needed at any segment, a new CCTV inspection shall be performed of the entire segment(s) after the repairs have been completed.

G. Liner Installation Inspection - A visual inspection of the liner will be considered acceptable if liner shows no significant, wrinkles, lifts, ridges, splits, cracks, delamination, flats, dry spots, pinholes, shrinkage, foreign inclusions, crazing, reverse curvatures, or other type of defects in the CIPP lining. Significant defects shall be defined as those listed in paragraph 1.06 of this section; and/or any defect that may create a maintenance issue in future such as inhibiting CCTV cameras or allowing solids to get caught on defect, and/or any defect that appears to reduce long-term structural strength or stability of pipeline. Longitudinal wrinkles/fins in height up to a maximum of five percent of inside diameter of host pipe or 1 inch, whichever is smaller, may be acceptable and shall be evaluated by the Engineer for acceptance on a case by case basis. Defective lining shall be repaired or replaced at no additional cost to the City. If the pipe

is damaged during removal process, the Contractor shall provide a point repair at no additional cost to the City.

H. Post CCTV Video Inspection and Submittals: Contractor shall submit all digital CCTV of lined sewer within thirty calendar days for each pipe segment. Engineer shall review and approve payment based upon satisfactory completion of a liner that is free of significant defects as defined in paragraph 1.06 of this section.
   1. Removal of wrinkles or fins deemed significant at the discretion of the Engineer, shall be removed using a milling head, relined or replaced by the Contractor as directed by the Engineer at no additional cost to the City. There shall be no evidence of other major defects in the CIPP lining.
   2. CIPP liner longitudinal shrinkage of more than three inches from the face of the manhole shall be repaired with a fiberglass reinforced CIPP spot repair per section 3.05 of this specification at no additional cost to the City.
   3. Measure CIPP liner circular shrinkage via man entry to try to insert a $1/16^{th}$ inch thick ruler or similar into any gap more than 8 inches past the MH wall. The Contractor shall document these measurements with digital photos and submit documentation to the Engineer for approval. Circular shrinkage shall be repaired per manufacturer recommendations at no additional cost to the City.

I. The CIPP liner shall be watertight. Groundwater infiltration through the wall of the liner shall be zero.

J. All service connections shall be opened to a minimum of 95 percent and a maximum of 100 percent of opening so that a new lateral or lateral lining can be installed properly. Any overcuts more than 105 percent shall be repaired with hydrophilic seal hat connection, CIPP liner or other approved method by the Engineer.

K. All coupons and excess resin shall be removed from reinstated service laterals prior to acceptance of CIPP lining.

L. All pipe-to-manhole connections shall be watertight and free of infiltration.

M. After all installations are complete, inspected, post-rehabilitation CCTV has been reviewed and approved by the Engineer, and all work is satisfactory to the Engineer, Contractor shall cut and trim the new liner at each manhole wall.

3.05 CIPPSL:

A. Contractor shall install a sectional CIPP short liner in areas where longitudinal shrinkage of the installed CIPP liner near the manholes is three inches or more, at no additional cost to the City per specification 330130.77.

END OF SECTION 330130.72

This page was intentionally left blank.

SECTION 330130.74 – SERVICE LATERAL CONNECTION LINER:

PART 1 - GENERAL

1.01 SCOPE OF WORK:

A. It is the intent of this specification to provide for the rehabilitation of Service Lateral Connections (SLC) to rehabilitated (CIPP lined) and non-lined sewer lines, without excavation, by installation of a resin-impregnated, flexible liner in the form of an internal sleeve, consisting of a full-wrap in the main and extending a minimum length required to seal the first joint, with a minimum of 18 inches into the lateral, unless approved otherwise. Furnish all labor, materials, equipment and incidentals required to install the service lateral connection liner and appurtenances complete and verified through CCTV inspection.

B. Most SLC work will be performed on mainline sewers that have recently been lined with a CIPP product. Service laterals have been reinstated and protruding taps have been removed to within 1/8 inch of the mainline sewer wall.

C. Service lateral connections may be a combination of tees, wyes or break-in taps of varying sizes (3 inches-6 inches). The length of the SLC liner in each lateral will be dependent upon the configuration of the individual lateral. If the configuration of the lateral does not limit the length of the liner, the liner shall extend a minimum of 18 inches into the lateral, unless approved otherwise. The minimum length of the liner for each lateral will be determined from observation of the SLC during CCTV inspection, and in all cases shall extend beyond the first joint in the service lateral.

D. In some instances, two (or more) services that require lateral lining could be next to or across from each other. In this case, only one of the lateral liners can be a full-wrap style. The other lateral liner(s) must be a brim style.

E. There will be no access to the service pipe from an upstream cleanout on or off private property. All work must take-place from the mainline sewer.

1.02 RELATED WORK:

A. Television Inspection is included in Section 330130.11.

1.03 SUBMITTALS:

A. Submit the following information:

1. Shop drawings and schedules of all SLC liner and appurtenances required. Furnish design data and specification data sheets listing all parameters used in the liner design and thickness calculations.
2. Thickness Calculations. Liner thickness calculations shall be performed by a professional engineer and submitted to the Engineer with supporting assumptions. Calculations shall be done after cleaning, televising, and other field inspections have been accomplished. Perform separate calculations for each the following depth ranges: one range from 0-10 feet and separate ranges for each depth greater than 10 feet in one-foot increments. Identify the manufacturer's recommended design parameters used in calculations. The finished liner shall have a minimum thickness of 2 mm for 4-inch laterals and 3 mm for 6-inch laterals.
3. Detailed procedure for installing the SLC liner.
4. The name of the SLC liner manufacturer and the location of the facility where the SLC liner was manufactured.
5. Statement of Qualifications. Submit a copy of manufacturer's license certificate. The Contractor for installing a mainline/lateral connection and lateral repair system shall use a Manufactured System that has a minimum of a five-year history of satisfactory performance. A licensed and certified trainer and representative from the liner system manufacturer shall be on-site to assist in the work for a minimum of 2 weeks. This trainer shall submit list of ten (10) similar jobs within the past three (3) years that utilizes this

manufacturer's product as well. Provide project information such as name of project, number of services connection laterals, date complete, and project references. The Statement of Qualifications shall include the following information:

a. The number of years of experience in performing SLC lining projects.
b. The name of the SLC lining manufacturer and supplier for this work and previous work listed below. The Contractor shall be an approved installer as certified and/or licensed by the liner manufacturer.
c. A list of municipal clients that the Contractor has performed this type of work for without defects or performance problems.
    1) The list shall contain names and telephone numbers of persons to be called to verify previous performance.
    2) A full description of the actual work performed.
    3) The list of municipal clients and description of projects shall include the number of SLCs lined over the past 3 years.

6. Material Certifications. Written certification is required from the manufacturer that all materials used in the work were manufactured and tested in accordance with the appropriate ASTM standard, and are being used or installed in conformance with the manufacturer's recommendations.
7. Resident Notifications. The Contractor shall submit a copy of the initial resident notification as described in Paragraph 1.08.
8. Storage and Delivery Procedures. The Contractor shall provide the liner manufacturer's recommended storage and delivery procedures. This shall include storage and delivery conditions, maximum time from wet-out to installation, and other pertinent information.
9. Material Safety Data Sheets. The Contractor shall submit Safety Data Sheets (SDS) for each component of the SLC liner system.
10. Pipe Cleaning Narrative. The Contractor shall submit a narrative describing in sufficient detail the proposed methods of root cutting and cleaning the existing laterals. Prepare such narrative to include the degree of cleaning as recommended by the lining manufacturer. Such narrative shall indicate approval of proposed cleaning methods by the lining manufacturer's technical representative.
11. Curing Cycle. The Contractor shall submit the resin manufacturer's recommended curing cycle as well as the recommended cooling rate. The Contractor shall submit a copy of the cure logs for each lateral installation.
12. Post-lining CCTV Inspection Provide digital recordings, photographs and Post-Lateral CCTV Inspection logs for the mainline sewer after installation of Service Lateral Connections as specified in Section 330130.11 Television Inspection.

1.04 REFERENCE STANDARDS:

A. American Society for Testing and Materials (ASTM)
    1. ASTM D790 - Standard Test Methods for Flexural Properties of Unreinforced and Reinforced Plastics and Electrical Insulating Materials.
    2. ASTM F1216 - Standard Practice for Rehabilitation of Existing Pipelines and Conduits by the Inversion and Curing of a Resin-Impregnated Tube
    3. ASTM D 5813 - Standard Specification for Cured-in-Place Thermosetting Resin Sewer Piping Systems.
B. Where reference is made to one of the above standards, the revision in effect at the time of the bid opening shall apply.

1.05 QUALITY ASSURANCE:

A. The purpose of the SLC liner is to provide for a permanent watertight seal of the annular space

of a lined sewer pipe after service lateral reinstatement, to lock the liner in place with the service connection, to provide a seal of the first joint or joints in the service lateral, and to provide for the repair of a tapped service in a lined sewer pipe.

B. The Contractor shall be capable of providing crews as needed to complete the work without undue delay and within the contract time allotted.

C. SLC liners shall be provided by a single manufacturer. The supplier shall be responsible for the provision of all test requirements specified herein as applicable. In addition, all SLC liners to be installed under this Contract may be inspected at the plant for compliance with this Section by an independent testing laboratory provided by the City, at their own expense. The Contractor shall require the manufacturer's cooperation in these inspections.

D. Inspection of the SLC liner may also be made by the Engineer after delivery. The SLC liner shall be subject to rejection at any time on account of failure to meet any of the requirements specified, even though sample liner may have been accepted as satisfactory at the place of manufacture. Liner rejected after delivery shall be marked for identification and shall be removed from the job site at once.

1.06 SYSTEM DESCRIPTION:

A. The SLC liner shall be a one-piece or two-piece, tight fitting, corrosion resistant and verifiable non-leaking, cured-in place pipe with a sealing component between the SLC lining product and the host lateral and mainline pipe walls as recommended by the manufacturer. The mainline portion of the lateral lining system that connects to the main/lateral interface shall be a full-wrap in 8-inch and larger diameter sewers and shall be a brim style in 6-inch diameter sewers. In all cases, the junction between the mainline portion and the lateral sleeve must be watertight. The wall thickness shall be uniform. The carrier packer shall be specifically designed for 3-inch to 6-inch diameter service connections. It shall be manufactured to conform to either a wye, tee, break-in type connection and other non-standard connections found commonly in the system. A corrosion resistant resin compatible with the installation process shall be used.

1.07 DELIVERY, STORAGE AND HANDLING:

A. Care shall be taken in shipping, handling and storage to avoid damaging the SLC liner, especially during adverse weather conditions. Any liner damaged in shipment shall be replaced at no cost to the City.

B. Any liner showing a split or tear, or which has received a blow that may have caused damage, even though damage may not be visible, shall be marked as rejected and removed at once from the job site.

B. The liner shall be maintained at a proper temperature in refrigerated facilities to prevent premature curing at all times prior to installation. The liner shall be protected from UV light prior to installation. Any liner showing evidence of premature curing will be rejected for use and will be removed from the site immediately.

1.08 PUBLIC NOTIFICATION:

A. Notify all property owners who discharge sewage directly into the sewer to be lined that their sewage service will be discontinued while the liner is being installed. Deliver written notices to each affected resident one week prior to, and again 48 hours in advance of commencement of the work being conducted in their section, giving the date, start time and time when service will be completely restored. Contractor shall notify residents immediately prior to installation of SLC. Also provide a telephone number for Contractor which residents can call for information during

the work. Contact any home or business that cannot be reconnected within time stated in written notice.

B. Maximum amount of time any home or business shall be without sanitary sewer service is 2 hours for installation of the SLC liner between 9:00 am and 3:00 pm.

1.09 GUARANTEE

A. All lining work shall be fully guaranteed by the Contractor and manufacturer for a period of two years from the date of final completion. A written warranty shall be submitted. During this period, all serious defects discovered by the City shall be removed and replaced in a satisfactory manner at no additional cost to the City. The City may conduct an independent television inspection, at its own expense, of the lining work prior to the completion of the guarantee period. Any defects replaced at that time shall be fully guaranteed by the Contractor and manufacturer for a period of two years from the date the defect was repaired. Wrinkles, blisters, dry spots in resin or other defects in the finished SLC liner, which in the opinion of the Engineer, negatively affect the integrity or strength of the SLC or the flow capacity of the pipe, are unacceptable. Contractor shall remove and repair all such defects in a manner that is satisfactory to the Engineer, at no additional cost to the City. Defects include but are not limited to:
   1. Leakage through the liner or between liner and pipe
   2. Reduction of the liner thickness of more than 10 percent
   3. Separation of the liner from the pipe
   4. Excessive wrinkles inhibiting flow

   The liner shall be as free as commercially practical from visual defects such as foreign inclusions, dry spots, pinholes, and delamination. The liner surface shall have a smooth finish and must be free of leaks, cracks, and crazing. Some minor aberrations that, in the Engineer's opinion, will not appreciably decrease the flow cross section or affect the flow characteristics shall be permissible.

PART 2 – PRODUCTS

2.01 MATERIALS:

A. The SLC liner shall be a resin-impregnated flexible polyester felt, non-woven textile tube, needle punched felt, circular knit or circular braided, E-glass corrosion-resistant flexible fiberglass laminate liner or equivalent material tube which is cured-in-place by an acceptable curing method. The resin shall be suitable for the design conditions as well as the curing process. The SLC liner system shall provide a service life of 50 years. The portion of the liner system that extends into the lateral itself shall have the minimum structural properties listed below.

Mechanical Property	Minimum Standard Polyester Resin	Vinylester/Epoxy
Flexural Strength (ASTM D790)	4,500 psi	5,000 psi
Flexural Modulus of Elasticity (ASTM D790)	250,000 psi	400,000 psi

B. The portion of the liner system that extends into the lateral itself shall be designed, fabricated, and installed for the actual conditions encountered for this application including the material of the host pipe, in accordance with the applicable provisions of ASTM F1216, and shall meet the following minimum design conditions:
   1. AASHTO H-20 live load with two trucks passing.
   2. Soil Weight 120 pounds per cubic foot. Coefficient of friction Ku′=0.130.
   3. Estimated maximum groundwater level at ground surface.

4. Fully deteriorated pipe with 2 percent (min.) ovality. If ovality of existing pipe is found to be worse, use actual percent up to 5 percent (max.).
5. Soil Modulus 1,000 psi.
6. Factor of Safety = 2
7. Soil Depth: Depth of Cover will be determined by field measurements.

C. The SLC liner system shall be designed to withstand all imposed loads, including live loads and hydrostatic pressure. The SLC liner shall have sufficient wall thickness to withstand all anticipated external pressures and loads that may be imposed after installation.

D. The cured SLC liner product shall form a continuous, tight-fitting, hard, impermeable liner which is chemically resistant to domestic sewage over the expected life of the rehabilitated pipe. The liner material and resin shall be completely compatible.

E. The insert must use a hydrophilic waterstop component or an adhesive sealant to form a sealing watertight bond between the SLC lining product and the host lateral and mainline pipe walls.

2.02 RESIN:

A. The resin system shall meet the requirements of ASTM F1216, and ASTM D5813. The resin installed SLC liner system shall produce an SLC liner that will comply with the structural requirements specified herein and shall provide chemical resistance as indicated in ASTM F1216. The resin shall be compatible with the rehabilitation process, shall be able to cure in the presence or absence of water, and shall have an initiation temperature for cure as recommended by the resin manufacturer. Unless otherwise specified, provide a general purpose or enhanced strength unsaturated, thermosetting, polyester, vinyl ester, epoxy or silicate resin and a catalyst system compatible with the installation process.

B. Submit documentation from the resin manufacturer specifically describing the chemical characteristics of the resin system, including allowable mixing, impregnation, and handling time, transportation and storage time, and recommended curing cycle including temperatures, pressures, and times. The resin manufacturer's documentation must also include maximum allowable time for handling the impregnated tube prior to insertion and the maximum allowable elapsed time from insertion to exotherm. If remedial measures are available to extend either of the maximum allowable times indicated above, without affecting the physical properties of the resin, the resin manufacturer should describe these measures and the time limits beyond which even these measures will not prevent alteration of the physical properties of the resin.

2.03 FULL WRAP LINERS:

A. The mainline portion of the lateral lining system that connects to the main/lateral interface shall be a full circumferential sleeve. The mainline portion of the carrier packer shall accommodate pipe diameters ranging from 8 inches through 24 inches. The insert shall be continuous over the length of the rehabilitated portion of the service lateral. The insert must extend a minimum of 16 inches of the mainline pipe, i.e., end to end measurement of the full wrap (5 inches on either side of a 6-inch lateral connection or 6 inches on either side of a 4-inch lateral connection).

B. The SLC liner shall be manufactured and installed by: T-Liner Shorty by LMK, Cosmic Service Lateral Liner by Cosmic Engineering GmbH, or Engineer approved equal.

2.03 BRIM STYLE LINERS:

A. Brim style liners are allowed only under the conditions mentioned in Paragraph 1.06A of this specification.

B. The mainline portion of the lateral lining system that connects to the main/lateral interface shall be a brim extending at least 3 inches from the perimeter of the lateral connection. The mainline portion of the carrier packer shall accommodate 6-inch nominal pipe diameters.

C. The SLC liner shall be manufactured and installed by: T-Liner Shorty by LMK, Cosmic Service Lateral Liner by Cosmic Engineering GmbH, or Engineer approved equal.

PART 3 – EXECUTION

3.01 PRE-INSPECTION:

A. Perform television inspection on the mainline pipe as specified in Section 330130.11 to confirm that the proposed repair falls within the limitation parameters set by the manufacturer on the following aspects:
   a. Location and clock reference of the lateral junctions to be lined
   b. Offsets, any intrusion from the lateral into the main
   c. Angle at which the connection comes in
   d. Changes in angle of approach of the lateral for the length of the repair
   e. Potential flows coming throughout the lateral pipe
   f. Potential flows going through the main pipe
   g. Diametric size of the connection for the length of the liner
   h. Size of the main pipe at the point of the SLC
   i. Presence of active infiltration within the vicinity of the work area

3.02 LINE PREPARATION:

A. Prior to installing the SLC liner product, the area around the internal lateral sealing surface in both the main and lateral shall be inspected. Waste product build-up, hard scale, roots, lateral cutting debris or resin slugs must be removed using high pressure water jetting or in-line cutters. All laterals to be lined shall be cleaned as required prior to lining. The term “cleaned” shall mean the removal of all sand, dirt, roots, grease, all other solids, semisolids, and materials that could interfere with the bonding of the SLC liner to the interior face of the sewer lines.
B. Built-up deposits on the main and lateral pipe walls shall be removed. The removal shall reach at least one foot beyond the SLC liner product to allow the bladder to inflate tightly against the pipe walls ensuring a smooth transition from SLC liner product to the existing pipe wall.
C. Prior to installing a brim-style liner, remove the polyurethane coating on the mainline liner within the limits of the brim to provide an acceptable surface for bonding.
D. Provide Pre-Installation CCTV and Post-Mainline CCTV digital recordings, photographs and inspection logs as specified in Section 330130.11 Television Inspection. Immediately prior to liner insertion, the CCTV camera shall traverse the lateral to inspect for debris which may have entered the line after the previous CCTV inspection.
E. Where active infiltration is present and when it is recommended by the SLC liner manufacturer, the infiltration shall be stopped in advance by grouting.
F. The Contractor is responsible for bypassing of sewage as necessary during the installation of the SLC liner product.

3.03 INSTALLATION:

A. The SLC liner shall be impregnated with resin (wet-out) under controlled conditions. The volume of resin used shall be sufficient to fill all voids in the textile lining material at nominal thickness and diameter. The volume shall be adjusted by adding 5% to 10% excess resin for the change in resin volume due to polymerization and to allow for any migration of resin into the cracks and joints in the original pipe. No dry or unsaturated area in the mainline sheet or lateral tube shall be acceptable upon visual inspection.

B. The SLC liner product shall be loaded on the applicator apparatus, attached to a robotic manipulator device and positioned in the mainline pipe at the service connection that is to be rehabilitated. The robotic device, together with CCTV inspection, shall be used to correctly position the SLC liner in the lateral opening prior to curing. Pressure shall be adjusted to fully deploy the SLC liner product into the lateral connection and hold the SLC product tight to the main and lateral pipe walls.
C. The pressure apparatus shall include a bladder of sufficient length in both the main and lateral lines such that the inflated bladder extends beyond the ends of both the lateral tube and main line tube or brim of the SLC liner product, pressing the end edges flat against the internal pipe wall, thus forming a smooth transition from SLC liner product to pipe diameters without a step, ridge or gap between the SLC product and the inner diameters of the lateral and mainline pipes.
D. For systems with hydrophilic gaskets or strips, the mainline liner and bladder shall be wrapped around the "T" launching device and held firmly by placing 2 gaskets or strips around the main liner with an additional gasket or strip positioned at the terminal end of the liner that extends into the lateral. For systems utilizing a hydrophilic paste or adhesive sealant, the material shall be applied to the main/lateral interface as a 2-inch-wide band on either side of the lateral in the mainline liner as well as at the terminal end of the liner that extends into the lateral. The main bladder shall be inflated causing the main sheet to unwrap and expand, embedding the sealant material between the main liner or brim and the main pipe.
E. The SLC liner product shall be inverted from the mainline into the lateral connection in a continuous tight fitting, watertight pipe-within-a-pipe to eliminate any visible ground water leakage and future root growth at the lateral to mainline connection.
F. After inversion is completed, recommended pressure must be maintained on the impregnated SLC liner product, pressing the liner firmly against the inner pipe wall for the duration of the curing process. The liner is chemically cured at ambient temperatures, by a suitable heat source such as steam or hot water, or by UV light.
G. The finished SLC liner product shall be free of dry spots, lifts and delamination. The installed SLC product should not inhibit the post installation video inspection, using a closed-circuit television camera, of the mainline and service lateral pipes or future pipe cleaning operations. For SLC liners with a mechanical seal, the CIPP shall taper at each end providing a smooth transition for accommodating video equipment and maintaining proper flow in the mainline. In all cases, the finished product must provide an airtight/watertight verifiable non-leaking connection between the main sewer and sewer service lateral. During the warranty period, any defects with the SLC that affect the performance or cleaning of the lateral connection shall be repaired at the Contractor’s expense in a manner acceptable to the City.
H. The Contractor shall inform the Engineer of service laterals in which a SLC liner product cannot be installed as specified herein. These service laterals will be identified, documented, photographed by the Contractor, and the Engineer will be informed via RFI of the conditions encountered. The Contractor will not attempt to install a SLC liner product in these services unless directed by the Engineer.

3.04 FIELD TESTING AND ACCEPTANCE:

A. Following installation of SLC liners in each segment, provide digital recordings, photographs and CCTV Inspection logs for the mainline sewer as specified in Section 330130.11 Television Inspection.
B. Final acceptance of the SLC liner will be based on the Engineer’s review of the installation and the CCTV inspection. The SLC liner in place will be evaluated for the following features.
   1. Groundwater infiltration of the liner shall be zero.

SECTION 330130.74 – SERVICE LATERAL CONNECTION LINER: continued

2. Service connection shall be open, clear and watertight.
3. There shall be no evidence of splits, cracks, breaks, lifts, kinks, delamination or crazing in the liner.

C. If any defective liner is discovered after it has been installed, it shall be removed and replaced with either a sound liner or a new pipe approved by the Engineer at no additional cost to the City.

D. The City may elect to perform additional testing of SLC liners in place with an independent entity at its own cost.

END OF SECTION 330130.74

This page was intentionally left blank.

SECTION 330130.77 – CURED-IN-PLACE PIPE SHORT LINERS:

PART 1 – GENERAL

1.01 SCOPE OF WORK:

A. Furnish all materials, labor and equipment and perform all incidental work necessary to install and test cured-in-place pipe short liners (CIPPSL), including cleaning; removal and disposal of debris; television inspection; performing sample testing; removing protruding taps by remote methods; stopping active leaks that might interfere with the integrity of the liner to be installed; providing water; complete and accepted.

B. Removal and replacement of fences, repair to yards, lawns, sidewalks, driveways, and other public or private property, due to actions or processes related to the work being performed shall be included in the cost of the Work.

C. The Contractor shall not change any material, design values or procedural matters stated or approved herein, without informing the Engineer and receiving written approval of the change. Unapproved changes shall result in rejection and removal of work done with the unapproved materials or processes at no additional cost to the City.

D. Maintenance and Protection of Traffic, confined space entry and work site protection are the responsibility of the Contractor and costs of these items are included in the cost of the Work.

1.02 RELATED WORK:

A. Television Inspection is included in Section 330130.11.

B. Cured-in-Place Pipe Lining is included in Section 330130.72.

1.03 SUBMITTALS:

A. Submit the name of CIPPSL supplier and a list of materials to be furnished.

B. Submit copies of certified test reports to confirm that CIPPSL materials have been manufactured and tested in accordance with the ASTM Standards specified herein.

1. Submit test reports for the materials to be used for this work. Test results shall be the manufacturer's standards for acceptance of field fabricated and installed CIPPSL.
2. Prior to the installation of any CIPPSL, make test specimens from the materials to be utilized for this work. Make sufficient number of specimens for conducting the referenced testing. Specimens shall be cut from the resin-impregnated patch prior to insertion into the pipe.

C. Submit a pre-installation and post-installation CCTV of CIPPSL on liners not scheduled for additional rehabilitation.

1.04 REFERENCE STANDARDS:

A. American Society for Testing and Materials (ASTM)

1. ASTM D543 - Standard Practices for Evaluating the Resistance of Plastics to Chemical Reagents.
2. ASTM D638 - Standard Test Method for Tensile Properties of Plastics.
3. ASTM D790 - Standard Test Methods for Flexural Properties of Unreinforced and Reinforced Plastics and Electrical Insulating Materials.
4. ASTM D2412 - Standard Test Method for Determination of External Loading Characteristics of Plastic Pipe by Parallel-Plate Loading.
5. ASTM D2990 - Standard Test Methods for Tensile, Compressive, and Flexural Creep and Creep-Rupture of Plastics.
6. ASTM F1216 - Standard Practice for Rehabilitation of Existing Pipelines and Conduits by the Inversion and Curing of a Resin-Impregnated Tube

SECTION 330130.77 – CURED-IN-PLACE PIPE SHORT LINERS: continued

7. ASTM F2599 – Standard Practice for The Sectional Repair of Damaged Pipe By Means of An Inverted Cured-In-Place Liner

B. Where referenced is made to one of the above standards, the revision in effect at the time of bid opening shall apply.

1.05 QUALITY ASSURANCE:

A. The Contractor shall be fully qualified, experienced and equipped to complete the work in a timely and satisfactory manner. Submit the following information to the Engineer for review and approval before CIPPSL work is performed.
   1. Name of the CIPPSL manufacturer and supplier for this work and previous work performed. The Contractor shall be certified by the manufacturer to install the CIPPSL.

B. All CIPPSL's, regardless of pipe size or length, shall be furnished, fabricated and installed by a single manufacturer.

1.06 GUARANTEE:

A. All CIPPSL's shall be guaranteed by the Contractor for a period of 2 years from the date of final completion. During this period, all defects in the CIPPSL's shall be repaired in a manner satisfactory to the Engineer or the affected pipe shall be removed and replaced with new pipe at no additional cost to the City.

PART 2 – PRODUCTS

2.01 HEAT-CURED: FIBERGLASS/POLYESTER FELT REPAIR MATERIAL:

A. The CIPPSL shall be a resin impregnated fiberglass/polyester felt sleeve which is wrapped around an inflatable packer and positioned in the sewer to be rehabilitated and cured in place by circulating hot water to cure the resin.

B. The CIPPSL sleeve shall be fabricated from a minimum of two layers of fiberglass with a single layer of polyester felt sandwiched between the fiberglass layers. The material shall be sewn together with multiple polyester threads using zigzag stitching spaced evenly over the full width of the material. The three-layer composite reinforcement material shall have a minimum mass of 40.6 oz/sq yd with a thickness not less than 0.24-in. Fiberglass alone is not acceptable.

C. The fiberglass shall be woven roving having a minimum weight of 24 oz/sq yd and shall be made of "E" glass coated with a sizing compatible with the resin being used.

D. The polyester felt shall be needle punched and have a minimum weight of 16.5 oz/sq yd.

E. The resin shall be a two-part epoxy type liquid thermosetting resin suitable for the intended use as well as the proposed curing method. The diluted epoxy resin shall contain at least 60 percent of bisphenol A, 10 to 20 percent of bisphenol F with the remainder of the mixture being a diluent. Epoxy resin shall be D.E.R. (R) 353 by the Dow Chemical Company; ME 948 by Micon or Engineer approved equal.

F. The epoxy resin shall be delivered in the resin manufacturer's original containers. Each container shall be clearly labeled as to contents and product data. The resin shall be stored, mixed and applied in accordance with the manufacturer's recommendations.

G. The CIPPSL shall provide a service life of 50 years and shall have, as a minimum, the initial and long-term properties listed below.

SECTION 330130.77 – CURED-IN-PLACE PIPE SHORT LINERS: continued

MECHANICAL PROPERTY	INITIAL	LONG-TERM
Flexural Strength	8,000 psi	-------
Flexural Modulus of Elasticity	280,000 psi	140,000 psi
Tensile Strength	5,000 psi	------
Tensile Modulus of Elasticity	280,000 psi	140,000 psi

H. CIPPSL shall form a continuous, tight-fitting, hard, impermeable liner which is resistant to chemicals identified in ASTM F1216. The CIPPSL shall have a suitable membrane coating for protection of the interior surface and to provide a uniform, smooth flow surface. No membranes or plastic coating shall be allowed between the repair patch and the pipe wall.
I. The fiberglass/polyester felt sleeve shall be fabricated to a size that will tightly fit the sewer being rehabilitated after being installed and cured. The transition from the patch to the existing pipe must be smoothly tapered.
J. The CIPPSL shall be by Avanti International of Webster, TX, AP/M Permaform of Johnston, IA, or Engineer approved equal.
K. Thickness of the cured liner shall be as recommended by the manufacturer but shall not exceed 1/4-in when cured unless authorized in writing by the Engineer.
L. CIPPSL shall have a minimum length of 3-ft and shall not exceed 30-ft in length. CIPPSL lengths shall extend a minimum of 1-ft beyond the pipe defects at each end of the repaired section. Length of each required repair shall be verified in the field prior to installation.
M. CIPPSL shall not begin or end within one foot of a pipe joint or point repair joint.
N. All CIPPSL shall be one piece. Separately fabricated or installed CIPPSL's utilizing overlapped or "butted" ends shall not be acceptable.

2.02 AMBIENT-CURED MATERIAL:

A. The CIPPSL tube will consist of one or more layers of flexible non-woven needled felt or a reinforced non-woven material. The tube will be continuous in wall thickness based upon design calculations found in ASTM F1216.
B. The CIPPSL tube shall be compressible material at each end forming a smooth transition to the host pipe.
C. The liner will be capable of confirming to offset joints, bells, and disfigured pipe sections.
D. The resin will be polyester or, or vinyl-ester with proper catalysts as designated for the specific application.
E. The CIPPSL shall be by LMK Technologies of Ottawa, IL or Engineer approved equal.
F. Thickness of the cured liner shall be as recommended by the manufacturer but shall not exceed 1/4-in when cured unless authorized in writing by the Engineer.
G. CIPPSL shall have a minimum length of 3-ft and shall not exceed 30-ft in length. CIPPSL lengths shall extend a minimum of 1-ft beyond the pipe defects at each end of the repaired section. Length of each required repair shall be verified in the field prior to installation.
H. CIPPSL shall not begin or end within one foot of a pipe joint or point repair joint.
I. All cured-in-place spot repairs shall be one piece. Separately fabricated or installed CIPPSL's utilizing overlapped or "butted" ends shall not be acceptable.

MECHANICAL PROPERTY	INITIAL	LONG-TERM
Flexural Strength	4,500 psi	-------
Flexural Modulus of Elasticity	250,000 psi	-------

PART 3 - EXECUTION

3.01 LINE OBSTRUCTIONS:

A. It shall be the responsibility of the Contractor to clear the line of all obstructions such as solids,

joint sealing material, dropped joints in the sewer pipe and laterals, protruding service connections or collapsed pipe that will prevent the insertion of the short liner. Critical and/or hazardous utility crossings that occur through a sewer pipe (gas, electric, fiber optic etc.) shall be coordinated with the utility owner, prior to any work. If CCTV inspection reveals an obstruction that cannot be removed by conventional sewer cleaning equipment, or an internal cutter to remove such things like protruding services which are to be included in this pay item, then the Contractor shall inform the Engineer that a point repair excavation is required to uncover and remove or repair the obstruction. No excavation work shall be performed without the prior approval of the Engineer.

3.02 HEAT CURED INSTALLATION:

A. Clean each length of pipe to be lined and dispose of any resulting material as specified in Section 330130.41.
B. All obstructions in the sewer which may impede the insertion of the liner shall be removed by the Contractor.
C. Conduct a television inspection of each length of pipe after it is cleaned as specified in Section 330130.11. Document the location of all active service connections and verify the lengths of repairs as directed by the Engineer. A digital copy of these recordings shall be submitted to the Engineer via Email, Dropbox, or USB.
D. Furnish bypass pumping of sewage flows where the rehabilitation work is being performed.
E. The CIPPSL material shall be measured, cut and impregnated with epoxy resin in the field to the measurements determined from the videotape inspections. The installation and curing of the CIPPSL's shall be in complete accordance with the manufacturers' specifications and a representative of the manufacturer shall be present during the first day of installation.
F. The installed CIPPSL shall be cured by circulating hot water through the resin impregnated patch.
G. The inflatable element and hydrostatic pressure used during the installation process shall be sufficient to tightly hold the CIPPSL to the existing pipe wall, producing dimples at all service connections and squeezing surplus resin into any cracks in the pipe. This pressure shall be great enough to overcome or prevent infiltration from entering the existing pipeline during the curing process.
H. The Contractor shall ensure that the shroud covering the packer is completely removed from the repaired pipe.
I. Where CIPPSL's connect to existing manholes, the repair shall create a watertight seal at the pipe connection and into the trough. All cut edges of the cured liner shall be thoroughly sealed with the same resin as was used in the CIPPSL materials.
J. Reopen all of the existing active service connections on each length of sewer following patching. The active service connections shall be reopened from inside the sewer by means of a cutting device controlled by a closed-circuit television camera. All cut out material shall be removed from the sewer.
K. Each active service connection shall be cut completely open and shall have smooth edges with no protruding material capable of hindering flow or catching and holding solids contained in the flow stream.

3.03 AMBIENT CURED INSTALLATION:

A. The installation procedure shall conform to ASTM F2599
B. When required, the flow shall be bypassed.

C. Installer shall clean and inspect the line using a pan/tilt camera capable of verifying active or inactive service connections and the overall structural condition of the pipeline. All roots, debris, and protruding service connections will be removed prior to reconstruction of the pipe segment.

D. The liner tube shall have a breakaway connection to the inflation bladder at the leading end. A sufficient amount of approved catalyzed resin shall be introduced into the tube under a controlled vacuum. All resin shall be contained within the tube to ensure no public property or persons are exposed to the liquid resin. A resin-impregnated sample (wick), shall be retained by the installer.

E. The saturated tube along with the inflation bladder will be inserted into a flexible launcher device. The launching device shall be pulled into the pipe using a cable winch. The pull is complete when the end of the launching device is aligned with the beginning of the damaged pipe section. The resin and tube are to be completely protected during the pull. No resin shall be lost by contact with manhole walls or the pipe during the pull. The resin that provides a structural seal shall not contact the pipe until positioned at the point of repair. The resin should not be contaminated or diluted by exposure to dirt, debris, or water during the pull.

F. The installer shall be capable of viewing the entire liner contacting the host pipe from the beginning to the end of the liner verifying the liner has covered the entire damaged section. Video documentation of the entire liner contacting the host pipe, prior to curing shall be provided to the Engineer.

G. When the curing process is complete, the pressure shall be released. The inflation bladder and launching device shall be removed from the host pipe with the winch. Ensure that no barriers, coatings, or any material other than the cured tube/resin composite, specifically designed for desirable physical and chemical resistance properties, have been left in the host pipe. Any materials used in the installation other than the cured tube/resin composite must be removed from the pipe by installer.

H. Any service lateral connections covered by the sectional repair are to be opened using a self-propelled robotic cutting device specifically designed for cutting cured-in-place pipe.

3.04 PUBLIC NOTIFICATION:

A. A public notification program shall be implemented, and shall, at a minimum, require the Contractor to be responsible for contacting each home or business connected to the sanitary sewer and informing them of the work to be conducted, and when the sewer will be offline. The Contractor shall also provide the following:

1. Written notice to be delivered to each home or business describing the work, schedule, how it affects them, and a local telephone number of the Contractor that they can call to discuss the project or any problems, which could arise. This notice must be approved for use by the Engineer and shall be coordinated with the General Requirements.
2. All notices shall be prepared and distributed by the Contractor. Notices will be required prior to construction, 48 hours in advance of CIPPSL Work. Notices shall be prepared and handed out to all residents and businesses affected by CIPPSL Work. All notices shall be approved by the Engineer prior to distribution. Example notices will be furnished to the Contractor. Contractor shall copy and distribute notices at no additional cost to the City.
3. Communicate immediately with any home or business that cannot be reconnected within the time stated in the written notice. Notify the Engineer immediately regarding the delay.

SECTION 330130.77 – CURED-IN-PLACE PIPE SHORT LINERS: continued

3.05 CLEAN-UP OPERATIONS:

A. All materials removed from the sewer line and from the pipe lining process shall be satisfactorily disposed of offsite by the Contractor.
B. Prior to final completion, the Contractor shall demonstrate, in the presence of the Engineer, the capability of the liner to perform as specified. Any deficiencies found in the liner shall be corrected at no additional cost to the City.

3.06 FIELD TESTING AND ACCEPTANCE:

A. Field acceptance of all CIPPSL locations shall be based on the Engineer's evaluation of the installation and curing data along with review of CCTV and manhole inspections.
B. Groundwater infiltration of CIPPSL shall be zero.
C. All active service connections shall be open and clear.
D. Defective CIPPSL's shall be removed and replaced with new CIPPSL's. If the replacement CIPPSL is not satisfactory to the Engineer, then remove the entire section of pipe being rehabilitated and replace it with new PVC pipe at no additional cost to the City.

END OF SECTION 330130.77

This page was intentionally left blank.

SECTION 330130.81 – MANHOLE REHABILITATION

PART 1 – GENERAL

1.01 SUMMARY:

A. The Contractor shall rehabilitate the manholes by various methods as directed by the City within the boundaries of the project.

B. When excavation in pavements is required, removal and restoration of the pavements shall be as specified by the City.

1.02 SUBMITTALS:

A. All Contractor Project Submittals shall be submitted to the City within 14 days of Notice to Proceed issuance. All submittals shall be approved by the City before the start of construction. Required submittals are as follows:

1. The Contractor shall provide manufacturer specifications, details of physical properties, and handling/storage requirements for all materials used in manhole preparation for a Chimney Liner product and installation.
2. The Contractor shall submit manufacturer certification for Chimney Liner installation.

B. The Contractor shall provide one hard copy and one electronic copy via Email, Dropbox, or USB of each shop drawing, material certification, or manufacturer's literature for review and approval by the City prior to the start of Work. The Contractor shall be required to provide submittals for all materials to be incorporated in the project.

C. The City shall review and approve all materials before the work begins. The City may approve substitution of materials, requested by the Contractor.

PART 2 - PRODUCTS

PART 3 - EXECUTION

3.01 CHIMNEY LINER:

A. General:

Installation of the Chimney Liner shall consist of cleaning and preparation of frame, adjustment rings, and cone section if present. A minimum of 12 inches shall be installed on each manhole. The liner shall cover from the top of the frame to 6 inches below the top of the cone. The entire frame, any adjustment rings present, and the top six inches of cone shall be prepared according to the manufacturer's instructions. All grade adjustment shall be sealed regardless of the depth. The Contractor shall take into account grade adjustment depth when determining unit bid price. The Chimney Liner shall have a minimum thickness of 125 mils. The liner shall be installed at a minimum of 2.5 psi for cured-in-place chimney liners. Material shall have a minimum elongation of 150%. The Chimney Liner shall be approved by the City.

1. Cured-In-Place Chimney Liners are required for all hazardous manholes as determined in the field and approved by the City.

B. Materials:

1. The Contractor shall provide the City with independent third-party testing to support the Manufacturers design. All materials, such as grouts, used in manhole preparation for the Chimney Liner installation shall conform to the recommendations of the Chimney Liner manufacturer, and shall be compatible with the chimney liner materials.

C. Manhole steps that interfere (typically, only the top step) with the installation of a Chimney Liner shall be removed. These steps are not to be re-installed. Manhole preparation shall be in accordance with the manufacturer's instructions and specification unless directed otherwise by

the City or its representative. The manhole chimney and one foot of the Corbel/Cone section is to be cleaned with a 5000-psi pressure washer. The casting shall be cleaned with a grinder. The Contractor shall capture, remove, and dispose of all waste materials related to cleaning that could potentially cause a sewer backup, damage existing facilities such as pump stations or cause sedimentation in the downstream sewer system.

D. Detailed installation instructions shall be in accordance with the manufacturer's instructions. A minimum of 2.5-psi shall be used to pressurize the liner until cured.

E. Quality Control:
   1. All installations will be subject to visual inspection by the City or its representative before project closeout and final payment. The Contractor shall correct any deficiencies identified during the visual inspection at no additional cost to the City.
   2. For Cured-In-Place Chimney Liners, a Curing Log containing a minimum of; date,time of cure, temperature, weather conditions, resin usage, and other pertinent information, shall be completed and turned in to the City Representative within 48 hours after the Cured-In-Place Chimney Liner installation.
   3. All products shall have a minimum life expectancy of 20 years.
   4. The materials shall not be applied by hand or brush.
   5. The City may require the use of a Holiday Detector to determine if the liner is 100% impervious.

F. Warranty:
   1. The Contractor shall provide the City a warranty to be in force and effect for a period of one (1) year from the date of acceptance by the City. The warranty shall require the Contractor to repair or replace the chimney liner if leakage or other failure results from faulty material and/or installation, as determined by the City.

END OF SECTION 330130.81

This page was intentionally left blank.

SECTION 330130.82 – EPOXY LINING FOR CONCRETE MANHOLES

PART 1 – GENERAL

1.01 SUMMARY:

A. Installation of Non-Cementitious Manhole Liners shall consist of cleaning the entire manhole interior surface, and removal and replacement of any defective existing steps; preparation (plugging/patching) of the manhole interior surface for lining including repair of frame seal, grade adjustment cone/wall joint, pipe seals and bench and invert as required to prepare the manhole for lining. The Contractor shall line the entire manhole interior surface with an approved lining product.

B. These specifications are intended to set a standard of quality and design for the application of non-cementitious manhole liners used in the rehabilitation of manholes.

C. The City shall approve all materials, before work starts. The City will make final approval of any proposed material

D. Definitions:

1. The term "approved" shall mean that the proposed material shall meet or exceed each of the performance criteria set forth in this specification. Manufacturers and vendors of various name brand materials shall submit proof that any proposed material will meet the guidelines and requirements of this specification.

1.02 SUBMITTALS:

A. Submittals shall be required for the following items. The City may request submittals for additional items if necessary.

1. Lining product(s)

B. Quality Control:

1. The quality and performance of the material shall be maintained by one or all of the following measures to be determined and specified by the City.
   a. Exfiltration Testing
   b. Visual Inspection
   c. Material Testing

C. Warranty:

1. The product manufacturers and the Contractor shall warrant all materials free of defects product design and workmanship for a period of one year from the date of installation. Manufacturer shall provide replacement materials for any defective product. The Contractor shall remove defective materials and install new materials per the specifications.

PART 2 - MATERIALS

A. The required characteristics of Urethane Products and Epoxy lining systems for concrete:

SOLIDS CONTENT	URETHANE 100% SOLIDS SERIES	98-100% EPOXY SYSTEMS
ELONGATION	150% minimum	1-3%
ADHESION	800 PSI	1000 PSI
VOCs	ZERO (NO TASTE ISSUES)	ZERO (NO TASTE ISSUES)

SECTION330130.82 – EPOXY LINING FOR CONCRETE MANHOLES: continued

ABILITY TO WITHSTAND SHOCK	OUTSTANDING	SATISFACTORY
LIFE EXPECTANCY	25 YEARS	25 YEARS
THICKNESS REQUIRED	160 MILS	125 MILS

B. The required characteristics of Urethane Products and Epoxy lining systems for steel:

SOLIDS CONTENT	POLYCOAT 100% SOLIDS SERIES	98-100% EPOXY SYSTEMS
ELONGATION	150%-350%	1-3%
ADHESION	1000	1600
VOCs	ZERO (NO TASTE ISSUES)	ZERO (NO TASTE ISSUES)
LOW TEMPERATURE APPLICATION	DOWN TO 35˚ F	MINIMUM 40˚ F
ABILITY TO WITHSTAND SHOCK	OUTSTANDING	SATISFACTORY
LIFE EXPECTANCY	25 YEARS	25 YEARS
THICKNESS REQUIRED BY AWWA	25 MILS	20 MILS

PART 3 - EXECUTION

3.01 SURFACE PREPARATION:

A. All surfaces to be coated shall be clean and dry and shall meet the recommendations of the coating manufacturer for surface preparation. Freshly coated surfaces shall be protected from dust and other contaminants. Oil and grease shall be completely removed by use of solvents or detergents before mechanical cleaning is started. The gloss on previously coated surfaces shall be dulled if necessary for proper adhesion of topcoats.

B. Surfaces shall be free of cracks, pits, projections, or other imperfections that would interfere with the formation of a smooth, unbroken coating film, except for concrete block construction where a rough surface is an inherent characteristic.

C. When applying touchup coating or repairing previously coated surfaces, the surfaces to be coated shall be cleaned as recommended by the coating manufacturer, and the edges of the repaired area shall be feathered by sanding or wire brushing to produce a smooth transition that will not be noticeable after the coating is applied.

3.02 MIXING AND THINNING:

A. Coating shall be thoroughly mixed each time any is withdrawn from the container. Coating containers shall be kept tightly closed except while coating is being withdrawn.

B. Coating shall be factory mixed to proper consistency and viscosity for hot weather application without thinning. Thinning will be permitted only as necessary to obtain recommended coverage at lower application temperatures. In no case shall the wet film thickness of applied coating be reduced, by addition of coating thinner or otherwise, below the thickness recommended by the coating manufacturer. Thinning shall be done in compliance with all applicable air quality regulations.

3.03 APPLICATION:

A. Coating shall be applied in a neat manner that will produce an even film of uniform and proper thickness, with finished surfaces free of runs, sags, ridges, laps, and brush marks. Each coat shall be thoroughly dry and hard before the next coat is applied. Each coat shall be a different color, if available. In no case shall coating be applied at a rate of coverage greater than the maximum rate recommended by the coating manufacturer.

1. Epoxy:
   a. When used, epoxy shall be applied in accordance with the coating manufacturer's recommendations, including temperature limitations and protection from sunlight until top-coated.
   b. When applying high build epoxy coatings with a roller or brush and where a dry film thickness of at least 4-6 mils per coat is required, two or more coats shall be applied to achieve the recommended dry film thickness equal to a spray applied coating.

B. Film Thickness:

1. The total coating film thickness including primer, intermediate coats and finish coat, shall not be less than recommended by manufacturer and shall be not less than the following:

Type of Coating	Minimum Dry Film Thickness
Epoxy	
Pipe interior	20 mils
Pipe exterior and support structures	28 mils (25 mils DFT for epoxy plus 3 mils DFT for aliphatic polyurethane)
Flake-filled epoxy (two coats)	30 mils

C. Coatings shall not be applied, except under shelter, during wet, damp, or foggy weather, or when windblown dust, dirt, debris, or insects will collect on freshly applied coating.

3.04 PROTECTION OF SURFACES:

A. Throughout the work Design-Builder shall use drop cloths, masking tape, and other suitable measures to protect adjacent surfaces. Design-Builder shall be responsible for correcting and repairing any damage resulting from its or its subcontractors' operations. Coatings spilled or spattered on adjacent surfaces which are not being coated at the time shall be immediately removed. Exposed concrete or masonry not specified to be coated which is damaged by coatings shall be either removed and rebuilt or, where authorized by the City, coated with two coats of masonry coating.

3.05 FIELD QUALITY CONTROL:

A. The following inspection and testing shall be performed:

1. Surface profile, visual inspection, adhesion testing, and wet and dry film thickness testing. The City shall be notified to allow the City the opportunity to witness the

inspection and testing. All inspection and testing records shall be available to the City for review.

2. Visual Inspection. The surface of the protective coatings shall be visually
3. Film Thickness:
   a. Coating film thickness shall be verified by measuring the film thickness of each coat as it is applied and the dry film thickness of the entire system. Wet film thickness shall be measured with a gauge that will measure the wet film thickness within an accuracy of ±0.5 mil. Dry film thickness shall be measured in accordance with SSPC-PA 2.

END OF SECTION 330130.82

This page was intentionally left blank.

Section 330130.86 – MANHOLE RIM ADJUSTMENTS

PART 1 - SUMMARY

1.01 SUBMITTALS:

A. The Contractor shall provide one hard copy and one electronic copy via Email, Dropbox, or USB of each shop drawing, material certification, or manufacturer's literature for review and approval by the City prior to the start of Work. The Contractor shall be required to provide submittals for all materials to be incorporated in the project.

B. The City shall review and approve all materials before the work begins. The City may approve substitution of materials, requested by the Contractor.

PART 2 - PRODUCTS

PART 3 - EXECUTION

3.01 SCOPE OF WORK:

A. Manhole Frame and Cover Remove and Replace:
   1. The work includes removing the existing frame and cover and installing a new frame, cover seal, and locking cover, and adjusting to grade.

B. Manhole Frame and Cover Adjustment (includes first foot of new masonry):
   1. The work includes adjusting manholes to grade as called out in the Standard Manhole Detail.
   2. If a manhole to be adjusted to grade is located within pavement, the Contractor shall be responsible for removing pavement to allow for one foot of adjustment, and replace the pavement to the existing, or higher, quality. The replacement shall be approved by the City.

C. Install New Manhole Cover:
   1. The work includes installing a new cover seal and locking cover and cleaning the existing frame. The existing frame shall be cleaned with high pressure water blasting with a minimum of 3500 psi. If needed, the casting shall be grounded to remove any debris or frame material that prevents proper seating of the cover in the frame. If a manhole to be adjusted is in pavement, a non-rocking style lid shall be installed if not already.

D. Adjust Manhole to Grade:
   1. The work includes adjusting manholes to grade as called out in the Standard Manhole Detail.
   2. If a manhole to be adjusted to grade is located within pavement, the Contractor shall be responsible for removing pavement to allow for the adjustment, and replace the pavement to the existing, or higher, quality. The replacement shall be approved by the City.
   3. The maximum adjustment ring height is 24". Any more adjustment will require the addition of a barrel section.

E. Pavement:
   1. Payment for pavement will be made at the respective unit bid price for the type of pavement being replaced.

F. Locate Buried Manholes

END OF SECTION 330130.86

This page was intentionally left blank.

SECTION 330524 - UTILITY CASINGS

PART 1 - GENERAL

1.01 SUMMARY:

A. This Section includes casing pipe, installed by boring and jacking, carrier pipe alignment skids, sand fill, and end seals where indicated or where constructed at Contractor's option. Use when required to pass other utilities, streets, highways, railroads or obstructions without open excavation.

1.02 REFERENCES:

A. Applicable Standards:
   1. American Petroleum Institute (API):
      a. API RP1102 - Recommended Practice for Liquid Petroleum Pipelines Crossing Railroads and Highways.
      b. API 1104 - Standard for Welding Pipelines and Related Facilities.
   2. American Society for Testing and Materials (ASTM):
      a. A36 - Carbon Structural Steel.
      b. A570 - Hot-Rolled Carbon Steel Sheet and Strip, Structural Quality.
      c. C32 - Sewer and Manhole Brick (Made from Clay or Shale).
      d. C270 - Mortar for Unit Masonry.
   3. American Water Works Association (AWWA):
      a. C200 - Steel Water Pipe 6 Inches and Larger.
      b. C206 - Field Welding of Steel Water Pipe.
   4. Society for Protective Coatings (SSPC):
      a. SP-3 - Power Tool Cleaning.

1.03 SUBMITTALS:

A. Submit as specified in DIVISION 1.
B. Submit the following for acceptance prior to shipment:
   1. Pipe alignment guides.
   2. Guide spacer bands.
C. Affidavits:
   1. Furnish for acceptance prior to shipment to jobsite.
   2. Certify compliance with applicable standards for the following:
      a. Casing material.
      b. Casing paint coating/lining system.

PART 2 - PRODUCTS

2.01 MATERIALS:

A. Casing Pipe:
   1. New, smooth wall, welded steel pipe fabricated from ASTM A36 plate or ASTM A570 sheet with a minimum yield point of 36,000 psi, conforming to AWWA C200. Furnish pipe with minimum wall thickness as follows:

SECTION 330524 - UTILITY CASINGS: continued

2. Minimum Casing Thicknesses:

Casing Diameter in.	Wall Thickness Under Highways in.	Under Railroads in.
Under 14	0.188	0.250
14 and 16	0.188	0.281
18	0.250	0.312
20	0.250	0.344
22	0.250	0.375
24	0.281	0.406
26	0.281	0.438
28 and 30	0.312	0.469
32	0.312	0.500
34	0.312	0.531
36	0.344	0.531
38, 40 and 42	0.344	0.563

3. See Standard Detail #4 for Casing Pipe and End Seal Detail.
4. Minimum casing inside diameter shall exceed the maximum diameter at the joint assembly at a minimum of 4-inches.
5. Casing shall be no smaller than 1.5 times the diameter of the carrier pipe.
6. Schedule:

Location	Carrier Pipe Diameter	Carrier Pipe Material	Carrier Joint Diameter	Casing Diameter	Casing Min. Thickness

B. Coatings and Linings:
   1. Coat exterior and line interior of all casing pipe with iron oxide primer applied at 1.5 mils minimum thickness.
   2. Hold coatings back from end joints to be welded at least 2 inches each side of joint.

C. Joints:
   1. All joints in steel pipe casings shall be field welded to conform to API 1104 or AWWA C206.
   2. Clean to SSPC-SP3 and apply iron oxide field coating to all exterior joints after field welding.
   3. Clean to SSPC-SP3 and apply iron oxide field coating to all interior joints on casings 24-inch diameter and larger after field welding.

PART 3 - EXECUTION

3.01 INSTALLATION:

A. All Work shall, as a minimum, meet the requirements of API RP1102 and the highway, railroad, or utility having jurisdiction, and shall be subject to their inspection and approval.

B. Install Casing Pipes:
   1. By boring with continuous flight auger, pneumatic or hydraulic jacking, or other acceptable method. Reinforce leading end of casing with jacking band.

2. Including measures for maintaining indicated line and grade for casings less than 24-inch diameter within a plus or minus tolerance of 0.5%. Maintain indicated line and grade for casings 24-inch and larger within a plus or minus tolerance of 3 inches over length of casing.
3. With working pits of adequate size to provide safe working conditions. Install sheeting and bracing to conform to DIVISION 31.
4. In such a manner as not to disrupt traffic or damage the roadway grade or surface.
5. Casings rejected due to misalignment or other failures to conform to Specifications shall be abandoned in place and filled with concrete grout. Casing pipe shall not be recovered for reuse.

3.02 PIPE ALIGNMENT SKIDS:

A. Furnish skids for pipe alignment guides as indicated for all carrier pipe to be installed in casing.
   1. Minimum spacing of skids shall be 10 feet or every pipe joint, whichever is the lesser.
   2. Size to fit outside diameter of carrier pipe and inside diameter of casing pipe.
   3. Skids to be sized slightly larger than carrier pipe's outside joint diameter.

B. Provide either of the following:
   1. Hardwood timber skids notched for steel bands. Permanently attach each pair of skids with two 3/4-inch wide stainless steel bands. Wiring is not permitted.
   2. Stainless steel casing spacers with plastic runners, Cascade Waterworks Style CCS or Engineer-approved equal.

3.03 SAND FILL AND END SEALS:

A. Construct end seals (and fill annual space between carrier pipe and casing with dry sand) as indicated and as follows:
   1. After inside of casing has been thoroughly cleaned and approved by Engineer.
   2. After carrier pipe has been permanently placed inside casing, tested, and approved.
   3. Place dry sand by Engineer-approved method and equipment.
   4. Brick end seals shall conform to ASTM C32, Grade MS. Mortar shall conform to ASTM C270, Type M, with Type II portland cement and Type S lime.
   5. Gasket boot end seals are acceptable and shall be installed to manufacturer’s standards.

END OF SECTION 330524

This page was intentionally left blank.

SECTION 331100 – PRESSURE PIPE

PART 1 - GENERAL

1.01 SUMMARY:

A. This Section includes all pressure pipe, fittings, specials, and appurtenances.

B. Related Work Specified Elsewhere:

1. Section 333150 - Pipe Installation.
2. Section 331216 – Utility Valves and Accessories.

1.02 REFERENCE STANDARDS:

A. Applicable Standards:

1. American Association of State Highway and Transportation Officials (AASHTO).
2. American Water Works Association (AWWA):
   a. AWWA C104 - Cement-Mortar Lining for Ductile-Iron Pipe and Fittings for Water.
   b. AWWA C110 - Ductile-Iron and Gray-Iron Fittings.
   c. AWWA C111 - Rubber-Gasket Joints for Ductile-Iron Pressure Pipe and Fittings.
   d. AWWA C115 - Flanged Ductile-Iron Pipe with Ductile-Iron or Gray-Iron Threaded Flanges.
   e. AWWA C150 - Thickness Design of Ductile-Iron Pipe.
   f. AWWA C151 - Ductile-Iron Pipe, Centrifugally Cast, for Water.
   g. AWWA C153 - Ductile-Iron Compact Fittings.
   h. AWWA C219 - Bolted, Sleeve-Type Couplings for Plain-End Pipe.
   i. AWWA C606 - Grooved and Shouldered Joints.
   j. AWWA C900 - Polyvinyl Chloride (PVC) Pressure Pipe and Fabricated Fittings, 4 In. Through 12 In.
   k. AWWA C905 - Polyvinyl Chloride (PVC) Pressure Pipe and Fabricated Fittings, 14 In. Through 48 In.
   l. AWWA C907 - Polyvinyl Chloride (PVC) Pressure Fittings for Water-4 in. through 12 In. for Water Distribution.
   m. AWWA M23 - PVC Pipe-Design and Installation.
   n. AWWA M41 - Ductile-Iron Pipe Fittings.
3. American National Standards Institute (ANSI):
   a. ANSI B16.1 - Gray Iron Pipe Flanges and Flanged Fittings: Classes 25, 125, and 250.
   b. ANSI B16.21 - Nonmetallic Flat Gaskets for Pipe Flanges.
4. American Society for Testing and Materials (ASTM):
   a. ASTM A307 - Standard Specification for Carbon Steel Bolts, Studs, and Threaded Rod 60000 PSI Tensile Strength.
   b. ASTM D1248 - Standard Specification for Polyethylene Plastics Extrusion Materials for Wire and Cable.
   c. ASTM F477 - Standard Specification for Elastomeric Seals (Gaskets) for Joining Plastic Pipe.
   d. ASTM G62 - Standard Test Methods for Holiday Detection in Pipeline Coatings.
5. National Sanitation Foundation (NSF):
   a. NSF 61 - Drinking Water System Components - Health Effects.

1.03 SUBMITTALS:

A. Submit as specified in Division 01.

B. Submit the following for acceptance prior to fabrication:

SECTION 331100 – PRESSURE PIPE: continued

1. Pipe and joint details.
2. Special, fitting, and coupling details.
3. Laying and installation schedule.
4. Specifications, data sheets, and affidavits of compliance for protective shop coatings and linings.
5. Manufacturer's design calculations including, but not limited to, wall thickness and deflection under specified live and dead loads.

C. Certificates and Affidavits: Furnish the Following Prior to Shipment:
1. Affidavit of compliance with applicable standard.
2. Certificate or origin for all steel flanges. Flanges shall be manufactured in the U.S.A.
3. Test certificates.

1.04 QUALITY ASSURANCE:

A. All grooved/shouldered joint couplings, fittings, adapter rings and specialties shall be the products of a single manufacturer. Grooving tools shall be of the same manufacturer as the grooved couplings.

B. All castings used for grooved/shouldered coupling housings, fittings, etc., shall be date stamped for quality assurance and traceability.

PART 2 - PRODUCTS

2.01 PIPE REQUIREMENTS:

A. Furnish pipe of materials, joint types, and sizes as indicated or specified.

B. Pipe shall be designed to withstand all stresses resulting from external loads and internal pressures.

C. Pipe Marking: All pipe and fittings shall be marked conforming to the applicable standard specification under which the pipe is manufactured and as otherwise specified.

2.02 DUCTILE-IRON PIPE:

A. Design and Manufacture of Pipe:
1. Ductile-iron pipe shall conform to AWWA C115, C150 and C151 except as otherwise specified.
2. With laying condition Type 5 for ductile iron for load requirements tabulated herein.
a. Use E' of 700 and bedding angle of 90°.
b. 3% deflection limit.
c. Add service allowance and standard casting tolerances of AWWA C150 and AWWA C151.
d. Select standard pressure class thickness next above total calculated thickness.
3. Minimum thickness for ductile-iron pipe threaded for screw-on flanges shall be in accordance with AWWA C115.
4. Pipe with grooved barrel for any type of restrained joint shall have wall thickness increased to provide a minimum wall thickness conforming to AWWA C606.

B. Joints:
a. Mechanical and Push-On Type: Provide mechanical or push-on-type joints for all buried pipe less than 30 inches in diameter unless otherwise specified or indicated. Provide push-on-type joints for sizes 30 inches in diameter and greater
b. Joints shall conform to AWWA C111.
2. Flanged:

SECTION 331100 – PRESSURE PIPE: continued

a. Provide flanged joints for all interior pipe except where otherwise specified or indicated.
b. Flanges for pipe shall be ductile iron and conform to the applicable provisions of AWWA C110 and C115 and shall be drilled ANSI B16.1 Class 125.
c. Pipe with victaulic-style couplings and rigid joints conforming to AWWA C606 may be substituted for Class 125 flanged pipe where suitable.

3. Sleeved or Coupled:
   a. Provide for sleeves or couplings where indicated.
   b. Furnish pipe ends suitable for receiving style of sleeve or coupling indicated or specified.
   c. Provide anchored couplings where restraint is required to withstand specified operating or hydrostatic test pressure and where indicated.
4. Restrained:
   a. Furnish for all fittings and where joint restraint is required to offset internal pipeline forces.
   b. Provide restrained joints of following approved types:
      (1) Restrained mechanical and push-on joint.
      (2) Cut grooved type for rigid joint conforming to AWWA C606.
      (3) Anchored couplings.
   c. Restrained joints shall be Flex-Ring or Lok-Ring restrained joint by American Ductile Iron Pipe, TR FLEX or HP Lok restrained joint by U.S. Pipe, or equal.
   d. Mechanical joint retainer glands shall not be used where joint restraint is required unless indicated. When indicated, retainer glands shall be Megalug Model 1100 by EBAA Iron, Inc. or approved equal.

C. Fittings:
1. Fittings shall conform to AWWA C110 and shall have a pressure rating of not less than that specified for pipe.
2. Fittings shall be ductile iron.
3. Fittings for pipe with mechanical joint shall have mechanical joints.
4. Fittings for pipe with push-on joints shall be mechanical joint or push-on-type joint.
5. Fittings for pipe with grooved type joint shall have cut grooved type rigid joints per AWWA C606.
6. Include all specials, taps, plugs, flanges, and wall fittings as required.
7. Provide openings for air valve, drain, sampling, sensing, testing, and other connections with threaded bosses or flange outlets sized and located where indicated. Provide tangent blow-off and drain assemblies where indicated. Outlet size shall be 6 inches and have flanged end.

D. Lining:
1. All pipe and fittings for water shall be cement-mortar lined in accordance with AWWA C104.

E. Lining:
1. Pipe and Fittings.

F. Coating:
1. All iron pipe and fittings shall be coated with manufacturer's standard bituminous paint coating.
2. Flange faces shall be coated in accordance with AWWA C115.

SECTION 331100 – PRESSURE PIPE: continued

2.03 STEEL PIPE:

A. Design of Pipe: Design shall conform to AWWA C200, AWWA M11, and as specified except that hydrostatic test of fittings after fabrication will not be required. Fittings shall be tested by dye penetrant method.
   1. Nominal length of pipe section shall be not less than 35 feet nor more than 40 feet. Shorter sections shall be used where required and where otherwise approved.
   2. External Loading:
      a. Earth dead load cover at 120 pcf plus AASHTO H-20 live loads. Use Cooper E-80 live loads for railroad crossings.
      b. Use 100% of earth prism above the pipe.
      c. 2% initial deflection limit and 1.5 time lag factor.
      d. Bedding condition as indicated.
   3. Use E' of 700 and bedding angle of 90°.
   4. Allowable design stresses for steel shall be as follows:
      a. 50% of minimum yield stress when subjected to working pressure.
      b. 70% of minimum yield stress when subjected to working pressure plus surge.
   5. Allowable design deflection shall be 2% of mean diameter.
   6. Deflection lag factor shall be 1.25 for the dead load and 1.0 for live loads.

B. Joints:
   1. Push-On Type:
      a. Provide push-on-type joints for all buried pipe unless otherwise specified or indicated.
      b. Joints shall conform to AWWA C200.
   2. Flanged:
      a. Provide certificate of origin for all flanges.
      b. Provide flanged joints for all interior and exposed exterior pipe except where otherwise specified or indicated.
      c. Joints shall conform to AWWA C200 and AWWA C207.
      d. Flanges shall have a pressure rating not less than that required for pipe. Flanges shall be Class D and be drilled ANSI B16.1 Class 125.
      e. Pipe with AWWA C606 shouldered-type joints may be substituted for Class D flanged pipe.
   3. Sleeved or Coupled:
      a. Provide for sleeves or couplings where indicated.
      b. Furnish pipe ends suitable for receiving style of sleeve or coupling indicated or specified.
      c. Provide anchored couplings where restraint is required to withstand specified operating or hydrostatic test pressure and where indicated.
   4. Restrained: Furnish where joint restraint is required to offset internal pipeline forces. Shouldered type joints for victaulic-style couplings shall be rigid and conform to AWWA C606. Roll grooved type joints shall not be used.

C. Fittings and Specials:
   1. Fabricate from tested pipe to conform to AWWA C208 except where otherwise indicated or specified.
   2. Design to withstand internal and external loading specified for pipeline in which located.
   3. Reinforce tees, laterals, and outlets conforming to applicable provisions of AWWA M11.
   4. Include wall fittings with approved anchor ring where indicated.
   5. Include all adapters, outlets, taps, plugs, and other specials as required to complete installation as specified or indicated.

6. Provide openings for air valve, drain, sampling, sensing, testing, and other connections with threaded bosses or flanged outlets sized and located where indicated.
7. Provide tangent blow-off assemblies where indicated. Outlet size shall be 6 inches and have flanged end.

D. Test Plugs:
1. Provide pressure test plugs where required to test the installation.
2. Design test plugs to withstand the internal and external loading.
3. Join test plug to pipe and tie as required to sustain internal and external loading.

E. Lining:
1. All pipe and fittings shall be lined with fusion-bonded epoxy to conform to AWWA C213.
2. Termination of lining at ends shall be as follows:
   a. End of steel on spigot, flanged, or plain end.
   b. Anticipated termination of mating spigot on bell end of push-on type joints.

F. Coating:
1. All pipe and fittings for buried service shall be coated with epoxy to conform to AWWA C213.
2. Flange faces shall be coated with one of the following rust preventive compounds:
   a. Houghton "Rust Veto 344."
   b. Rust-Oleum "R-9."
   c. Engineer-approved equal.
3. All pipe and fittings for exposed exterior installation shall be shop finish coated in conformance with AWWA C218.

G. Marking Pipe: In addition to the marking specified in paragraph "Pipe Marking," the following information shall be on all pipe, fittings, and specials:
1. Design pressure in feet.
2. Point of installation on all fittings and specials.
3. Length of any short pipe.

2.04 PVC PIPE:

A. Materials:
1. Materials shall conform to AWWA C900 for all major crossings and depths of 9 feet and more. For pressure mains less than 9 feet deep, Class 200 PVC is acceptable.
2. Gaskets shall conform to ASTM F477 and be synthetic rubber.

B. Design of Pipe: Design shall conform to AWWA C900 and as specified:
1. Internal Loading:
   a. Internal pressure specified plus allowance for surge pressure conforming to AWWA C900.
   b. Hydrostatic test pressure as specified.
2. External Loading:
   a. Earth dead load cover at 120 pcf plus AASHTO H-20 live loads.
   b. 5% deflection limit.
   c. Bedding condition as indicated.
3. Use E' of 700 and bedding angle of 90°.

C. Diameters: PVC pressure pipe shall have Cast-Iron-Pipe-Equivalent (CI) outside diameters.

D. Joints: Pipe shall be furnished with integral bell-type pipe ends designed for joint assembly using elastomeric gaskets.

E. Fittings:

1. Fittings shall conform to AWWA C110 or C153 and be ductile iron. Fittings shall be mechanical joint or push-on-type joint.
2. Fittings for 4-inch through 8-inch pipe shall be injection-molded PVC with push-on-type joint, Class 150, conforming to AWWA C907.

F. Marking: Identification markings on pipe shall conform to AWWA C900.

2.05 SLEEVES AND COUPLINGS:

A. Sleeves:
1. AWWA C110 mechanical joint ductile-iron solid-sleeve type:
   a. Pipe end space shall not exceed one-third of the sleeve laying length.
   b. Interior, exposed, exterior, or buried service as indicated.

B. Couplings:
1. Center sleeve and compression gland-type end ring conforming to AWWA C219.
2. Center sleeve shall be without pipe stop.
   Couplings for joining steel pipe shall be steel.
3. Couplings for joining direct buried, exposed exterior, vault or pit installations of iron, or PVC pipe up to 12-inch diameter shall be iron. Provide lined and coated steel couplings for larger pipe diameters.
4. Couplings for exposed interior iron or PVC pipe may be steel or iron.
5. Fastener bolts shall be stainless steel for iron couplings and high-strength, low-alloy steel for steel couplings. Bolts for direct buried coupling installations shall be stainless steel.
6. Center sleeve and end rings shall be:
   a. Ductile or malleable iron for iron couplings.
   b. Steel for steel couplings.
7. Lining and Exterior Coating:
   a. Use for all steel couplings intended for direct bury, exposed exterior, vault or pit installations.
   b. Completely coat center sleeve and end rings.
   c. Two-part epoxy or nylon fuse-coated to a minimum 10 mils thickness.
   d. Line interior of all steel couplings intended for exposed-interior installations. Coat exterior with normal shop coating.

C. Flanged Coupling Adapters:
1. Flanged end and body to be one unit conforming to AWWA C219. Coupling end to be compression gland type with follower ring.
2. Adapters for joining direct buried, exposed exterior, vault or pit installations of iron pipe shall be iron.
3. Adapters for joining exposed interior iron pipe may be steel or iron.
4. Flanged end bolt circle, bolt size, and spacing shall conform to the applicable provisions of ANSI B16.1 and shall be drilled Class 125 for iron adapters. Flanges on steel adapters shall be AWWA C207, Class D, drilled ANSI B16.1 Class 125.
5. Bolts and nuts shall be ductile iron for iron adapters and high-strength, low-alloy steel for steel adapters.
6. Anchor studs shall not be used where joint restraint is required. Furnish adapters with tie rod harness assemblies where indicated.
7. Lining and Exterior Coating for Steel Adapters:
   a. Two-part epoxy or nylon fuse-coated to a minimum 10 mils thickness.
   b. Completely coat adapter sleeve and end follower gland plus line interior for adapters intended for exposed exterior, vault or pit installations.

c. Line interior of all adapters intended for exposed interior installations. Coat exterior with normal shop coating.

D. Expansion Joint Couplings:
1. Furnish steel pipe expansion joints where indicated.
2. Slip-pipe's exterior section, which is in contact with the packing, is to be hard chrome-plated on a machined surface.
3. Furnish with limit rods where joint restraint is required.
4. Lining and Exterior Coating:
   a. Normal shop coating.
   b. Line slip-pipe with epoxy.
   c. Line body-pipe with epoxy.
5. Bolts and limit rods shall be stainless steel.
6. Acceptable manufacturers are as follows:
   a. Dresser Industries, Inc. - Style 63.
   b. Rockwell International Corp. - Type 611 or 612.
   c. Ford Style 811 or 812, Ford Meter Box Company, Inc.
   d. Engineer-approved equal.

E. Anchored Couplings:
1. Furnish where joint restraint required to offset internal pipeline forces.
2. Provide harnessed sleeve couplings and flanged coupling adapters with tie rod harnesses where indicated.
   a. Harnesses shall consist of lugs or clamps welded or otherwise securely fastened to opposite joint elements with tie bolts between opposing lugs. "Dog ear" lugs shall be fabricated as indicated.
   b. Design of harnesses for steel pipe shall conform with applicable provisions of AWWA M11.
3. Provide expansion couplings with limit rods.
4. Provide couplings for grooved and shouldered type joints conforming to AWWA C606.
   a. Furnish grooved ends on ductile-iron end pipe.
   b. Furnish shouldered ends on steel pipe.
5. Mechanical joint retainer glands shall not be used where joint restraint is required unless indicated. When indicated, retainer glands shall be MegaLug Model 1100 by EBAA Iron, Inc., or Engineer approved equal.
6. See Standard Detail #2 for Anchor Coupling Detail.

F. Insulated Couplings:
1. Couplings shall be insulated to prevent electrical conductivity where indicated.
2. Insulated coupling design shall be otherwise conforming to the standard types and styles specified.

G. Dismantling Couplings (Dismantling Joint):
1. Consists of a mechanical joint fitting located between two pipe flanges with restraining rods across the mechanical joint section, providing a restrained system with integral space for removal of adjacent equipment.
2. Shall conform to AWWA C-219.
3. Materials shall be steel.
4. When connected to DIP system, install insulating flange kit.
5. Coating finish shall be fusion-bonded epoxy.

SECTION 331100 – PRESSURE PIPE: continued

2.06 GASKETS AND BOLTING MATERIALS:

A. Provide all gaskets, bolts, lubricant, and other accessories required to install pipe, fittings, and specials complete and ready for service.

B. Gaskets for flanged joints shall conform to ANSI B16.21, American Cast Iron Pipe Company Toruseal 1/8-inch thick full-face gasket Provide full-face gaskets for all pump and equipment connections.

C. Gaskets for ductile iron flanged pipe and fittings 12 inch and smaller shall have "nominal" inside diameters, not the larger inside diameters per ANSI B16.21.

D. Bolts for flanged joints shall conform to ASTM A307, Grade B. Nut and bolt heads shall be hexagonal.

E. Gaskets and bolts for other than flanged joints shall be as otherwise specified for pipe and pipe joints.

F. Gaskets for grooved and shouldered couplings shall be flushseal shaped with a center leg. Coupling gaskets are to be molded of synthetic rubber specially compounded to conform to pipe surfaces for the application. Elastomers shall have properties as designated in ASTM D2000 and conform to AWWA C606.

G. Bolts for grooved and shouldered coupling joints shall be heat treated zinc plated carbon steel, track head, conforming to the physical properties of STM A183, minimum tensile strength 110,000 PSI.

2.07 TRACER WIRE

A. A minimum of 12-gauge single strand conductive tracer wire shall be installed as a tracer wire. All wire splices shall be made with either rigid fittings or weatherproof connectors specifically designed for direct burial.

   a. A 4’ copper grounding rod shall be driven into the trench bottom at 300 foot spacing, at the location where the pressurized pipe crosses property lines or changes direction and secured to the tracer wire with rigid fittings

2. Tracer wires for sewer laterals shall extend from a minimum 1’ grounding rod driven into the trench bottom at the point of connection to the sewer main to the clean out. The tracer wire shall be extended to the surface adjacent to the clean out and housed within a protective enclosure constructed of schedule 40 PVC pipe and a schedule 40 PVC threaded clean out. The protective enclosure shall be extended to grade and installed so that it is easily accessible.

3. Tracer wires for all other pressurize pipe shall be extended to the surface within a protective enclosure construct out of a suitable length of 6-inch diameter class 200 PVC and a cast iron mushroom cap. This protective enclosure shall not be located within any driving or parking surface.

   a. A 4’ copper grounding rod shall be driven into the trench bottom at 300 foot spacing, at the location where the pressurized pipe crosses property lines or changes direction and secured to the tracer wire with rigid fitting

2.08 SEWER MARKERS:

A. An aboveground wire station riser shall consist of a thermoplastic dome marker of a height of at least 36-inches above ground. These shall be placed every 1,000 feet, and at the location where the pressurized pipe crosses property lines or changes direction.

SECTION 331100 – PRESSURE PIPE: continued

PART 3 - EXECUTION

3.01 INSTALLATION:

A. Specified in Section 333150.

3.02 FIELD TESTING:

A. Specified in Section 333150.

END OF SECTION 331100

This page was intentionally left blank.

SECTION 331216 - UTILITY VALVES AND ACCESSORIES

PART 1 - GENERAL

1.01 SUMMARY:

A. This Section includes all valves and accessories.

1.02 RELATED WORK SPECIFIED ELSEWHERE:

A. Pipe Installation: SECTION 333150.

1.03 REFERENCES:

A. Applicable Standards:

1. American National Standards Institute (ANSI):
   a. B16.1 - Cast-Iron Pipe Flanges and Flanged Fittings, Class 25, 125, 250 and 800.
2. American Society for Testing and Materials (ASTM):
   a. A126 - Gray Iron Castings for Valves, Flanges and Pipe Fittings.
   b. A276 - Stainless and Heat Resisting Steel Bars and Shapes.
   c. A536 - Ductile Iron Castings.
   d. A564 - Hot-Rolled and Cold-Finished Age-Hardening Stainless and Heat Resisting Steel Bars and Shapes.
3. American Water Works Association (AWWA):
   a. C111 - Rubber-Gasket Joints for Ductile-Iron Pressure Pipe and Fittings.
   b. C207 - Steel Pipe Flanges for Waterworks Service - Sizes 4 Inch Through 144 Inch.
   c. C500 - Metal-Seated Gate Valves for Water Supply Service.
   d. C502 - Dry-Barrel Fire Hydrants.
   e. C504 - Rubber-Seated Butterfly Valves.
   f. C507 - Ball Valves, 6 Inch Through 48 Inch.
   g. C508 - Swing-Check Valves for Waterworks Service, 2 Inch through 24 Inch NPS.
   h. C509 - Resilient-Seated Gate Valves for Water Supply Service.
   i. C512 - Air-Release, Air/Vacuum, and Combination Air Valves for Waterworks Service.
   j. C517 – Resilient-Seated Cast-Iron Eccentric Plug Valves.
   k. C540 - Power-Actuating Devices for Valves and Sluice Gates.
   l. C550 - Protective Epoxy Interior Coatings for Valves and Hydrants.
   m. C600 - Installation of Ductile-Iron Water Mains and Their Appurtenances.
   n. C606 - Grooved and Shouldered Joints.
4. National Fire Protection Association (NFPA):
   a. 1963 - Screw Threads and Gaskets, Fire Hose Connections.

1.04 SUBMITTALS:

A. Submit as specified in DIVISION 1.

B. Include, but not limited to, the following:

1. Catalog data or illustrations showing principal dimensions, parts, and materials.
2. Spare parts list referenced to illustration of parts.
3. Assembly and disassembly or repair instructions.
4. Dimensions of the clearance required for butterfly valve discs.

C. Certificates and Affidavits: Furnish prior to shipment. Include the following:

1. Test certificates.
2. Affidavit of compliance with applicable AWWA Standard.

SECTION 331216 - UTILITY VALVES AND ACCESSORIES: continued

1.05 DELIVERY, STORAGE, AND HANDLING:

A. Ship all valves with suitable end covers to prevent entrance of foreign material into valve body.
B. Protect valve threads, flanges, stems, and operators from damage.
C. Ship valves 2-1/2-inch and larger to the Project Site tagged with the valve number shown on the Drawings. Tag smaller valves to show the piping system in which it is to be used.

1.06 RESPONSIBILITY:

A. Actuators, their controls, and accessories shall be the responsibility of the valve manufacturer for sizing, assembly, certification, field testing, and any adjustments necessary to operate the valve as specified.

PART 2 - PRODUCTS

2.01 MECHANICAL JOINT RESTRAINT:

A. Acceptable Manufacturers:
   1. EBAA Iron Megalug.
   2. Engineer approved equal.

2.02 THRUST BLOCKS:

A. See Standard Detail #23 for Thrust Block Detail.

2.03 DOUBLE-DISC GATE VALVES:

A. Acceptable Manufacturers:
   1. Mueller Company.
   2. Clow Valve Company.
   3. Engineer approved equal.
B. Design:
   1. Conform to AWWA C500 and as specified.
   2. Double-disc type.
   3. Non-rising stem seals shall be double O-ring type.
C. Actuators:
   1. All valves shall open counterclockwise.
   2. Provide indicators on OS&Y valves to show position of gate.
D. Testing:
   1. Testing shall be performed conforming to AWWA C500.
   2. Furnish affidavit of compliance.
E. Valve Schedule:

No.	Type	Size	Location	Installation	Valve Ends	Actuator Type	Valve Stem Position

F. Valve Accessories:
   1. Furnish rollers, tracks and scraper for valves installed with stem in horizontal position in a horizontal line.
   2. Furnish double square bottom design for valves installed with stem in horizontal position in a vertical line.

3. Furnish all valves 16-inch and larger with bypass gate valve.
4. Cleanouts.
5. Bevel or spur gears.
6. Electric motor actuators.

2.04 RESILIENT-SEATED GATE VALVES:

A. Acceptable Manufacturers:
1. Clow Valve Company.
2. Mueller Company.
3. Engineer approved equal.

B. Design:
1. Conform to AWWA C509 and as specified.
2. All stem seals shall be double O-ring type.

C. Actuators:
1. All valves shall open counterclockwise.
2. Provide indicators on OS&Y valves to show gate position.

D. Interior Coating:
1. Conform to AWWA C550.
2. Apply to all interior ferrous metal surfaces.

E. Testing:
1. Testing shall be performed conforming to AWWA C509.
2. Furnish affidavit of compliance.

F. Valve Schedule:

No.	Type	Size	Location	Installation	Valve Ends	Actuator Type	Valve Stem Position

G. Valve Accessories:
1. Post Indicator.
2. Electric Motor Actuators. Conform to AWWA C540.

2.05 BUTTERFLY VALVES:

A. Acceptable Manufacturers:
1. DeZurik, a unit of General Signal Corporation.
2. Henry Pratt Company.
3. Engineer approved equal.

B. Design:
1. Conform to AWWA C504, AWWA C540, and as specified.
2. Suitable for type of installation specified.
3. Conform to criteria indicated in Design Data and Valve Schedule Tables.
4. All valve end flanges shall conform to the following:
   a. ANSI B16.1, Class 125 for cast-iron body, Class 25A through Class 150B valves.
   b. AWWA C207, Class D with ANSI B16.1 Class 125 drilling for steel body, Class 25A through Class 150B valves.

c. ANSI B16.1, Class 125 for ductile-iron bodies.
d. AWWA C207, Class E for steel body, Class 250 valves.

5. Mechanical or push-on type rubber-gasket joint ends shall conform to AWWA C111.
6. Valves with a stop or lug cast integrally or mechanically secured to the body for the purpose of limiting disc travel will not be acceptable.
7. See Standard Detail #15 for Restrained Line Valve Installation.

C. Design Data:

			Pressure (psi)		Flow (cfs)		
No.	Size	Class	Normal	Maximum Nonshock Shutoff	Normal	Extreme Maximum Opening	Extreme Maximum Closing

D. Materials and Construction:
1. Body shall be of cast iron for Class 25A through Class 150B valves and ductile iron for Class 250 valves.
2. Shafts shall be ASTM A276 Type 304 or 316 stainless steel for Class 25A through Class 150B valves and ASTM 564 Type 630 stainless steel for Class 250 valves. Design velocity for Class 250 valves shall be 16 fps.
3. Disc shall be cast or ductile iron for Class 25A through Class 150B valves and ductile iron for Class 250 valves.
4. Seats shall be synthetic rubber and be body mounted. Provide field replaceable and adjustable seat accessible from down pressure side of valve for sizes 30-inch and larger. Mating seat surface shall be stainless steel or Monel. Sprayed or plated mating surfaces are not acceptable.
5. Shaft seals shall be designed for use of standard self-adjusting split-V-type packing or standard O-ring seals. Pull-down packing is not acceptable.

E. Actuators:
1. Manual Actuators:
a. All valves shall open counterclockwise.
b. Provide indicators to show position of disc. Provide handwheels with raised cast arrow and word OPEN on rim oriented to specified opening direction.
c. Actuators shall be oil or grease-lubricated, totally-enclosed compound lever, traveling nut type to provide characterized closure. Actuator shall be self-locking at all variable opening positions.
d. Actuators shall be totally enclosed oil or grease-lubricated worm gear type with spur gear. Actuators shall have AWWA input stops. Gear ratio shall be a minimum of 72:1 for all valves. Actuator shall be self-locking at all variable opening positions.
e. Travel limiting stop nuts or collars installed in the actuating mechanisms shall be field adjustable and shall be locked in position by means of a removable roll pin, cotter pin, or other positive locking device. Clamps or setscrews are not acceptable.
f. Actuators and handwheels shall be located in positions indicated or as otherwise determined when manufacturer's drawings are submitted.
g. Furnish actuators with AWWA operating nuts for all buried installations unless otherwise scheduled.

h. Exposed buried actuator case, supports, and connection to the valve shall be cast iron.
i. Exposed, buried service actuator shafting, bolts, and fastening hardware shall be stainless steel.
j. Hand chains shall be cadmium plated.

2. Cylinder Actuators:
   a. Provide factory mounted positioners and other accessories as specified.
   b. Provide indicators to show position of disc.
   c. Valve actuator mechanism coupled to the cylinder shall be totally enclosed. The cylinder shall be attached rigidly to the actuator mechanism and shall not pivot or rotate during operation. The cylinder piston rod shall be chromium plated 316 stainless steel and shall be enclosed.
   d. Nonmetallic cylinders and accessories as manufactured by Chicago Fluid Power Corporation and Henry Pratt Company are acceptable as preferred alternatives to the AWWA standard metal cylinders.
3. Pneumatic Diaphragm Actuators:
   a. Provide indicator to show position of disc.
   b. Yoke shall be cast iron. Diaphragm case shall be cast iron or pressed steel with fabric inserted neoprene diaphragm.
   c. Provide adjusting screw for initial spring compression, and adjustable travel indicator.
   d. Provide handwheel for emergency operation.
   e. Products of the following manufacturers shall be acceptable:
      (1) DeZurik, a unit of General Signal Corporation.
      (2) Honeywell, Inc.
      (3) Engineer approved equal.
4. Electric Motor Actuators:
   a. Provide factory-mounted electric motor actuators conforming to AWWA C540.
   b. Provide indicator to show position of disc.
   c. Furnish complete with integral motor starter push button station and L/R selector switch
   d. Products of the following manufacturers shall be acceptable:
      (1) Auma Actuators, Inc.
      (2) Limitorque Corporation.
      (3) Rotork Controls, Incorporated.
      (4) Engineer approved equal.

F. Valve Controls:
1. Operate valve actuator to perform control function required.
   a. Open or close valve.
   b. Maintain metered flow rate.
   c. Pump stop-check service with functions indicated and specified.
   d. Refer to electrical control diagrams for valve control requirements.
2. Include all pilot valves, needle valves, strainers, interconnecting piping, fittings, positioners, solenoid valves, limit switches, and other accessories essential to valve function factory-assembled on valve body or actuator.
   a. Small control valves shall be bronze or brass; and piping shall be copper.
3. Equip actuators with heavy-duty, screw type terminal strip assemblies, designed to accept ring-tongue terminals for minimum size number 14 AWG wire.

G. Testing: Furnish certified copies of results of performance, leakage, and hydrostatic tests performed in compliance with Section 5, AWWA C504.

H. Valve Schedule:

No.	Size	Location	Installation	Body Type	Valve Ends	Shaft Position

I. Actuator Schedule:

No.	Size	Location	Actuator Type

J. Shop Painting: Paint exterior surface of valves in compliance with AWWA C504 for installation as noted. Apply interior coating conforming to AWWA C550 to exposed ferrous metal surfaces. Provide affidavit or certificate of compliance per AWWA C550.

2.06 ECCENTRIC PLUG VALVES:

A. Acceptable Manufacturers:
   1. DeZurik, a unit of General Signal Corporation.
   2. Henry Pratt Company.
   3. Milliken Valve Company, Inc.
   4. Clow Valve Company.
   5. Val-Matic Valve and Manufacturing Corporation.
   6. Engineer approved equal.

B. Design:
   1. Quarter-turn nonlubricated eccentric type with resilient faced plug. Valves with vane type seat rings are not acceptable. Shutoff up to scheduled rating with pressure in reverse direction where scheduled.
   2. Flanged valve ends shall be faced and drilled to conform to ANSI B16.1, Class 125 for thickness and drilling.
   3. Mechanical or push-on type rubber-gasketed joint ends shall conform to AWWA C111.
   4. Screwed ends shall be to the NPT standard. Grooved ends shall conform to AWWA C606 rigid joint specifications.
   5. Port areas for valves through 20-inch shall be at least 80% of full pipe area. Port areas of 24-inch and larger valves shall be at least 70% of full pipe area.
   6. Plugs shall be eccentric type with no backing ring or frame.
   7. Valve body cavity shall be smooth without protrusions or baffles.
   8. Power actuators shall conform to AWWA C540.

C. Materials and Construction:
   1. Bodies shall be of ASTM A126, Class B cast iron.
   2. Valve plug shall be ASTM A126, Class B cast iron or ASTM A536 ductile iron. Resilient plug facing or replaceable style body seats shall be synthetic rubber, neoprene, or Buna N compound suitable for use with water and wastewater applications.

3. Seat rings shall be threaded or welded of corrosion-resistant 18-8 stainless steel, nickel, or Monel conforming to AWWA C504. Sprayed or plated mating seat surfaces are not acceptable.
4. Bearings shall be replaceable. Sleeve type and thrust bearings in the upper and lower journals shall be corrosion-resistant stainless steel.
5. Shaft seals shall be multiple O-ring, self-adjusting U-cup or chevron type packing conforming to AWWA C504. Pull-down packing is not acceptable.
6. Shaft seals shall be field adjustable or replaceable without valve disassembly.
7. All exposed fastening hardware shall be zinc plated or stainless steel. Provide stainless steel for buried service.

D. Actuators:
   1. Manual Actuators:
      a. All valves shall open counterclockwise.
      b. Provide indicators to show position of plug.
      c. Nut operators shall be AWWA 2-inch size for operation by valve key.
      d. Worm gear actuators shall be totally enclosed, grease sealed, gear type furnished with AWWA nut, crank, handwheel, or chainwheel. All buried valves shall be provided with worm gear actuators, AWWA nut, and enclosed cover plate. All valves with reverse pressure capacity requirement shall be provided with worm gear actuators. Worm gear actuators shall be self-locking at all variable opening positions and sized to meet the torque ratings of AWWA C504. The shaft in a worm gear actuator shall have a nonmetallic or bronze sleeve type bearing. Submit manufacturer's parts and materials drawings.
      e. Handwheels shall be located in positions indicated or as otherwise determined when manufacturer's drawings are submitted.
   2. Cylinder Actuators:
      a. Cylinder and accessory materials shall conform to AWWA C507. Nonmetallic cylinders and accessories as manufactured by DeZurik, Henry Pratt Company, and Chicago Fluid Power Corporation are acceptable alternatives.
      b. Provide factory mounted for positioners and other accessories as specified.
   3. Provide indicators to show position of eccentric plug. Electric Motor Actuators:
      a. Provide factory-mounted electric motor actuators for open-close or throttling service to operate on 480-volt, 3-phase, 60-hertz, AC supply.
      b. An open-close actuator shall move plug from fully open to fully closed position, or reverse, in approximately 30 seconds. Modulating actuators shall have a similar rate of travel. Modulating actuators shall have hard wired communication via 4-20mA input signal and a 4-20mA output signal, internally powered. Provide indication to show position of plug for either open-close or modulating service.
      c. Furnish complete with integral motor starter, push button station, disconnect and L/R selector switch. Actuators specified for installation in hazardous environments shall not be provided with integral disconnect.
      d. Valve shall utilize limit switches for open/closed status.
      e. Actuator shall include a monitor relay for fault indications for lost phase, valve jammed and motor over temperature for a valve alarm input.
      f. Products of the following manufacturers shall be acceptable:
         (1) Auma Actuators, Inc.
         (2) Limitorque Corporation.
         (3) Rotork Controls, Incorporated.
         (4) EIM

(5) Engineer approved equal.

g. Provide the addition of a contact-less transmitter to give a 4-20mA analog signal corresponding to valve travel for remote indication when required.

h. Provide the addition of a current torque transmitter (CTT) to provide a 4-20mA analog signal corresponding to valve torque demand for remote indication when required.

E. Valve Controls:

1. Operate valve actuator to perform control function required.
2. Include all pilot valves, needle valves, strainers, interconnecting piping, fittings, positioners, solenoid valves, limit switches, and other accessories essential to valve function factory-assembled on valve body or operator.
3. Equip actuators with heavy-duty, screw type terminal strip assemblies, designed to accept ring tongue terminals for minimum size number 14 AWG wire.

F. Testing: Furnish certified copies of results of tests prior to shipment. All valves shall be subjected to an AWWA C504 procedure cycle life and pressure leak test at 150 psi and a body hydrostatic test at 300 psi. Valves shall be capable of providing drip-tight shutoff up to the full leak test rating. Certify reverse pressure capacity.

G. Valve Schedule:

No.	Size	Location	Installation	Body Type	Valve Ends	Shaft Position

H. Actuator Schedule:

No.	Size	Location	Actuator Type

I. Shop Painting: Apply interior coating conforming to AWWA C550 to exposed ferrous metal surfaces. Provide affidavit or certificate of compliance per AWWA C550.

2.07 CUSHIONED SWING CHECK VALVES:

A. Acceptable Manufacturers:

1. Dezurik-APCO
2. VAL-MATIC (Valve and Manufacturing Corporation).
3. Engineer approved equal

B. Operational Requirements:

1. Prevent reverse flow and cushioned to reduce shock or hammer.
2. Seat tightly with internal pipeline forces.
3. Cushioned with air cylinder controls in manner permitting adjustment of speed of closure.

C. Design: Conform to AWWA C508 and as specified.

1. Swing disc type with single shaft and flanged body. Flanges shall be ANSI B16.1, Class 125.
2. Cushion chamber(s) shall be mounted externally on valve body.
3. Valve disc shall have external lever and counterweight to initiate closure.
4. Suitable for 100 psi operating pressure.

D. Materials and Construction:
   1. Valve body shall be cast iron, ductile iron, or steel.
   2. Valve disc shall be cast iron, ductile iron, or stainless steel.
   3. Seats and seat ring shall be renewable. Seats shall be bronze or stainless steel. Seat rings shall be Buna-N or bronze.

2.08 STANDARD SWING CHECK VALVES:

A. Acceptable Manufacturers:
   1. Apco Willamette Valve and Primer Corporation.
   2. Val-Matic Valve & Manufacturing Corporation.
   3. Engineer approved equal.

B. Design:
   1. Conform to AWWA C508 and as specified.
   2. Iron body, bronze mounted, full opening.
   3. Extended stainless steel hinge pin with outside lever and weight.

C. Materials and Construction:
   1. Body and cover shall be cast iron. Flanges shall be ANSI B16.1, Class 125.
   2. Rubber faced discs or disc rings shall be Buna N for liquid applications and Viton for compressed air applications.

2.09 SILENT CHECK VALVES:

A. Acceptable Manufacturers:
   1. Apco Willamette Valve and Primer Corporation.
   2. GA Industries, Inc.
   3. Mueller Steam Specialty Company, Inc.
   4. Val-Matic Valve and Manufacturing Corporation.
   5. Engineer approved equal.

B. Design:
   1. Silent non-slam type with internal spring-loaded, single-piece disc.
   2. Body shall be of ductile iron or cast iron. Flanges shall be ANSI B16.1, Class 125.
   3. Valve seats assembly design shall be adequate to withstand design pressures without external backup flanges or other devices.

2.10 DOUBLE-DOOR WAFER CHECK VALVES:

A. Acceptable Manufacturers:
   1. Mueller Steam Specialty.
   2. Val-Matic Valve and Manufacturing Corporation.
   3. Valve and Primer Corporation.
   4. Engineer approved equal.

B. Operational Requirements:
   1. Internal spring on double-door hinge pin to prevent reverse flow with non-slam action.
   2. Seal tight from internal pipeline forces.

C. Design:
   1. Valve body shall be flat-faced wafer-type to fit between ANSI B16.1, Class 125 flanges.

D. Materials and Construction:
   1. Valve body shall be ductile iron or cast iron.
   2. Seats shall be Buna N for liquid applications and Viton for compressed air applications.
   3. Doors shall be directly attached to hinge pin.
   4. Hinge, spring, stop pin, and other internal trim shall be stainless steel.

5. Furnish 6-inch and larger valves with steel lifting eyebolt.

2.11 WAFER SWING CHECK VALVES:

A. Acceptable Manufacturers:
   1. Henry Pratt Company.
   2. KF Industries.
   3. Keystone Valve USA, Inc.
   4. Engineer approved equal.

B. Operational Requirements:
   1. Internal spring on single-door hinge pin to prevent reverse flow with non-slam action.
   2. Seal tight from internal pipeline forces.

C. Design:
   1. Valve body shall be flat-faced wafer type to fit between ANSI B16.1, Class 125 flanges.

D. Materials and Construction:
   1. Seat shall be Buna N for liquid applications and Viton for compressed air applications.
   2. Door, hinge, spring, and other internal trim shall be stainless steel.
   3. Furnish 6-inch and larger valves with steel lifting eyebolt.

2.12 BALL CHECK VALVES:

A. Acceptable Manufacturers:
   1. Flomatic Valve Division, the Danfoss Group, Type 408.
   2. Flygt Corporation, Type HDL.
   3. Engineer approved equal.

B. Design:
   1. Clog-proof design with ball check for viscous liquids or solids applications.
   2. Seal tight from internal pipeline forces.

C. Materials and Construction:
   1. Flanged iron body with internal rubber-covered metal ball. Flanges shall be ANSI B16.1, Class 125.
   2. Top cover to provide access to inside of valve without removal of the valve from the line.
   3. Ball shall be of sufficient weight to sink in liquid under a non-flow condition.

2.13 BALL VALVES:

A. Acceptable Manufacturers:
   1. Apco Willamette Valve and Primer Corporation.
   2. Henry Pratt Company.
   3. Engineer approved equal.

B. Design: Conform to AWWA C507, AWWA C540 and as specified.
   1. Valves shall consist of essentially three main parts:
      a. Body with full unrestricted circular inlet and outlet with diameter equal to rated size of valve.
      b. A moveable plug having a full, unobstructed circular waterway opening equal to valve body opening.
      c. A totally enclosed operating mechanism mounted on and attached to valve body.
   2. Seats shall consist of flexible metal on the ball or resilient rubber on the body and rigid stainless-steel seats opposite and located on both ends of valve.
   3. Shaft seals shall be self-adjusting split-V-type or rubber O-ring type designed for replacement under line pressure.
   4. Valve body shall have flanged ends. Flanges shall be ANSI B16.1, Class 125.

C. Valve Operating Mechanism:
   1. Valve shall be equipped with a traveling cross-head type operator and shall operate plug by means of a cross-head linked to a rotator lever.
   2. Rotator lever shall impart rotary motion to plug shaft.
   3. Provide an indicator to show position of plug with respect to body opening.

D. Actuators:
   1. Manual Actuators:
      a. Valve shall open counterclockwise.
      b. Provide non-rising stem mechanism self-locking in all positions.
      c. Provide gear actuator as required to limit maximum operating torque at pressure differential equal to working pressure specified.
         (1) Totally enclose all gearing.
         (2) Attach operating nut or handwheel with shear pins designed to protect mechanism from excessive torque.
   2. Cylinder Actuators:
      a. Provide factory mounting for positioners, solenoid valves and other accessories as required.
      b. Provide indicators to show position of ball.
      c. Cylinders shall be double-acting and designed to prevent drifting throughout stroke. Materials shall conform to AWWA C507. Nonmetallic cylinders and accessories as manufactured by Chicago Fluid Power Corporation and Henry Pratt Company are acceptable alternatives.
   3. Air/Oil cylinder Actuators:
      a. Provide factory-mounted, air-operated oil-opposed cylinders for open-close service.
      b. Cylinder shall be capable of operating valve under all conditions when supply air pressure varies from 60 to 100 psi.
      c. Provide factory-mounted limit switches, solenoid valves, and other accessories as required.
      d. Provide indicators to show position of ball.
      e. Cylinder shall be double-acting and designed to prevent drifting throughout stroke. Air and oil cylinders shall be the same diameter. Materials shall confirm to AWWA C507. Nonmetallic cylinders and accessories as manufactured by Chicago Fluid Power Corporation and Henry Pratt Company are acceptable alternatives.
      f. Provide translucent oil reservoir with a minimum capacity of 16 ounces for oil cylinder.
   4. Electric Motor Actuators:
      a. Actuator shall move plug from fully open to fully closed position or the reverse in not less than 120 seconds at normal speed.
      b. Furnish auxiliary handwheel for manual operation.
      c. Furnish complete with integral motor starter (push button station and L/R selector switch).
      d. Products of the following manufacturers shall be acceptable:
         (1) Auma Actuators, Inc.
         (2) Limitorque Corporation.
         (3) Rotork Controls, Incorporated.
         (4) Engineer approved equal.

E. Valve Controls:
   1. Operate valve actuator to perform control function required.
      a. Open or close valve.

b. Maintain metered flow rate.
c. Pump stop-check service with functions indicated and specified:
d. Refer to electrical control diagram for valve control requirements.

2. Include all pilot valves, needle valves, strainers, interconnecting piping, fittings, positioners, solenoid valves, limit switches, and other accessories essential to valve function factory assembled on valve body or operator.
   a. Small control valves shall be bronze or brass; piping shall be copper.
3. Equip actuators with heavy-duty, screw type terminal strip assemblies, designed to accept ring tongue terminals for minimum size number 14 AWG wire.

F. Testing: Furnish certified copies of results of tests performed in compliance with Section 13, AWWA C507.

G. Shop Painting: Apply interior epoxy coating conforming to AWWA C550 and NSF to exposed ferrous metal surfaces. Provide affidavit or certificate of compliance per AWWA C550 and NSF.

2.14 CONE VALVES:

A. Acceptable Manufacturers:
1. Apco Willamette Valve and Primer Corporation.
2. Henry Pratt Company.
3. Rodney Hunt Company.
4. Engineer approved equal.

B. Design:
1. Valve shall consist essentially of three main parts:
   a. Body with full unrestricted circular inlet and outlet with diameter equal to rated size of valve.
   b. A movable conical plug having a full unobstructed circular waterway opening equal to valve body opening.
   c. A totally enclosed operating mechanism mounted on and attached to the valve body.
2. Valve shall have monel seats fused to body around inlet and outlet bore. Plug shall be provided with two pair of monel seat rings fused into plug material; one pair to mate with body seats in open position. Seats shall be externally adjustable.
3. Valve body shall have flanged ends. Flanges shall be ANSI B16.1, Class 125.
   a. Pump side - ANSI B16.1, Class 125.
   b. System side - ANSI B16.1, Class 125.
4. Power actuators shall conform to AWWA C540.

C. Materials and Construction:
1. Furnish valve complete with operating mechanism and accessories suitable for accomplishing specified operation.

D. Valve Operating Mechanism:
1. Operating mechanism shall be a self-contained unit readily removable from valve body.
2. Operation of valve shall employ an axial motion to lift plug from seat, a rotary motion to open plug, and an axial motion to resist plug.
3. Mechanism shall consist of a lifter lever to perform seating and unseating, a rotation lever attached to plug shaft, and a linkage to connect these to a cross-head operating on guide rods.
4. Provide an indicator showing position of plug with respect to body opening.

E. Actuator:
1. Manual Actuators:

a. Valve shall open counterclockwise.
b. Provide non-rising stem mechanism self-locking in all positions.
c. Provide gear actuator as required to limit maximum operating torque to 60 foot-pounds at pressure differential equal to working pressure specified.
(1) Totally enclose all gearing.
(2) Attach operating nut or handwheel with shear pins designed to protect mechanism from excessive torque.

2. Cylinder Actuators:
a. Provide mounting provisions for positioners, solenoid valves, and other accessories as required.
b. Provide indicators to show position of plug.
c. Cylinders shall be double-acting and designed to prevent drifting throughout stroke. Materials shall conform to AWWA C507. Nonmetallic cylinders and accessories as manufactured by Chicago Fluid Power Corporation and Henry Pratt Company are acceptable alternatives.

3. Air/Oil Cylinder Actuators:
a. Provide factory-mounted, air-operated oil-opposed cylinders for open-close service.
b. Cylinder shall be capable of operating valve under all conditions when supply air pressure varies from 60 to 100 psi.
c. Provide factory-mounted limit switches, solenoid valves, and other accessories as required.
d. Provide indicators to show position of ball.
e. Cylinder shall be double-acting and designed to prevent drifting throughout stroke. Air and oil cylinders shall be the same diameter. Materials shall confirm to AWWA C507. Nonmetallic cylinders and accessories as manufactured by Chicago Fluid Power Corporation and Henry Pratt Company are acceptable alternatives.
f. Provide translucent oil reservoir with a minimum capacity of 16 ounces for oil cylinder.

4. Electric Motor Actuators:
a. Furnish auxiliary handwheel for manual operation.
b. Products of the following manufacturers shall be acceptable:
(1) Auma Actuators, Inc.
(2) Limitorque Corporation.
(3) Rotork Controls, Incorporated.
(4) Engineer approved equal.

F. Valve Controls:
1. Operate valve actuator to perform control function required.
a. Open or close valve.
b. Maintain metered flow rate.
c. Pump stop-check service with functions indicated and specified.
d. Refer to electrical diagrams for valve control requirements.

2. Include all pilot valves, needle valves, strainers, interconnecting piping, fittings, positioners, solenoid valves, limit switches, and other accessories essential to valve function factory assembled on valve body or actuator.
a. Small control valves shall be bronze or brass; piping shall be copper.

3. Equip actuators with heavy-duty, screw type terminal strip assemblies, designed to accept ring tongue terminals for minimum size number 14 AWG wire.

G. Testing:

1. Factory operate valves a minimum of three times from the fully open to closed position under no-flow conditions to demonstrate that the operating mechanism and plug are not binding or vibrating during any position of travel.
2. Perform hydrostatic tests on valves with plug in partially open position and test heads bolted to each waterway flange. Apply 400-psi internal water pressure for 60 minutes with no evidence of structural failure, seeps, or leakage at any point.
3. Perform leakage tests on valves with plug in closed position and one waterway test flange removed. Apply 200-psi water pressure between test flange and plug for 60 minutes with no evidence of seeps or leakage through valve. Reverse test flange and repeat test from opposite side.
4. Furnish certified copies of the reports covering these tests.

H. Shop Painting: Apply interior coating conforming to AWWA C550 to exposed ferrous metal surfaces. Provide affidavit or certificate of compliance per AWWA C550.

2.15 AUTOMATIC PISTON (DIAPHRAGM) VALVES:

A. Acceptable Manufacturers:
1. Cla-Val Company.
2. GA Industries, Inc.
3. Ross Valve Manufacturing Company.
4. Singer Valve.
5. Watts Automatic Control Valve Company.
6. Engineer approved equal.

B. Operational Requirements:
1. Cushioned to permit operation without causing shock or water hammer.
2. Operate without continuous waste of water.
3. Provide tight closure when shut and full pipe line opening when open.

C. Design:
1. Valves shall be of flanged globe or angle body pattern.
2. Inlet flange or pump side flange shall be ANSI B16.1, Class 125 outlet flange or system side flange) shall be ANSI B16.1, Class 125.
3. Valves shall be external pilot actuated.
4. Provide indicator rod to show position of opening of the piston or diaphragm.
5. Such that internal main valve assembly can be dismantled without removing valve body from pipeline.
6. Provide shutoff cocks and Y-strainers on control tubing.

D. Materials and Construction:
1. Body shall be cast iron, ductile iron, or stainless steel.
2. Trim shall be bronze or stainless steel.
3. Seats shall be leather or other resilient material and shall be replaceable.

E. Valve Controls:
1. Control Function:
   a. Pressure regulation - maintain preadjusted downstream pressure for varying rates of flow and upstream pressure.
   b. Back pressure regulation and check valve - maintain preadjusted upstream pressure for varying rates of flow and prevent reverse flow if upstream pressure drops below that downstream.
   c. Pump stop-check - open when pump reaches preset discharge pressure, close with normal pump shut down, close in event of power loss, capable of manual control.
   d. Open when line pressure exceeds preset value.

e. Open at abnormal or subnormal pressure to prevent any surge.
f. Open upon pump failure or emergency stop to prevent any surge.
g. Flow regulation - maintain preadjusted downstream flow for varying rates of upstream and downstream pressures. Valve pilot control to be actuated by the differential pressure produced across an integral or separate orifice plate.

2. Include all pilot valves, needle valves, strainers, interconnecting piping, fittings, cylinders, positioners, solenoid valves, limit switches, and other accessories essential to valve function factory assembled on valve body.
   a. Small control valves shall be bronze or brass; piping shall be copper.
   b. Provide orifice plate assembly for flow control function.

F. Testing:
1. Factory test valves at a hydrostatic pressure of not less than 300 psi and check leakage across the valves at a pressure of not less than 150 psi.
2. Submit copies of all test results.

G. Valve Schedule:

2.16 ALTITUDE VALVE:

A. Acceptable Manufacturers:
1. Cla-Val Company.
2. GA Industries, Inc.
3. Ross Valve Manufacturing Company.
4. Singer Valve.
5. Watts Automatic Control Valve Company.
6. Engineer approved equal.

B. Design:
1. Internal components shall be designed such that there are no metal- to-metal contacts.
2. Valve shall be designed to prevent water hammer and include needle valve for adjusting closing speed.
3. Closure shall be regulated by a 3-way pilot valve.
4. Valve shall provide indicator to show degree of opening at all times.

C. Valve Controls:
1. Include all pilot valves, needle valves, strainers, interconnecting piping, fittings, cylinders, positioners, solenoid valves, limit switches, and other accessories essential to valve function factory assembled on valve body.
   a. Small control valves shall be bronze or brass; piping shall be copper.

D. Testing:
1. Factory test valves at a hydrostatic pressure of not less than 300 psi and check leakage across the valves at a pressure of not less than 150 psi. Set valves to operate at the pressures specified previously.
2. Submit copies of all test results.

2.17 AIR VALVES:

A. Acceptable Manufacturers:
1. Apco Williamette Valve and Primer Corporation.
2. Crispin Valves, Multiplex Manufacturing Company.
3. GA Industries, Inc.
4. Val-Matic Valve and Manufacturing Corporation.
5. Engineer approved equal.

B. Design: Conform to AWWA C512 and as specified.

1. Valve shall be heavy-duty combination air release style.
2. Body and cover shall be cast or ductile iron.
3. Float shall be stainless steel.
4. All internal parts shall be stainless steel.

C. Operation:
1. Release air when filling line.
2. Admit air when emptying line.
3. Release accumulated air while pipeline is full and operating under pressure.

D. Connection:
1. Connect air valves 2 inches and smaller to pipeline through corporation stops.
2. Connect air valves 3 inches and larger through tapped bosses or flanged outlets.
3. Connecting fittings and pipe shall be bronze, brass, or copper rated for 150 psi service.
4. Isolation valves shall be provided for all air valves and shall be bronze gate valves, Crane No. 424 or Engineer-approved equal for sizes 3 inches and smaller unless otherwise noted. Isolation valves 4 inches and larger shall be flanged AWWA C504 butterfly valves.
5. Couplings or unions indicated between pipeline and air valve piping shall be insulated style.
6. See Standard Detail #1 for Air Release Valve Manhole Detail.

E. Valve Schedule:

2.18 AIR/VACUUM VALVES:

A. Acceptable Manufacturers:
1. Apco Willamette Valve and Primer Corporation.
2. Crispin Valves, Multiplex Manufacturing Company.
3. G.A. Industries, Inc.
4. Val-Matic Valve and Manufacturing
5. A.R.I. USA, Inc.
6. Engineer approved equal.

B. Materials:
1. The valve body and cover shall be constructed for ASTM A126 Class B cast iron. The orifice, float and linkage mechanism shall be constructed of Type 316 stainless steel. Connecting parts in the pit or manhole shall be of Type 316 Stainless steel. Non-metallic floats or linkage mechanisms are not acceptable. The orifice button shall be Buna-N.
2. Materials specified are considered the minimum acceptable for the purposes of durability, strength, and resistance to erosion and corrosion. The CONTRACTOR may propose alternative materials for the purpose of providing greater strength or to meet required stress limitations. However, alternative materials must provide at least the same qualities as those specified for the purpose.

C. Equipment:
1. Each air valve shall be furnished and shall consist of an inlet shut-off valve. Accessory valves shall be quarter-turn, full ported bronze ball valves. The well service air valves shall be furnished with throttling valves mounded on the top of the main valve to control the rate of air release.
2. Optional body materials include ASTM A536 Grade 65-45-12 ductile iron, ASTM A351 Grade CF8M stainless steel, and ASTM B584 Alloy C83600 cast bronze. Valve interiors and exteriors shall be coated with an NSF/ANSI 61 certified fusion bonded epoxy in accordance with AWWA C550 when specified.

D. Coatings:

1. Each valve body interior surface shall be coated using fusion bonded epoxy coating system.
2. Connect air valves 3 inches and larger through tapped bosses or flanged outlets.
3. Connecting fittings and pipe shall be bronze, brass, or copper rated for 150 psi service.
4. Isolation valves shall be provided for all pump air/vacuum valves and shall be bronze gate valve, Crane No. 424 or Engineer-approved equal for sizes 3 inches and smaller unless otherwise noted. Isolation valves 4 inches and larger shall be flanged AWWA C504 butterfly valves.
5. Couplings or unions indicated between pipeline and air valve piping shall be insulated style.

2.19 FIRE HYDRANTS:

A. Acceptable Manufacturers:
   1. Clow Valve Company.
   2. Mueller Company, model Centurion.
   3. WaterMaster 5CD250, EJ Group
   4. Engineer approved equal.

B. Design:
   1. Conform to AWWA C502 and as specified.
   2. Provide compression type main valve designed to open against pressure. Valve facings shall be of nontoxic materials suitable for potable water service.
   3. Provide internal main valve seat opening of not less than 5 inches diameter.
   4. Design to open counterclockwise.
   5. Provide dry-type bonnet with lubricant reservoir protected by O- or Quad-ring seals.
   6. Provide mechanical joint bell on shoe.
   7. Furnish for minimum bury depth of 4 feet. Include extensions as required for blow-offs.
   8. Furnish with two 2-1/2-inch hose nozzles and one 4-1/2-inch pumper nozzle with NFPA 1963 standard threads. Nozzle caps shall be chained to hydrant.
   9. Provide traffic break-off joint located above and near ground surface designed to minimize accident repairs.
   10. See Standard Detail #5 for Fire Hydrant with Isolation Valve Detail.
   11. See Standard Detail #6 for Fire Hydrant with Isolation Valve for Deep Mains Detail.

C. Shop Painting:
   1. Shop paint exterior of hydrants safety yellow.
   2. Interior Coating:
      a. Conform to AWWA C550.
      b. Apply to exposed interior ferrous metal surfaces.

2.20 CORPORATION STOPS:

A. Provide corporation stops as specified to isolate air valves or as manual air release or inlet valves.

B. Mueller Company Style H-10003, H-10013, or H-10045 or Engineer-approved equal as applicable.

2.21 FLOOR STANDS:

A. Provide cast-iron floor stands where indicated.
   1. Base shall be suitable for bolting to supporting structure.
   2. Equip with bronze shaft bearing.
   3. Equip with an indicating device.

B. Provide extension shafts where required.

1. Include bronze-bushed, cast-iron shaft guides adjustable in two directions.

2.22 VALVE BOXES:

A. Acceptable Manufacturers:
   1. Clay and Bailey Manufacturing Company.
   2. Dresser Industries, Inc.
   3. Mueller Company.
   4. Neenah Foundry Company.
   5. Tyler Company.
   6. Engineer approved equal.

B. Provide for all buried valves.
   1. Provide extension stem to bring operating nut within 2 feet of valve box top.
   2. Drop cover shall be marked "WATER" or "SEWER" for the appropriate system.

C. Prepare surfaces and paint or coat all valves, fire hydrants, floor stands, valve boxes, corporation stops, and all related accessories standard of the manufacturer unless otherwise specified herein.

D. Paint and coatings shall be suitable for the service intended.

E. Submit type of paint or coating proposed with drawings and data for Engineer approval prior to fabrication.

PART 3 - EXECUTION

3.01 INSTALLATION:

A. Comply with provisions of AWWA C600 and as specified.

B. Thoroughly clean and remove all shipping materials prior to setting. Operate all valves from fully opened to totally closed.

C. Install eccentric plug valves in reverse position, flow and pressure against the plug face when closed, in lines with solids or stringy materials. When installed horizontally with shaft in the horizontal, the plug shall rotate open to the top recess of the valve body.

D. Install double-door wafer check valves with hinge pin in the vertical position for horizontal flow applications.

E. Install single-door wafer swing check valves with hinge pin in the horizontal position for horizontal flow applications.

F. Equip with anchorage where indicated.

G. Set fire hydrants with lowest nozzle 18 inches above finished grade. Check and fill stem bonnet lubricant reservoir.

3.02 FIELD TESTING:

A. Perform on piping and valves for the following:
   1. Gate valves.
   2. Butterfly valves.
   3. Eccentric plug valves.
   4. Check valves.
   5. Ball valves.
   6. Cone valves.
   7. Automatic piston valves.
   8. Altitude valves.
   9. Air and air/vacuum valves.
   10. Fire hydrants.

B. Automatic Piston Valves, Altitude Valves, and Non-manual Valves:
   1. Furnish services of manufacturer's engineer to perform field tests to determine that the valve will operate as specified and to make any adjustments required to improve operation of the valves.
   2. Furnish all instruments required to record pressure during tests when any combination of high-service pumps are started or stopped to simulate possible occurrences under actual operating conditions. Instruments will remain property of the manufacturer.
   3. Field tests shall be witnessed by Engineer.

END OF SECTION 331216

This page was intentionally left blank.

SECTION 331223 – SUBMERSIBLE LIFT STATION

PART 1 - GENERAL

1.01 RELATED DOCUMENTS:

A. Drawings and general provisions of the Contract, including General and Supplementary Conditions and DIVISION 01 Specification Sections, apply to this Section.

1.02 SUMMARY:

A. Provide all labor, equipment, and materials as required to construct and place into operation submersible pump lift stations as specified herein.

B. Related Work Specified Elsewhere:

1. Section 312050 – Site Preparation and Earthwork.
2. Section 331100 – Pressure Pipe.
3. Section 331216 – Utility Valves and Accessories.
4. Section 333900 – Utility Structures.

1.03 REFERENCE STANDARDS:

A. Lift station shall be in conformance with the applicable provisions of the following standards which establish the minimum level of quality required. Exceptions to the following standards have been made throughout these Specifications. When an exception to a standard is specified, the Specifications shall govern.

B. Applicable Standards:

1. American Society for Testing and Materials (ASTM).
2. American National Standard Institute (ANSI).
3. American Society of Mechanical Engineers (ASME).
4. National Electrical Code (NEC).
5. National Electrical Manufacturers' Association (NEMA).
6. American Bearing Manufacturer's Association (ABMA).
7. American Welding Society (AWS).
8. American Water Works Association (AWWA).
9. Standards of the Hydraulic Institute (HI).
10. Society for Protective Coatings (SSPC).

1.04 SUBMITTALS:

A. Submit as specified in DIVISION 01.

B. Submittals shall include, but are not limited to, the following:

1. Complete dimensional drawing of pump and control panel.
2. Detailed cross-section of pump, seals, and motor indicating materials of construction.
3. Performance curves for each pump. Curves shall cover range from shutoff to at least 150% of design flow rate at the conditions specified, and shall be submitted for the following parameters as a function of capacity at design temperature:
   a. Total dynamic head.
   b. Efficiency.
   c. Required brake horsepower.
4. Provide the rated motor horsepower.
5. Detailed layout drawing of control panel. Show all terminal blocks.
6. Product data on all electrical and control components defining functional requirements and construction.
7. Complete installation, operating, and maintenance instruction books.
8. Certificates of completion of factory tests.

9. Three (3) hard copy sets of O & M Manuals.

1.05 QUALITY ASSURANCE:

A. Acceptable Manufacturers:
   1. Flygt Corporation.
   2. Gorman-Rupp Company.
   3. Ebara Pumps
   4. Engineer-approved equal.

B. Factory Tests and Reports:
   1. Include all manufacturer's standard factory tests on equipment and materials.
   2. All pumps shall be tested as follows:
      a. For dynamic and static balance.
      b. For normal functioning in conformance with the "Standards of the Hydraulic Institute."

1.06 DELIVERY, STORAGE, AND HANDLING:

A. Delivery, storage, and handling shall conform to the following requirements:
   1. After completion of factory tests, ready pumps for operation such that no field disassembly, cleaning, or flushing is required. The pumps will not be flushed in the field prior to start-up.
   2. Ship equipment as completely assembled as possible.
   3. Tag each individual item of equipment with the pump designation indicated on the Drawings.
   4. Flanged connections shall be sealed with 1/2-inch thick plywood covers bolted to the flange with not less than four bolts.
   5. Crate electrical and control equipment to prevent damage during shipment and on-site storage.
   6. Any components removed for shipment shall be match-marked prior to removal.

PART 2 - PRODUCTS

2.01 GENERAL:

A. More than one pump is required for any flows over 1,500 gallons per day.
B. Lift station shall include two or more electrically driven submersible pumps, pump mounting plates with discharge, elbows, pump rail guides and rail guide supports, access frame with cover, pump lifting chain with hooks, wiring channel, NEMA 4 weatherproof control box with valves, and reinforced concrete sump basin.
C. Fencing is required.
D. Pump stations must be accessible by authorized personnel from a public right-of-way at all times.
E. Pump stations shall be at least fifty feet (50’) in a horizontal direction from any existing or proposed public water supply well or other water supply sources or structures.
F. Flood protection will be required for facilities within the 100-year floodplain. Protections shall include structures, electrical equipment, and mechanical equipment.
G. Design Requirements will be determined by the Engineer of Record. The following requirements at a minimum shall be established for each pump and provided to the City for review and approval prior to ordering of any equipment. The City will review all submittals in a timely manner.

SECTION 331223 – SUBMERSIBLE LIFT STATION: continued

2.02 PUMPS:

A. Pumps shall be totally sealed submersible electrically operated pumps capable of handling screened sewage and miscellaneous plant drains containing solids.

B. Performance Requirements:
   1. Capacity (gpm): [_____].
   2. Total Dynamic Head (ft.): [_____].
   3. Maximum Speed (rpm): [1,750] [3,600].
   4. Maximum Solid: 3 inches.
   5. Brake horsepower of motors furnished shall not be exceeded at any point on the head capacity performance curves.

C. Materials and Construction:
   1. Motor housing and pump casing shall be constructed of cast iron.
   2. Impeller:
      a. Nonclog, open type.
      b. Impeller shall be ceramic coated (if available) iron construction. If not available, bronze or nylon-coated is acceptable.
      c. Hydraulically and dynamically balanced.
      d. Impeller shall be keyed to shaft by a self-locking device, not screwed or pinned to the motor pump shaft.
   3. Cutter assembly: Shall be stainless steel.
   4. Shaft:
      a. Constructed of 303 stainless steel.
      b. Shall be of sufficient size to handle vibratory forces that occur when impeller passes solids.
   5. All required bearings shall be designed for a bearing life of 5 years minimum.
   6. All external fasteners shall be of 18-8 stainless steel.
   7. The pump discharge shall be fitted with either a diaphragm-type sealing flange or a machined metal-to-metal type sealing flange.
      a. Flange shall be connected to the discharge piping and anchored to the floor of the sump.
      b. Flange shall be designed to receive the pump connection without need of bolts or accessing the sump.
   8. Pump and motor assembly, including discharge elbow, shall be coated with two 8-mil dry film thickness coats of coal-tar epoxy.
   9. Additional nameplates shall come with each pump. The nameplates shall be identical to the ones that are attached to the pumps.
   10. Each pump shall be identified with metal nameplate including:
      a. Manufacturer.
      b. Type of unit and model number.
      c. Serial number.
      d. Rated capacity, discharge head, horsepower, voltage, and other pertinent information.

2.03 PUMP BASINS AND ACCESSORIES:

A. Concrete Basin:
   1. Each basin shall contain all pumps and other equipment as specified.
   2. The wet well basin shall be designed with an emergency storage capacity of2 hours of retention at peak hourly flow.
   3. Gas-tight construction shall be required.
   4. Covered wet wells must have provisions for air displacement to the atmosphere.

An inverted and screened "J" tube or other means may be used.

B. Pump Mounting Bases and Discharge Piping:
   1. Pipe shall be Schedule 80, ASTM A53, Grade B electric-resistant welded carbon steel or Class 53 cement mortar lined ductile iron.
   2. Separate mounting assemblies shall be furnished for each pump. Mounting assemblies shall include specially designed discharge elbow. Discharge elbow shall have a mounting shoe designed to be anchored to sump floor and support the pump assembly. Discharge elbow shall have a sliding quick disconnect flange designed to provide a bubble tight seal to the pump discharge without the need to access the connection allowing pump removal by vertically raising pump from the top of the sump. Discharge elbow shall discharge vertically and have a discharge flange designed to connect to an ANSI 150-pound flanged discharge pipe.
   3. Provide all necessary nuts, bolts, and gaskets required for making up flanged connections.
   4. Guide rail assembly shall be adjustable and run from the mounting assembly on the sump floor to the access door on the top of the sump. It shall be designed to support and guide the pump allowing removal of pump without entering the sump. Provide with all required hardware to firmly attach pump to rail assembly and rail assembly to concrete sump. Rail guides shall be fastened to pump so that all lifting loads will be applied to guide supports and not to the pump or motor housing. A lifting chain and hook shall be provided for each pump.
   5. Materials of construction.
      a. Guide rail and slide assembly: Stainless steel minimum of schedule 20 2-inch pipe. Over 50 Hp, the guide rails shall be a minimum of 3-inch schedule 40 stainless steel pipe. At no time shall these specifications override the actual size of the guide rails required to support the pumps and the installation / removal of the pumps.
      b. Mounting shoe, plates, and hardware: Cast iron on carbon steel.
      c. Any hardware used in the wet well used for mounting of the guide rails or anything else that is above normal wet well level shall be of stainless steel.
   6. Coat all non-stainless-steel pump mounting plates, guide rails, discharge piping, mounting hardware, valves, and related items with at least two 8-mil dry film thickness coats of coal-tar epoxy.

C. Valves: Furnish discharge gate and check valve. Locate gate valve operator so it can be operated by opening the access door and without entering the sump.
   1. Valves shall be located in a separate valve chamber.
   2. The valve chamber shall have a minimum access hatch of 24 inches by 36 inches.
   3. Dry wells, including their superstructure, shall be completely separated from the wet well with gas tight common walls.

D. Access Frame and Door:
   1. Provide separate access for each pump.
   2. Constructed of steel or aluminum.
   3. Frame shall have attached upper guide rail brackets, chain hook and level sensor wiring channel.
   4. Cover shall be provided with lifting handle and safety latch to hold cover in the open position.
   5. Steel portions of access frame and door assembly shall be coated inside and outside with coal-tar epoxy coating.

2.04 EMERGENCY POWER AND CONNECTIONS:

A. All lift stations shall have for backup power supply, generators sufficiently sized to operate all the pumps in the station running at the same time, with power in reserve. Depending upon the

size of the generator required and the location, they shall be fueled by natural gas if within 200 feet proximity to a natural gas. Otherwise, the generator shall be fueled by diesel as approved by the City.

B. Emergency pump connections shall be installed.

2.05 CONTROLS:

A. The Engineer shall submit the items following as part of the design for City approval.

B. Operating Conditions:
   1. Depth of lift stations: As indicated.
   2. Fluids: As specified this Section.
   3. Control voltage: 120Vac, 60 hertz.

C. Elevation and Function:
   1. [_____] - Start lag pump.
   2. [_____] - Start lead pump.
   3. [_____] - Stop all pumps.
   4. [_____] - Low level cutoff switch.

D. Level Sensors:
   1. Magnetrol T10, Roto Float or approved equal.
   2. Provide a weight attached to cord above float switches to hold switches in place in sump.
   3. Design float switches to hang from wiring channel.
   4. Provide one wiring channel with bolting type mounting brackets to accommodate level sensors and pump motor leads as defined above.
   5. Provide terminal blocks in the control panel for terminating all level sensors.
   6. Provide 20 feet of type 50 W-A, UL-listed hard service cord for each level sensor. Cord shall be attached and sealed at the level sensor.

E. Wiring Channel:
   1. Wiring channel shall provide cord grip holders for the pump cords and the float switch cords.
   2. There shall be easy adjustment of float switch cords to permit level setpoint changes. All cords must be continuous without splices from control panel to pumps and float switches.
   3. Wiring channel shall mount on supports fastened to access frame.

2.06 ELECTRICAL EQUIPMENT:

A. Electric Motors:
   1. Design Details:
      a. General Design:
         (1) Rated 460V, 3 phase, 60 hertz.
         (2) Service factor of 1.15.
         (3) Motors shall be of submersible design and capable of operating totally submerged in liquid.
         (4) Designed for Class 1, Groups C and D, Division 1 hazardous location as defined by the National Electrical Code.
         (5) Motors shall be listed with Underwriters Laboratories as Class 1, Groups C and D, Division 1, explosion proof.
         (6) Insulation shall be Class B or Class F, with Class B temperature rise in accordance with NEMA MG-1-12-42.
         (7) Motors shall be designed for full-voltage starting.
         (8) All motors shall have squirrel-cage rotors.
         (9) Motor shall be designed to operate continuously with only 2/3 of the motor submerged for cooling.
         (10) The nameplate horsepower rating of each motor at 1 service factor shall equal

or exceed the horsepower required to drive the pump at 120% of the design conditions specified and within normal operating ranges. For each motor furnished, the nameplate horsepower rating multiplied by the service factor shall equal or exceed the horsepower required to drive the pump under any condition the pump is capable of operating.

b. Enclosure:
   (1) Motor shall be housed in an air-filled cast-iron, watertight enclosure.
   (2) Enclosure shall be sealed by use of O-rings and shall have rabbet joints with large overlap.
   (3) Cable leads through enclosure shall be epoxy sealed with Buna-N grommets.
   (4) Lifting eyes shall be cast into the motor enclosure and be of sufficient strength to lift the entire pump-motor unit.
c. Shaft: Shall be vertical, solid, two-piece construction.
d. Bearings:
   (1) Bearings shall be prelubricated at the factory and designed for an ABMA L-10 rating life of not less than 40,000 hours at rated speed.
   (2) Shaft extension bearings shall be locked to prevent axial shaft movement and to withstand high thrust loads.
e. Mechanical Seals:
   (1) Tandem mechanical seals with oil chamber between seals shall be used to provide increased protection from moisture contamination of electrical components.
   (2) Upper seals shall be carbon/silicon carbide.
   (3) Lower seal faces shall be tungsten carbide/silicon carbide.
   (4) Metal parts shall be 302 stainless steel.
   (5) A watertight seal and separate strain relief shall be provided for all pump electrical flexible cables.
f. Lead Cables:
   (1) Power and control cables shall be Type SOW-A, UL-listed hard service cord.
   (2) Cables shall be covered by a neoprene jacket.
   (3) Furnish a minimum 30-foot length per pump.
g. Moisture Protection:
   (1) Provide two moisture-sensing probes in the oil-filled chamber between the mechanical seals to detect the influx of any conductive fluid past the outer seal.
   (2) Probes to provide sufficiently early warning of outer seal failure to fully protect all electrical components.
   (3) Wire probes to control panel common trouble alarm to annunciate moisture detection.
h. Thermal Protection:
   (1) Install thermostats in adjacent phases of the motor winding to provide thermal overload protection.
   (2) Thermostats shall be of the automatic reset, normally closed type.
   (3) Thermostats shall be wired into the motor control circuit at the control panel.

B. Electrical Control Panels:
   1. Control equipment shall be mounted in a dead front NEMA 4R enclosure supplied with separate removable inside panel to protect electrical equipment.
   2. Lock hasp shall be provided on the outside door.
   3. Stand shall be provided to mount panel on top of basin.
   4. Circuit breakers shall be provided for each pump.

5. Provide ground fault equipment protection for each pump.
6. Magnetic, full-voltage, nonreversing motor starters with three thermal overload relays (one per phase) suitable for 460V, 3-phase, 60-hertz operation shall be provided. Starters shall have auxiliary contacts to operate both pumps on override condition.
7. An interlock relay shall be provided to automatically reconnect the control circuit in case of circuit breaker trip on one pump.
8. Provide a common dry contact to alarm on failure of pumps to start on level control actuation.
9. Terminal strip shall be provided for connecting pump and control wires with additional terminals provided for alarm.
10. Include 115V transformer for equipment control.
11. Include 110V power receptacle inside any control panels located outdoors.
12. Provide ground fault circuit interruption (GCFI) protection for all outdoor receptacles.
13. Provide alternator to provide alternate switching of pump motors as specified.
14. Provide a 60-watt, 120Vac heating element with thermostat designed to maintain temperature within control panel at 40ºF.
15. Panel shall be mounted with bottom located a minimum of 3 ft.-0 inches above top of basin.
16. If pumping conditions permit:
    a. Variable frequency drives (VFDs) with programmable logic control (PLC) and human machine interface (HMI) control shall be installed and used for wet well level control and pump control.
    b. Either pressure transducers or ultra-sonic measurement shall be used for level control and speed control of VFDs.
17. If installed with VFD/PLC, the ability to switch standard mercury switch floats by manipulation of a two-position switch shall be included.

C. Disconnect Switch:
1. NEMA 4 construction.
2. Mounted to control panel rack.
3. Adequately sized to interrupt power feeder to lift station.
4. Rated for 460V, 3-phase, 60-hertz operation.
5. Must contain a fuse.

D. Control Switches:
1. Shall be Manual-Stop-Auto.
2. Shall be mounted on the front of the control panel.
3. Provide one for each pump with green (stop) and red (running) lights, and white phenolic name tags with black letters.

E. Electromagnetic Flow Meters:
1. Shall be provided on discharge force main.
2. Acceptable manufacturers:
    a. Siemens.
    b. Krohne.
    c. Toshiba.
    d. Engineer-approved equal.

F. Alarm Systems
1. All lift stations shall have local alarms that include visual and audible alarms.
    a. The alarm system must have an uninterrupted power source.
2. All lift stations shall have telemetry cellular dialing systems.
    a. Cellular dialing systems shall be OmniSite brand cellular radio supported by GUARDDOG.

b. Approved Models shall be Crystal Ball. No substitutions are allowed unless otherwise approved by the City.

3. Alarms shall be included for all of the following:
   a. Loss of power
   b. High wet well
   c. Pump failure
   d. Phase failure
   e. Generator failure
   f. Low fuel
   g. Seal failure
   h. Motor/pump high temperature
   i. Unauthorized entry
   j. VFD/PLC failure (if applicable)
   k. Others to be determined by the City

PART 3 - EXECUTION

3.01 TRANSPORTATION AND SHIPMENT:

A. Shipment Preparation:
   1. Contractor shall prepare Equipment and Materials for shipment in a manner to facilitate unloading and handling, and to protect against damage or unnecessary exposure in transit and storage. Provisions for protection shall include the following:
      a. Crates or other suitable packaging materials.
      b. Covers and other means to prevent corrosion, moisture damage, mechanical injury, and accumulation of dirt in motors, electrical equipment, and machinery.
      c. Suitable rust-preventive compound on exposed machined surfaces and unpainted iron and steel.
      d. Grease packing or oil lubrication in all bearings and similar items.

B. Marking: Each item of Equipment and Material shall be tagged or marked as identified in the delivery schedule or on Submittals. Complete packing lists and bills of material shall be included with each shipment. Each piece of every item need not be marked separately, provided that all pieces of each item are packed or bundled together, and the packages or bundles are properly tagged or marked.

3.02 DELIVERY:

A. Delivery:
   1. Deliver Equipment and Materials to the Site in manufacturer's sealed containers or other packaging system with identifying labels and instructions for handling, storing, unpacking, protecting, and installing.

3.03 INSTALLATION:

A. Pump and Accessories:
   1. Install pump mounting assembly, guide rail assembly, and access frame and door in concrete pump structure.
   2. Install pump in sump as indicated and in accordance with manufacturer's recommendations.
   3. Install all discharge piping as required for complete functional system.

B. Control Panel:
   1. Install on top slab of pump structure as indicated.
   2. Provide a support base such that the bottom of the panel is 3 feet above the top of concrete.

3. Provide all required support and mounting hardware to provide rigid mounting.

C. Odor and Corrosion Control:

1. Force main discharge manhole and five (5) manholes downstream of that point shall receive a full depth hydrogen sulfide (H_2S) resistant liner. Liner shall be a hydrogen sulfide epoxy coating that is easily identifiable from a standard concrete manhole.
2. Project specific guidance shall be provided in the case where H_2S levels require alternative pipe materials (e.g., PVC or HDPE), special concrete admixtures, or specific H_2S treatment systems.

3.04 ELECTRICAL WIRING:

A. Wire all devices and equipment as specified.

3.05 START UP:

A. Adjustment:

1. Adjust all level switches to provide proper response.
2. Calibrate all monitoring devices to provide correct response.

B. Field Quality Control:

1. Contractor shall demonstrate the correct response for all monitors and devices.

END OF SECTION 331223

This page was intentionally left blank.

SECTION 333150 - PIPE INSTALLATION

PART 1 - GENERAL

1.01 SUMMARY:

A. This Section includes handling, installation and testing of pipes, fittings, specials, and appurtenances as indicated or specified.

B. Related Work Specified Elsewhere:
   1. Utility Structures: SECTION 333900.
   2. Pressure Pipe: SECTION 331100.
   3. Utility Valves and Accessories: SECTION 331216.

1.02 REFERENCES:

A. Applicable Standards:
   1. American Society for Testing and Materials (ASTM):
      a. C969 – 17 – Standard Practice for Infiltration and Exfiltration Acceptance Testing of Installed Precast Concrete Pipe Sewer Lines
      b. C1244 – 11 (2018) – Standard Test Method for Concrete Sewer Manholes by the Negative Air Pressure (Vacuum) Test Prior to Backfill
      c. D2321 - Underground Installation of Flexible Thermoplastic Sewer Pipe.
      d. F1417 – 11a (2015) – Installation Acceptance of Plastic Gravity Sewer Lines Using Low-Pressure Air.

   2. American Water Works Association (AWWA):
      a. C105 - Polyethylene Encasement for Ductile-Iron Pipe Systems.
      b. C203 - Coal-Tar Protective Coatings and Linings for Steel Water Pipelines -Enamel and Tape- Hot-Applied.
      c. C205 - Cement-Mortar Protective Lining and Coating for Steel Water Pipe - 4 Inch and Larger - Shop Applied.
      d. C206 - Field Welding of Steel Water Pipe.
      e. C209 - Cold-Applied Tape Coatings for the Exterior of Special Sections, Connections, and Fittings for Steel Water Pipelines.
      f. C600 - Installation of Ductile-Iron Water Mains and Their Appurtenances.
      g. C651- Disinfecting Water Mains.
      h. M11 - Steel Pipe - A Guide for Design and Installation.
      i. M23 - PVC Pipe - Design and Installation.
   3. Federal Specifications (FS):
      a. SS-S-00210 - Sealing Compound, Preformed Plastic, For Expansion Joints and Pipe Joints.

1.03 DELIVERY, STORAGE AND HANDLING:

A. Handle in a manner to ensure installation in sound and undamaged condition.
   1. Do not drop or bump.
   2. Use slings, lifting lugs, hooks, and other devices designed to protect pipes, joint elements, linings, and coatings.
   3. Do not drag across ground, as this may scrape off coating and is grounds for rejection of material.

B. Ship, move, and store with provisions to prevent movement or shock contact with adjacent units.

SECTION 333150 - PIPE INSTALLATION: continued

C. Handle equipment capable of working with adequate factor of safety against overturning or other unsafe procedures.

PART 2 - PRODUCTS

2.01 Specified in respective Sections.

PART 3 - EXECUTION

3.01 INSTALLATION - GENERAL:

A. Use equipment, methods, and materials ensuring installation to lines and grades indicated.
   1. Maintain within tolerances specified or acceptable laying schedule.
      a. Alignment: ±1 inch per 100 feet in open cut or tunnel.
      b. Grade: ±1 inch per 100 feet.
   2. Do not lay on blocks unless pipe is to receive total concrete encasement.
   3. Accomplish horizontal and vertical curve alignments with bends, bevels, and joint deflections.
      a. Limit joint deflection with ductile-iron pipe to conform to AWWA C600. Deflection may, with approval, exceed standard deflections by using machined bells.
      b. Use short specials preceding curves as required.
   4. Obtain acceptance of method proposed for transfer of line and grade from control to the Work.
B. Install pipe of size, materials, strength class, and joint type with embedment indicated for plan location.
C. All sewers shall either have minimum cover of thirty-six inches (36-inches), or sufficiently insulated with other material such as concrete encasement to prevent freezing and to protect them from superimposed loads.
D. Heavier weight pipe required when at depths of 9 feet or greater.
E. Insofar as possible, commence laying at downstream end of line and install pipe with bell ends in direction of flow. Obtain Engineer approval for deviations therefrom.
F. Clean interior of all pipe, fittings, and joints prior to installation. Exclude entrance of foreign matter during installation and at discontinuance of installation.
   1. Close open ends of pipe with snug-fitting closures.
   2. Do not let water fill trench. Include provisions to prevent flotation should water control measures prove inadequate.
   3. Remove water, sand, mud, and other undesirable materials from trench before removal of end cap.
G. Brace or anchor as required to prevent displacement after establishing final position.
H. Perform only when weather and trench conditions are suitable. Do not lay in water.
I. Observe extra precaution when hazardous atmospheres might be encountered.

3.03 DUCTILE-IRON PIPE:

A. See Standard Detail #8 for Laying Conditions for Ductile Iron Pipe Type 1 (Under Driving Surface).
B. See Standard Detail #9 for Laying Conditions for Ductile Iron Pipe Type 2 (Not Under Driving Surface).

3.04 TRACER WIRES:

A. A tracer wire shall be installed directly above and adjacent to all pressure pipe and water/sewer laterals during backfill operations. All wire splices shall be made with either rigid fittings or

weatherproof connectors specifically designed for direct burial.

1. Tracer wires for water mains shall be extended to the surface into valve boxes at each gate valve and fire hydrant isolation valve. Construct additional access points as described herein to obtain a maximum spacing of access points of 1,000 feet.
    a. A 4' copper grounding rod shall be driven into the trench bottom at 1,000 foot spacing, at the location where the pressurized pipe crosses property lines or changes direction and secured to the tracer wire with rigid fittings
2. Tracer wires for water laterals shall be rigidly affixed to the water main's tracer wire and extended into each meter pit.
3. Tracer wires for sewer laterals shall meet state standards.

3.05 SEWER MARKERS:

A. Aboveground sewer force main markers are required on property lines, at every change in direction and every 1,000 feet.

3.06 JOINTING:

A. General Requirements:
    1. Locate joint to provide for differential movement at changes in type of pipe embedment, impervious trench checks, and structures.
        a. Not more than 8 inches from structure wall, or
    2. Support pipe from wall to first joint with concrete cradle structurally continuous with base slab or footing. Perform conforming to manufacturer's recommendations.
    3. Clean and lubricate all joint and gasket surfaces with lubricant recommended.
    4. Use methods and equipment capable of fully seating or making up joints without damage.
    5. Check joint opening and deflection for specification limits.
B. Special Provisions for Jointing Ductile-Iron Pipe:
    1. Conform to AWWA C600.
    2. Visually examine while suspended and before lowering into trench.
        a. Paint bell, spigot, or other suspected portions with turpentine and dust with cement to check for cracks invisible to the eye.
        b. Remove turpentine and cement by washing when test is satisfactorily completed.
C. Special Provisions for Jointing Steel Pressure Pipe:
    1. Conform to AWWA M11.
    2. Check for holidays in coating and make repairs as required.
    3. Weld pipe and fittings to conform to AWWA C206.
    4. Grout inside joints of welded pipe and fittings mortar lined conforming to AWWA C205.
    5. Apply epoxy coating to inside of welded joints in pipe 24 inches and larger.
    6. Apply cold tape coating conforming to AWWA C209 to buried exterior connections, special sections, fittings, couplings, and bare metal.
D. Special Provisions for Jointing PVC Pipe and Composite Sewer Pipe:
    1. Conform to ASTM D2321. (Pressure pipe installation shall also conform to AWWA M23.)
    2. Excavate bell holes at each joint or coupling to provide full length barrel support of the pipe and to prevent point loading at the bells or couplings.
    3. Seal cut face of any joint of Composite Sewer Pipe installed to prevent exfiltration during air testing.
    4. Connect pipe to new or existing rigid structures or manhole tie-ins with manhole couplings.
E. Special Provisions for Grooved-End and Shouldered Type Joints:

1. Use fittings and couplings that are made by the same manufacturer that are listed for use together.
2. Assemble joints with coupling, gasket, lubricant, and bolts according to manufacturer's written instructions.

F. Special Provisions for Jointing Subaqueous Installations:

3.07 ELECTRICAL BONDING AND INSULATION:

A. Electrically bond adjacent lengths of pipe and fittings as indicated.
B. Use materials specified in SECTION 331100 applied to conform to manufacturer's instructions.
C. Install insulated joints of dielectric materials.
   1. Where indicated.
   2. Between dissimilar materials which could cause galvanic action.
   3. Conform to manufacturer's instructions.

3.08 CUTTING:

A. Cut in neat manner without damage to pipe.
B. Observe Specifications regarding joint locations.
C. Cut cast-iron, ductile-iron, and steel pipe with carborundum saw or other acceptable method per manufacturer's instructions.
   1. Smooth cut by power grinding to remove burrs and sharp edges.
   2. Repair lining as required and approved.

3.09 CLOSURE PIECES:

A. Connect two segments of pipeline or a pipeline segment and existing structure with short sections of pipe fabricated for the purpose.
B. Observe Specifications regarding location of joints, type of joints, and pipe materials and strength classifications.
C. Field-fabricated closures, where required, shall be concrete encased between adjacent flexible joints.
D. May be accomplished with sleeve coupling:
   1. Of length such that gaskets are not less than 3 inches from pipe ends.
   2. Wrap exterior of buried steel couplings with polyethylene encasement conforming to AWWA C105.

3.10 TEMPORARY PLUGS:

A. Furnish and install temporary plugs at each end of Work for removal by others when completed ahead of adjacent contract.
B. Remove from pipe laid under adjacent contract in order to complete pipe connection when work by other contractor is finished prior to work at connection point under this Contract.
C. Plugs:
   1. Test plugs as manufactured by pipe supplier.
   2. Fabricated by Contractor of substantial construction.
   3. Watertight against heads up to 1.5 times test pressure.
   4. Secured in place in a manner to facilitate removal when required to connect pipe.

3.11 CONNECTIONS TO EXISTING STRUCTURES:

A. Connect pipe to existing structures and pipelines where indicated.
B. Prepare structure by making an opening with at least 3 inches clearance all around fitting to be inserted.
C. Observe pertinent articles of Specifications pertaining to joint locations and closures.

D. Repair wall opening with non-shrink grout.

3.12 POLYETHYLENE ENCASEMENT:

A. Encase pipe, fittings, valves, and other appurtenances with polyethylene film as indicated or specified.

B. Materials:
   1. Polyethylene material shall be as follows:
      a. Conform to AWWA C105.
      b. Class C Black.
   2. Adhesive tape shall be as follows:
      a. Approximately 2 inches wide and plastic backed.
      b. Capable of bonding securely to metal surfaces and/or polyethylene material.
      c. Polyken No. 900, Scotchrap No. 50, or Engineer-approved equal.

C. Installation:
   1. Perform to conform to AWWA C105.
   2. Use adhesive tape to fasten polyethylene film in place.
   3. Minimize exposure of polyethylene film to sunlight.
   4. Wrap pipe, valves, fittings, and couplings per AWWA C105 installation standards.

3.13 FIELD TESTING:

A. Acceptance Tests for Gravity and Low-Pressure Pipelines:
   1. Alignment:
      a. Sewer shall be inspected by flashing a light between manholes or by physical passage where space permits.
      b. Contractor shall clean pipe of excess mortar, joint sealant, and other dirt and debris prior to inspection.
      c. Determine from Illumination or Physical Inspection:
         (1) Presence of any misaligned, displaced, or broken pipe.
         (2) Presence of visible infiltration or other defects.
      d. Correct defects as required prior to conducting leakage tests.
   2. Leakage Test:
      a. Exfiltration testing of all manholes shall be performed by Contractor and shall be tested separately from the pipe.
         (1) Manholes shall be tested by vacuum testing. Vacuum testing shall conform to the test procedures in ASTM C1244 – 11(2017)
         (2) Contractor shall locate any leaks and repair any leaks located by vacuum testing.
   3. Air Testing: Perform air tests per ASTM F1417 – 11a(2015) for plastic pipe at Contractor's option in lieu of exfiltration test for pipe sizes up to and including 42 inches in diameter.
      a. Furnish all facilities required including:
         (1) Necessary piping connections.
         (2) Test pumping equipment.
         (3) Pressure gauges or manometers.
         (4) Bulkheads.
         (5) All miscellaneous items required.
      b. Obtain approval of equipment and acceptance of methods proposed for use.
      c. Conduct initial test on first section of pipe laid by each crew.
         (1) Include a minimum of 10 lengths of pipe but not to exceed 90 m (300 feet).
         (2) Satisfactorily complete test before crew is permitted to continue pipe installation.

d. Test remaining pipe in sections determined by Contractor and approved by Engineer.
e. Plug ends of line and cap or plug all connections to withstand internal test pressures.
f. Introduce low-pressure air until internal air pressure is 4.0 psi greater than the average back pressure of ground water above the pipe invert.
g. Allow two to five minutes for air pressure to stabilize. Adjust pressure to 3.5 psi and start test.
h. Time required for pressure to decrease 1.0 psi from 3.5 to 2.5 psig greater than the average back pressure of any ground water above the pipe invert shall not be less than the minimum test time in the following table for the given diameters:

Minimum Test Times (Minutes) in Plastic Pipe

Nominal Pipe Diameter	Minimum Time (min.)*	Length for Min. Time	Time for Longer Length(s)*
4 in.	3:46	597 ft.	0.380 L
6 in.	5:40	398 ft.	0.854 L
8 in.	7:34	298 ft.	1.520 L
10 in.	9:26	239 ft.	2.374 L
12 in.	11:20	199 ft.	3.418 L
15 in.	14:10	159 ft.	5.342 L
18 in.	17:00	133 ft.	7.692 L
21 in.	19:50	114 ft.	10.470 L
24 in.	22:40	99 ft.	13.674 L
27 in.	25:30	88 ft.	17.306 L
30 in.	28:20	80 ft.	21.366 L
33 in.	31:10	72 ft.	25.852 L
36 in.	34:00	66 ft.	30.768 L

* For 0.5 psi pressure test drop, required test times shall be exactly one-half the values shown.

i. Repeat test as necessary after all leaks and defects have been repaired.

B. Acceptance Tests for Pressure Pipelines:
1. Perform hydrostatic pressure and leakage tests.
a. Conform to AWWA C600 procedures.
(1) As modified herein.
(2) Shall apply to all pipe materials specified.
b. Perform after backfilling.
2. Test separately in segments between sectionalizing valves, between a sectionalizing valve and a test plug, or between test plugs.
a. Select test segments such that adjustable seated valves are isolated for individual checking.
b. Contractor shall furnish and install test plugs.
(1) Including all anchors, braces, and other devices to withstand hydrostatic pressure on plugs.
(2) Be responsible for any damage to public or private property caused by failure of plugs.
3. Limit fill rate of line to available venting capacity. Fill rate shall be regulated to limit velocity in lines when flowing full to not more than 0.05 to 1 fps.
4. The City shall make water for testing available to Contractor at nearest source.
5. Pressure and Leakage Test:

a. Test pressure shall not be less than 1.5 times the working pressure at the highest point along the test section.
b. Be at least 2-hour duration. Maintain pressure throughout test ±5 psi of test pressure.
c. Leakage test shall be conducted concurrently with the pressure test.
d. Acceptable when leakage does not exceed that determined by the following formula:
   (1) In English units:
   $L = 0.0000075\ SD(P)^{1/2}$, in which
   L = allowable leakage, in gallons per hour
   S = length of pipe tested, in feet
   D = nominal diameter of the pipe, in inches
   P = average actual leakage test pressure in psi
e. These formulas are based on an allowable leakage of 11.65 gpd/mile/in of nominal diameter at a pressure of 150 psi.
f. When testing against closed metal-seated valves, an additional leakage per closed valve of 0.0078 gal/hr/in of nominal valve size shall be allowed.
g. When hydrants are in the test section, the test shall be made against the main valve in the hydrant.
h. Repeat test as necessary.
   (1) After location of leaks and repair or replacement of defective joints, pipe, fittings, valves or hydrants. All visible leaks are to be repaired regardless of the amount of leakage.
   (2) Until satisfactory performance of test.
i. The City will witness pressure and leakage test.

C. Deflection Testing:
1. Maximum installed deflections of flexible pipe shall be as follows:

Type of Pipe	Deflection - Percent of Mean Internal Diameter
Composite Pipe	5
PVC Pipe	5
Steel Pipe (lined)	2

2. Deflection testing on pipe between manholes shall occur no sooner than 30 days after backfill has been in place.
   a. Provide rigid ball or mandrel deflection testing equipment and labor.
   b. Obtain approval of equipment and acceptance of method proposed for use. Test shall be performed without mechanical pulling devices.
   c. Remove and replace pipe exceeding deflection limits.

D. Soil Corrosion Testing:
1. Perform electrical conductivity test on bonded pipe segments.
2. Perform pipe-to-soil potential surveys.
3. Submit 3 copies of test and survey reports to Engineer.

3.14 DISINFECTION:

A. Disinfection of Pipelines for Conveying Potable Water:
1. Conform with AWWA C651.
   a. As modified herein.
   b. Include preliminary flushing, chlorination, and final flushing.
2. The City will accomplish chlorination.

a. In conjunction with pressure testing.
b. At minimum initial dosage of 25 mg/L (ppm) chlorine in all portions.
c. Contractor provide labor assistance and service connections as indicated or as requested.

3. Contractor shall perform preliminary and final flushing.
4. Minimum preliminary flushing rates to produce 2.5 fps velocity in main shall be as follows:

Pipe Size	Flow Rate	Hydrant Outlets No. of (2-1/2-inch
4"	100 gpm	1
6"	200 gpm	1
8"	400 gpm	1
10"	600 gpm	1
12"	900 gpm	1
16"	1600 gpm	2

a. Valve hydrant outlet to control flow. With a 40 psi pressure in the main with the hydrant flowing to atmosphere, a 2-1/2-inch hydrant outlet will discharge approximately 1,000 gpm and a 4-1/2-inch hydrant outlet will discharge approximately 2,500 gpm.
b. Flush pipeline before use for potable water supply purposes. Dispose of preliminary flushing water without damage to public or private property.

5. Dispose of final flushing water without damage to public or private property. Continue until tests conducted by the City prove acceptable.
6. Repeat disinfection process should initial treatment fail to yield satisfactory results.
   a. At the expense of Contractor, including cost of additional water.
   b. The City will provide sampling and laboratory testing.

B. Disinfection of Pipelines for Conveying Potable Water:
1. Contractor shall provide all equipment and materials and perform conforming to AWWA C651.
   a. As modified herein.
   b. Include preliminary flushing, chlorination, and final flushing.
2. Obtain approval of materials and acceptance of methods proposed for use.
3. May be conducted in conjunction with acceptance tests.
4. The City will provide sampling and laboratory testing.
5. Minimum preliminary flushing rates to produce 2.5 fps velocity in main shall be as follows:

Pipe Size	Flow Rate	Hydrant Outlets No. of 2-1/2-inch
4"	100 gpm	1
6"	200 gpm	1
8"	400 gpm	1
10"	600 gpm	1
12"	900 gpm	1
16"	1600 gpm	2

a. Valve hydrant outlet to control flow. With a 40 psi pressure in the main with the

hydrant flowing to atmosphere, a 2-1/2-inch hydrant outlet will discharge approximately 1,000 gpm and a 4-1/2-inch hydrant outlet will discharge approximately 2,500 gpm.

b. Flush pipeline before use for potable water supply purposes. Dispose of preliminary flushing water without damage to public or private property.

6. At minimum initial dosage of 50 mg/L (ppm) in all portions.
   a. Allow to stand for 8 hours.
   b. Minimum residual shall be at least 10 mg/L (ppm).
   c. Flush pipeline before use for potable water supply purposes. Dispose of final flushing water without damage to public or private property.
7. Repeat disinfection procedure should initial treatment fail to yield satisfactory results.
   a. At no additional cost to the City.
   b. The City will provide water under terms stipulated for acceptance tests.

END OF SECTION 333150

This page was intentionally left blank.

SECTION 333213 - SEWAGE LIFT STATION - WET WELL MOUNTED

PART 1 - GENERAL

1.01 SUMMARY:

A. Furnish and install one, wet well mounted, suction lift, sewage lift station(s) with (two) (three), (constant) (variable) speed, electric motor driven pumps and fully automatic operation.

B. Related Work Specified Elsewhere:
   1. Site Work: DIVISION 31.

1.02 REFERENCES:

A. Applicable Standards:
   1. American Institute of Steel Construction (AISC):
      a. Steel Construction Manual
      b. Quality Criteria and Inspection Standards.
   2. American National Standards Institution (ANSI):
      a. B16.1 Cast-Iron Pipe Flanges and Flanged Fittings.
   3. American Society for Testing and Materials (ASTM):
      a. A36 - Carbon Structural Steel.
      b. A283 - Low and Intermediate Tensile Strength Carbon Steel Plates of Structural Quality.
      c. A126 - Gray Iron Casting for Valves, Flanges and Pipe Fittings.
      d. B88 - Copper Water Tube.
   4. American Water Works Association (AWWA):
      a. C150 - Thickness Design of Ductile Iron Pipe.
      b. C110 - Cast Iron Fittings 2-inch Through 48-inch For Water and Other Liquids.
      c. C111 - Rubber Gasket Joints for Cast-Iron Pressure Pipe and Fittings.
   5. American Welding Society (AWS):
      a. D1.1 – Structural Welding Code.
   6. American Bearing Manufacturing Association (ABMA).
   7. Institute of Electrical and Electronic Engineers (IEEE).
   8. National Fire Protection Association (NFPA):
      a. 70- National Electrical Code (NEC).
   9. National Electrical Manufacturing Association (NEMA).
   10. Hydraulics Institute Standards.

1.03 SUBMITTALS:

A. Submit as specified in DIVISION 1.

B. Provide initial Submittals for general arrangement and dimensions, anchorage details, pipe and utility connections, and pump head capacity curves.

C. Instruction Books:
   1. Provide instruction books containing information for all apparatus furnished with the lift station, including but not limited to:
      a. Pumps and Motors.
      b. Ventilating Fans or Blowers.
      c. Heaters.
      d. Vacuum Pumps.
      e. Piping and Valves.
      f. Electrical Power Panels and Starters.

g. Controls and Alarms.

h. Corrosion Protection.

2. Provide complete installation, start-up and operating instructions for each station and all apparatus included.

D. Include a schedule of maintenance requirements, complete with specifications for consumable items such as lubricants, filters, paints, packing, and related items.

1.04 DELIVERY AND HANDLING:

A. Provide for delivery, handling, unloading, and storage:
   1. As specified in DIVISION 1.
   2. In compliance with manufacturer's instructions.

B. Maintain all internal bracing, closures, covers, caps, or plugs in place until station is installed and external connections are made.

1.05 FACTORY TESTS:

A. Conduct an operational test to all Equipment of completed lift station to check for:
   1. Excessive vibration.
   2. Leaks in all piping and seals.
   3. Faults in the automatic control system.
   4. Faults in auxiliary Equipment.

B. Test completed lift station under simulated service conditions for one hour.

PART 2 - PRODUCTS

2.01 GENERAL

A. Flood protection will be required for facilities within the 100-year floodplain. Protections shall include structures, electrical equipment, and mechanical equipment.

B. Pump stations must be accessible by authorized personnel from a public right-of-way at all times.

C. Fencing is required enclosing the facility.

D. A watertight seal and separate strain relief shall be provided for all pump electrical flexible cables.

2.02 ACCEPTABLE MANUFACTURERS:

A. Complete Lift Station:
   1. Dakota Pump, Inc.
   2. Smith & Lovelace, Inc.
   3. Engineer approved equal.

B. Motors:
   1. General Electric.
   2. Reliance Electric.
   3. Siemens Energy and Automation.
   4. U.S. Motors.
   5. Engineer approved equal.

2.03 ENCLOSURE (ABOVE GRADE):

A. Fabricate a complete factory-built unit housing all components of the station except suction piping and level sensors.

SECTION 333213 - SEWAGE LIFT STATION - WET WELL MOUNTED: continued

1. Size to rest on wet well as indicated.
2. Floor shall be ASTM A36 or A283 mild or intermediate grade steel.
   a. Minimum thickness of 3/8 inches.
   b. Reinforce to prevent deflection with station equipment dead load and 300 pounds live load.
3. Provide a sliding fiberglass cover of weatherproof construction, when applicable and a hinged lid when a sliding cover is not feasible with the following:
   a. A means of securely locking cover to the enclosure floor.
   b. With a hinged lid, include a lifting handle and latch mechanism to maintain lid in the open position under 60 mph wind load, from any direction.
   c. With a hinged lid, gas assisted struts shall be provided for lift assistance.
   d. Adjustable ventilating louvers capable of being closed during cold weather operation.
4. Provide a steel wet well access cover in the station floor with the following:
   a. Hinged along one edge.
   b. A means of securely locking cover to the floor.
   c. A lifting handle.
   d. Minimum opening size: 18x24 inches.
   e. Exterior to the pump enclosure.
5. Covered wet wells must have provisions for air displacement to the atmosphere. An inverted and screened “J” tube or other means may be used.
   a. Housed wet well ventilation shall be in accordance with 10 CSR 20-8.30(2)(E) and 10 CSR 20-8.140(8)(J) per DNR.
   b. Ventilation shall include the following:
      (1) Isolate all pumping stations and wastewater treatment components installed in a building where other equipment or offices are located from the rest of the building by an air-tight partition, provide separate outside entrances, and provide separate and independent fresh air supply.
      (2) Force fresh air into enclosed screening device areas or open pits more than four feet (4') deep. Also see 10 CSR 20- 8.130(3)(F).
      (3) Dampers. Dampers are not to be used on exhaust or fresh air ducts. Avoid the use of fine screens or other obstructions on exhaust or fresh air ducts to prevent clogging.
      (4) Continuous ventilation. Where continuous ventilation is needed (e.g., housed facilities), provide at least twelve (12) complete air changes per hour. Where continuous ventilation would cause excessive heat loss, provide intermittent ventilation of at least thirty (30) complete air changes per hour when facility personnel enter the area. Base air change demands on one hundred percent (100%) fresh air.
      (5) Electrical controls. Mark and conveniently locate switches for operation of ventilation equipment outside of the wet well or building. Interconnect all intermittently operated ventilation equipment with the respective wet well, dry well, or building lighting system. The manual lighting/ventilation switch is expected to override the automatic controls. For a two (2) speed ventilation system with automatic switch over where gas detection equipment is installed, increase the ventilation rate automatically in response to the detection of hazardous concentrations of gases or vapors.
      (6) Fans, heating, and dehumidification. Fabricate the fan wheel from non-sparking material. Provide automatic heating and dehumidification equipment in all dry wells and buildings. Follow the provisions in subsection (7)(B) of this rule for

electrical controls per DNR Section 10 CSR 20- 8.140(7)(B).

2.04 ENCLOSURE: (BELOW GRADE):

A. Fabricate a complete factory-built unit housing all components of the station except suction piping and level sensors.
   1. Size to rest on wet well as indicated.
   2. Minimum diameter 6 feet 10 inches.
   3. Floor walls shall be ASTM A36 or A283 mild or intermediate grade steel.
   4. Covered wet wells must have provisions for air displacement to the atmosphere. An inverted and screened “J” tube or other means may be used.
   5. Floor plate:
      a. Minimum thickness of 3/8 inches.
      b. Reinforced to prevent deflection with station Equipment dead load and 300 pounds live load.
   6. Wall Shell:
      a. Minimum thickness of 1/4 inches.
      b. Reinforced to resist earth backfill loads.
   7. Equipment Chamber:
      a. Completely isolated from the wet well access chamber.
      b. Gas-tight construction.
      c. Provide with a sliding fiberglass (or steel) cover if possible. If a sliding cover is not possible, provide a hinged cover gas assisted struts to be provided with the following:
         (1) A means of securely locking cover to wall rim.
         (2) Lifting handles and brackets to provide support and restraint for cover in the open position.
      d. Provide with access ladder.
   8. Wet Well Access Chamber:
      a. Provide with a hinged access cover with the following:
         (1) Minimum opening size: 18x24 inches.
         (2) A means of securely locking to the chamber roof.
         (3) A lifting handle.
      b. Provide with vent pipe for wet well.
      c. Provide with access ladder to wet well steps.

2.05 SEWAGE PUMPS:

A. The Engineer shall submit the items following as part of the design for City approval.
B. Capable of delivering_____gpm of raw unscreened sewage at_____feet total dynamic head.
C. Rated at a maximum of_____rpm.
D. Maximum suction lift as indicated.
E. Minimum pump efficiency of_____.
F. Large enough to permit passage through openings and passages of a 3-inch-diameter sphere and all trash of stringy material which can pass through a 4-inch pipe.
G. Operating head range from_____feet static to approximately_____feet maximum at shutoff.
H. Not less than 4-inch size.
I. Vertical, close coupled, "Nonclog" sewage pumps especially designed for the use of mechanical seals and vacuum priming.
J. Heavy cast-iron construction.

K. Vertical motor with pump impeller mounted directly on the one piece motor-pump shaft.
L. Motor mounted directly on a short adapter.
M. Combination pump and motor shaft of high-strength carbon steel. If welded into a one-piece shaft, anneal shaft before machining with stainless steel sleeves.
N. All required bearing designed for L10 bearing life of 50,000 hours minimum.
O. Seals:
    1. Single or double mechanical seals are acceptable.
    2. Carbon and ceramic construction.
    3. Rotating ceramic(s) held in mating position with the stationary carbon(s) by a stainless-steel spring.
    4. Lubricating water - low pressure systems.
        a. Fill around seal each time pump is primed.
        b. Drain from around seal automatically with loss of prime.
    5. Lubricating water - high pressure systems.
        a. Pressurized, filtered water from pump volute.
        b. Seal water lubrication filtering shall be of multiple stage filtering, with the final filter providing filtration of no larger than 50 microns.
P. Enclosed type impellers:
    1. Made of close-grained cast iron.
    2. Impeller shall be ceramic coated (if available).
    3. Hydraulic and dynamic balanced.
    4. Keyed to shaft by a self-locking device, not screwed or pinned to the motor pump shaft.
    5. Removable without the use of special tools.
    6. All trimming of impeller shall be done inside the shrouds. Shrouds shall remain full diameter.
Q. Equipped with volutes of heavy cast-iron construction.
    1. Free from opening or projections that might cause clogging or interference with flow through the pump.
    2. Furnished with mounting lugs bolted to floor for gas tight seal.
    3. Flanged and drilled for 125-psi American Standard flange connections.

2.06 PUMP MOTORS

A. Conform to NEMA, IEEE, ANSI, and ABMA.
B. Vertical, solid shaft, open drip-proof, squirrel cage induction type suitable for___-V,___-Hz, and___-phase operation. The Engineer shall submit these as part of the design to the City for approval.
C. NEMA design B.
D. Adequately sized to drive pump at any head in the operating range without using more than 10 percent of the motor service factor.
E. Oversized, grease-lubricated ball bearings with the thrust bearing at the bottom locked in position to eliminate shaft end play, with minimum bearing life of 5 years to conform to ABMA.
F. Motor pump shaft of one-piece construction from top of motor down through impeller.
G. Motor shaft of adequate strength and stiffness for intended service.
H. Fitted with heavy lifting "eyes" capable of supporting the entire weight of pump and motor.
I. Coated with special rust-preventative compounds on the interior elements and furnished with special moisture-resistance insulation to protect the motor against high-humidity conditions.
J. Rated for 40 degrees C ambient temperature with 1.15 service factor.
K. Stator winding insulation of Class "F," nonhygroscopic type insulation.

2.07 ELECTRICAL EQUIPMENT:

A. Conform to NEC, NEMA, and IEEE on all electrical Equipment.

B. The Engineer shall submit items specified herein as part of the Design to the City for approval.

C. Controls:

1. Include 110V power receptacle inside any control panels located outdoors.
2. Provide ground fault circuit interruption (GCFI) protection for all outdoor receptacles.
3. Install a fused disconnect switch located above ground for the main power feed.
4. Install lighting and surge protection systems.
5. Control Equipment mounted in a NEMA Type 1 enclosure to conform to the following:
   a. Enclosure fabricated of code gage steel.
   b. Size to provide ample clearances of Equipment and wiring.
   c. Circuit breaker, motor starter and control Equipment section of the dead front design with hinged doors.
   d. Selector switches, blower timer, humidistat and thermostat and 115-volt convenience outlet accessible from cabinet front.
6. Thermal Magnetic Air-Circuit Breakers:
   a. Minimum interrupting capacity of____A symmetrical at____V ac and____A at _____V ac.
   b. Operable from front of panel without opening door.
   c. Used on circuits requiring a disconnecting means.
   d. Used to provide overcurrent protection for each circuit.
7. Motor Starter:
   a. Magnetic, full-voltage, nonreversing type.
   b. Suitable for_____-V,_____-phase,____-Hz service.
   c. _____thermal overload relays (one in each phase) and a_____-V control transformer.
   d. Overload heaters and starters sized for motors furnished.
8. Transformers:
   a. Dry-type rated_____V,_____Hz, and single phase.
   b. Adequately sized for all control and lighting circuits including_____watts of exterior lighting.
9. Pump Control Switches:
   a. Control the starting and stopping of individual pumping units.
   b. Stagger starting of both pump sets when the lag float is called to start both pump sets.
   c. Mercury displacement, float type switches.
   d. Provide with a minimum of____feet of cord. Cord splices will not be approved.
   e. Cord wiring to be stranded.
   f. Cord jacket to be corrosion resistant vinyl.
   g. Capable of a minimum differential of____inches of water.
   h. Low water cut off float switch (emergency off).
   i. Operating Levels:
      (1) Lead pump:
      ON-Elev
      OFF-Elev
      (2) Second pump:
      ON-Elev _____
      OFF-Elev _____
      (3) High Level Alarm Elev_____.

10. Automatic alternator to provide alternate selection of the base loaded pump on the completion of each pumping cycle and as follows:
    a. Selector switch to permit manual operation of either pump.
    b. Relays, wiring and other equipment as required to allow pumps to operate in parallel.
    c. Pumps shall alternate after each cycle to promote even wear.

D. Line Voltage and Phase Monitor Unit:
1. Pump motors protected against undervoltage and single-phasing conditions.
2. Time delay relay unit for staggered starting on pumps on restoration of power.
3. Model MM480 Motor Minder as manufactured by Palo Duro Industries Corporation, or engineer approved equal.
4. Resetable counter to indicate number of outages.

E. Enclosure Lighting:
1. 20 FC illumination at 24 inches above enclosure floor.
2. Controlled by a limit switch on enclosure cover and a manual switch.
3. Manufacturer's standard rough service LED fixtures with wire graded.

F. Wiring:
1. Conform to NEC.
2. Color-coded wiring.
3. In rigid hot-dip galvanized conduit, except that within panel and_____-V ac accessory items which are provided with connecting insulated service cord.
4. Provide power and alarm conduits from control panel to threaded exterior service conduit connections. Terminate in an adequately sized gasketed pull box or conduit fitting inside enclosure.
5. Grounded, polarized, convenience outlets, conveniently located, for accessory equipment unless conduit is used.
6. Intrusion alarm system in a rigid conduit system.

2.08 EMERGENCY POWER AND CONNECTIONS:

A. All lift stations shall have for backup power supply, generators sufficiently sized to operate all the pumps in the station running at the same time, with power in reserve. Depending upon the size of the generator required and the location, they shall be fueled by diesel fuel or natural gas.
B. Emergency pump connections shall be installed.
C. If independent substations are used for emergency power, each separate substation and associated distribution lines shall be capable of starting and operating the pump station at its rated capacity.

2.09 PIPING, VALVES, AND PRESSURE GAUGE:

A. Pump Suction Lines:
1. One for each pump as indicated.
2. Shall be ductile-iron pipe.
3. Drilled and/or tapped as required to mate with lift station pump suction connections.

B. Pump Discharge Pipe, Fittings and Valves:
1. ____-inch minimum ductile-iron pipe forming a common discharge outlet.
2. Bronze fitted clapper type check and nonlubricated, eccentric plug valves installed in each pump discharge line.
    a. Installed above floor plate.
3. Check valves of the spring-loaded lever type so the clapper can be lifted to backflush the pump and suction line. Make shafts of stainless steel with nonlubricated packing glands.

4. Common discharge outlet with sleeved connection to station discharge pipe.
5. Steel pipe and piping fittings must coated and lined with paint system specified for corrosion protection herein.

C. Pressure Gauge:
1. Suitable for indicating the pumping head.
2. Mounted on the common discharge outlet pipe.
3. Threaded-ring type with stainless steel movement, hot forged Bourdon tube, forged steel or bronze socket as required, pointer with integral micrometer adjustment, dial with black numerals and graduations, covered with a clear plastic surface and case of bonderized aluminum alloy.
4. Equipped with a seal and snubber.
5. Installed complete with a brass stop valve between the gauge and the header.
6. Provide with iso ring mounting.
7. Ashcroft Figure No. 1379 "Duragauge" with a dial and scale in feet with a range of 0 to ___feet.

D. Penetrations through the floor shall be sealed gas tight at the factory.

2.10 VACUUM PRIMING SYSTEM:

A. Provide separate and independent system for each pump. Provide for each system:
1. Vacuum pump.
a. Corrosion resistant internal components.
b. Capable of priming pump and suction piping in 60 seconds under static suction lift conditions at the project site.
2. Vacuum control solenoid valve.
3. Prime level sensing probe.
4. Float operated check valve.
a. Installed ahead of vacuum pump.
b. Prevent liquid from entering vacuum pump.
c. Transparent body for visual inspection.
d. Automatically drain when vacuum pump shuts off.

B. Two (2) vacuum pumps shall be provided for each pump set. Each vacuum pump is required to be compatible with each pump set. Each vacuum pump must be capable of automatically and completely removing air from the suction lift pump.

C. Automatically provide positive lubrication of the sewage pump being primed on low pressure lubrication systems.

2.11 VENTILATING BLOWER AND ELECTRIC HEATER:

A. Ventilating Blower: (Below grade enclosure)
1. Capable of delivering 200 cfm in the enclosure.
a. Exhaust heat generated by continuous motor operation.
2. Rigidly mounted to the enclosure wall.
3. Discharge duct through the enclosure wall to atmosphere.
4. Squirrel-cage high-efficiency type.
5. Controlled by pre-set thermostat.

B. Ventilating Blower (Above Grade Enclosure):
1. Capable of delivering 200 cfm in the enclosure.
a. Exhaust heat generated by continuous motor operation.
2. Rigidly mounted to floor of enclosure.
3. Fitted with resilient gasket on discharge to mate with discharge in enclosure cover when it is closed.

4. Squirrel-cage, high-efficiency type.
5. Controlled by preset thermostat.

C. Electric Heater:
1. Rigidly mounted to floor of enclosure.
2. Controlled by preset thermostat.

2.12 REMOTE ALARM SYSTEM:

A. Frequency shift-tone transmitter in a NEMA 12 control cabinet inside lift station.
B. Auxiliary relays, limit switch and key-operated switch for intrusion alarm as indicated.
C. Hermetically-sealed DPDT plug-in relays equal to Magnecraft No. W88AHPX-24 with matching sockets.
D. All lift stations shall have telemetry cellular dialing systems.
1. Cellular dialing systems shall be OmniSite brand cellular radio supported by GUARDDOG.
2. Approved Models shall be Crystal Ball. No substitutions are allowed unless otherwise approved by the City.
E. Audio and visual indicators, with manual push button shut off (can be together) are required.
F. The alarm system must have an uninterrupted power source.
G. Required alarm systems:
1. High water alarm
2. Pump failure alarm
3. Low water shut off
4. Phase alarm
5. Loss of power
6. Motor tripped
7. Generator alarm
8. Other alarms will be based on project specific conditions.

2.13 WELDING:

A. Weld all structural steel members.
B. Electric arc welding with fillets of adequate section for the joint involved.
C. Continuous welds where required to exclude ground water or for structural reasons.
D. Inside and out where pipe or conduit inserts pass through the walls, bottom and top of horizontal plates.

2.14 CORROSION PROTECTION: After welding, protect all steel parts and as follows:

A. Blast with grit to a white color to remove rust, mill scale, weld slag, and dirt.
B. Remove by grinding, all weld splatter and surface roughness.
C. Give two coats minimum of 10 mils dry film thickness to all inside and outside surfaces of an amide cured epoxy resin.
1. Apply one coat 90 degrees to the preceding coat.
2. Vehicle to contain at least 85 percent epoxy resin and hardener with a minimum of thinner required for blowout purposes.
3. Pigment shall be comprised of only inert coloring and corrosion preventive materials.
4. No filler or extenders shall be used.
D. A touch-up kit shall be provided for repair of all scratches or mars occurring during installation.
E. Protect with two 17-pound packaged magnesium anodes for cathodic protection.
1. Buried on opposite sides of the chamber during installation.
2. Securely connected with No. 12 AWG Type TW insulated copper wire.
3. Attach wires to chamber wall with factory installed copper lugs.

4. Braze wires to anode core and seal with coal tar or hot pitch.

2.15 SUMP PUMP:

A. Submersible, closed coupled driven with vertical motor.
B. Installed in sump in station floor.
C. Fitted with mechanical seal.
D. Controlled automatically by float switch with a minimum 5-inch differential.
E. Rated at_____gph at design head.
F. Discharge to the wet well.

2.16 SPARE PARTS:

A. Two complete shaft mechanical seal assemblies with complete installation instructions.
B. One spare volute gasket for each sewage pump in the lift station.
C. Two sets of spare filters for seal water filter.
D. One spare float switch.
E. One operating wrench for the plug valves.
F. Minimum of three (3) hard copies of O & M manuals .
G. Digital O & M manual.
H. Ship in a single container, directly to the City of Republic with written confirmation of delivery to Contractor.
   1. Shipping address:
      City of Republic
      213 North Main Street
      Republic, MO 65738
      Attn: _____
      _____
   2. Note project reference on container as follows:
      SPARE PARTS:
      PROJECT: _____
      PROJECT NO. _____

2.17 WATER SUPPLY:

A. Per DNR Section 10 CSR 8.130 (3)(G), there shall be no physical connection between any potable water supply and a wastewater pumping station, which under any conditions, might cause contamination of the potable water supply. If a potable water supply is brought to the station, it shall comply with conditions stipulated under 10 CSR 20-8.140(7)(D).

PART 3 - EXECUTION

3.01 INSTALLATION:

A. Install in accordance with written instructions furnished by the manufacturer.
B. Place all fill concrete in wet well prior to installation of the lift station.
C. Place station on wet well as indicated:
   1. Seat in a layer of grout for uniform support and seal.
   2. Using lifting points provided by the manufacturer only.
D. Connect suction pipes after station has been permanently installed and discharge pipe connected.
E. Odor and Corrosion Control:
   1. Force main discharge manhole and five (5) manholes downstream of that point shall

receive a full depth hydrogen sulfide (H_2S) resistant liner. Liner shall be a hydrogen sulfide epoxy coating that is easily identifiable from a standard concrete manhole.

2. Project specific guidance shall be provided in the case where H_2S levels require alternative pipe materials (e.g. PVC or HDPE), special concrete admixtures, or specific H_2S treatment systems.

3.02 FIELD QUALITY CONTROL: Provide manufacturer's field services as specified in DIVISION 1.

END OF SECTION 333213

This page was intentionally left blank.

SECTION 333900 - UTILITY STRUCTURES

PART 1 - GENERAL

1.01 SUMMARY:

A. This Section includes the following structures and related appurtenances:
   1. Manholes.
   2. Accessory vault.
   3. Air valve vaults.
   4. Concrete anchor and thrust blocks.
   5. Flow meter structure.

B. Related Work Specified Elsewhere:
   1. Section 333150 – Pipe Installation.

C. Applicable Standards:
   1. American Society for Testing and Materials (ASTM):
      a. A48 - Gray Iron Castings.
      b. C32 - Sewer and Manhole Brick (Made from Clay or Shale).
      c. C76 - Reinforced Concrete Culvert, Storm Drain, and Sewer Pipe.
      d. C270 - Mortar for Unit Masonry.
      e. C443 - Joints for Circular Concrete Sewer and Culvert Pipe, Using Rubber Gaskets.
      f. C478 - Precast Reinforced Concrete Manhole Sections.
      g. C700 - Vitrified Clay Pipe, Extra Strength, Standard Strength, and Perforated.
   2. Federal Specification (FS):
      a. FF-H-106 - General Hardware, Builder's; Locks and Door Trim.
      b. SS-S-00210 - Sealing Compound, Preformed Plastic, for Expansion Joints and Pipe Joints.

PART 2 - PRODUCTS

2.01 MATERIALS:

A. Concrete: Reinforced, 4000 psi.

B. Mortar:
   1. Conform to ASTM C270 Type M.
   2. Type II portland cement, Type S lime.
   3. Proportion 1 part portland cement to 1/4 part lime to not less than 2-1/4 nor more than 3 times the sum of the cement and lime used of loose damp sand.

C. Castings:
   1. Steel reinforced polypropylene plastic or rubber, M.A. Industries Model PS2-PF, American Step Company Model ML, or equal as approved by Engineer. Manhole Frames and Covers:
      a. ASTM A48, Class 30B., pattern as specified for each structure under PART 3, this Section.
      b. Interchangeable within same pattern.
   2. Conform to Drawings in all essentials of design
   3. Machine-bearing surfaces to provide even seating.
   4. Coat with coal-tar pitch varnish.

SECTION 333900 - UTILITY STRUCTURES: continued

PART 3 - EXECUTION

3.01 MANHOLES:

A. Design:
1. Construct as follows:
a. Precast manhole with cast-in-place concrete base or precast concrete base:
(1) Precast manhole shall conform to ASTM C478.
(2) Provide Submittal for concrete manholes prior to installation.
b. Cast-in-place reinforced concrete manhole.
c. Conform to Drawings.
d. Provide Submittal for concrete manholes prior to installation.
e. Caulk and repair any leaks or remove entire Work and rebuild to obtain watertight construction.
f. Manhole steps will not be allowed in new manholes.
g. See Standard Detail #18 for Standard Manhole Detail.
h. See Standard Detail #19 for Standard Outside Drop Manhole Detail.
i. See Standard Detail #20 for Standard Inside Drop Manhole Detail.
j. When utilizing precast manholes, proposed drop connections must not enter the manhole at a joint.

B. Manhole Frames and Cover:
1. Frame should be set on RAMNEK as a sealant, then frame grouted around on adjustment ring.
2. See Standard Detail #10 for Manhole Frame and Cover Seal – Type A detail.
3. See Standard Detail #11 for Manhole Frame and Cover Seal – Type B detail.
4. See Standard Detail #12 for Manhole Frame and Cover Seal – Type C detail.

C. Connections:
1. Grout around pipes with nonmetallic non-shrink grout.
2. Install all piping using a flexible-rubber, entrance- hole gasket joint of pattern approved by the Engineer.
3. Make provisions for future connections where indicated.
4. Place pipe stub in manhole wall with bell or coupling outside manhole wall to provide flexible joint as indicated.
5. Include plug or stopper capable of withstanding 10 feet 4.3 psi of internal or external pressure without leakage for future connections.

D. Installation of manhole on existing sewer main:
1. Contractor shall meet necessary requirements:
a. Remove existing portion of sewer main
b. Stub lines in new manhole
c. Set new manhole with new line sections in place
d. Make connection with HYMAX style coupling

E. Invert Channels:
1. Form invert channel with 4,000 psi Type II portland cement concrete.
2. Make changes in direction of flow with smooth curves of as large a radius as size of manhole permits.
3. Make changes in size and grade smoothly and uniformly.
4. Slope floor of manhole adjacent to channels as indicated.
5. Finish channel bottom smoothly without roughness, irregularity, or pockets.

F. Waterproofing:
1. Apply coal-tar coating to exterior walls on all manholes from base to finish grade:

a. Carboline - Bitumastic 300M.
b. International - Intertuf 100.
c. Tnemec - HB Tnemecol 46-465.

2. Apply coating in two coats to minimum 12-mil dry-film thickness per coat.
3. Mac Wrap all manhole structures per ASTM C877 (Type II) requirements.

3.02 ACCESSORY VAULT:

A. Design: Construct to conform to Drawings of reinforced concrete pipe conforming to ASTM C76, Class II or clay pipe conforming to ASTM C700.
B. Installation:
1. Install vaults where indicated.
2. Notch lower section 2 inches greater than pipe od and include fiberglass batt to prevent transmission of loads to pipe barrel.
C. Manhole Frame and Cover:
1. Set frame level and to grade in mortar.

3.03 AIR VALVE VAULT:

A. Design:
1. Precast and masonry construction as indicated.
2. Precast concrete footings.
3. Riser of ASTM C76, Class II pipe.
4. Top slab shall be precast as indicated.
B. Installation:
1. Install within 8 feet of station indicated.
2. Include fiberglass batt to prevent transmission of loads to pipe barrel.
3. Interior of concrete vault shall have epoxy coating or similar engineer-approved equal, to resist hydrogen sulfide.
4. All fittings and hardware shall be stainless steel.
5. Provide three courses of brick between top slab and manhole frame:
a. Lay in mortar.
b. Remove surplus mortar from inside joints and tool.
C. Manhole Frame and Cover:
1. Set frame level and to grade in full bed of mortar.
D. Insulation Fill:
1. Insulate all air-valve vaults. Insulate inside of vault around piping and air valve to prevent freezing.
2. Use water-repellent granular form of vermiculite known as masonry fill insulation.
3. Fill to depth to cover top of air valve. Do not block air valve's vent-piping outlet.
4. Install by pouring; do not rod or tamp.

3.04 CONCRETE ANCHOR AND THRUST BLOCKS:

A. Install at tees, elbows, bends, and dead ends where indicated.
B. Place against undisturbed earth or rock.
C. Of design indicated or specified:
1. Bearing surface area may be adjusted should field conditions be in variance with design assumption:
a. May be increased with compensation therefore conforming to adjusted Unit Prices.
b. May be reduced in rock trench as approved.
2. Removable thrust blocks shall be constructed by using a sheet of 3/8-inch plywood to

prevent concrete adherence to pipe, fittings, or accessories.

3. Apply two coats of coal-tar coating to minimum 20-mil dry-film thickness on anchor bars, straps, and hardware.

3.05 FLOW METER STRUCTURE:

A. Construct of reinforced concrete as indicated.

B. Furnish and install hollow metal door and frame complete with hardware:

1. Frame:
   a. Rough buck shall be 12-gage steel provided with holes for anchor bolts approximately 24 inches o.c., floor clip, and removable spreader.
   b. Jamb shall be 16-gage, 1-piece rust-resistant steel with intersections mitered, welded, and ground smooth.
   c. Rabbet properly for doors.
   d. Fasten jamb to rough buck with countersunk oval-head machine screws.
2. Door:
   a. Full flush type, 1-3/4-inch thickness.
   b. Construct of two outer sheets of 18-gage steel.
   c. Reinforce inside with 20-gage stiffeners spaced a maximum of 6 inches o.c. and horizontal steel channels top and bottom spot-welded to face. Channels shall be flush with top and bottom of door.
   d. Continuously arc-weld vertically where outer sheets are jointed, and dress smooth with no exposed seams.
   e. Sound-deaden with manufacturer's standard insulation.
3. Hardware:
   a. Reinforce door and frame properly for hardware with minimum of 14-gage steel.
   b. Furnish and install the following:
      (1) 1-1/2 pair butts 4-1/2 x 4-1/2, 2 ball-bearing steel, US 26D.
      (2) 1 entrance lock FS FF-H-00106 Series 161-A, US 26D.
      (3) 1 threshold 4" width x 13 mm 1/2" high, corrugated aluminum.
      (4) Chain and snap on inside face of door.
4. Finish: Door and frame shall be cleaned, bonderized, and given one coat of baked-on rust-inhibitive primer and two coats of baked-on gray exterior enamel.

C. Pit Hatch:

1. Single-leaf gutter type with 1/4-inch checkered plate cover, designed to withstand loading of 300 psf, aluminum construction, with automatic hold-open arm, 1-1/2-inch diameter drainage coupling, inside snap lock and removable wrench-lift handle on outside, Babcock-Davis Associates, Inc., Type AM222A.
2. Coat surfaces of aluminum frame to be embedded in concrete with bitumastic material.

D. Handrail:

1. Furnish and install nominal 1-1/2 in id aluminum handrail as detailed.
2. Provide hold-open provisions for hatch and door as indicated.

END OF SECTION 333900

This page was intentionally left blank.

SECTION 347000 – CONCRETE

PART 1 – GENERAL

1.01 RELATED DOCUMENTS:

A. Drawings and General Provisions of the Contract, including General and Supplementary Conditions and Division 01 Specification Sections, apply to this Section.

1.02 SUMMARY:

A. This section includes concrete and related items.

1.03 REFERENCES:

A. Applicable Standards (Latest Edition):
   1. American Concrete Institute (ACI):
      a. ACI 117 - Specifications for Tolerances for Concrete Construction and Materials and Commentary
      b. ACI 121R - Guide for Concrete Construction Quality Systems in Conformance with ISO 9001
      c. ACI 213R - Guide for Structural Lightweight-Aggregate Concrete
      d. ACI 301 - Specifications for Structural Concrete
      e. ACI 302.1R - Guide for Concrete Floor and Slab Construction
      f. ACI 304.2R - Guide to Placing Concrete by Pumping Methods
      g. ACI 304R - Guide for Measuring, Mixing, Transporting, and Placing Concrete
      h. ACI 305.1 - Specification for Hot Weather Concreting
      i. ACI 305R - Guide to Hot Weather Concreting
      j. ACI 306.1 - Standard Specification for Cold Weather Concreting
      k. ACI 306R - Guide to Cold Weather Concreting
      l. ACI 308.1 - Specification for Curing Concrete
      m. ACI 318 – Building Code Requirements for Structural Concrete and PCA Notes
      n. ACI 347R - Guide to Formwork for Concrete
      o. ACI SP-2 - ACI Manual of Concrete Inspection
      p. ACI SP-15 - Field Reference Manual: Standard Specifications for Structural Concrete ACI 301-05 with Selected ACI References
   2. American Welding Society (AWS):
      a. AWS D1.4 - Structural Welding Code - Reinforcing Steel
   3. ASTM International (ASTM):
      a. ASTM A36 - Standard Specification for Carbon Structural Steel
      b. ASTM A53 - Standard Specification for Pipe, Steel, Black and Hot-Dipped, Zinc-Coated, Welded and Seamless
      c. ASTM A184 - Standard Specification for Welded Deformed Steel Bar Mats for Concrete Reinforcement
      d. ASTM A615 - Standard Specification for Deformed and Plain Carbon-Steel Bars for Concrete Reinforcement
      e. ASTM A706 - Standard Specification for Low-Alloy Steel Deformed and Plain Bars for Concrete Reinforcement
      f. ASTM A767 - Standard Specification for Zinc-Coated (Galvanized) Steel Bars for Concrete Reinforcement
      g. ASTM A775 - Standard Specification for Epoxy-Coated Steel Reinforcing Bars
      h. ASTM A780 - Standard Practice for Repair of Damaged and Uncoated Areas of Hot-Dip Galvanized Coatings

SECTION 347000 – CONCRETE: continued

i. ASTM A820 - Standard Specification for Steel Fibers for Fiber-Reinforced Concrete
j. ASTM A884 - Standard Specification for Epoxy-Coated Steel Wire and Welded Wire Reinforcement
k. ASTM A934 - Standard Specification for Epoxy-Coated Prefabricated Steel Reinforcing Bars
l. ASTM A955 - Standard Specification for Deformed and Plain Stainless-Steel Bars for Concrete Reinforcement
m. ASTM A970 - Standard Specification for Headed Steel Bars for Concrete Reinforcement
n. ASTM A1022 - Standard Specification for Deformed and Plain Stainless-Steel Wire and Welded Wire for Concrete Reinforcement
o. ASTM A1044 - Standard Specification for Steel Stud Assemblies for Shear Reinforcement of Concrete
p. ASTM A1055 - Standard Specification for Zinc and Epoxy Dual Coated Steel Reinforcing Bars
q. ASTM A1060 - Standard Specification for Zinc-Coated (Galvanized) Steel Welded Wire Reinforcement, Plain and Deformed, for Concrete
r. ASTM A1064 - Standard Specification for Carbon-Steel Wire and Welded Wire Reinforcement, Plain and Deformed, for Concrete
s. ASTM C31 - Standard Practice for Making and Curing Concrete Test Specimens in the Field
t. ASTM C33 - Standard Specification for Concrete Aggregates
u. ASTM C39 - Standard Test Method for Compressive Strength of Cylindrical Concrete Specimens
v. ASTM C42 - Standard Test Method for Obtaining and Testing Drilled Cores and Sawed Beams of Concrete
w. ASTM C78 - Standard Test Method for Flexural Strength of Concrete (Using Simple Beam with Third-Point Loading)
x. ASTM C94 - Standard Specification for Ready-Mixed Concrete
y. ASTM C136 - Standard Test Method for Sieve Analysis of Fine and Coarse Aggregates
z. ASTM C138 - Standard Test Method for Density (Unit Weight), Yield, and Air Content (Gravimetric) of Concrete
aa. ASTM C143 - Standard Test Method for Slump of Hydraulic-Cement Concrete
bb. ASTM C150 - Standard Specification for Portland Cement
cc. ASTM C172 - Standard Practice for Sampling Freshly Mixed Concrete
dd. ASTM C173 - Standard Test Method for Air Content of Freshly Mixed Concrete by the Volumetric Method
ee. ASTM C231 - Standard Test Method for Air Content of Freshly Mixed Concrete by the Pressure Method
ff. ASTM C260 - Standard Specification for Air-Entraining Admixtures for Concrete
gg. ASTM C311 - Standard Test Methods for Sampling and Testing Fly Ash or Natural Pozzolans for Use in Portland-Cement Concrete
hh. ASTM C330 - Standard Specification for Lightweight Aggregates for Structural Concrete
ii. ASTM C494 - Standard Specification for Chemical Admixtures for Concrete
jj. ASTM C567 - Determining Density of Structural Lightweight Concrete
kk. ASTM C595 - Standard Specification for Blended Hydraulic Cements
ll. ASTM C618 - Standard Specification for Coal Fly Ash and Raw or Calcined Natural Pozzolan for Use in Concrete

SECTION 347000 – CONCRETE: continued

mm. ASTM C803 - Standard Test Method for Penetration Resistance of Hardened Concrete
nn. ASTM C845 - Standard Specification for Expansive Hydraulic Cement
oo. ASTM C873 - Standard Test Method for Compressive Strength of Concrete Cylinders Cast in Place in Cylindrical Molds
pp. ASTM C900 - Standard Test Method for Pullout Strength of Hardened Concrete
qq. ASTM C920 - Standard Specification for Elastomeric Joint Sealants
rr. ASTM C989 - Standard Specification for Slag Cement for Use in Concrete and Mortars
ss. ASTM C1012 - Standard Test Method for Length Change of Hydraulic-Cement Mortars Exposed to a Sulfate Solution
tt. ASTM C1017 - Standard Specification for Chemical Admixtures for Use in Producing Flowing Concrete
uu. ASTM C1074 - Standard Practice for Estimating Concrete Strength by the Maturity Method
vv. ASTM C1077 - Standard Practice for Agencies Testing Concrete and Concrete Aggregates for Use in Construction and Criteria for Testing Agency Evaluation
ww. ASTM C1107 - Standard Specification for Packaged Dry, Hydraulic-Cement Grout (Nonshrink)
xx. ASTM C1116 - Standard Specification for Fiber-Reinforced Concrete
yy. ASTM C1157 - Standard Performance Specification for Hydraulic Cement
zz. ASTM C1218 - Standard Test Method for Water-Soluble Chloride in Mortar and Concrete
aaa. ASTM C1240 - Standard Specification for Silica Fume Used in Cementitious Mixtures
bbb. ASTM C1260 - Standard Test Method for Potential Alkali Reactivity of Aggregates (Mortar-Bar Method)
ccc. ASTM C1293 - Standard Test Method for Determination of Length Change of Concrete Due to Alkali-Silica Reaction
ddd. ASTM C1567 - Standard Test Method for Potential Alkali-Silica Reactivity of Combinations of Cementitious Materials and Aggregate (Accelerated Mortar-Bar Method)
eee. ASTM C1602 - Standard Specification for Mixing Water Used in Production of Hydraulic Cement Concrete
fff. ASTM C1778 - Standard Guide for Reducing the Risk of Deleterious Alkali-Aggregate Reaction in Concrete
ggg. ASTM D412 - Standard Test Methods for Vulcanized Rubber and Thermoplastic Elastomers – Tension
hhh. ASTM D471 - Standard Test Method for Rubber Property - Effect of Liquids
iii. ASTM D1751 - Standard Specification for Preformed Expansion Joint Filler for Concrete Paving and Structural Construction (Nonextruding and Resilient Bituminous Types)
jjj. ASTM D1752 - Standard Specification for Preformed Sponge Rubber, Cork and Recycled PVC Expansion Joint Fillers for Concrete Paving and Structural Construction
kkk. ASTM D2628 - Standard Specification for Preformed Polychloroprene Elastomeric Joint Seals for Concrete Pavements
lll. ASTM D2835 - Standard Specification for Lubricant for Installation of Preformed Compression Seals in Concrete Pavements
mmm. ASTM D3042 - Standard Test Method for Insoluble Residue in Carbonate Aggregates

nnn. ASTM D5759 - Characterization of Coal Fly Ash and Clean Coal Combustion Fly Ash for Potential Uses
ooo. ASTM D6690 - Standard Specification for Joint and Crack Sealants, Hot Applied, for Concrete and Asphalt Pavements
ppp. ASTM E96 - Standard Test Methods for Water Vapor Transmission of Materials
qqq. ASTM E329 - Standard Specification for Agencies Engaged in Construction Inspection, Testing, or Special Inspection
rrr. ASTM E1155 - Standard Test Method for Determining Floor Flatness and Floor Levelness Numbers
sss. ASTM E1643 - Standard Practice for Selection, Design, Installation, and Inspection of Water Vapor Retarders Used in Contact with Earth or Granular Fill Under Concrete Slabs
ttt. ASTM E1745 - Standard Specification for Water Vapor Retarders Used in Contact with Soil or Granular Fill under Concrete Slabs
uuu. ASTM E1993 - Standard Specification for Bituminous Water Vapor Retarders Used in Contact with Soil or Granular Fill Under Concrete Slabs

4. Concrete Reinforcing Steel Institute (CRSI):
   a. CRSI 10MSP - Manual of Standard Practice
   b. CRSI RB4.1 - Supports for Reinforcement Used in Concrete

1.04 DEFINITIONS:

A. CEMENTITIOUS MATERIAL: As used herein must include all portland cement, pozzolan, fly ash, slag cement, and silica fume.
B. EXPOSED TO PUBLIC VIEW: Means situated so that it can be seen from eye level from a public location after completion of the building. A public location is accessible to persons not responsible for operation or maintenance of the building.
C. CHEMICAL ADMIXTURES: Materials in the form of powder or fluids that are added to the concrete to give it certain characteristics not obtainable with plain concrete mixes.
D. SUPPLEMENTARY CEMENTING MATERIALS (SCM): Inclusive of coal fly ash, silica fume, slag cement, natural or calcined pozzolans, and ultra-fine coal ash when used in such proportions to replace the portland cement that result in improvement to sustainability and durability and reduced cost.
E. DESIGN STRENGTH, f'c: Specified compressive strength of concrete at time(s) specified in this section to meet structural design criteria.
F. MASS CONCRETE: Any concrete system that approaches a maximum temperature of 158 degrees F within the first 72 hours of placement. In addition, it includes all concrete elements with a section thickness of 3 feet or more regardless of temperature.
G. MIXTURE PROPORTIONING: The process of designing concrete mixture proportions to enable it to meet the strength, service life and constructability requirements of the project while minimizing the initial and life-cycle cost.
H. MIXTURE PROPORTIONS: The masses or volumes of individual ingredients used to make a unit measure (cubic meter or cubic yard) of concrete.
I. POZZOLAN: A siliceous or siliceous and aluminous material, which in itself possesses little or no cementitious value but will, in finely divided form and in the presence of moisture, chemically react with calcium hydroxide at ordinary temperatures to form compounds possessing cementitious properties.
J. WORKABILITY (or consistence): The ability of a fresh (plastic) concrete mix to fill the form/mould properly with the desired work (vibration) and without reducing the concrete's quality. Workability depends on water content, chemical admixtures, aggregate (shape and size distribution), cementitious content and age (level of hydration).

SECTION 347000 – CONCRETE: continued

1.05 INFORMATIONAL SUBMITTALS:

A. General: Submit each item in this Article according to the Conditions of the Contract and as specified here.

B. Include, but not limited to, product data and shop drawings for the following:

1. Product Data:
   a. Joint Sealants
   b. Joint Filler
   c. Formwork Materials
   d. Recycled Aggregate Materials
   e. Cementitious Materials
   f. Vapor Retarder and Vapor Barrier
   g. Concrete Curing Materials
   h. Reinforcement
   i. Liquid Chemical Floor Hardeners and Sealers
   j. Admixtures
   k. Reinforcing Fibers
   l. Mechanical Reinforcing Bar Connectors
   m. Waterstops
   n. Local/Regional Materials; (LEED NC)
   o. Nonshrink Grout
2. Design Data:
   a. Concrete Mix Design
3. Test Reports:
   a. Concrete Mix Design
   b. Fly Ash
   c. Pozzolan
   d. Slag Cement
   e. Aggregates
   f. Compressive Strength Tests
   g. Unit Weight of Structural Concrete
   h. Air Content
   i. Slump Tests
   j. Water
4. Certificates
   a. Reinforcing Bars
   b. Field Testing Technician and Testing Agency

1.06 DELIVERY, STORAGE, AND HANDLING

A. General: Follow ACI 301, ACI 304R and ASTM A934 requirements and recommendations. Do not deliver concrete until vapor retarder, vapor barrier, forms, reinforcement, embedded items, and chamfer strips are in place and ready for concrete placement. Do not store concrete curing compounds or sealers with materials that have a high capacity to adsorb volatile organic compound (VOC) emissions. Do not store concrete curing compounds or sealers in occupied spaces.

B. Materials:

1. Reinforcement:
   a. Store reinforcement of different sizes and shapes in separate piles or racks raised above the ground to avoid excessive rusting. Protect from contaminants such as grease, oil, and dirt. Ensure bar sizes can be accurately identified after bundles are broken and tags removed.

SECTION 347000 – CONCRETE: continued

1.07 QUALITY ASSURANCE

A. Design Data:
   1. Concrete Mix Design:
      a. Sixty days minimum prior to concrete placement, submit a mix design for each strength and type of concrete. Submit a complete list of materials including type; brand; source and amount of cement, supplementary cementitious materials, and admixtures; and applicable reference specifications.
      b. Submit mill test and all other test for cement, supplementary cementitious materials, aggregates, and admixtures.
      c. Provide documentation of maximum nominal aggregate size, gradation analysis, percentage retained and passing sieve, and a graph of percentage retained verses sieve size.
      d. Provide mix proportion data for each type of mixture, which produce a range of strength encompassing those required for each type of concrete required. If source material changes, resubmit mix proportion data using revised source material. Indicate clearly in the submittal where each mix design is used when more than one mix design is submitted. Resubmit data on concrete components if the qualities or source of components changes. For previously approved concrete mix designs used within the past twelve months, the previous mix design may be re-submitted without further trial batch testing if accompanied by material test data conducted within the last six months. Obtain mix design approval from the Design Engineer prior to concrete placement.

B. Test Reports:
   1. Fly Ash and Pozzolan
      a. Submit test results in accordance with ASTM C618 for fly ash and pozzolan. Submit test results performed within 6 months of submittal date.
   2. Slag Cement
      a. Submit test results in accordance with ASTM C989 for slag cement. Submit test results performed within 6 months of submittal date.
   3. Aggregates
      a. Submit test results in accordance with ASTM C33, or ASTM C330 for lightweight aggregate, and ASTM C1293 or ASTM C1567 as required in the paragraph titled ALKALI-AGGREGATE REACTION.
   4. Fiber-Reinforced Concrete
      a. Test to determine flexural toughness index I5 in accordance with ASTM C1116.

C. Quality Control Plan:
   1. Develop and submit for approval a concrete quality control program in accordance with the guidelines of ACI 121R and as specified herein. The plan must include approved laboratories. Provide direct oversight for the concrete qualification program inclusive of associated sampling and testing. All quality control reports must be provided to the City, Quality Manager and Concrete Supplier. Maintain a copy of ACI SP-15 and CRSI 10MSP at project site.

D. Quality Control Personnel Certifications
   1. The Contractor must submit for approval the responsibilities of the various quality control personnel, including the names and qualifications of the individuals in those positions and a quality control organizational chart defining the quality control hierarchy and the responsibility of the various positions. Quality control personnel must be employed by the Contractor.
   2. Submit American Concrete Institute certification for the following:
      a. CQC personnel responsible for inspection of concrete operations.

b. Lead Foreman or Journeyman of the Concrete Placing, Finishing, and Curing Crews.
c. Field Testing Technicians: ACI Concrete Field Testing Technician, Grade I.

3. Quality Manager Qualifications:
   a. The quality manager must hold a current license as a professional engineer in a U.S. state or territory with experience on at least five similar projects. Evidence of extraordinary proven experience may be considered by the City as sufficient to act as the Quality Manager.
4. Field Testing Technician and Testing Agency:
   a. Submit data on qualifications of proposed testing agency and technicians for approval by the City prior to performing testing on concrete.
   b. Work on concrete under this contract must be performed by an ACI Concrete Field Testing Technician Grade 1 qualified in accordance with ACI SP-2 or equivalent. Equivalent certification programs must include requirements for written and performance examinations as stipulated in ACI SP-2.
   c. Testing agencies that perform testing services on reinforcing steel must meet the requirements of ASTM E329.
   d. Testing agencies that perform testing services on concrete materials must meet the requirements of ASTM C1077.
5. Laboratory Qualifications for Concrete Qualification Testing
   a. The concrete testing laboratory must have the necessary equipment and experience to accomplish required testing. The laboratory must meet the requirements of ASTM C1077 and be Cement and Concrete Reference Laboratory (CCRL) inspected.
6. Laboratory Accreditation
   a. Laboratory and testing facilities must be provided by and at the expense of the Contractor. The laboratories performing the tests must be accredited in accordance with ASTM C1077, including ASTM C78 and ASTM C1260. The accreditation must be current and must include the required test methods, as specified. Furthermore, the testing must comply with the following requirements:
   b. Aggregate Testing and Mix Proportioning: Aggregate testing and mixture proportioning studies must be performed by an accredited laboratory and under the direction of a registered professional engineer in a U.S. state or territory competent in concrete materials and must sign all reports and designs.
   c. Acceptance Testing: Furnish all materials, labor, and facilities required for molding, curing, testing, and protecting test specimens at the site and in the laboratory. Furnish and maintain boxes or other facilities suitable for storing and curing the specimens at the site while in the mold within the temperature range stipulated by ASTM C31.
   d. Contractor Quality Control: All sampling and testing must be performed by an approved, onsite, independent, accredited laboratory.

PART 2 – PRODUCTS

2.01 FORMWORK MATERIALS

A. General:
   1. Form-facing material in contact with concrete must be lumber, plywood, tempered concrete-form-grade hardboard, metal, or plastic. Submit product information on proposed form-facing materials if different from that specified herein.

2. Design formwork, shores, reshores, and backshores to support loads transmitted to them and to comply with applicable building code requirements.
3. Design formwork and shoring for load redistribution resulting from stressing of post-tensioned reinforcement. Ensure that formwork allows movement resulting from application of prestressing force.
4. Design formwork to withstand pressure resulting from placement and vibration of concrete and to maintain specified tolerances.
5. Design formwork to accommodate waterstop materials in joints at locations indicated in Contract Documents.
6. Provide temporary openings in formwork if needed to facilitate cleaning and inspection.
7. Design formwork joints to inhibit leakage of mortar.
8. Limit deflection of facing materials for concrete surfaces exposed to view to 1/240 of center-to-center spacing of facing supports.
9. Do not use earth cuts as forms for vertical or sloping surfaces.
10. Submit product information on proposed form-facing materials if different from that specified herein.
11. Submit shop drawings for formwork, shoring, reshoring, and backshoring. Shop drawings must be signed and sealed by a licensed design engineer.
12. Submit design calculations for formwork, shoring, reshoring, and backshoring. Design calculations must be signed and sealed by a licensed design engineer.
13. Submit procedure for reshoring and backshoring, including drawings signed and sealed by a licensed design engineer. Include on shop drawings the formwork removal procedure and magnitude of construction loads used for design of reshoring or backshoring system. Indicate in procedure the magnitude of live and dead loads assumed for required capacity of the structure at time of reshoring or backshoring.
14. Submit manufacturer's product data on form liner proposed for use with each formed surface.

E. Wood Forms
1. Use lumber as follows. Provide lumber that is square edged or tongue-and-groove boards, free of raised grain, knotholes, or other surface defects. Provide plywood that complies with NIST PS 1, B-B concrete form panels or better or AHA A135.4, hardboard for smooth form lining.

F. Steel Forms
1. Provide steel form surfaces that do not contain irregularities, dents, or sags.

2.02 FORMWORK ACCESSORIES

A. General:
1. Use commercially manufactured formwork accessories, including ties and hangers.
2. Form ties and accessories must not reduce the effective cover of the reinforcement.

B. Accessories:
1. Form Ties
   a. Use form ties with ends or end fasteners that can be removed without damage to concrete.
   b. Where indicated in Contract Documents, use form ties with integral water barrier plates or other acceptable positive water barriers in walls.
   c. The breakback distance for ferrous ties must be at least 2 in. for Surface Finish-2.0 or Surface Finish-3.0, as defined in ACI 301.
   d. If the breakback distance is less than 3/4 in., use coated or corrosion-resistant ties.
   e. Submit manufacturer's data sheet on form ties.
2. Waterstops

a. Submit manufacturer's data sheet on waterstop materials and splices.
b. PVC Waterstop
    1) Polyvinylchloride waterstops must conform to COE CRD-C 572.
b. Rubber Waterstop
    1) Rubber waterstops must conform to COE CRD-C 513.
a. Thermoplastic Elastomeric Rubber Waterstop
    1) Thermoplastic elastomeric rubber waterstops must conform to ASTM D471.
a. Hydrophilic Waterstop
    1) Swellable strip type compound of polymer modified chloroprene rubber that swells upon contact with water must conform to the following requirements when tested in accordance to ASTM D412: Tensile strength 420 psi minimum; ultimate elongation 600 percent minimum. Hardness must be 50 minimum on the type A durometer and the volumetric expansion ratio in distilled water at 70 degrees F must be 3 to 1 minimum.

3. Biodegradable Form Release Agent
    a. Provide form release agent that is colorless, biodegradable.
    b. Provide product that does not bond with, stain, or adversely affect concrete surfaces and does not impair subsequent treatments of concrete surfaces.
    c. Provide form release agent that reduces formwork moisture absorption, and does not contain diesel fuel, petroleum-based lubricating oils, waxes, or kerosene. Submit documentation indicating type of biobased material in product and biobased content. Indicate relative dollar value of biobased content products to total dollar value of products included in project.
    d. Submit manufacturer's product data on formwork release agent for use on each form-facing material.
4. Chamfer Materials
    a. Use lumber materials with dimensions of 3/4 x 3/4 in.
5. Construction and movement joints
    a. Submit details and locations of construction joints in accordance with the requirements herein.
    b. Locate construction joints within middle one-third of spans of slabs, beams, and girders. If a beam intersects a girder within the middle one-third of girder span, the distance between the construction joint in the girder and the edge of the beam must be at least twice the width of the larger member.
    c. For members with post-tensioning tendons, locate construction joints where tendons pass through centroid of concrete section.
    d. Locate construction joints in walls and columns at underside of slabs, beams, or girders and at tops of footings or slabs.
    e. Make construction joints perpendicular to main reinforcement.
    f. Provide movement joints where indicated in Contract Documents or in accepted alternate locations.
    g. Submit location and detail of movement joints if different from those indicated in Contract Documents.
    h. Submit manufacturer's data sheet on expansion joint materials.
    i. Provide keyways where indicated in Contract Documents. Longitudinal keyways indicated in Contract Documents must be at least 1-1/2 in. deep, measured perpendicular to the plane of the joint.
6. Other Embedded items
    a. Use sleeves, inserts, anchors, and other embedded items of material and design indicated in Contract Documents.

SECTION 347000 – CONCRETE: continued

2.03 CONCRETE MATERIALS

A. Cementitious Materials
   1. Portland Cement
      a. Unless otherwise specified, provide cement that conforms to ASTM C150 Type I, II, II(MH), III, IV, V with the approval of a Registered Engineer for its intended use.
      b. Use one brand and type of cement for formed concrete having exposed-to-view finished surfaces.
      c. Submit information along with evidence demonstrating compliance with referenced standards. Submittals must include types of cementitious materials, manufacturing locations, shipping locations, and certificates showing compliance.
      d. Cementitious materials must be stored and kept dry and free from contaminants.
   2. Fly Ash
      a. ASTM C618, Class F, except that the maximum allowable loss on ignition must not exceed 3 percent, unless specified otherwise by Engineer.
      b. If fly ash is used it shall range from 15 to 20 percent by weight of cementitious material, provided the fly ash does not reduce the amount of cement in the concrete mix below the minimum requirements of local building codes. Where the use of fly ash cannot meet the minimum level, it shall not be used. Report the chemical analysis of the fly ash in accordance with ASTM C311. Evaluate and classify fly ash in accordance with ASTM D5759.
   3. Slag Cement
      a. ASTM C989, Grade 100 or 120.
   4. Silica Fume
      a. Silica fume must conform to ASTM C1240, including the optional limits on reactivity with cement alkalis. Silica fume may be furnished as a dry, densified material or as slurry. Proper mixing is essential to accomplish proper distribution of the silica fume and avoid agglomerated silica fume which can react with the alkali in the cement resulting in premature and extensive concrete damage. Supervision at the batch plant, finishing, and curing is essential. Provide at the Contractor's expense the services of a manufacturer's technical representative, experienced in mixing, proportioning, placement procedures, and curing of concrete containing silica fume. This representative must be present on the project prior to and during at least the first 4 days of concrete production and placement using silica fume. A High Range Water Reducing admixture (HRWRA) must be used with silica fume.
   5. Other Supplementary Cementitious Materials
      a. Natural pozzolan must be raw or calcined and conform to ASTM C618, Class N, including the optional requirement for uniformity.
      b. Ultra Fine Fly Ash (UFFA) and Ultra Fine Pozzolan (UFP) must conform to ASTM C618, Class F or N, and the following additional requirements:
         1) The strength activity index at 28 days of age must be at least 95 percent of the control specimens.
         2) The average particle size must not exceed 6 microns.
         3) The sum of $SiO_2 + Al_2O_3 + Fe_2O_3$ must be greater than 77 percent.

B. Water
   1. Water or ice must comply with the requirements of ASTM C1602.
   2. Minimize the amount of water in the mix. Improve workability by adjusting the grading of the aggregate and using admixture rather than by adding water.
   3. Water must be potable; free from injurious amounts of oils, acids, alkalis, salts, organic materials, or other substances deleterious to concrete.
   4. Protect mixing water and ice from contamination during storage and delivery.

5. Submit test report showing water complies with ASTM C1602.

C. Aggregate
   1. Normal-Weight Aggregate
      a. Aggregates must conform to ASTM C33 unless otherwise specified in the Contract Documents or approved by the City and Design Engineer.
      b. Aggregates used in concrete must be obtained from the same sources and have the same size range as aggregates used in concrete represented by submitted field test records or used in trial mixtures.
      c. Store and handle aggregate in a manner that will avoid segregation and prevents contamination by other materials or other sizes of aggregates. Store aggregates in locations that will permit them to drain freely. Do not use aggregates that contain frozen lumps.
      d. Submit types, pit or quarry locations, producers' names, aggregate supplier statement of compliance with ASTM C33, and ASTM C1293 expansion data not more than 18 months old.
   2. Lightweight Aggregate
      a. Lightweight aggregate in accordance with ASTM C330.

D. Admixtures
   1. Chemical admixtures must conform to ASTM C494.
   2. Air-entraining admixtures must conform to ASTM C260.
   3. Chemical admixtures for use in producing flowing concrete must conform to ASTM C1017.
   4. Do not use calcium chloride admixtures, unless approved by a Registered Engineer for it's intended use.
   5. Use a corrosion-inhibiting admixture for concrete classified under exposure category C1 or C2 when recommended for it's intended use by a Registered Engineer.
   6. Admixtures used in concrete must be the same as those used in the concrete represented by submitted field test records or used in trial mixtures.
   7. Protect stored admixtures against contamination, evaporation, or damage.
   8. To ensure uniform distribution of constituents, provide agitating equipment for admixtures used in the form of suspensions or unstable solutions. Protect liquid admixtures from freezing and from temperature changes that would adversely affect their characteristics.
   9. Submit types, brand names, producers' names, manufacturer's technical data sheets, and certificates showing compliance with standards required herein.

2.04 MISCELLANEOUS MATERIALS

A. Concrete Curing Materials
   1. Provide concrete curing material in accordance with ACI 301 Section 5 and ACI 308.1 Section 2. Submit product data for concrete curing compounds. Submit manufacturer's instructions for placement of curing compound.

B. Nonshrink Grout
   1. Nonshrink grout in accordance with ASTM C1107.

C. Floor Finish Materials
   1. Liquid Chemical Floor Hardeners and Sealers
      a. Hardener must be a colorless aqueous solution containing a blend of inorganic silicate or siliconate material and proprietary components combined with a wetting agent; that penetrates, hardens, and densifies concrete surfaces. Submit manufactures instructions for placement of liquid chemical floor hardener.

b. Use concrete penetrating sealers with a low (maximum 100 grams/liter, less water and less exempt compounds) VOC content. Submit manufactures instructions for placement of sealers.

D. Expansion/Contraction Joint Filler
1. ASTM D1751 or ASTM D1752 Type I or Type II. Material must be 1/2 inch thick, unless otherwise indicated].

E. Joint Sealants
1. Submit manufacturer's product data, indicating VOC content.
a. Horizontal Surfaces, 3 Percent Slope, Maximum
1) ASTM D6690 or ASTM C920, Type M, Class 25, Use T.
b. Vertical Surfaces Greater Than 3 Percent Slope
1) ASTM C920, Type M, Grade NS, Class 25, Use T, NT. or FS SS-S-200, no sag.
c. Preformed Polychloroprene Elastomeric Type
1) ASTM D2628.
d. Lubricant for Preformed Compression Seals
1) ASTM D2835.

F. Vapor Barrier
1. ASTM E1745 Class C polyethylene sheeting, minimum 10 mil (Residential) or 15 mil (Commercial) thickness or other equivalent material with a maximum permeance rating of 0.04 perms per ASTM E96; ASTM E1745 Class C or B polyethylene sheeting, minimum 15 mil thickness or ASTM E1993 bituminous membrane or other equivalent material with a maximum permeance rating of 0.01 perms per ASTM E96, or unless otherwise approved.

G. Dovetail Anchor Slot
1. Preformed metal slot approximately 1 inch by 1 inch of not less than 22 gage galvanized steel cast in concrete. Coordinate actual size and throat opening with dovetail anchors and provide with removable filler material.

2.05 CONCRETE MIX DESIGN

A. Properties and Requirements
1. Use materials and material combinations listed in this section and the contract documents.
2. Cementitious material content must be adequate for concrete to satisfy the specified requirements for strength, w/cm, durability, and finishability described in this section and the contract documents.
3. The minimum cementitious material content for concrete used in floors must meet the following requirements:

SIEVE	PERCENT PASSING
3/8 in.	100
No. 4	95 to 100
No. 8	65 to 80
No. 16	45 to 65
No. 30	25 to 45
No. 50	5 to 15
No. 100	0 to 5

4. Selected target slump must meet the requirements of this section, the contract documents, and must not exceed 6 in, unless approved otherwise by the City Engineer or Engineer of Record. Concrete must not show visible signs of segregation.
5. The target slump must be enforced for the duration of the project. Determine the slump by ASTM C143. Slump tolerances must meet the requirements of ACI 117.
6. The nominal maximum size of coarse aggregate for a mixture must not exceed three-fourths of the minimum clear spacing between reinforcement, one-fifth of the narrowest dimension between sides of forms, or one-third of the thickness of slabs or toppings.
7. Concrete must be air entrained for members assigned to Exposure Class F1, F2, or F3. The total air content must be in accordance with the requirements of the paragraph titled DURABILITY.
8. Measure air content at the point of delivery in accordance with ASTM C173 or ASTM C231.
9. Concrete for slabs to receive a hard-troweled finish must not contain an air-entraining admixture or have a total air content greater than 3 percent, unless otherwise approved.
10. Concrete properties and requirements for each portion of the structure are specified in the table below. Refer to the paragraph titled DURABILITY for more details on exposure categories and their requirements.

Nominal maximum size of aggregate, in.	Minimum cementitious material content, pounds per cubic yard
1-1/2	470
1	520
3/4	540
3/8	610

B. Durability
   1. Alkali-Aggregate Reaction
      a. Do not use any aggregate susceptible to alkali-carbonate reaction (ACR). Use one of the three options below for qualifying concrete mixtures to reduce the potential of alkali-silica reaction (ASR):
         1) For each aggregate used in concrete, the expansion result determined in accordance with ASTM C1293 must not exceed 0.04 percent at one year.
         2) For each aggregate used in concrete, the expansion result of the aggregate and cementitious materials combination determined in accordance with ASTM C1567 must not exceed 0.10 percent at an age of 16 days.
         3) Alkali content in concrete (LBA) must not exceed 4 pounds per cubic yard for moderately reactive aggregate or 3 pounds per cubic yard for highly reactive aggregate. Reactivity must be determined by testing in accordance with ASTM C1293 and categorized in accordance with ASTM C1778. Alkali content is calculated as follows:

            LBA = (cement content, pounds per cubic yard) × (equivalent alkali content of portland cement in percent/100 percent)

      b. Freezing and Thawing Resistance

SECTION 347000 – CONCRETE: continued

1) a. Provide concrete meeting the following requirements based on exposure class assigned to members for freezing-and-thawing exposure in Contract Documents:

	Minimum f'c psi	Exposure Categories^	Miscellaneous Requirements
Footings	3000 at 28 days or as specified by Design Engineer at 28 days	As specified by Engineer of Record.	Max. slump: 6 in. Submit to Engineer of Record for approval.
Columns and walls	5000 or as specified by Design Engineer at 28 days	As specified by Engineer of Record.	Nominal maximum aggregate size must be 3/4 in. Submit to Engineer of Record for approval.
Beams and elevated slabs	5000 or as specified by Design Engineer at 28 days	As specified by Engineer of Record.	Nominal maximum aggregate size must be 1/2 in. Submit to Engineer of Record for approval.
Slabs-on-ground	3000 or as specified by Design Engineer at 28 days	As specified by Engineer of Record.	Submit to Engineer of Record for approval.

SECTION 347000 – CONCRETE: continued

	Minimum f'c psi	Exposure Categories^	Miscellaneous Requirements
Lightweight concrete suspended slab	5000 or as specified by Design Engineer at 28 days	As specified by Engineer of Record.	Submit to Engineer of Record for approval.
Concrete Toppings	5000 or as specified by Design Engineer at 28 days	As specified by Engineer of Record.	Max. slump: 6 in. Submit to Engineer of Record for approval.

*The maximum *w/cm* limits do not apply to lightweight concrete.

2) Concrete must be air entrained for members assigned to Exposure Class F1, F2, or F3. The total air content must meet the requirements of the following table:

Exposure class	Maximum w/cm*	Minimum f'c, psi	Air content	Additional Requirements
F0	N/A	2500	N/A	
F1	0.55	3500	Depends on aggregate size	N/A
F2	0.45	4500	Depends on aggregate size	See limits on maximum cementitious material by mass
F3	0.40	5000	Depends on aggregate size	See limits on maximum cementitious material by mass

SECTION 347000 – CONCRETE: continued

Exposure class	Maximum w/cm*	Minimum f'c, psi	Air content	Additional Requirements
F3 plain concrete	0.45	4500	Depends on aggregate size	See limits on maximum cementitious material by mass

*Tolerance on air content as delivered must be plus/minus 1.5 percent.
^For f'c greater than 5000 psi, reducing air content by 1.0 percentage point is acceptable.

3) Submit documentation verifying compliance with specified requirements.

4) For sections of the structure that are assigned Exposure Class F3, submit certification on cement composition verifying that concrete mixture meets the requirements of the following table:

Nominal maximum aggregate size, in.	Total air content, percent*^	
	Exposure Class F2 and F3	Exposure Class F1
3/8	7.5	6.0
1/2	7.0	5.5
3/4	6.0	5.0
1	6.0	4.5
1-1/2	5.5	4.5
2	5.0	4.0
3	5.5	3.5

*Total cementitious material also includes ASTM C150, ASTM C595, ASTM C845, and ASTM C1157 cement. The maximum percentages above must include:

5) Fly ash or other pozzolans present in ASTM C1157 or ASTM C595 Type IP blended cement.
6) Slag cement present in ASTM C1157 or ASTM C595 Type IS blended cement.
7) Silica fume conforming to ASTM C1240 present in ASTM C1157 or ASTM C595 Type IP blended cement.

^Fly ash or other pozzolans and silica fume must constitute no more than 25 percent and 10 percent, respectively, of the total mass of the cementitious materials.

c. Corrosion and Chloride Content
   1) Provide concrete meeting the requirements of the following table based on the exposure class assigned to members requiring protection against reinforcement corrosion in Contract Documents.
   2) Submit documentation verifying compliance with specified requirements.
   3) Water-soluble chloride ion content contributed from constituents including water, aggregates, cementitious materials, and admixtures must be determined for the concrete mixture by ASTM C1218 at age between 28 and 42 days.
   4) The maximum water-soluble chloride ion (Cl-) content in concrete, percent by mass of cement is as follows:

Cementitious material	Maximum percent of total cementitious material by mass*
Fly ash or other pozzolans conforming to ASTM C618	25
Slag cement conforming to ASTM C989/C989M	50
Silica fume conforming to ASTM C1240	10
Total of fly ash or other pozzolans, slag cement, and silica fume	50^
Total of fly ash or other pozzolans and silica fume	35^

*The maximum w/cm limits do not apply to lightweight concrete.

d. Sulfate Resistance
   1) Provide concrete meeting the requirements of the following table based on the exposure class assigned to members for sulfate exposure.

Exposure class	Maximum w/cm*	Minimum f'c, psi	Maximum water-soluble chloride ion (CL-) content in concrete, percent by mass of cement
Reinforced concrete			
C0	N/A	2500	1.00
C1	N/A	2500	0.30
C2	0.4	5000	0.15
Prestressed concrete			
C0	N/A	2500	0.06
C1	N/A	2500	0.06
C2	0.4	5000	0.06

* For seawater exposure, other types of portland cements with tricalcium aluminate (C3A) contents up to 10 percent are acceptable if the w/cm does not exceed 0.40.
** The amount of the specific source of the pozzolan or slag cement to be used shall be at least the amount determined by test or service record to improve sulfate resistance when used in concrete containing Type V cement. Alternatively, the amount of the specific source of the pozzolan or slag used shall not be less than the amount tested in accordance with ASTM C1012 and meeting the requirements maximum expansion requirements listed herein.
^ Other available types of cement, such as Type III or Type I, are acceptable in exposure classes S1 or S2 if the C3A contents are less than 8 or 5 percent, respectively.

2) The maximum w/cm limits for sulfate exposure do not apply to lightweight concrete.
3) Alternative combinations of cementitious materials of those listed in this paragraph are acceptable if they meet the maximum expansion requirements listed in the following table:

Exposure Class	Maximum w/cm	Minimum f'c,psi	Required cementitious materials-types			Calcium chloride admixture
			ASTM C150	ASTM C595	ASTM C1157	
S0	N/A	2500	N/A	N/A	N/A	No restrictions
S1	0.50	4000	II*^	IP(MS);IS(<70)(MS); IT(MS)	MS	No restrictions
S2	0.45	4500	IV^	IP(HS);IS(<70)(HS); IT(HS)	HS	Not permitted
S3	0.45	4500	V + pozzolan or slag cement**	IP(HS)+ pozzolan or slag cement^; IS (<70)(HS) + pozzolan or slag cement^; IT (HS) + pozzolan or slag cement**	HS + pozzolan or slag cement**	not permitted

^The 12-month expansion limit applies only when the measured expansion exceeds the 6-month maximum expansion limit.

e. Concrete Temperature
   1) The temperature of concrete as delivered must not exceed 95°F.
f. Concrete permeability
   1) Provide concrete meeting the requirements of the following table based on exposure class assigned to members requiring low permeability in the Contract Documents.
   2) Submit documentation verifying compliance with specified requirements.

C. Trial Mixtures
   1. Trial mixtures must be in accordance to ACI 301.

SECTION 347000 – CONCRETE: continued

D. Ready-Mix Concrete
   1. Provide concrete that meets the requirements of ASTM C94.
   2. Ready-mixed concrete manufacturer must provide duplicate delivery tickets with each load of concrete delivered. Provide delivery tickets with the following information in addition to that required by ASTM C94.
      a. Type and brand cement
      b. Cement and supplementary cementitious materials content in 94-pound bags per cubic yard of concrete
      c. Maximum size of aggregate
      d. Amount and brand name of admixtures
      e. Total water content expressed by water cementitious material ratio

2.06 REINFORCEMENT

A. General Requirements
   1. Bend reinforcement cold. Fabricate reinforcement in accordance with fabricating tolerances of ACI 117.
   2. When handling and storing coated reinforcement, use equipment and methods that do not damage the coating. If stored outdoors for more than 2 months, cover coated reinforcement with opaque protective material.
   3. Submit manufacturer's certified test report for reinforcement.
   4. Submit placing drawings showing fabrication dimensions and placement locations of reinforcement and reinforcement supports. Placing drawings must indicate locations of splices, lengths of lap splices, and details of mechanical and welded splices.
   5. Submit request with locations and details of splices not indicated in Contract Documents.
   6. Submit request to place column dowels without using templates.
   7. Submit request and procedure to field-bend or straighten reinforcing bars partially embedded in concrete at locations not indicated in Contract Documents. Field bending or straightening of reinforcing bars is permitted where indicated in the Contract Documents.
   8. Submit request for field cutting, including location and type of bar to be cut and reason field cutting is required.

B. Reinforcing Bars
   1. General:
      a. Reinforcing bars must be deformed, except spirals, load-transfer dowels, and welded wire reinforcement, which may be plain.
      b. ASTM A615 with the bars marked S, Grade 60; or ASTM A996 with the bars marked R, Grade 60, or marked A, Grade 60. Cold drawn wire used for spiral reinforcement must conform to ASTM A1064.
      c. Submit mill certificates for reinforcing bars.
   2. Galvanized Reinforcing Bars
      a. Provide zinc-coated (galvanized) reinforcing bars that conform to ASTM A767, Class 1 or Class 2, as required by the contract Documents.
      b. Coating damage incurred during shipment, handling, and placing of zinc-coated (galvanized) reinforcing bars must be repaired in accordance with ASTM A780. Damaged areas must not exceed 2 percent of surface area in each linear foot of each bar or bar must not be used. The 2 percent limit on maximum allowed damaged coating area must include previously repaired areas damaged before shipment as required by ASTM A767.
   3. Epoxy-Coated Reinforcing Bars

a. Provide epoxy-coated reinforcing bars that conform to ASTM A775 or ASTM A934, Grade 60, or as indicated in Contract Documents.
b. Coatings must be applied in plants that are certified in accordance with Concrete Reinforcing Steel Institute (CRSI) Epoxy Coating Plant Certification Program or an equivalent program acceptable to the City.
c. Coating damage incurred during shipment, storage, handling, and placing of epoxy-coated reinforcing bars must be repaired. Repair damaged coating areas with patching material conforming to ASTM A775 or ASTM A934 as applicable and in accordance with material manufacturer's written recommendations. Damaged coating area must not exceed percent of surface area in each linear foot of each bar or bar must not be used. The 2 percent limit on damaged coating area must include repaired areas damaged before shipment as required by ASTM A775 or ASTM A934 as applicable. Fading of coating color shall not be cause for rejection of epoxy-coated reinforcing bars.

4. Dual-coated Reinforcing Bars
   a. Zinc and epoxy dual-coated reinforcing bars must conform to ASTM A1055
   b. Coating damage incurred during shipment, storage, handling, and placing of zinc and epoxy dual-coated reinforcing bars must be repaired. Repair damaged coating areas with patching material conforming to ASTM A1055 and in accordance with material manufacturer's written recommendations. Damaged coating area must not exceed 2 percent of surface area in each linear foot of each bar or bar must not be used. The 2 percent limit on damaged coating area must include repaired areas damaged before shipment as required by ASTM A1055. Fading of coating color shall not be cause for rejection of zinc and epoxy dual-coated reinforcing bars.
5. Stainless Steel Reinforcing Bars
   a. Stainless steel bars must meet the requirements of ASTM A955.
6. Headed Reinforcing Bars
   a. Headed reinforcing bars must conform to ASTM A970 including Annex A1, and other specified requirements.
7. Bar Mats
   a. Bar mats must conform to ASTM A184.
   b. If coated bar mats are required, repair damaged coating as required in the paragraph titled GALVANIZED REINFORCING BARS EPOXY-COATED REINFORCING BARS and DUAL-COATED REINFORCING BARS.
8. Headed Shear Stud Reinforcement
   a. Headed studs and headed stud assemblies must conform to ASTM A1044.

C. Mechanical Reinforcing Bar Connectors
1. General:
   a. Provide 125 percent minimum yield strength of the reinforcement bar.
   b. Mechanical splices for galvanized reinforcing bars must be galvanized or coated with dielectric material.
   c. Mechanical splices used with epoxy-coated or dual-coated reinforcing bars must be coated with dielectric material.
   d. Submit data on mechanical splices demonstrating compliance with this paragraph.

D. Wire
1. General:
   a. Plain or deformed steel wire must conform to ASTM A1064.
   b. Stainless steel wire must conform to ASTM A1022.
   c. Epoxy-coated wire must conform to ASTM A884. Coating damage incurred during shipment, storage, handling, and placing of epoxy-coated wires must be repaired.

Repair damaged coating areas with patching material in accordance with material manufacturer's written recommendations. If damaged area exceeds 2 percent of surface area in each linear foot of each wire, wire must not be used.

E. Welded wire reinforcement
   1. General:
      a. Use welded wire reinforcement specified in Contract Documents and conforming to one or more of the specifications given herein.
      b. Plain welded wire reinforcement must conform to ASTM A1064, with welded intersections spaced no greater than 12 in. apart in direction of principal reinforcement.
      c. Deformed welded wire reinforcement must conform to ASTM A1064, with welded intersections spaced no greater than 16 in. apart in direction of principal reinforcement.
      d. Epoxy-coated welded wire reinforcement must conform to ASTM A884. Coating damage incurred during shipment, storage, handling, and placing of epoxy-coated welded wire reinforcement must be repaired in accordance with ASTM A884. Repair damaged coating areas with patching material in accordance with material manufacturer's written recommendations. If damaged area exceeds 2 percent of surface area in each linear foot of each wire or welded wire reinforcement, the sheet containing the damaged area must not be used.
      e. Stainless steel welded wire reinforcement must conform to ASTM A1022.
      f. Zinc-coated (galvanized) welded wire reinforcement must conform to ASTM A1060. Coating damage incurred during shipment, storage, handling, and placing of zinc-coated (galvanized) welded wire reinforcement must be repaired in accordance with ASTM A780.

F. Reinforcing Bar Supports
   1. General:
      a. Provide reinforcement support types within structure as required by Contract Documents. Reinforcement supports must conform to CRSI RB4.1. Submit description of reinforcement supports and materials for fastening coated reinforcement if not in conformance with CRSI RB4.1.

G. Reinforcing Fibers
   1. Synthetic Fibers
      a. In addition to the requirements specified above, provide fiber reinforced concrete in accordance with ASTM C1116 Type III, synthetic fiber reinforced concrete, and as indicated in Contract Drawings.
   2. Steel Fibers
      a. If steel fiber-reinforced concrete is specified in Contract Documents for providing shear resistance, steel fibers must be deformed and conform to ASTM A820. Steel fibers must have a length-to-diameter ratio of at least 50 and not exceed 100.

H. Dowels for Load Transfer in Floors
   1. Provide greased dowels for load transfer in floors of the type, design, weight, and dimensions indicated. Provide dowel bars that are plain-billet steel conforming to ASTM A615, Grade 60 or as indicated in Contract Documents. Provide dowel pipe that is steel conforming to ASTM A53.

I. Welding
   1. General:
      a. Provide weldable reinforcing bars that conform to ASTM A706 and ASTM A615 and Supplement S1, Grade 60, except that the maximum carbon content must be 0.55 percent.

b. Comply with AWS D1.4 unless otherwise specified. Do not tack weld reinforcing bars.
c. Welded assemblies of steel reinforcement produced under factory conditions, such as welded wire reinforcement, bar mats, and deformed bar anchors, are allowed.
d. After completing welds on zinc-coated (galvanized), epoxy-coated, or zinc and epoxy dual-coated reinforcement, coat welds and repair coating damage as previously specified.

PART 3 – EXECUTION

3.01 EXAMINATION

A. General:
1. Do not begin installation until substrates have been properly constructed; verify that substrates are level.
2. If substrate preparation is the responsibility of another installer, notify the City of unsatisfactory preparation before processing.
3. Check field dimensions before beginning installation. If dimensions vary too much from design dimensions for proper installation, notify the City and wait for instructions before beginning installation.

3.02 PREPARATION

A. General
1. Determine quantity of concrete needed and minimize the production of excess concrete. Designate locations or uses for potential excess concrete before the concrete is poured.
2. Surfaces against which concrete is to be placed must be free of debris, loose material, standing water, snow, ice, and other deleterious substances before start of concrete placing.
3. Remove standing water without washing over freshly deposited concrete. Divert flow of water through side drains provided for such purpose.

B. Subgrade Under Foundations and Footings
1. When subgrade material is semi-porous and dry, sprinkle subgrade surface with water as required to eliminate suction at the time concrete is deposited, or seal subgrade surface by covering surface with specified vapor retarder.
2. When subgrade material is porous, seal subgrade surface by covering surface with specified vapor retarder.

C. Subgrade Under Slabs on Ground
1. Before construction of slabs on ground, have underground work on pipes and conduits completed and approved.
2. Previously constructed subgrade or fill must be cleaned of foreign materials
3. Finish surface of capillary water barrier under interior slabs on ground must not show deviation in excess of 1/4 inch when tested with a 10-foot straightedge parallel with and at right angles to building lines.
4. Finished surface of subgrade or fill under exterior slabs on ground must not be more than 0.02-foot above or 0.10-foot below elevation indicated.

D. Edge Forms and Screed Strips for Slabs
1. Set edge forms or bulkheads and intermediate screed strips for slabs to obtain indicated elevations and contours in finished slab surface and must be strong enough to support vibrating bridge screeds or roller pipe screeds if nature of specified slab finish requires use of such equipment.
2. Align concrete surface to elevation of screed strips by use of strike-off templates or approved compacting-type screeds.

E. Reinforcement and Other Embedded Items

1. Secure reinforcement, joint materials, and other embedded materials in position, inspected, and approved before start of concrete placing.
2. When concrete is placed, reinforcement must be free of materials deleterious to bond. Reinforcement with rust, mill scale, or a combination of both will be considered satisfactory, provided minimum nominal dimensions, nominal weight, and minimum average height of deformations of a hand-wire-brushed test specimen are not less than applicable ASTM specification requirements.

3.03 FORMS

A. General:
1. Provide forms, shoring, and scaffolding for concrete placement. Set forms mortar-tight and true to line and grade.
2. Chamfer above grade exposed joints, edges, and external corners of concrete 0.75 inch unless noted otherwise in Contract Documents. Place chamfer strips in corners of formwork to produce beveled edges on permanently exposed surfaces. Do not bevel reentrant corners or edges of formed joints of concrete.
3. Provide formwork with clean-out openings to permit inspection and removal of debris.
4. Inspect formwork and remove foreign material before concrete is placed.
5. At construction joints, lap form-facing materials over the concrete of previous placement. Ensure formwork is placed against hardened concrete so offsets at construction joints conform to specified tolerances.
6. Provide positive means of adjustment (such as wedges or jacks) of shores and struts. Do not make adjustments to formwork after concrete has reached initial setting. Brace formwork to resist lateral deflection and lateral instability.
7. Fasten form wedges in place after final adjustment of forms and before concrete placement.
8. Provide anchoring and bracing to control upward and lateral movement of formwork system.
9. Construct formwork for openings to facilitate removal and to produce opening dimensions as specified and within tolerances.
10. Provide runways for moving equipment. Support runways directly on formwork or structural members. Do not support runways on reinforcement. Loading applied by runways must not exceed capacity of formwork or structural members.
11. Position and support expansion joint materials, waterstops, and other embedded items to prevent displacement. Fill voids in sleeves, inserts, and anchor slots temporarily with removable material to prevent concrete entry into voids.
12. Clean surfaces of formwork and embedded materials of mortar, grout, and foreign materials before concrete placement.

B. Coating
1. Cover formwork surfaces with an acceptable material that inhibits bond with concrete.
2. If formwork release agent is used, apply to formwork surfaces in accordance with manufacturer's recommendations before placing reinforcement. Remove excess release agent on formwork prior to concrete placement.
3. Do not allow formwork release agent to contact reinforcement or hardened concrete against which fresh concrete is to be placed.

C. Reshoring
1. Do not allow structural members to be loaded with combined dead and construction loads in excess of loads indicated in the accepted procedure.
2. Install and remove reshores or backshores in accordance with accepted procedure.
3. For floors supporting shores under newly placed concrete, either leave original supporting shores in place, or install reshores or backshores. Shoring system and

supporting slabs must resist anticipated loads. Locate reshores and backshores directly under a shore position or as indicated on formwork shop drawings.

4. In multistory buildings, place reshoring or backshoring over a sufficient number of stories to distribute weight of newly placed concrete, forms, and construction live loads.

D. Reuse
   1. Reuse forms providing the structural integrity of concrete and the aesthetics of exposed concrete are not compromised.
   2. Wood forms must not be clogged with paste and must be capable of absorbing high water-cementitious material ratio paste.
   3. Remove leaked mortar from formwork joints before reuse.

E. Forms for Standard Rough Form Finish
   1. Provide formwork in accordance with ACI 301 Section 5 with a surface finish, SF-1.0, for formed surfaces that are to be concealed by other construction.

F. Forms for Standard Smooth Form Finish
   1. Provide formwork in accordance with ACI 301 Section 5 with a surface finish, SF-3.0, for formed surfaces that are exposed to view.

G. Form Ties
   1. For post-tensioned structures, do not remove formwork supports until stressing records have been accepted by the City.
   2. After ends or end fasteners of form ties have been removed, repair tie holes in accordance with ACI 301 Section 5 requirements.

H. Forms for Concrete Pan Joist Construction
   1. Pan-form units for one-way or two-way concrete joist and slab construction must be factory-fabricated units of the approximate section indicated. Units must consist of steel or molded fiberglass concrete form pans. Closure units must be furnished as required.

I. Tolerances for Form Construction
   1. Construct formwork so concrete surfaces conform to tolerances in ACI 117.
   2. Position and secure sleeves, inserts, anchors, and other embedded items such that embedded items are positioned within ACI 117 tolerances.
   3. To maintain specified elevation and thickness within tolerances, install formwork to compensate for deflection and anticipated settlement in formwork during concrete placement. Set formwork and intermediate screed strips for slabs to produce designated elevation, camber, and contour of finished surface before formwork removal. If specified finish requires use of vibrating screeds or roller pipe screeds, ensure that edge forms and screed strips are strong enough to support such equipment.

J. Removal of Forms and Supports
   1. If vertical formed surfaces require finishing, remove forms as soon as removal operations will not damage concrete.
   2. Remove top forms on sloping surfaces of concrete as soon as removal will not allow concrete to sag. Perform repairs and finishing operations required. If forms are removed before end of specified curing period, provide curing and protection.
   3. Do not damage concrete during removal of vertical formwork for columns, walls, and sides of beams. Perform needed repair and finishing operations required on vertical surfaces. If forms are removed before end of specified curing period, provide curing and protection.
   4. Leave formwork and shoring in place to support construction loads and weight of concrete in beams, slabs, and other structural members until in-place required strength of concrete is reached unless allowed otherwise by Design Engineer.
   5. Form-facing material and horizontal facing support members may be removed before in-place concrete reaches specified compressive strength if shores and other supports are designed to allow facing removal without deflection of supported slab or member.

K. Strength of Concrete Required for Removal of Formwork
   1. If removal of formwork, reshoring, or backshoring is based on concrete reaching a specified in-place strength, mold and field-cure cylinders in accordance with ASTM C31. Test cylinders in accordance with ASTM C39. Alternatively, use one or more of the methods listed herein to evaluate in-place concrete strength for formwork removal.
   2. Tests of cast-in-place cylinders in accordance with ASTM C873. This option is limited to slabs with concrete depths from 5 to 12 in.
   3. Penetration resistance in accordance with ASTM C803.
   4. Pullout strength in accordance with ASTM C900.
   5. Maturity method in accordance with ASTM C1074.

3.04 WATERSTOP INSTALLATION AND SPLICES

A. General:
   1. Provide waterstops in construction joints as indicated.
   2. Install formwork to accommodate waterstop materials. Locate waterstops in joints where indicated in Contract Documents. Minimize number of splices in waterstop. Splice waterstops in accordance with manufacturer's written instructions. Install factory-manufactured premolded mitered corners.
   3. Install waterstops to form a continuous diaphragm in each joint. Make adequate provisions to support and protect waterstops during progress of work. Protect waterstops protruding from joints from damage.

B. PVC Waterstop
   1. Make splices by heat sealing the adjacent waterstop edges together using a thermoplastic splicing iron utilizing a non-stick surface specifically designed for waterstop welding. Reform waterstops at splices with a remolding iron with ribs or corrugations to match the pattern of the waterstop. The spliced area, when cooled, must show no signs of separation, holes, or other imperfections when bent by hand in as sharp an angle as possible.

C. Rubber Waterstop
   1. Rubber waterstops must be spliced using cold bond adhesive as recommended by the manufacturer.

D. Thermoplastic Elastomeric Rubber Waterstop
   1. Fittings must be shop made using a machine specifically designed to mechanically weld the waterstop. A portable power saw must be used to miter or straight cut the ends to be joined to ensure good alignment and contact between joined surfaces. Maintain continuity of the characteristic features of the cross section of the waterstop (for example ribs, tabular center axis, and protrusions) across the splice.

E. Hydrophilic Waterstop
   1. Miter cut ends to be joined with sharp knife or shears. The ends must be adhered with adhesive.

3.05 PLACING REINFORCEMENT AND MISCELLANEOUS MATERIALS

A. Unless otherwise specified, placing reinforcement and miscellaneous materials must be in accordance to ACI 301. Provide bars, welded wire reinforcement, wire ties, supports, and other devices necessary to install and secure reinforcement.

B. Reinforcement must not have rust, scale, oil, grease, clay, or foreign substances that would reduce the bond. Rusting of reinforcement is a basis of rejection if the effective cross-sectional area or the nominal weight per unit length has been reduced. Remove loose rust prior to placing steel. Tack welding is prohibited.

C. Nonprestressed cast-in-place concrete members must have concrete cover for reinforcement given in the following table:

SECTION 347000 – CONCRETE: continued

Exposure class	Maximum w/cm*	Minimum f'c, psi	Additional minimum requirements
W0	N/A	2500	None
W1	0.5	4000	None

D. Cast-in-place prestressed concrete members must have concrete cover for reinforcement, ducts, and end fittings given in the following table:

E. Precast nonprestressed or prestressed concrete members manufactured under plant conditions must have concrete cover for reinforcement, ducts, and end fittings given in the following table:

Concrete Exposure	Member	Reinforcement	Specified cover, in.
Cast against and permanently in contact with ground	All	All	3
Exposed to weather or in contact with ground	Slabs, joists, and walls	All	1-1/2
	All other	All	1-1/2
Not exposed to weather or in contact with ground	Slabs, joists, and walls	All	3/4
	Beams, columns, and tension ties	Primary reinforcement	1-1/2
		Stirrups, ties, spirals, and hoops	1

F. General
   1. Provide details of reinforcement that are in accordance with the Contract Documents.

G. Vapor Retarder and Vapor Barrier
   1. Install in accordance with ASTM E1643. Provide beneath the on-grade concrete floor slab. Use the greatest widths and lengths practicable to eliminate joints wherever possible. Lap joints a minimum of 12 inches and tape.
   2. Remove torn, punctured, or damaged vapor retarder and vapor barrier material and provide with new vapor retarder and vapor barrier prior to placing concrete. Concrete placement must not damage vapor retarder and vapor barrier material. Place a 2-inch

layer of clean concrete sand on vapor retarder and vapor barrier before placing concrete. Place vapor barrier directly on underlying subgrade, base course, or capillary water barrier, unless it consists of crushed material or large granular material which could puncture the vapor barrier. In this case, a thin layer of approximately 1/2 inch of fine graded material should be rolled or compacted over the fill before installation of the vapor barrier to reduce the possibility of puncture. Control concrete placement so as to prevent damage to the vapor barrier.]

H. Perimeter Insulation
   1. Install perimeter insulation at locations indicated. Adhesive must be used where insulation is applied to the interior surface of foundation walls and may be used for exterior application.

I. Reinforcement Supports
   1. Provide reinforcement support in accordance with CRSI RB4.1 and ACI 301 Section 3 requirements. Supports for coated or galvanized bars must also be coated with electrically compatible material for a distance of at least 2 inches beyond the point of contact with the bars.

J. Epoxy Coated Reinforcing
   1. Epoxy Coated Reinforcing must meet the requirements of ASTM A934 "Guidelines for Job Site Practices" except as otherwise specified herein.
   2. Epoxy Coated Reinforcing Steel Placement and Coating Repair
      a. Carefully handle and install bars to minimize job site patching. Use the same precautions as described in the paragraph titled EPOXY-COATED REINFORCING BARS. Do not drag bars over other bars or over abrasive surfaces. Keep bar free of dirt and grit. When possible, assemble reinforcement as tied cages prior to final placement into the forms. Support assembled cages on padded supports. It is not expected that coated bars, when in final position ready for concrete placement, are completely free of damaged areas; however, excessive nicks and scrapes which expose steel is cause for rejection. Criteria for defects which require repair and for those that do not require repair are as indicated. Inspect for defects and provide required repairs prior to assembly. After assembly, reinspect and provide final repairs.
      b. Immediately prior to application of the patching material, manually remove any rust and debonded coating from the reinforcement by suitable techniques employing devices such as wire brushes and emery paper. Exercise cars during this surface preparation so that the damaged areas are not enlarged more than necessary to accomplish the repair. Clean damaged areas of dirt, debris, oil, and similar materials prior to application of the patching material.
      c. Do repair and patching in accordance with the patching material manufacturer's recommendations. These recommendations, including cure times, must be available at the job site at all times.
      d. Allow adequate time for the patching materials to cure in accordance with the manufacturer's recommendation prior to concrete placement.
      e. Rinse placed reinforcing bars with fresh water to remove chloride contamination prior to placing concrete.

K. Splicing
   1. As indicated in the Contract Documents. For splices not indicated follow ACI 301. Do not splice at points of maximum stress. Overlap welded wire reinforcement the spacing of the cross wires, plus 2 inches. AWS D1.4. Approve welded splices prior to use. Repair the cut ends of hot-dipped galvanized reinforcement steel to completely coat exposed steel, ASTM A780.

L. Future Bonding

1. Plug exposed, threaded, mechanical reinforcement bar connectors with a greased bolt. Provide bolt threads that match the connector. Countersink the connector in the concrete. Caulk the depression after the bolt is installed.

M. Setting Miscellaneous Material
1. Place and secure anchors and bolts, pipe sleeves, conduits, and other such items in position before concrete placement and support against displacement. Plumb anchor bolts and check location and elevation. Temporarily fill voids in sleeves with readily removable material to prevent the entry of concrete.

N. Fabrication
1. Shop fabricate reinforcing bars to conform to shapes and dimensions indicated for reinforcement, and as follows:
   a. Provide fabrication tolerances that are in accordance with ACI 117.
   b. Provide hooks and bends that are in accordance with the Contract Documents. Reinforcement must be bent cold to shapes as indicated. Bending must be done in the shop. Rebending of a reinforcing bar that has been bent incorrectly is not be permitted. Bending must be in accordance with standard approved practice and by approved machine methods.

      Deliver reinforcing bars bundled, tagged, and marked. Tags must be metal with bar size, length, mark, and other information pressed in by machine. Marks must correspond with those used on the placing drawings.
2. Do not use reinforcement that has any of the following defects:
   a. Bar lengths, depths, and bends beyond specified fabrication tolerances
   b. Bends or kinks not indicated on drawings or approved shop drawings
   c. Bars with reduced cross-section due to rusting or other cause
   d. Replace defective reinforcement with new reinforcement having required shape, form, and cross-section area.

O. Placing Reinforcement
1. General:
   a. Place reinforcement in accordance with ACI 301.
   b. For slabs on grade (over earth or over capillary water barrier) and for footing reinforcement, support bars or welded wire reinforcement on precast concrete blocks, spaced at intervals required by size of reinforcement, to keep reinforcement the minimum height specified above the underside of slab or footing.
   c. For slabs other than on grade, supports for which any portion is less than 1 inch from concrete surfaces that are exposed to view or to be painted must be of precast concrete units, plastic-coated steel, or stainless-steel protected bar supports. Precast concrete units must be wedge shaped, not larger than 3-1/2 by 3-1/2 inches, and of thickness equal to that indicated for concrete protection of reinforcement. Provide precast units that have cast-in galvanized tie wire hooked for anchorage and blend with concrete surfaces after finishing is completed.
2. Provide reinforcement that is supported and secured together to prevent displacement by construction loads or by placing of wet concrete, and as follows:
   a. Provide supports for reinforcing bars that are sufficient in number and have sufficient strength to carry the reinforcement they support, and in accordance with ACI 301 and CRSI 10MSP. Do not use supports to support runways for concrete conveying equipment and similar construction loads.
   b. Equip supports on ground and similar surfaces with sand-plates.
   c. Support welded wire reinforcement as required for reinforcing bars.
   d. Secure reinforcements to supports by means of tie wire. Wire must be black, soft iron wire, not less than 16 gage.

e. Reinforcement must be accurately placed, securely tied at intersections, and held in position during placing of concrete by spacers, chairs, or other approved supports. Point wire-tie ends away from the form. Unless otherwise indicated, numbers, type, and spacing of supports must conform to the Contract Documents.
f. Bending of reinforcing bars partially embedded in concrete is permitted only as specified in the Contract Documents.

P. Spacing of Reinforcing Bars
1. Spacing must be as indicated in the Contract Documents.
2. Reinforcing bars may be relocated to avoid interference with other reinforcement, or with conduit, pipe, or other embedded items. If any reinforcing bar is moved a distance exceeding one bar diameter or specified placing tolerance, resulting rearrangement of reinforcement is subject to preapproval by the City.

Q. Concrete Protection for Reinforcement
1. Additional concrete protection must be in accordance with the Contract Documents.

R. Welding
1. Welding must be in accordance with AWS D1.4.

3.06 BATCHING, MEASURING, MIXING, AND TRANSPORTING CONCRETE

A. General:
1. In accordance with ASTM C94, ACI 301, ACI 302.1R and ACI 304R, except as modified herein. Batching equipment must be such that the concrete ingredients are consistently measured within the following tolerances: 1 percent for cement and water, 2 percent for aggregate, and 3 percent for admixtures. Furnish mandatory batch ticket information for each load of ready-mix concrete.

B. Measuring
1. Make measurements at intervals as specified in paragraphs SAMPLING and TESTING.

C. Mixing
1. Mix concrete in accordance with ASTM C94, ACI 301 and ACI 304R.
2. Machine mix concrete. Begin mixing within 30 minutes after the cement has been added to the aggregates. Place concrete within 90 minutes of either addition of mixing water to cement and aggregates or addition of cement to aggregates if the concrete temperature is less than 84 degrees F.
3. Place concrete within 60 minutes if the concrete temperature is greater than 84 degrees F except as follows: if set retarding admixture is used and slump requirements can be met, limit for placing concrete may remain at 90 minutes. Additional water may be added, provided that both the specified maximum slump and submitted water-cementitious material ratio are not exceeded and the required concrete strength is still met. When additional water is added, an additional 30 revolutions of the mixer at mixing speed is required.
4. If the entrained air content falls below the specified limit, add a sufficient quantity of admixture, within the manufacturer's recommended dosage, to bring the entrained air content within the specified limits. Dissolve admixtures in the mixing water and mix in the drum to uniformly distribute the admixture throughout the batch. Do not reconstitute concrete that has begun to solidify.
5. When fibers are used, add fibers together with the aggregates and never as the first component in the mixer. Fibers must be dispensed into the mixing system using appropriate dispensing equipment and procedure as recommended by the manufacturer.

D. Transporting
1. Transport concrete from the mixer to the forms as rapidly as practicable. Prevent segregation or loss of ingredients. Clean transporting equipment thoroughly before each batch. Do not use aluminum pipe or chutes. Remove concrete which has segregated in transporting and dispose of as directed.

SECTION 347000 – CONCRETE: continued

3.07 PLACING CONCRETE

A. Place concrete in accordance with ACI 301 Section 5. Concrete shall be placed within 15 minutes of discharge into non-agitating equipment.

B. Footing Placement
   1. Concrete for footings may be placed in excavations without forms upon inspection and approval by the City. Excavation width must be a minimum of 4 inches greater than indicated.

C. Pumping
   1. ACI 304R and ACI 304.2R. Pumping must not result in separation or loss of materials nor cause interruptions sufficient to permit loss of plasticity between successive increments. Loss of slump in pumping equipment must not exceed 2 inches at discharge/placement. Do not convey concrete through pipe made of aluminum or aluminum alloy. Avoid rapid changes in pipe sizes. Limit maximum size of course aggregate to 33 percent of the diameter of the pipe. Limit maximum size of well-rounded aggregate to 40 percent of the pipe diameter. Take samples for testing at both the point of delivery to the pump and at the discharge end.
   2. Pumping Lightweight Concrete
      a. In accordance with ACI 213R unless otherwise specified. Presoak or presaturate aggregates. Cement content must be minimum of 564 pounds per cubic yard and be sufficient to accommodate a 4 to 6 inch slump. Make field trial run in accordance with ACI 213R.

D. Cold Weather
   1. Do not place concrete when the air temperature reaches 40 degrees F and is falling, or is already below that point. Placement may begin when the air temperature reaches 35 degrees F and is rising, or is already above 40 degrees. Cold weather concrete must meet the requirements of ACI 301 and ACI 306.1, unless otherwise specified. Do not allow concrete temperature to decrease below 50 degrees F. Obtain approval prior to placing concrete when the ambient temperature is below 40 degrees F or when concrete is likely to be subjected to freezing temperatures within 24 hours. Cover concrete and provide sufficient heat to maintain 50 degrees F minimum adjacent to both the formwork and the structure while curing. Limit the rate of cooling to 37 degrees F in any 1 hour and 50 degrees F per 24 hours after heat application.

E. Hot Weather
   1. Hot weather concrete must meet the requirements of ACI 301 and ACI 305.1, unless otherwise specified. Maintain required concrete temperature using Figure 4.2 in ACI 305R to prevent the evaporation rate from exceeding 0.2 pound of water per square foot of exposed concrete per hour. Cool ingredients before mixing or use other suitable means to control concrete temperature and prevent rapid drying of newly placed concrete. Shade the fresh concrete as soon as possible after placing. Start curing when the surface of the fresh concrete is sufficiently hard to permit curing without damage. Provide water hoses, pipes, spraying equipment, and water hauling equipment, where job site is remote to water source, to maintain a moist concrete surface throughout the curing period. Provide burlap cover or other suitable, permeable material with fog spray or continuous wetting of the concrete when weather conditions prevent the use of either liquid membrane curing compound or impervious sheets. For vertical surfaces, protect forms from direct sunlight and add water to top of structure once concrete is set.

F. Bonding
   1. Surfaces of set concrete at joints, must be roughened and cleaned of laitance, coatings, loose particles, and foreign matter. Roughen surfaces in a manner that exposes the

aggregate uniformly and does not leave laitance, loosened particles of aggregate, nor damaged concrete at the surface.

2. Obtain bonding of fresh concrete that has set as follows:
   a. At joints between footings and walls or columns, between walls or columns and the beams or slabs they support, and elsewhere unless otherwise specified; roughened and cleaned surface of set concrete must be dampened, but not saturated, immediately prior to placing of fresh concrete.
   b. At joints in exposed-to-view work; at vertical joints in walls; at joints near midpoint of span in girders, beams, supported slabs, other structural members; in work designed to contain liquids; the roughened and cleaned surface of set concrete must be dampened but not saturated and covered with a cement grout coating.
   c. Provide cement grout that consists of equal parts of portland cement and fine aggregate by weight with not more than 6 gallons of water per sack of cement. Apply cement grout with a stiff broom or brush to a minimum thickness of 1/16 inch. Deposit fresh concrete before cement grout has attained its initial set.

3.08 WASTE MANAGEMENT

A. General
   1. Provide as specified in the Waste Management Plan and as follows.

B. Mixing Equipment
   1. Before concrete pours, designate on-site area for cleaning out concrete mixing trucks. Minimize water used to wash equipment.

C. Reinforcing Steel
   1. Collect reinforcing steel and place in designated area for recycling.

D. Other Waste
   1. Will be the responsibility of the Contractor to dispose of at an approved location.

3.09 SURFACE FINISHES EXCEPT FLOOR, SLAB, AND PAVEMENT FINISHES

A. Defects
   1. Repair surface defects in accordance with ACI 301 Section 5.

B. Not Against Forms (Top of Walls)
   1. Surfaces not otherwise specified must be finished with wood floats to even surfaces. Finish must match adjacent finishes.

C. Formed Surfaces
   1. Tolerances in accordance with ACI 117 and as indicated.
   2. As-Cast Rough Form
      a. Provide for surfaces not exposed to public view a surface finish SF-1.0. Patch holes and defects in accordance with ACI 301.
   3. Standard Smooth Finish
      a. Provide for surfaces exposed to public view a surface finish SF-3.0. Patch holes and defects in accordance with ACI 301.

3.10 FLOOR, SLAB, AND PAVEMENT FINISHES AND MISCELLANEOUS CONSTRUCTION

A. General:
   1. In accordance with ACI 301 and ACI 302.1R, unless otherwise specified. Slope floors uniformly to drains where drains are provided. Depress the concrete base slab where quarry tile, ceramic tile, or as indicated in Contract Documents. Steel trowel and fine-broom finish concrete slabs that are to receive quarry tile, ceramic tile, or paver tile or as indicated in Contract Documents. Where straightedge measurements are specified, Contractor must provide straightedge.

B. Finish

SECTION 347000 – CONCRETE: continued

1. Place, consolidate, and immediately strike off concrete to obtain proper contour, grade, and elevation before bleedwater appears. Permit concrete to attain a set sufficient for floating and supporting the weight of the finisher and equipment. If bleedwater is present prior to floating the surface, drag the excess water off or remove by absorption with porous materials. Do not use dry cement to absorb bleedwater. Grate tampers ("jitterbugs") shall not be used.
2. Scratched
   a. Use for surfaces intended to receive bonded applied cementitious applications. Finish concrete in accordance with ACI 301 Section 5 for a scratched finish.
3. Floated
   a. Use for surfaces to receive roofing, waterproofing membranes, sand bed terrazzo, , exterior slabs where not otherwise specified. Finish concrete in accordance with ACI 301 Section 5 for a floated finish.
4. Steel Troweled
   a. Use for floors intended as walking surfaces, and for reception of floor coverings. Finish concrete in accordance with ACI 301 Section 5 for a steel troweled finish.
5. Nonslip Finish
   a. Use on surfaces of exterior platforms, steps, and landings; and on exterior and interior pedestrian ramps. Finish concrete in accordance with ACI 301 Section 5 for a dry-shake finish. After the selected material has been embedded by the two floatings, complete the operation with a broomed finish, unless noted otherwise in Construction Documents.
6. Broomed
   a. Use on surfaces of exterior walks, platforms, patios, and ramps, unless otherwise indicated. Finish concrete in accordance with ACI 301 Section 5 for a broomed finish.
7. Pavement
   a. Screed the concrete with a template advanced with a combined longitudinal and crosswise motion. Maintain a slight surplus of concrete ahead of the template. After screeding, float the concrete longitudinally. Use a straightedge to check slope and flatness; correct and refloat as necessary.
8. Concrete Toppings Placement
   a. The following requirements apply to the placement of toppings of concrete on base slabs that are either freshly placed and still plastic, or on hardened base slabs.
      1) Placing on a Fresh Base: Screed and bull float the base slab. As soon as the water sheen has disappeared, lightly rake the surface of the base slab with a stiff bristle broom to produce a bonding surface for the topping. Immediately spread the topping mixture evenly over the roughened base before final set takes place. Give the topping the finish indicated on the Contract Documents.
      2) Bonding to a Hardened Base: When the topping is to be bonded to a floated or troweled hardened base, roughen the base by scarifying, grit-blasting, scabbling, planing, flame cleaning, or acid-etching to lightly expose aggregate and provide a bonding surface. Remove dirt, laitance, and loose aggregate by means of a stiff wire broom. Keep the clean base wet for a period of 12 hours preceding the application of the topping. Remove excess water and apply a 1:1:1/2 cement-sand-water grout, and brush into the surface of the base slab. Do not allow the cement grout to dry, and spread it only short distances ahead of the topping placement. Do not allow the temperature differential between the completed base and the topping mixture to exceed 41 degrees F at the time of placing. Place the topping and finish as indicated in Construction Documents.
9. Chemical-Hardener Treatment

a. Apply liquid-chemical floor hardener where indicated after curing and drying concrete surface. Dilute liquid hardener with water and apply in three coats. First coat must be one-third strength, second coat one-half strength, and third coat two-thirds strength. Apply each coat evenly and allow to dry 24 hours between coats.
b. Approved proprietary chemical hardeners must be applied in accordance with manufacturer's printed directions.

10. Heavy-Duty Wear-Resistant Finish
    a. Give finish to slab surfaces where indicated.

11. Flat Floor Finishes
    a. Provide finish in accordance ACI 302.1R. Construct in accordance with one of the methods recommended in Table 10.15.3a, "Slab-on-ground flatness/levelness construction guide" or Table 10.15.3b, "Suspended slab flatness/levelness construction guide" appropriate for the type of construction. ACI 117 for tolerance tested by ASTM E1155.
    b. Measurement of Floor Tolerances
        1) Test slab within 24 hours of the final troweling. Provide tests to City within 12 hours after collecting the data. Floor flatness inspector is required to provide a tolerance report which must include:
        3.10.B.11.b.1.1 a. Key plan showing location of data collected.
        3.10.B.11.b.1.2 b. Results required by ASTM E1155.
    c. Remedies for Out of Tolerance Work
        1) Contractor is required to repair and retest any floors not meeting specified tolerances. Prior to repair, Contractor must submit and receive approval for the proposed repair, including product data from any materials proposed. Repairs must not result in damage to structural integrity of the floor. For floors exposed to public view, repairs must prevent any uneven or unusual coloring of the surface.
12. Concrete Walks
    a. Provide 4 inches thick minimum unless specified otherwise in Contract Documents. Provide contraction joints spaced every 5 linear feet unless otherwise indicated. Cut contraction joints 1 inch deep, or one fourth the slab thickness whichever is deeper, with a jointing tool after the surface has been finished. Provide 0.5 inch thick transverse expansion joints at changes in direction where sidewalk abuts curb, steps, rigid pavement, or other similar structures; space expansion joints every 50 feet maximum. Give walks a broomed finish. Unless indicated otherwise, provide a transverse slope of 1/48. Limit variation in cross section to 1/4 inch in 5 feet.
13. Pits and Trenches
    a. Place bottoms and walls monolithically or provide waterstops and keys.
14. Curbs and Gutters
    a. Provide contraction joints spaced every 10 feet maximum unless otherwise indicated. Cut contraction joints 3/4 inch deep with a jointing tool after the surface has been finished. Provide expansion joints 1/2 inch thick and spaced every 100 feet maximum unless otherwise indicated. Perform pavement finish.
15. Splash Blocks
    a. Provide at outlets of downspouts emptying at grade. Splash blocks may be precast concrete, and must be 24 inches long, 12 inches wide and 4 inches thick, unless otherwise indicated, with smooth-finished countersunk dishes sloped to drain away from the building.

SECTION 347000 – CONCRETE: continued

3.11 JOINTS

A. Construction Joints, unless otherwise specified in Construction Documents:
   1. Make and locate joints not indicated so as not to impair strength and appearance of the structure, as approved. Joints must be perpendicular to main reinforcement. Reinforcement must be continued and developed across construction joints. Locate construction joints as follows:
   2. Maximum Allowable Construction Joint Spacing:
      a. In walls at not more than 60 feet in any horizontal direction.
      b. In slabs on ground, so as to divide slab into areas not in excess of 1,200 square feet.
   3. Construction Joints for Constructability Purposes
      a. In walls, at top of footing; at top of slabs on ground; at top and bottom of door and window openings or where required to conform to architectural details; and at underside of deepest beam or girder framing into wall.
      b. In columns or piers, at top of footing; at top of slabs on ground; and at underside of deepest beam or girder framing into column or pier.
      c. Near midpoint of spans for supported slabs, beams, and girders unless a beam intersects a girder at the center, in which case construction joints in girder must offset a distance equal to twice the width of the beam. Make transfer of shear through construction joint by use of inclined reinforcement.
      d. Provide keyways at least 1-1/2-inches deep in construction joints in walls and slabs and between walls and footings; approved bulkheads may be used for slabs.

B. Isolation Joints in Slabs on Ground
   1. Provide joints at points of contact between slabs on ground and vertical surfaces, such as column pedestals, foundation walls, grade beams, and elsewhere as indicated.
   2. Fill joints with premolded joint filler strips 1/2 inch thick, extending full slab depth. Install filler strips at proper level below finish floor elevation with a slightly tapered, dress-and-oiled wood strip temporarily secured to top of filler strip to form a groove not less than 3/4 inch in depth where joint is sealed with sealing compound and not less than 1/4 inch in depth where joint sealing is not required. Remove wood strip after concrete has set. Contractor must clean groove of foreign matter and loose particles after surface has dried.

C. Contraction Joints in Slabs on Ground
   1. Provide joints to form panels as indicated.
   2. Under and on exact line of each control joint, cut 50 percent of welded wire reinforcement before placing concrete.
   3. Sawcut contraction joints into slab on ground in accordance with ACI 301 Section 5.
   4. Joints must be 1/8-inch wide by 1/5 to 1/4 of slab depth and formed by inserting hand-pressed fiberboard strip into fresh concrete until top surface of strip is flush with slab surface. After concrete has cured for at least 7 days, the Contractor must remove inserts and clean groove of foreign matter and loose particles.
   5. Sawcutting will be limited to within 12 hours after set and at 1/4 slab depth.

D. Sealing Joints in Slabs on Ground
   1. Contraction and control joints which are to receive finish flooring material must be sealed with joint sealing compound after concrete curing period. Slightly underfill groove with joint sealing compound to prevent extrusion of compound. Remove excess material as soon after sealing as possible.
   2. Sealed groove must be left ready to receive filling material that is provided as part of finish floor covering work.

3.12 CONCRETE FLOOR TOPPING

A. Standard Floor Topping

1. Provide topping for treads and platforms of metal steel stairs and elsewhere as indicated.
2. Preparations Prior to Placing
   a. When topping is placed on a green concrete base slab, screed surface of base slab to a level not more than 1-1/2 inches nor less than 1 inch below required finish surface. Remove water and laitance from surface of base slab before placing topping mixture. As soon as water ceases to rise to surface of base slab, place topping.
   b. When topping is placed on a hardened concrete base slab, remove dirt, loose material, oil, grease, asphalt, paint, and other contaminants from base slab surface, leaving a clean surface. Prior to placing topping mixture, 2-1/2-inches minimum, slab surface must be dampened and left free of standing water. Immediately before topping mixture is placed, broom a coat of neat cement grout onto surface of slab. Do not allow cement grout to set or dry before topping is placed.
   c. When topping is placed on a metal surface, such as metal pans for steel stairs, remove dirt, loose material, oil, grease, asphalt, paint, and other contaminants from metal surface.
3. Placing
   a. Spread standard topping mixture evenly on previously prepared base slab or metal surface, brought to correct level with a straightedge, and struck off. Topping must be consolidated, floated, checked for trueness of surface, and refloated as specified for float finish.
4. Finishing
   a. Give trowel finish standard floor topping surfaces.
   b. Give other finishes standard floor topping surfaces as indicated in Construction Documents.

B. Heavy-Duty Floor Topping
1. Provide topping where indicated in Construction Documents.
2. Base Slab
   a. Screed surface of slab to a level no more than 1-1/2 inches nor less than 1 inch below grade of finished floor.
   b. Give slab a scratch finish as specified.
   c. Preparations prior to placing.
      1) Remove dirt, loose material, oil, grease, asphalt, paint and other contaminants from base slab surface. Prior to placing topping mixture, dampen slab surface and leave free of standing water. Immediately before topping mixture is placed, broom a coat of neat cement grout onto surface of slab. Allow cement grout to set or dry before topping mixture is placed.
3. Placing
   a. Spread heavy-duty topping mixture evenly on previously prepared base slab, and bring to correct level with a straightedge, and strike off. Provide topping that is consolidated, floated, and checked for trueness of surface as specified for float finish, except that power-driven floats is the impact type.
4. Finishing
   a. Give trowel finish heavy-duty floor topping surfaces. Provide trowel finish as specified, except that additional troweling after first power troweling must be not less than three hand-troweling operations.

3.13 CURING AND PROTECTION

A. Curing and protection in accordance with ACI 301 Section 5, unless otherwise specified. Begin curing immediately following form removal. Avoid damage to concrete from vibration created by blasting, pile driving, movement of equipment in the vicinity, disturbance of formwork or protruding reinforcement, and any other activity resulting in ground vibrations.

Protect concrete from injurious action by sun, rain, flowing water, frost, mechanical injury, tire marks, and oil stains. Do not allow concrete to dry out from time of placement until the expiration of the specified curing period. Do not use membrane-forming compound on surfaces where appearance would be objectionable, on any surface to be painted, where coverings are to be bonded to the concrete, or on concrete to which other concrete is to be bonded. If forms are removed prior to the expiration of the curing period, provide another curing procedure specified herein for the remaining portion of the curing period. Provide moist curing for those areas receiving liquid chemical sealer, hardener, or epoxy coating. Allow curing compound/sealer installations to cure prior to the installation of materials that adsorb VOCs.

B. Requirements for Type III, High-Early-Strength Portland Cement
   1. The curing periods are required to be not less than one-fourth of those specified for portland cement, but in no case less than 72 hours.

C. Curing Periods
   1. ACI 301 Section 5, except 10 days for retaining walls, pavement or chimneys. Begin curing immediately after placement. Protect concrete from premature drying, excessively hot temperatures, and mechanical injury; and maintain minimal moisture loss at a relatively constant temperature for the period necessary for hydration of the cement and hardening of the concrete. The materials and methods of curing are subject to approval by the City.

D. Curing Formed Surfaces
   1. Accomplish curing of formed surfaces, including undersurfaces of girders, beams, supported slabs, and other similar surfaces by moist curing with forms in place for full curing period or until forms are removed. If forms are removed before end of curing period, accomplish final curing of formed surfaces by any of the curing methods specified above, as applicable.

E. Curing Unformed Surfaces
   1. Accomplish initial curing of unformed surfaces, such as monolithic slabs, floor topping, and other flat surfaces, by membrane curing.
   2. Accomplish final curing of unformed surfaces by any of curing methods specified, as applicable.
   3. Accomplish final curing of concrete surfaces to receive liquid floor hardener of finish flooring by moisture-retaining cover curing.

F. Temperature of Concrete During Curing
   1. When temperature of atmosphere is 41 degrees F and below, maintain temperature of concrete at not less than 55 degrees F throughout concrete curing period or 45 degrees F when the curing period is measured by maturity. When necessary, make arrangements before start of concrete placing for heating, covering, insulation, or housing as required to maintain specified temperature and moisture conditions for concrete during curing period.
   2. When the temperature of atmosphere is 80 degrees F and above or during other climatic conditions which cause too rapid drying of concrete, make arrangements before start of concrete placing for installation of wind breaks, of shading, and for fog spraying, wet sprinkling, or moisture-retaining covering of light color as required to protect concrete during curing period.
   3. Changes in temperature of concrete must be uniform and not exceed 37 degrees F in any 1 hour nor 80 degrees F in any 24-hour period.

G. Protection from Mechanical Injury
   1. During curing period, protect concrete from damaging mechanical disturbances, particularly load stresses, heavy shock, and excessive vibration and from damage caused by rain or running water.

H. Protection After Curing
   1. Protect finished concrete surfaces from damage by construction operations.

3.14 FIELD QUALITY CONTROL

A. Aggregate Testing
   1. Fine Aggregate
      a. At least once during each shift when the concrete plant is operating, there shall be one sieve analysis and fineness modulus determination in accordance with ASTM C136 and COE CRD-C 104 for the fine aggregate or for each fine aggregate if it is batched in more than one size or classification. The location at which samples are taken may be selected by the Contractor as the most advantageous for control. However, the Contractor is responsible for delivering fine aggregate to the mixer within specification limits. When the amount passing on any sieve is outside the specification limits, the fine aggregate shall be immediately resampled and retested. If there is another failure on any sieve, the fact shall be immediately reported to the City, concreting shall be stopped, and immediate steps taken to correct the grading.
   2. Coarse Aggregate
      a. At least once during each shift in which the concrete plant is operating, there shall be a sieve analysis in accordance with ASTM C136 for each size of coarse aggregate. The location at which samples are taken may be selected by the Contractor as the most advantageous for production control. However, the Contractor shall be responsible for delivering the aggregate to the mixer within specification limits. A test record of samples of aggregate taken at the same locations shall show the results of the current test as well as the average results of the five most recent tests including the current test. The Contractor may adopt limits for control coarser than the specification limits for samples taken other than as delivered to the mixer to allow for degradation during handling. When the amount passing any sieve is outside the specification limits, the coarse aggregate shall be immediately resampled and retested. If the second sample fails on any sieve, that fact shall be reported to the City. Where two consecutive averages of 5 tests are outside specification limits, the operation shall be considered out of control and reported to the City. Concreting shall be stopped and immediate steps shall be taken to correct the grading.

B. Concrete Sampling
   1. ASTM C172. Collect samples of fresh concrete to perform tests specified. ASTM C31 for making test specimens.

C. Concrete Testing
   1. Slump Tests
      a. ASTM C143. Take concrete samples during concrete placement/discharge. The maximum slump may be increased as specified with the addition of an approved admixture provided that the water-cementitious material ratio is not exceeded. Perform tests at commencement of concrete placement, when test cylinders are made, and for each batch (minimum) or every 20 cubic yards (maximum) of concrete.
   2. Temperature Tests
      a. Test the concrete delivered and the concrete in the forms. Perform tests in hot or cold weather conditions (below 50 degrees F and above 80 degrees F) for each batch (minimum) or every 20 cubic yards (maximum) of concrete, until the specified temperature is obtained, and whenever test cylinders and slump tests are made.
   3. Compressive Strength Tests
      a. ASTM C39. Make six 6 inch by 12-inch test cylinders for each set of tests in accordance with ASTM C31, ASTM C172 and applicable requirements of ACI 305R and ACI 306R. Take precautions to prevent evaporation and loss of water from the

specimen. Test two cylinders at 7 days, two cylinders at 28 days, and hold two cylinder in reserve. Take samples for strength tests of each concrete placed each day not less than once a day, nor less than once for each 100 cubic yards of concrete for the first 500 cubic yards, then every 500 cubic yards thereafter, nor less than once for each 5400 square feet of surface area for slabs or walls. For the entire project, take no less than five sets of samples and perform strength tests for each mix design of concrete placed. Each strength test result must be the average of two cylinders from the same concrete sample tested at 28 days. Concrete compressive tests must meet the requirements of this section, the Contract Documents, and ACI 301. Retest locations represented by erratic core strengths. Where retest does not meet concrete compressive strength requirements submit a mitigation or remediation plan for review and approval by the Design Engineer. Repair core holes with non-shrink grout. Match color and finish of adjacent concrete.

4. Air Content
   a. ASTM C173 or ASTM C231 for normal weight concrete and ASTM C173 for lightweight concrete. Test air-entrained concrete for air content at the same frequency as specified for slump tests.
5. Unit Weight of Structural Concrete
   a. ASTM C56 and ASTM C138. Determine unit weight of lightweight and normal weight concrete. Perform test for every 20 cubic yards maximum.
6. Chloride Ion Concentration
   a. Chloride ion concentration must meet the requirements of the paragraph titled CORROSION AND CHLORIDE CONTENT. Determine water soluble ion concentration in accordance with ASTM C1218. Perform test once for each mix design.
7. Strength of Concrete Structure
   a. The strength of the concrete structure will be considered to be deficient if any of the following conditions are identified:
      1) Failure to meet compressive strength tests as evaluated.
      2) Reinforcement not conforming to requirements specified.
      3) Concrete which differs from required dimensions or location in such a manner as to reduce strength.
      4) Concrete curing and protection of concrete against extremes of temperature during curing, not conforming to requirements specified.
      5) Concrete subjected to damaging mechanical disturbances, particularly load stresses, heavy shock, and excessive vibration.
      6) Poor workmanship likely to result in deficient strength.
      7) Where the strength of the concrete structure is considered deficient submit a mitigation or remediation plan for review and approval by the City.
8. Non-Conforming Materials
   a. Factors that indicate that there are non-conforming materials include (but not limited to) excessive compressive strength, inadequate compressive strength, excessive slump, excessive voids and honeycombing, concrete delivery records that indicate excessive time between mixing and placement, or excessive water was added to the mixture during delivery and placement. Any of these indicators alone are sufficient reason for the City to request additional sampling and testing.
   b. Investigations into non-conforming materials must be conducted at the Contractor's expense. The Contractor must be responsible for the investigation and must make written recommendations to adequately mitigate or remediate the non-conforming material. The City may accept, accept with reduced payment, require mitigation, or

require removal and replacement of non-conforming material at no additional cost to the Government.

9. Testing Concrete Structure for Strength
    a. When there is evidence that strength of concrete structure in place does not meet specification requirements or there are non-conforming materials, make cores drilled from hardened concrete for compressive strength determination in accordance with ASTM C42, and as follows:
        1) Take at least three representative cores from each member or area of concrete-in-place that is considered potentially deficient. Location of cores will be determined by the City.
        2) Test cores after moisture conditioning in accordance with ASTM C42 if concrete they represent is more than superficially wet under service.
        3) Air dry cores, (60 to 80 degrees F with relative humidity less than 60 percent) for 7 days before test and test dry if concrete they represent is dry under service conditions.
        4) Strength of cores from each member or area are considered satisfactory if their average is equal to or greater than 85 percent of the 28-day design compressive strength of the class of concrete.
        5) Core specimens will be taken and tested by an independent testing agency. If the results of core-boring tests indicate that the concrete as placed does not conform to the drawings and specification, the cost of such tests and restoration required must be borne by the Contractor.
        6) Fill core holes solid with patching mortar and finished to match adjacent concrete surfaces.
        7) Correct concrete work that is found inadequate by core tests in a manner approved by the City.

3.15 REPAIR, REHABILITATION AND REMOVAL

A. General:
    1. Before the City accepts the structure, the Contractor must inspect the structure for cracks, damage and substandard concrete placements that may adversely affect the service life of the structure. A report documenting these defects must be prepared which includes recommendations for repair, removal or remediation must be submitted to the City for approval before any corrective work is accomplished.

B. Crack Repair
    1. Prior to final acceptance, all cracks in excess of 0.02 inches wide must be documented and repaired. The proposed method and materials to repair the cracks must be submitted to the City for approval. The proposal must address the amount of movement expected in the crack due to temperature changes and loading.

C. Repair of Weak Surfaces
    1. Weak surfaces are defined as mortar-rich, rain-damaged, uncured, or containing exposed voids or deleterious materials. Concrete surfaces with weak surfaces less than 1/4 inch thick must be diamond ground to remove the weak surface. Surfaces containing weak surfaces greater than 1/4 inch thick must be removed and replaced or mitigated in a manner acceptable to the Design Engineer.

D. Failure of Quality Assurance Test Results
    1. Proposed mitigation efforts by the Contractor must be approved by the City prior to proceeding.

END OF SECTION 347000

This page was intentionally left blank.

SECTION 347100 - CONCRETE CURBS, GUTTERS, SIDEWALKS, MEDIANS AND PAVED DRAINAGE

PART 1 GENERAL

1.01 RELATED DOCUMENTS:

A. Drawings and General Provisions of the Contract, including General and Supplementary Conditions and Division 01 Specification Sections, apply to this Section.

1.02 SUMMARY:

A. This section includes related items specified elsewhere:
   1. Section 312050 – Site Preparation and Earthwork
   2. Section 347000 – Concrete

B. Refer to City Standard Details for related items
   1. Concrete Curb and Gutter
   2. Concrete Sidewalk and Driveway
   3. Curb Ramp with Detectable Warning
   4. Curb Ramp Type I
   5. Curb Ramp Type II
   6. Concrete Joint Details

1.03 REFERENCES:

A. Applicable Standards (Latest Edition)
   1. American Association of State Highway and Transportation (AASHTO):
      a. AASHTO M 182 - Standard Specification for Burlap Cloth Made from Jute or Kenaf and Cotton Mats
   2. American Concrete Institute (ACI):
      a. ACI 305 – Hot-Weather Concreting
      b. ACI 306 – Cold-weather Concreting
   3. American Society for Testing and Materials (ASTM):
      a. ASTM A615 – Standard Specification for Deformed and Plain Carbon-Steel Bars for Concrete Reinforcement
      b. ASTM A1064 – Standard Specification for Carbon-Steel Wire and Welded Wire Reinforcement, Plain and Deformed, for Concrete
      c. ASTM C31 – Standard Practice for Making and Curing Concrete Test Specimens in the Field
      d. ASTM C94 – Standard Specification for Ready-Mixed Concrete
      e. ASTM C143 – Standard Test Method for Slump of Hydraulic-Cement Concrete
      f. ASTM C171 – Standard Specification for Sheet Materials for Curing Concrete
      g. ASTM C172 – Standard Practice for Sampling Freshly Mixed Concrete
      h. ASTM C173 – Standard Test Method for Air Content of Freshly Mixed Concrete by the Volumetric Method
      i. ASTM C231 – Standard Test Method for Air Content of Freshly Mixed Concrete by the Pressure Method
      j. ASTM C309 – Standard Specification for Liquid Membrane-Forming Compounds for Curing Concrete
      k. ASTM C920 – Standard Specification for Elastomeric Joint Sealants
      l. ASTM D1751 – Standard Specification for Preformed Expansion Joint Filler for Concrete Paving and Structural Construction (Nonextruding and Resilient Bituminous Types)

m. ASTM D1752 – Standard Specification for Preformed Sponge Rubber, Cork and Recycled PVC Expansion Joint Fillers for Concrete Paving and Structural Construction
n. ASTM D5893 – Standard Specification for Cold Applied, Single Component, Chemically Curing Silicone Joint Sealant for Portland Cement Concrete Pavements

4. Federal Specifications:
   a. TT-S-00227 – Sealing Compound; Elastomeric Type, Multi component. (For caulking, sealing, and glazing in buildings and other structures.)
5. International Code Council (ICC):
   a. ICC A117.1 – Standard and Commentary Accessible and Usable Buildings and Facilities

1.04 INFORMATIONAL SUBMITTALS

A. General Requirements: Submit each item in this Article according to the Conditions of the Contract and as specified herein.
B. Product Data
   1. Concrete
   2. Test Reports
   3. Field Quality Control

1.05 EQUIPMENT, TOOLS, AND MACHINES

A. General Requirements
   1. Plant, equipment, machines, and tools used in the work will be subject to approval and must be maintained in a satisfactory working condition at all times. Use equipment capable of producing the required product, meeting grade controls, thickness control and smoothness requirements as specified. Discontinue using equipment that produces unsatisfactory results. Allow the City Engineer or City Representative access at all times to the plant and equipment to ensure proper operation and compliance with specifications.
B. Slip Form Equipment
   1. Slip form paver or curb forming machines, will be approved based on trial use on the job and must be self-propelled, automatically controlled, crawler mounted, and capable of spreading, consolidating, and shaping the plastic concrete to the desired cross section in one pass.

1.06 WEATHER LIMITATIONS

A. Placing During Cold Weather
   1. Do not place concrete when the air temperature reaches 40 degrees F and is falling, or is already below that point. Placement may begin when the air temperature reaches 35 degrees F and is rising, or is already above 40 degrees F. Make provisions to protect the concrete from freezing during the specified curing period. If necessary to place concrete when the temperature of the air, aggregates, or water is below 35 degrees F, placement and protection must be approved in writing. Approval will be contingent upon full conformance with the following provisions. Prepare and protect the underlying material so that it is entirely free of frost when the concrete is deposited. Use only aggregates that are free of ice, snow, and frozen lumps before entering the mixer. Provide covering or other means as needed to maintain the concrete at a temperature of at least 50 degrees F for not less than 72 hours after placing, and at a temperature above freezing for the

remainder of the curing period. Conform to ACI 306 when temperature is below 40 degrees F within a 24-hour period after placement of concrete.

B. Placing During Warm Weather
   1. The temperature of the concrete as placed must not exceed 85 degrees F except where an approved retarder is used. The placing temperature must not exceed 95 degrees F at any time. Conform to ACI 305 when temperature is above 90 degrees F, or is likely to rise above 90 degrees F within a 24-hour period after placement of concrete.

PART 2 – PRODUCTS

2.01 CONCRETE

A. General Requirements:
   1. Provide concrete conforming to the applicable requirements of Section 347000 CONCRETE except as otherwise specified. Concrete must have a minimum compressive strength of 4000 psi at 28 days. Size of aggregate must not exceed 1-1/2 inches. Submit copies of certified delivery tickets for all concrete used in the construction.

B. Air Content:
   1. Use concrete mixtures that have an air content by volume of concrete of 5 to 7 percent, based on measurements made immediately after discharge from the mixer.

C. Slump:
   1. Use concrete with a slump of 3 inches plus or minus 1 inch for hand placed concrete or 1 inch plus or minus 1/2 inch for slip formed concrete as determined in accordance with ASTM C143.

D. Reinforcement Steel:
   1. Use reinforcement bars conforming to ASTM A615. Use wire mesh reinforcement conforming to ASTM A1064.

2.02 CONCRETE CURING MATERIALS

A. Impervious Sheet Materials
   1. Use impervious sheet materials conforming to ASTM C171, type optional, except that polyethylene film, if used, must be white opaque.

B. Burlap
   1. Use burlap conforming to AASHTO M 182.

C. White Pigmented Membrane-Forming Curing Compound
   1. Use white pigmented membrane-forming curing compound conforming to ASTM C309, Type 2.

2.03 CONCRETE PROTECTION MATERIALS

A. General Requirements:
   1. Use concrete protection materials consisting of a linseed oil mixture of equal parts, by volume, of linseed oil and either mineral spirits, naphtha, or turpentine. At the option of the Contractor, commercially prepared linseed oil mixtures, formulated specifically for application to concrete to provide protection against the action of deicing chemicals may be used, except that emulsified mixtures are not acceptable.

SECTION 347100 – CONCRETE CURBS, GUTTERS, SIDEWALKS, MEDIANS AND PAVED DRAINAGE: continued

2.04 JOINT FILLER STRIPS

A. Contraction Joint Filler for Curb and Gutter
   1. Use hard-pressed fiberboard contraction joint filler for curb and gutter.

B. Expansion Joint Filler, Premolded
   1. Unless otherwise indicated, use 1/2 inch thick premolded expansion joint filler conforming to ASTM D1751 or ASTM D1752.

2.05 JOINT SEALANTS

A. Use cold-applied joint sealant conforming to ASTM C920 or ASTM D5893.

2.06 FORM WORK

A. General Requirements:
   1. Design and construct form work to ensure that the finished concrete will conform accurately to the indicated dimensions, lines, and elevations, and within the tolerances specified. Use wood or steel forms that are straight and of sufficient strength to resist springing during depositing and consolidating concrete.

B. Wood Forms
   1. Use forms that are surfaced plank, 2 inches nominal thickness, straight and free from warp, twist, loose knots, splits or other defects. Use forms with a nominal length of 10 feet. Radius bends may be formed with 3/4-inch boards, laminated to the required thickness.

C. Steel Forms
   1. Use channel-formed sections with a flat top surface and welded braces at each end and at not less than two intermediate points. Use forms with interlocking and self-aligning ends. Provide flexible forms for radius forming, corner forms, form spreaders, and fillers as needed. Use forms with a nominal length of 10 feet and that have a minimum of 3 welded stake pockets per form. Use stake pins consisting of solid steel rods with chamfered heads and pointed tips designed for use with steel forms.

D. Sidewalk Forms
   1. Use sidewalk forms that are of a height equal to the full depth of the finished sidewalk.

E. Curb and Gutter Forms
   1. Use curb and gutter outside forms that have a height equal to the full depth of the curb or gutter. Use rigid forms for curb returns, except that benders or thin plank forms may be used for curb or curb returns with a radius of 10 feet or more, where grade changes occur in the return, or where the central angle is such that a rigid form with a central angle of 90 degrees cannot be used. Back forms for curb returns may be made of 1-1/2 inch benders, for the full height of the curb, cleated together. In lieu of inside forms for curbs, a curb "mule" may be used for forming and finishing this surface, provided the results are approved.

F. Biodegradable Form Release Agent
   1. Use form release agent that is colorless and biodegradable and that is composed of at least 87 percent biobased material. Provide product that does not bond with, stain, or adversely affect concrete surfaces and does not impair subsequent treatments of concrete surfaces. Provide form release agent that does not contain diesel fuel, petroleum-based lubricating oils, waxes, or kerosene.

2.07 DETECTABLE WARNING SYSTEM

A. General Requirements:
   1. Detectable Warning Systems shown on the Contract plans are to meet requirements of ICC A117.1 - Section 705.

SECTION 347100 – CONCRETE CURBS, GUTTERS, SIDEWALKS, MEDIANS AND PAVED DRAINAGE: continued

PART 3 – EXECUTION

3.01 SUBGRADE PREPARATION

A. General Requirements:
   1. Provide subgrade preparation to the applicable requirements of Section 312050 SITE PREPARATION AND EARTHWORK except as otherwise specified in Contract Documents.

B. Sidewalk Subgrade:
   1. Place and compact the subgrade in accordance with Section 312050 SITE PREPARATION AND EARTHWORK. Test the subgrade for grade and cross section with a template extending the full width of the sidewalk and supported between side forms.

C. Curb and Gutter Subgrade:
   1. Place and compact the subgrade in accordance with Section 312050 SITE PREPARATION AND EARTHWORK. Test the subgrade for grade and cross section by means of a template extending the full width of the curb and gutter. Use subgrade materials equal in bearing quality to the subgrade under the adjacent pavement.

D. Medians and Paved Drainage:
   1. Place and compact the subgrade in accordance with Section 312050 SITE PREPARATION AND EARTHWORK. Test the subgrade for grade and cross section by means of a template extending the full width of the pavement and median. Use subgrade materials equal in bearing quality to the subgrade under the adjacent pavement.

E. Maintenance of Subgrade:
   1. Maintain subgrade in a smooth, compacted condition in conformity with the required section and established grade until the concrete is placed. The subgrade must be in a moist condition when concrete is placed. Prepare and protect subgrade so that it is free from frost when the concrete is deposited.

3.02 FORM SETTING

A. General Requirements:
   1. Set forms to the indicated alignment, grade and dimensions. Hold forms rigidly in place by a minimum of 3 stakes per form placed at intervals not to exceed 4 feet. Use additional stakes and braces at corners, deep sections, and radius bends, as required. Use clamps, spreaders, and braces where required to ensure rigidity in the forms. Remove forms in a manner that will not injure the concrete. Promptly and satisfactorily repair concrete found to be defective after form removal. Clean forms and coat with form oil or biodegradable form release agent each time before concrete is placed. Wood forms may, instead, be thoroughly wetted with water before concrete is placed, except that with probable freezing temperatures, oiling is mandatory.

B. Sidewalks:
   1. Set forms for sidewalks with the upper edge true to line and grade with an allowable tolerance of 1/8 inch in any 10-foot-long section. After forms are set, grade and alignment must be checked with a 10-foot straightedge. Sidewalks must have a transverse slope as indicated in Contract Documents. Do not remove side forms less than 12 hours after finishing has been completed.

C. Curbs and Gutters:
   1. Remove forms used along the front of the curb not less than 2 hours nor more than 6 hours after the concrete has been placed. Do not remove forms used along the back of

curb until the face and top of the curb have been finished, as specified for concrete finishing. Do not remove gutter forms while the concrete is sufficiently plastic to slump in any direction.

3.03 SIDEWALK AND MEDIAN CONCRETE PLACEMENT AND FINISHING

A. Formed Sidewalks and Medians

1. Place concrete in the forms in one layer. When consolidated and finished, the sidewalks and medians must be of the thickness indicated. Use a strike-off guided by side forms after concrete has been placed in the forms to bring the surface to proper section to be compacted. Consolidate concrete by tamping and spading or with an approved vibrator. Finish the surface to grade with a strike off.

B. Concrete Finishing:

1. After straight edging, when most of the water sheen has disappeared, and just before the concrete hardens, finish the surface with a wood or magnesium float or darby to a smooth and uniformly fine granular or sandy texture free of waves, irregularities, or tool marks. Produce a scored surface by brooming with a fiber-bristle brush in a direction transverse to that of the traffic, followed by edging.

C. Edge and Joint Finishing:

1. Finish all slab edges, including those at formed joints, with an edger having a radius of 1/8 inch. Edge transverse joints before brooming. Eliminate the flat surface left by the surface face of the edger with brooming. Clean and solidly fill corners and edges which have crumbled and areas which lack sufficient mortar for proper finishing with a properly proportioned mortar mixture and then finish.

D. Surface and Thickness Tolerances:

1. Finished surfaces must not vary more than 5/16 inch from the testing edge of a 10-foot straightedge. Permissible deficiency in section thickness will be up to 1/4 inch.

3.04 CURB AND GUTTER CONCRETE PLACEMENT AND FINISHING

A. Formed Curb and Gutter:

1. Place concrete to the required section in a single lift. Consolidate concrete using approved mechanical vibrators. Curve shaped gutters must be finished with a standard curb "mule".

B. Curb and Gutter Finishing

1. Approved slip formed curb and gutter machines may be used in lieu of hand placement.

C. Concrete Finishing

1. Float and finish exposed surfaces with a smooth wood float until true to grade and section and uniform in texture. Brush floated surfaces with a fine-hair brush using longitudinal strokes. Round the edges of the gutter and top of the curb with an edging tool to a radius of 1/2 inch. Immediately after removing the front curb form, rub the face of the curb with a wood or concrete rubbing block and water until blemishes, form marks, and tool marks have been removed. Brush the front curb surface, while still wet, in the same manner as the gutter and curb top. Finish the top surface of gutter to grade with a wood float.

D. Joint Finishing:

1. Finish curb edges at formed joints as indicated.

E. Surface and Thickness Tolerances:

1. Finished surfaces must not vary more than 1/4 inch from the testing edge of a 10-foot straightedge. Permissible deficiency in section thickness will be up to 1/4 inch.

SECTION 347100 – CONCRETE CURBS, GUTTERS, SIDEWALKS, MEDIANS AND PAVED DRAINAGE: continued

3.05 SIDEWALK JOINTS

A. General Requirements:
   1. Construct sidewalk joints to divide the surface into rectangular areas. Space transverse contraction joints at a distance equal to the sidewalk width or 5 feet on centers, whichever is less, and continuous across the slab. Construct longitudinal contraction joints along the centerline of all sidewalks 10 feet or more in width. Construct transverse expansion joints at sidewalk returns and opposite expansion joints in adjoining curbs. Where the sidewalk is not in contact with the curb, install transverse expansion joints as indicated. Form expansion joints around structures and features which project through or into the sidewalk pavement, using joint filler of the type, thickness, and width indicated. Expansion joints are not required between sidewalks and curb that abut the sidewalk longitudinally.

B. Sidewalk Contraction Joints:
   1. Form contraction joints in the fresh concrete by cutting a groove in the top portion of the slab to a depth of at least one-fourth of the sidewalk slab thickness. Unless otherwise approved or indicated, either use a jointer to cut the groove or saw a groove in the hardened concrete with a power-driven saw. Construct sawed joints by sawing a groove in the concrete with a 1/8-inch blade. Provide an ample supply of saw blades on the jobsite before concrete placement is started. Provide at least one standby sawing unit in good working order at the jobsite at all times during the sawing operations.

C. Sidewalk Expansion Joints
   1. Form expansion joints using 1/2-inch joint filler strips. Joint filler in expansion joints surrounding structures and features within the sidewalk may consist of preformed filler material conforming to ASTM D1752 or building paper. Hold joint filler in place with steel pins or other devices to prevent warping of the filler during floating and finishing. Immediately after finishing operations are completed, round joint edges using an edging tool having a radius of 1/8 inch. Remove any concrete over the joint filler. At the end of the curing period, clean the top of expansion joints and fill with cold-applied joint sealant. Use joint sealant that is gray or stone in color. Thoroughly clean the joint opening before the sealing material is placed. Do not spill sealing material on exposed surfaces of the concrete. Apply joint sealing material only when the concrete at the joint is surface dry and atmospheric and concrete temperatures are above 50 degrees F. Immediately remove any excess material on exposed surfaces of the concrete and clean the concrete surfaces.

D. Reinforcement Steel Placement
   1. Accurately and securely fasten reinforcement steel in place with suitable supports and ties before the concrete is placed.

3.06 CURB AND GUTTER JOINTS

A. General Requirements:
   1. Construct curb and gutter joints at right angles to the line of curb and gutter.

B. Contraction Joints:
   1. Construct contraction joints directly opposite contraction joints in abutting portland cement concrete pavements and spaced so that monolithic sections between curb returns will not be less than 5 feet nor greater than 15 feet in length.
      a. Construct contraction joints (except for slip forming) by means of 1/8 inch thick separators and of a section conforming to the cross section of the curb and gutter. Remove separators as soon as practicable after concrete has set sufficiently to preserve the width and shape of the joint and prior to finishing.

SECTION 347100 – CONCRETE CURBS, GUTTERS, SIDEWALKS, MEDIANS AND PAVED DRAINAGE: continued

b. When slip forming is used, cut the contraction joints in the top portion of the gutter/curb hardened concrete in a continuous cut across the curb and gutter, using a power-driven saw. Cut the contraction joint to a depth of at least one-fourth of the gutter/curb depth using a 1/8 inch saw blade.

C. Expansion Joints:

1. Form expansion joints by means of preformed expansion joint filler material cut and shaped to the cross section of curb and gutter. Construct expansion joints in curb and gutter directly opposite expansion joints of abutting portland cement concrete pavement using the same type and thickness of joints as joints in the pavement. Where curb and gutter do not abut portland cement concrete pavement, provide expansion joints at least 1/2 inch in width at intervals not less than 30 feet nor greater than 120 feet. Seal expansion joints immediately following curing of the concrete or as soon thereafter as weather conditions permit. Seal expansion joints and the top 1-inch depth of curb and gutter contraction-joints with joint sealant. Thoroughly clean the joint opening before the sealing material is placed. Do not spill sealing material on exposed surfaces of the concrete. Concrete at the joint must be surface dry and atmospheric and concrete temperatures must be above 50 degrees F at the time of application of joint sealing material. Immediately remove excess material on exposed surfaces of the concrete and clean concrete surfaces.

3.07 CURING AND PROTECTION

A. General Requirements:

1. Protect concrete against loss of moisture and rapid temperature changes for at least 7 days from the beginning of the curing operation. Protect unhardened concrete from rain and flowing water. All equipment needed for adequate curing and protection of the concrete must be on hand and ready for use before actual concrete placement begins. Protect concrete as necessary to prevent cracking of the pavement due to temperature changes during the curing period.
2. Mat Method
   a. Cover the entire exposed surface with two or more layers of burlap. Overlap mats at least 6 inches. Thoroughly wet the mat with water prior to placing on concrete surface and keep the mat continuously in a saturated condition and in intimate contact with concrete for not less than 7 days.
3. Impervious Sheeting Method
   a. Wet the entire exposed surface with a fine spray of water and then cover with impervious sheeting material. Lay sheets directly on the concrete surface with the light-colored side up and overlapped 12 inches when a continuous sheet is not used. Use sheeting that is not less than 18-inches wider than the concrete surface to be cured. Secure sheeting using heavy wood planks or a bank of moist earth placed along edges and laps in the sheets. Satisfactorily repair or replace sheets that are torn or otherwise damaged during curing. Sheeting must remain on the concrete surface to be cured for not less than 7 days.
4. Membrane Curing Method
   a. Apply a uniform coating of white-pigmented membrane-curing compound to the entire exposed surface of the concrete as soon after finishing as the free water has disappeared from the finished surface. Coat formed surfaces immediately after the forms are removed and in no case longer than 1 hour after the removal of forms. Do not allow concrete surface to dry before application of the membrane. If drying has occurred, moisten the surface of the concrete with a fine spray of water and apply the curing compound as soon as the free water disappears. Apply curing compound

in two coats by hand-operated pressure sprayers at a coverage of approximately 200 square feet/gallon for the total of both coats. Apply the second coat in a direction approximately at right angles to the direction of application of the first coat. The compound must form a uniform, continuous, coherent film that will not check, crack, or peel and must be free from pinholes or other imperfections. If pinholes, abrasion, or other discontinuities exist, apply an additional coat to the affected areas within 30 minutes. Respray concrete surfaces that are subjected to heavy rainfall within 3 hours after the curing compound has been applied by the method and at the coverage specified above. Respray areas where the curing compound is damaged by subsequent construction operations within the curing period. Take precautions necessary to ensure that the concrete is properly cured at sawed joints, and that no curing compound enters the joints. Tightly seal the top of the joint opening and the joint groove at exposed edges before the concrete in the region of the joint is resprayed with curing compound. Use a method used for sealing the joint groove that prevents loss of moisture from the joint during the entire specified curing period. Provide approved standby facilities for curing concrete pavement at a location accessible to the jobsite for use in the event of mechanical failure of the spraying equipment or other conditions that might prevent correct application of the membrane-curing compound at the proper time. Adequately protect concrete surfaces to which membrane-curing compounds have been applied during the entire curing period from pedestrian and vehicular traffic, except as required for joint-sawing operations and surface tests, and from other possible damage to the continuity of the membrane.

B. Backfilling
   1. After curing, remove debris and backfill, grade, and compact the area adjoining the concrete to conform to the surrounding area in accordance with lines and grades indicated.

C. Protection
   1. Protect completed concrete from damage until accepted. Repair damaged concrete and clean concrete discolored during construction. Remove and reconstruct concrete that is damaged for the entire length between regularly scheduled joints. Refinishing the damaged portion will not be acceptable. Dispose of removed material as directed.

D. Protective Coating
   1. Apply a protective coating of linseed oil mixture to the exposed-to-view concrete surface after the curing period, if concrete will be exposed to de-icing chemicals within 6 weeks after placement. Moist cure concrete to receive a protective coating.
      a. Application
         1) Complete curing and backfilling operation prior to applying two coats of protective coating. Concrete must be surface dry and clean before each application. Spray apply at a rate of not more than 50 square yards/gallon for first application and not more than 70 square yards/gallon for second application, except that the number of applications and coverage for each application for commercially prepared mixture must be in accordance with the manufacturer's instructions. Protect coated surfaces from vehicular and pedestrian traffic until dry.
      b. Precautions
         1) Do not heat protective coating by direct application of flame or electrical heaters and protect the coating from exposure to open flame, sparks, and fire

adjacent to open containers or applicators. Do not apply material at ambient or material temperatures lower than 50 degrees F.

3.08 FIELD QUALITY CONTROL

A. General Requirements
   1. Submit copies of all test reports within 24 hours of completion of the test.
   2. Perform the inspection and tests described and meet the specified requirements for inspection details and frequency of testing. Based upon the results of these inspections and tests, take action and submit reports as required below, and additional tests to ensure that the requirements of these specifications are met.

B. Concrete Testing:
   1. Strength Testing:
      a. Take concrete samples in accordance with ASTM C172/C172M not less than once a day nor less than once for every 250 cubic yards of concrete placed. Mold cylinders in accordance with ASTM C31/C31M for strength testing by an approved laboratory. Each strength test result must be the average of 2 test cylinders from the same concrete sample tested at 28 days, unless otherwise specified or approved. Concrete specified on the basis of compressive strength will be considered satisfactory if the averages of all sets of three consecutive strength test results equal or exceed the specified strength, and no individual strength test result falls below the specified strength by more than 500 psi.
   2. Air Content:
      a. Determine air content in accordance with ASTM C173/C173M or ASTM C231. Use ASTM C231/C231M with concretes and mortars made with relatively dense natural aggregates. Make two tests for air content on randomly selected batches of each class of concrete placed during each shift. Make additional tests when excessive variation in concrete workability is reported by the placing foreman or the Government inspector. Notify the placing foreman if results are out of tolerance. The placing foreman must take appropriate action to have the air content corrected at the plant. Additional tests for air content will be performed on each truckload of material until such time as the air content is within the tolerance specified.
   3. Slump Test:
      a. Perform two slump tests on randomly selected batches of each class of concrete for every 250 cubic yards, or fraction thereof, of concrete placed during each shift. Perform additional tests when excessive variation in the workability of the concrete is noted or when excessive crumbling or slumping is noted along the edges of slip-formed concrete.
   4. Thickness Evaluation:
      a. Determine the anticipated thickness of the concrete prior to placement by passing a template through the formed section or by measuring the depth of opening of the extrusion template of the curb forming machine. If a slip form paver is used for sidewalk placement, construct the subgrade true to grade prior to concrete placement. The thickness will be determined by measuring each edge of the completed slab.
   5. Surface Evaluation:
      a. Provide finished surfaces for each category of the completed work that are uniform in color and free of blemishes and form or tool marks.

SECTION 347100 – CONCRETE CURBS, GUTTERS, SIDEWALKS, MEDIANS AND PAVED DRAINAGE: continued

3.09 SURFACE DEFICIENCIES AND CORRECTIONS

A. Thickness Deficiency:

1. When measurements indicate that the completed concrete section is deficient in thickness by more than 1/4 inch the deficient section will be removed, between regularly scheduled joints, and replaced.

B. High Areas:

1. In areas not meeting surface smoothness and plan grade requirements, reduce high areas either by rubbing the freshly finished concrete with carborundum brick and water when the concrete is less than 36 hours old or by grinding the hardened concrete with an approved surface grinding machine after the concrete is 36 hours old or more. The area corrected by grinding the surface of the hardened concrete must not exceed 5 percent of the area of any integral slab, and the depth of grinding must not exceed 1/4 inch. Remove and replace pavement areas requiring grade or surface smoothness corrections in excess of the limits specified.

C. Appearance:

1. Exposed surfaces of the finished work will be inspected by the City Engineer or City Engineer or City Representative and deficiencies in appearance will be identified. Remove and replace areas which exhibit excessive cracking, discoloration, form marks, or tool marks or which are otherwise inconsistent with the overall appearances of the work.

3.10 DETECTABLE WARNING SYSTEM

A. General:

1. Install Detectable Warning Systems required by Contract documents in accordance with ICC A117.1, Section 705, and by manufacturers' installation instructions.

END OF SECTION 347100

This page was intentionally left blank.

SECTION 347200 – ASPHALT CONCRETE PAVEMENT

PART 1 – GENERAL

1.01 RELATED DOCUMENTS:

A. Drawings and General Provisions of the Contract, including General and Supplementary Conditions and Division 01 Specification Sections, apply to this Section.

1.02 SUMMARY:

A. This section includes asphalt pavement and related items.

1.03 REFERENCES:

A. Applicable Standards (Latest Edition):
   1. AMERICAN ASSOCIATION OF STATE HIGHWAY AND TRANSPORTATION OFFICIALS (AASHTO)
      a. AASHTO M 156 – Standard Specification for Requirements for Mixing Plants for Hot-Mixed, Hot-Laid Bituminous Paving Mixtures
      b. AASHTO T 304 – Standard Method of Test for Uncompacted Void Content of Fine Aggregate
      c. AASHTO T 329 –Standard Test Method for Moisture Content of Hot Mix Asphalt (HMA) by Oven Method
   2. ASPHALT INSTITUTE (AI)
      a. AI MS-2 – Asphalt Mix Design Methods
   3. ASTM INTERNATIONAL (ASTM)
      a. ASTM C29 – Standard Test Method for Bulk Density ("Unit Weight") and Voids in Aggregate
      b. ASTM C88 – Standard Test Method for Soundness of Aggregates by Use of Sodium Sulfate or Magnesium Sulfate
      c. ASTM C117 – Standard Test Method for Materials Finer than 75-um (No. 200) Sieve in Mineral Aggregates by Washing
      d. ASTM C127 – Standard Test Method for Density, Relative Density (Specific Gravity), and Absorption of Coarse Aggregate
      e. ASTM C128 – Standard Test Method for Density, Relative Density (Specific Gravity), and Absorption of Fine Aggregate
      f. ASTM C131 – Standard Test Method for Resistance to Degradation of Small-Size Coarse Aggregate by Abrasion and Impact in the Los Angeles Machine
      g. ASTM C136 – Standard Test Method for Sieve Analysis of Fine and Coarse Aggregates
      h. ASTM C142 – Standard Test Method for Clay Lumps and Friable Particles in Aggregates
      i. ASTM C566 – Standard Test Method for Total Evaporable Moisture Content of Aggregate by Drying
      j. ASTM D75 – Standard Practice for Sampling Aggregates
      k. ASTM D140 – Standard Practice for Sampling Asphalt Materials
      l. ASTM D242 – Mineral Filler for Bituminous Paving Mixtures
      m. ASTM D946 – Standard Specification for Penetration-Graded Asphalt Cement for Use in Pavement Construction
      n. ASTM D979 – Sampling Bituminous Paving Mixtures
      o. ASTM D2041 – Theoretical Maximum Specific Gravity and Density of Bituminous Paving Mixtures

p. ASTM D2172 – Standard Test Methods for Quantitative Extraction of Asphalt Binder from Asphalt Mixtures
q. ASTM D2419 – Sand Equivalent Value of Soils and Fine Aggregate
r. ASTM D2726 – Standard Test Method for Bulk Specific Gravity and Density of Non-Absorptive Compacted Bituminous Mixtures
s. ASTM D2872 – Standard Test Method for Effect of Heat and Air on a Moving Film of Asphalt (Rolling Thin-Film Oven Test)
t. ASTM D2950 - Density of Bituminous Concrete in Place by Nuclear Method.
u.
v. ASTM D3203 – Standard Test Method for Percent Air Voids in Compacted Asphalt Mixtures
w. ASTM D3665 – Standard Practice for Random Sampling of Construction Materials
x. ASTM D3666 – Standard Specification for Minimum Requirements for Agencies Testing and Inspecting Road and Paving Materials
y. ASTM D4791 – Flat Particles, Elongated Particles, or Flat and Elongated Particles in Coarse Aggregate
z. ASTM D4867 – Effect of Moisture on Asphalt Concrete Paving Mixtures
aa. ASTM D5361 – Standard Practice for Sampling Compacted Asphalt Mixtures for Laboratory Testing
bb. ASTM D5444 – Mechanical Size Analysis of Extracted Aggregate
cc. ASTM D5821 – Standard Test Method for Determining the Percentage of Fractured Particles in Coarse Aggregate
dd. ASTM D6084 – Standard Test Method for Elastic Recovery of Asphalt Materials by Ductilometer
ee. ASTM D6307 – Standard Test Method for Asphalt Content of Asphalt Mixture by Ignition Method
ff. ASTM D6373 – Standard Specification for Performance Graded Asphalt Binder
gg. ASTM D6925 – Standard Test Method for Preparation and Determination of the Relative Density of Hot Mix Asphalt (HMA) Specimens by Means of the Superpave Gyratory Compactor
hh. ASTM D6926 – Standard Practice for Preparation of Asphalt Mixture Specimens Using Marshall Apparatus
ii. ASTM D6927 – Standard Test Method for Marshall Stability and Flow of Bituminous Mixtures
jj. ASTM D7405 – Standard Test Method for Multiple Stress Creep and Recovery (MSCR) of Asphalt Binder Using a Dynamic Shear Rheometer
kk. ASTM D8239 – Standard Specification for Performance-Graded Asphalt Binder Using the Multiple Stress Creep and Recovery (MSCR) Test
ll. ASTM E1274 – Standard Test Method for Measuring Pavement Roughness Using a Profilograph

4. MISSOURI STANDARD SPECIFICATIONS FOR HIGHWAY CONSTRUCTION
   a. Section 304 – Aggregate Base Course.
   b. Section 401 - Plant Mix Bituminous Base and Pavement.
   c. Section 403 - Asphaltic Concrete Pavement.
   d. Section 404 - Bituminous Mixing Plant.
   e. Section 407 - Tack Coat.

1.04 INFORMATIONAL SUBMITTALS:

A. General: Submit each item in this Article according to the Conditions of the Contract and as specified herein.

B. Include, but not limited to, product data and shop drawings for the following:

SECTION 347200 – ASPHALT CONCRETE PAVEMENT: continued

1. Product and Design Data:
   a. Mix Design:
      1) Contractor shall provide mix designs and prepare a job mix formula for each mixture specified. Mix designs shall be accomplished by a qualified, independent, commercial testing laboratory.
      2) Furnish copies of the proposed job mix formula, including the laboratory test report, to the Engineer for approval not less than 30 days prior to beginning production of paving mixture. Test reports shall indicate the following:
         a) Gradation: Each component aggregate and combined aggregates.
         b) Asphalt cement content in percent of total mix by weight.
         c) Graphic plots of:
            (1) Density versus asphalt content.
            (2) Stability versus asphalt content.
            (3) Percent voids total mix versus asphalt content.
            (4) Flow versus asphalt content.
   b. Contractor Quality Control
2. Certificates:
   a. Tack Coat
   b. Asphalt cement binder
3. Samples:
   a. Core or saw undamaged Samples from the completed pavement courses.
      1) Core Samples shall be not less than 6-inch diameter.
      2) Take three Samples from each day's production or from each 300 tons of mixture placed, whichever is the greater number of samples.
      3) Deliver Samples to the laboratory designated by the Engineer. Samples may be tested for density and extraction.

1.05 TESTING:

A. Completed pavement will be tested to determine density, gradation, and asphalt content (by extraction):
   1. At Engineer's option, density may be tested by any of the following methods:
      a. As specified in Section 401.7.8 of Missouri Standard Specifications for Highway Construction.
      b. ASTM D2950.
B. Contractor shall perform such other tests as he deems necessary to assure production of asphaltic concrete conforming to specified quality.
C. Contractor shall test surface smoothness by applying a 10-foot straightedge both parallel and at right angles to the centerline of paved areas:
   1. Test at 50-foot (maximum) intervals, and more frequently when requested by the City.
   2. City will observe straightedge testing. A rolling straightedge of the "Skorch" type may be used at the Contractor's option.

1.06 TOLERANCES:

A. Density of completed pavement shall not be less than the following percentage of the density of the laboratory mix design:
   1. All lifts: 92%
B. Smoothness shall be such that variation from a 10-foot straightedge does not exceed the following limits:
   1. Final Lift of Base Course: 1/2-inch.
   2. Surface Course: 1/4-inch.

SECTION 347200 – ASPHALT CONCRETE PAVEMENT: continued

PART 2 – PRODUCTS

2.01 GENERAL:

A. Equipment and Materials shall conform to the requirements of Missouri Standard Specifications for Highway Construction.

2.02 MATERIAL:

A. Base Rock
   1. Aggregate: Type 1

B. Bituminous Materials
   1. Asphalt Cement: Penetration grade 60 to 70 or 85 to 100 at Contractor's option.
   2. Tack Coat: Any of the following liquid asphalts at Contractor's option:
   3. SS-1h emulsion diluted 1 part emulsion to 2 parts water.

C. Asphaltic Concrete Mixture:
   1. Mixtures:
      a. Base Course: Section 401 Plant Mix Bituminous Base or Section 403 Asphaltic Concrete Pavement, Type SP190 or Type 250, Missouri Standard Specifications for Highway Construction.
   2. Surface Course: Section 401, Type BP-2 or Section 403, Type SP125, Missouri Standard Specifications for Highway Construction.
   3. Mix Properties:
      a. Marshall Stability: 1,200 minimum
      b. Number of Compaction Blows: 50.c. Flow: 8 to 16.
      c. Percent Air Voids:
         1) Base: 4 to 7.
         2) Surface: 4 to 7.

PART 3 – EXECUTION

3.01 GENERAL:

A. Performance shall conform to the requirements of Missouri Standard Specifications for Highway Construction, Sections 304, 401, and 403.

3.02 TACK COAT:

A. Apply tack coat to the surface of all existing pavement and all previously placed asphaltic concrete lifts or courses before placing the succeeding lift.

B. Apply at the following rates:
   1. Emulsion: Maximum of 0.2 and a minimum of 0.10 gallon per square yard.
   2. Liquid Asphalt: 0.15 ± 0.05 gallon per square yard.

END OF SECTION 347200

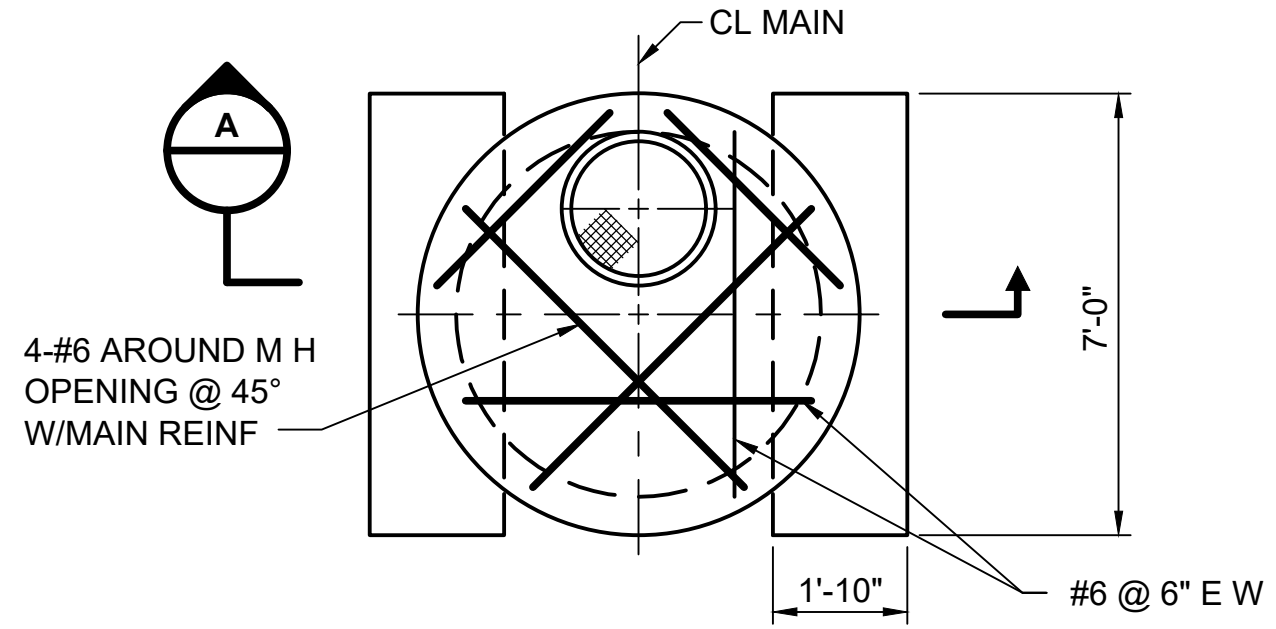

PLAN

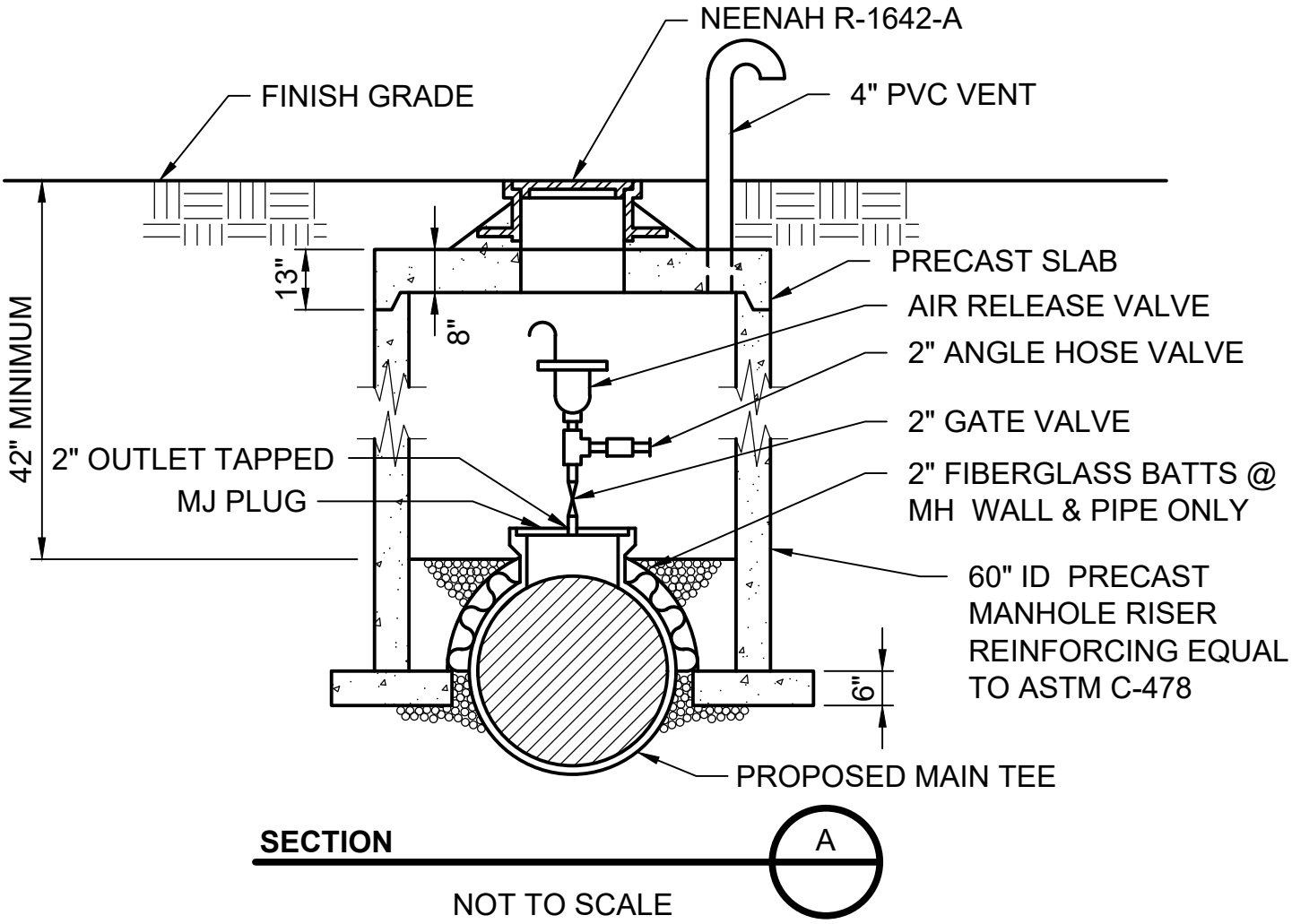

SECTION A

NOT TO SCALE

AIR RELEASE VALVE MANHOLE	**CITY OF REPUBLIC, MO STANDARD DETAIL #1**	
	SPEC SECTION 331216	APRIL 2022

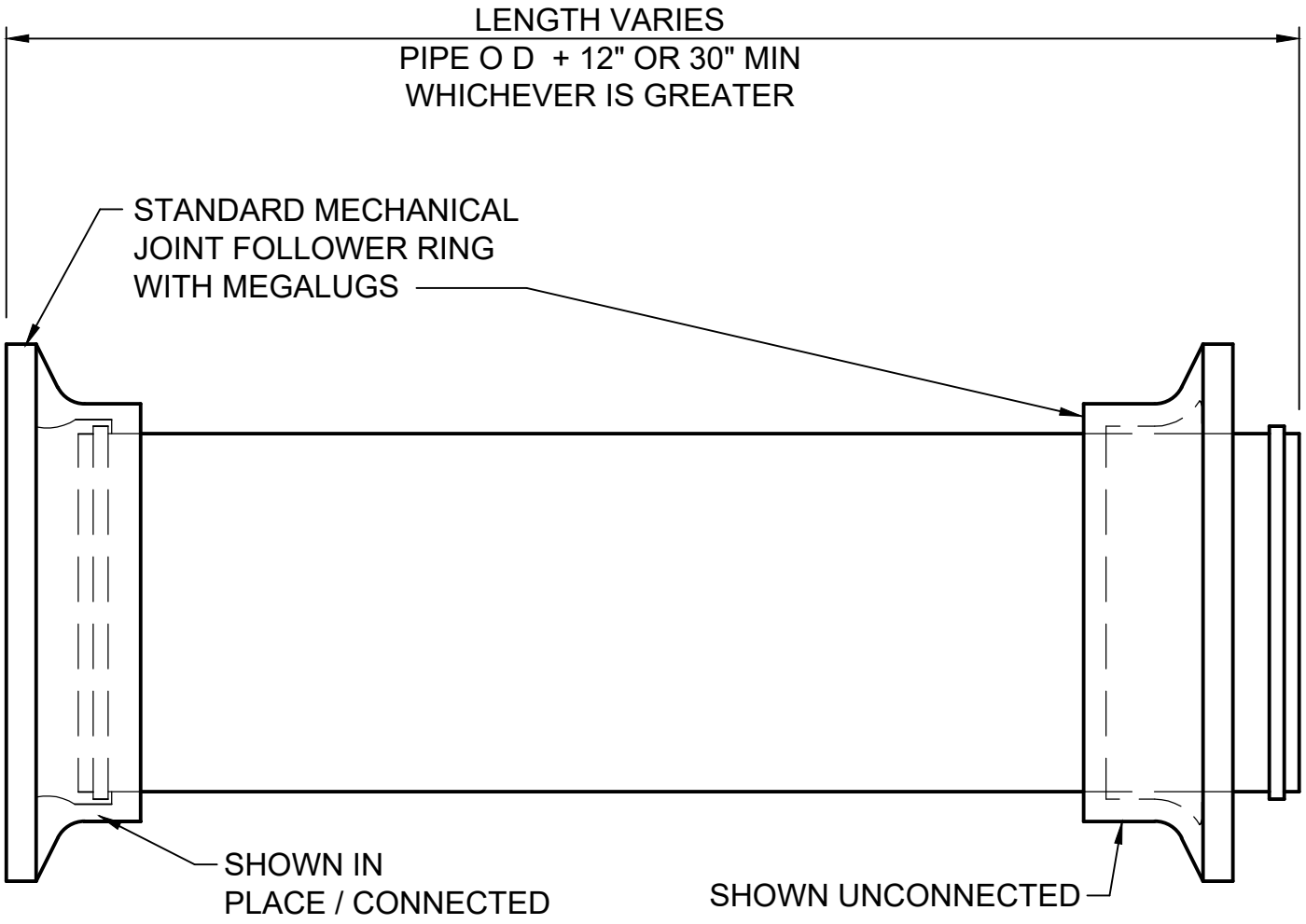

NOTE:

1. ANCHOR COUPLINGS ARE USED WITH MECHANICAL JOINT (MJ) FITTINGS TO SECURE A VALVE OR OTHER MECHANICAL JOINT FITTING TO AN OUTLET OR IN-LINE VALVE.
2. THE MECHANICAL JOINT FOLLOWER RING CAN FREELY MOVE ALONG PIPE BARREL BUT IS SECURED WITH MEGALUGS.

NOT TO SCALE

ANCHOR COUPLING	**CITY OF REPUBLIC, MO STANDARD DETAIL #2**	
	SPEC SECTION 331216	APRIL 2022

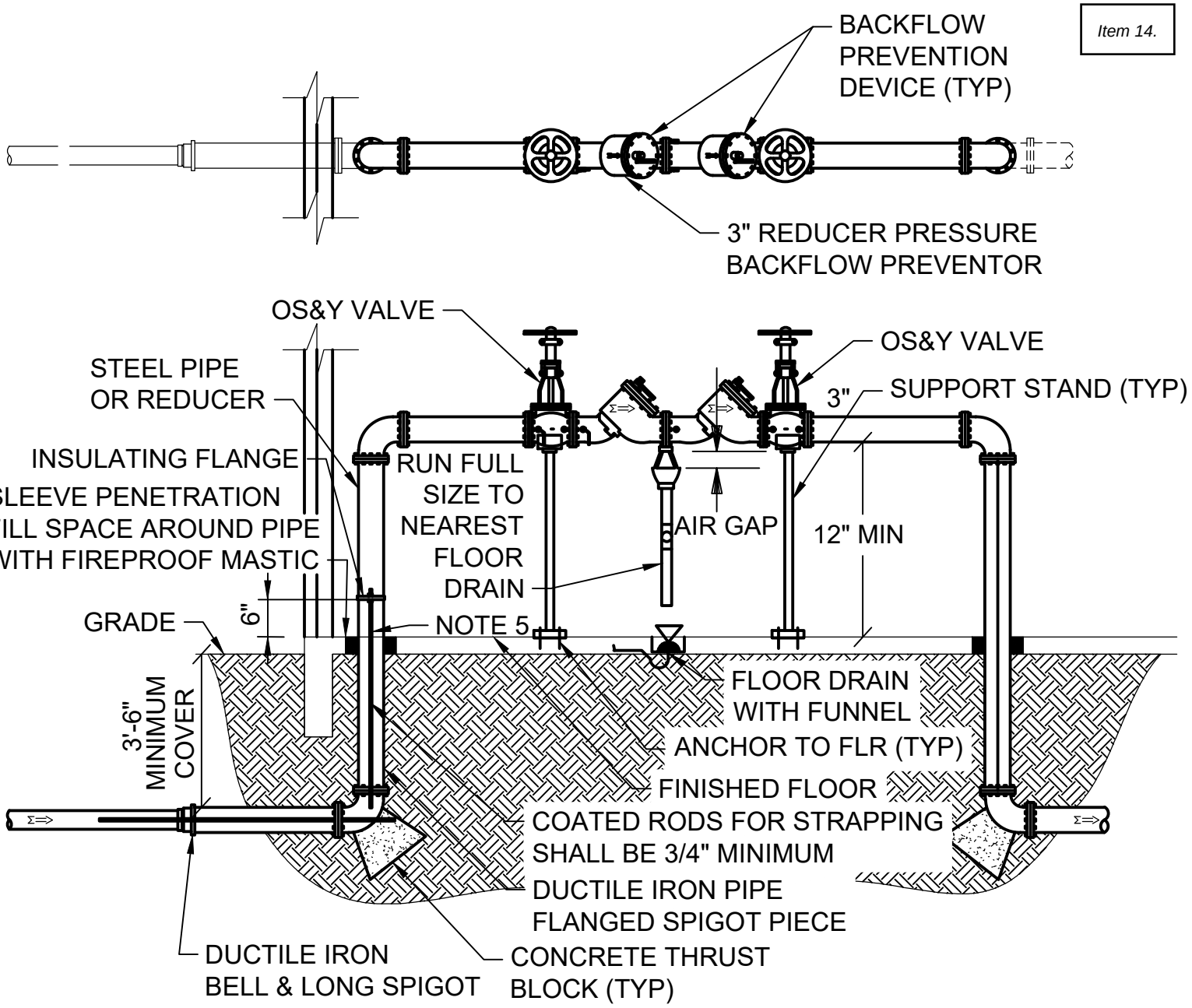

NOTES:

1. ALL PIPE AND FITTINGS SHALL BE SCHEDULE 80 PIPE OR HIGHER.

2. MECHANICAL JOINT FITTINGS SHALL BE REQUIRED UNDERGROUND AND FLANGED FITTINGS FOR ABOVE GROUND USE. NO UNIFLANGES PERMITTED.

3. PAINT THE ABOVE GROUND ASSEMBLY. INCLUDING ENTIRE LENGTH OF TIE RODS AS SPECIFIED. AFTER MANUFACTURER'S RECOMMENDED SURFACE PREP IS COMPLETED. DO NOT PAINT NAME/SERIAL PLATE OR BRASS FITTINGS.

4. FULL FACED NEOPRENE GASKETS SHALL BE REQUIRED ON ALL FLANGED FITTINGS.

5. TIE RODS AND NUTS TO BE EQUAL IN DIAMETER TO FLANGE BOLTS AND NUTS

BACKFLOW PREVENTER	**CITY OF REPUBLIC, MO STANDARD DETAIL #3**	
	SPEC SECTION 331216	APRIL 2022

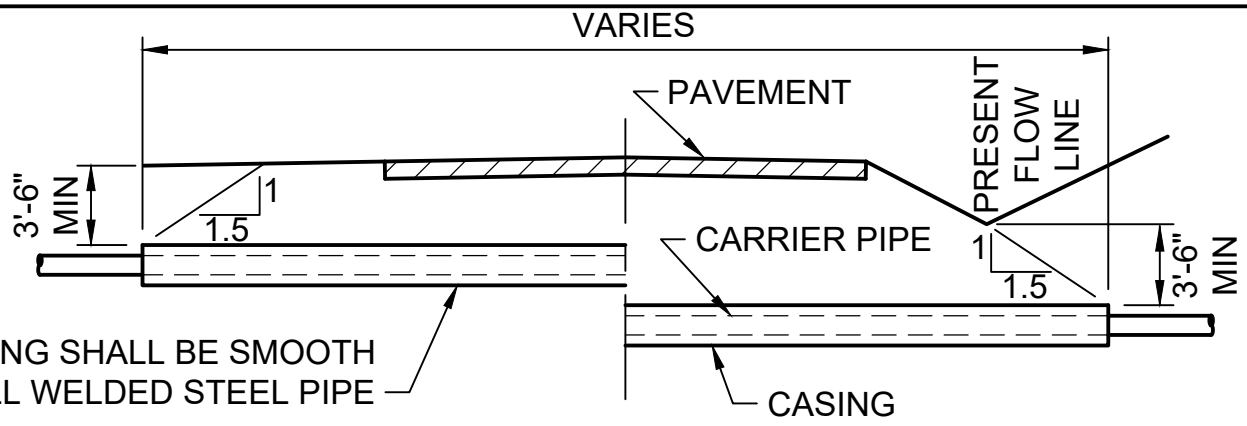

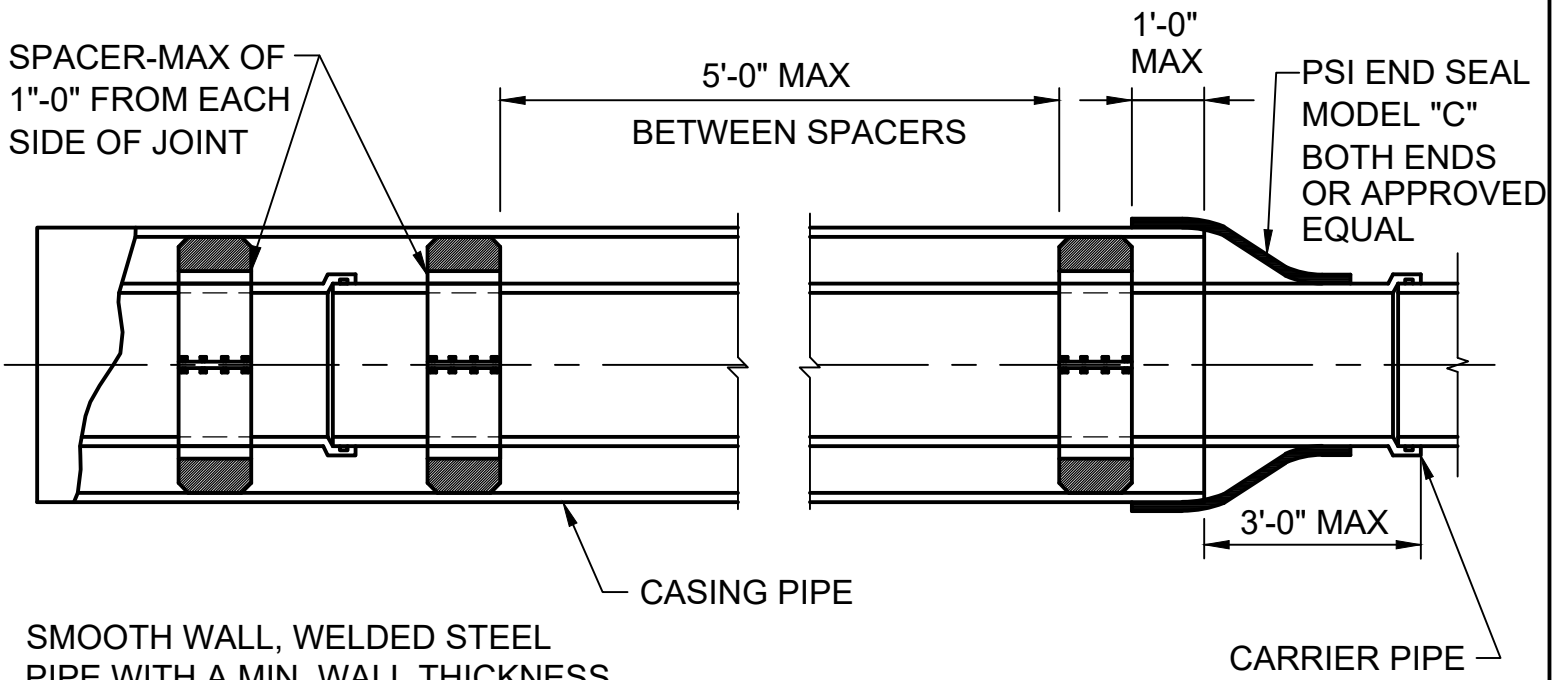

SMOOTH WALL, WELDED STEEL PIPE WITH A MIN. WALL THICKNESS AS FOLLOWS WILL BE PERMITTED:

CASING DIAMETER (INCHES)	MINIMUM WALL THICKNESS
6	0.280
8, 10, 12, 14, 16	0.250
18, 20, 22	0.250
24, 26	0.281
30, 32, 34	0.312
36, 38, 40, 48	0.344

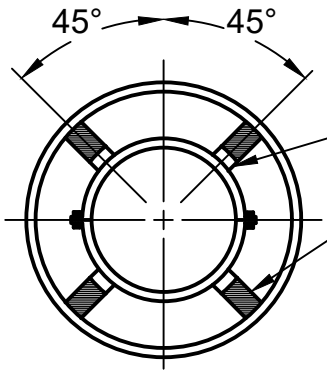

NOT TO SCALE

NOTES:

1. DEPTH OF BORING PIT SHALL BE AS REQUIRED.
2. THE DRILLED HOLE FOR THE CASING PIPE SHALL BE SLIGHTLY UNDERSIZED AND THE PIPE JACKED THROUGH TO ELIMINATE VOIDS BETWEEN PIPE AND HOLE.
3. BOTH ENDS OF CASING WILL BE SEALED AS PER MANUFACTURER'S RECOMMENDATION.
4. CASING PIPE SHALL BE NO SMALLER THAN 1.5 TIMES THE DIAMETER OF THE CARRIER PIPE.

BORING CASING PIPE AND END SEAL	**CITY OF REPUBLIC, MO STANDARD DETAIL #4**	
	SPEC SECTION 330524	JUNE 2022

ALL PIPE TO BE DUCTILE IRON

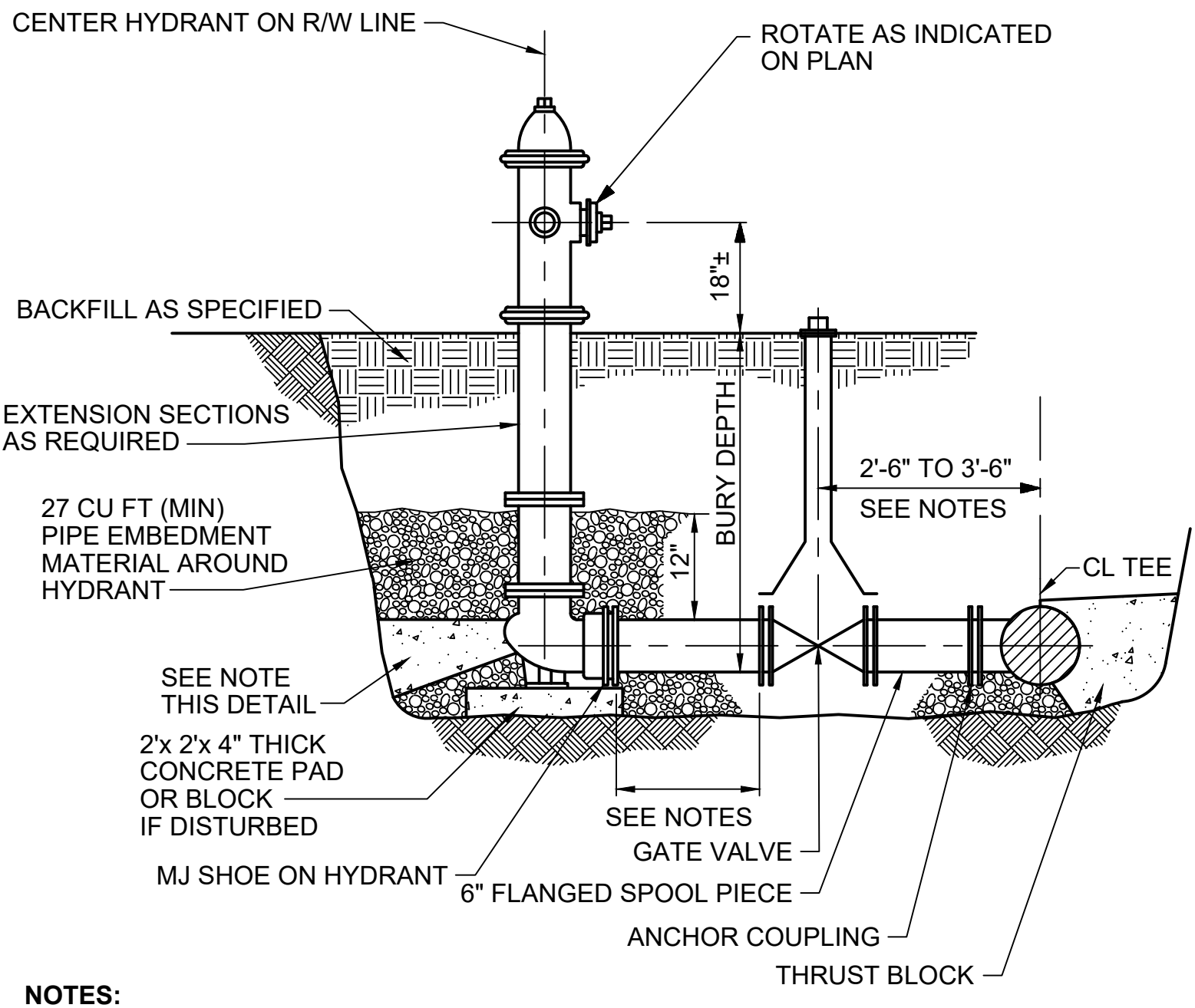

NOTES:

1) THRUST BLOCK REQUIRED WHEN HYDRANT AND VALVE ARE NOT RESTRAINED. DO NOT COVER HYDRANT DRAIN HOLES W/ CONC.
2) RIGID PIPE INCLUDES: FOSTER ADAPTER, FLAT FLANGE, DIP, ANCHOR
3) ACCEPTABLE RIGID PIPE SHALL BE DIP. ANY OTHER PROPOSED SHALL BE SUBMITTED TO THE CITY FOR APPROVAL.
4) IF VALVE IS LOCATED AT A DISTANCE OTHER THAN LENGTH SPECIFIED, CONTACT THE CITY FOR APPROVAL.

NOT TO SCALE

FIRE HYDRANT WITH ISOLATION VALVE (MAINS 5' DEEP OR LESS)	**CITY OF REPUBLIC, MO STANDARD DETAIL #5**	
	SPEC SECTION 331216	APRIL 2022

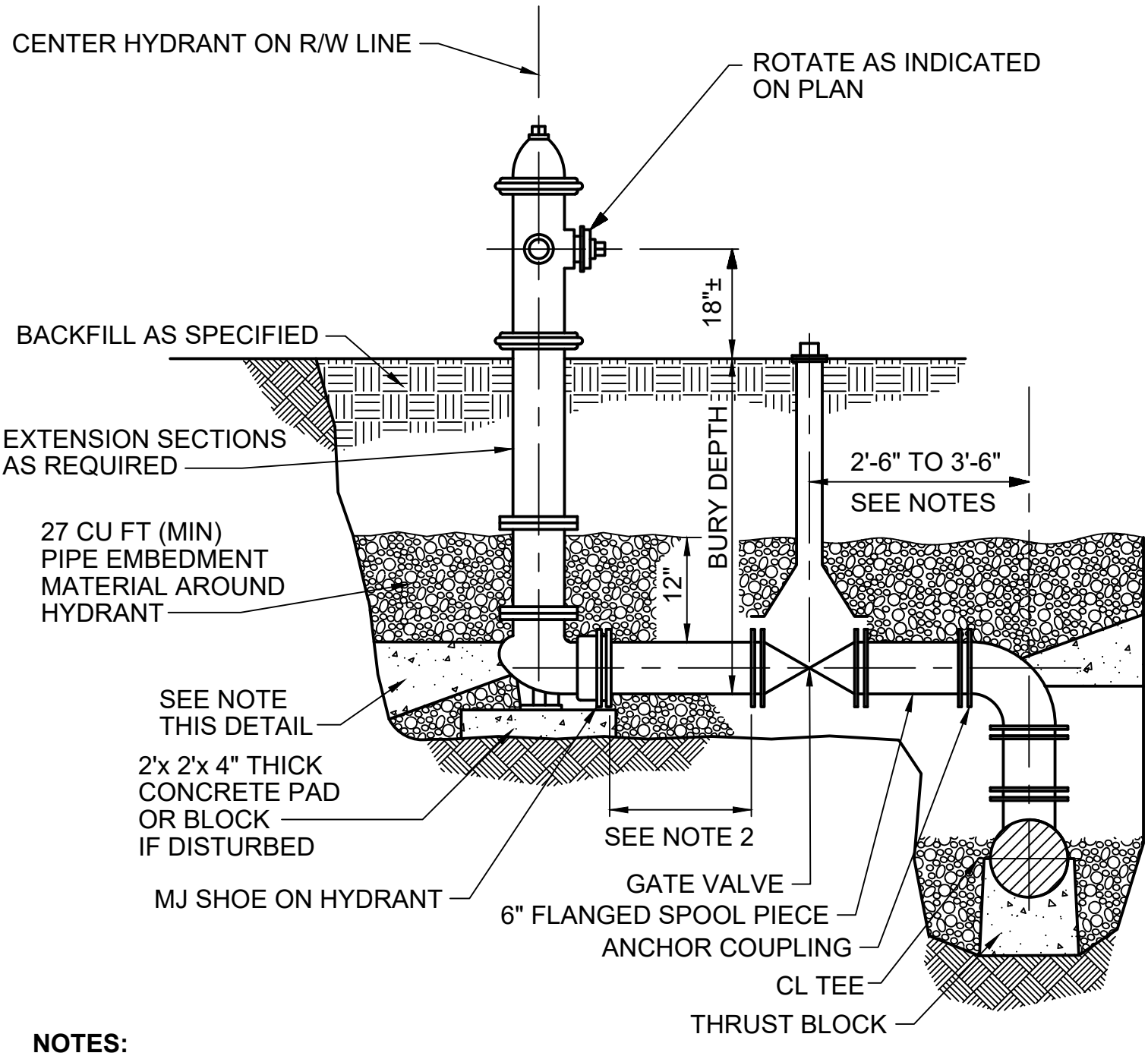

NOTES:

1) THRUST BLOCK REQUIRED WHEN HYDRANT AND VALVE ARE NOT RESTRAINED. DO NOT COVER HYDRANT DRAIN HOLES W/ CONC.
2) RIGID PIPE INCLUDES: FOSTER ADAPTER, FLAT FLANGE, DIP, ANCHOR
3) ACCEPTABLE RIGID PIPE SHALL BE DIP. ANY OTHER PROPOSED SHALL BE SUBMITTED TO THE CITY FOR APPROVAL.
4) IF VALVE IS LOCATED AT A DISTANCE OTHER THAN LENGTH SPECIFIED, CONTACT THE CITY FOR APPROVAL.

NOT TO SCALE

FIRE HYDRANT WITH ISOLATION VALVE FOR DEEP MAINS (MAINS DEEPER THAN 5')	**CITY OF REPUBLIC, MO STANDARD DETAIL #6**	
	SPEC SECTION 331216	APRIL 2022

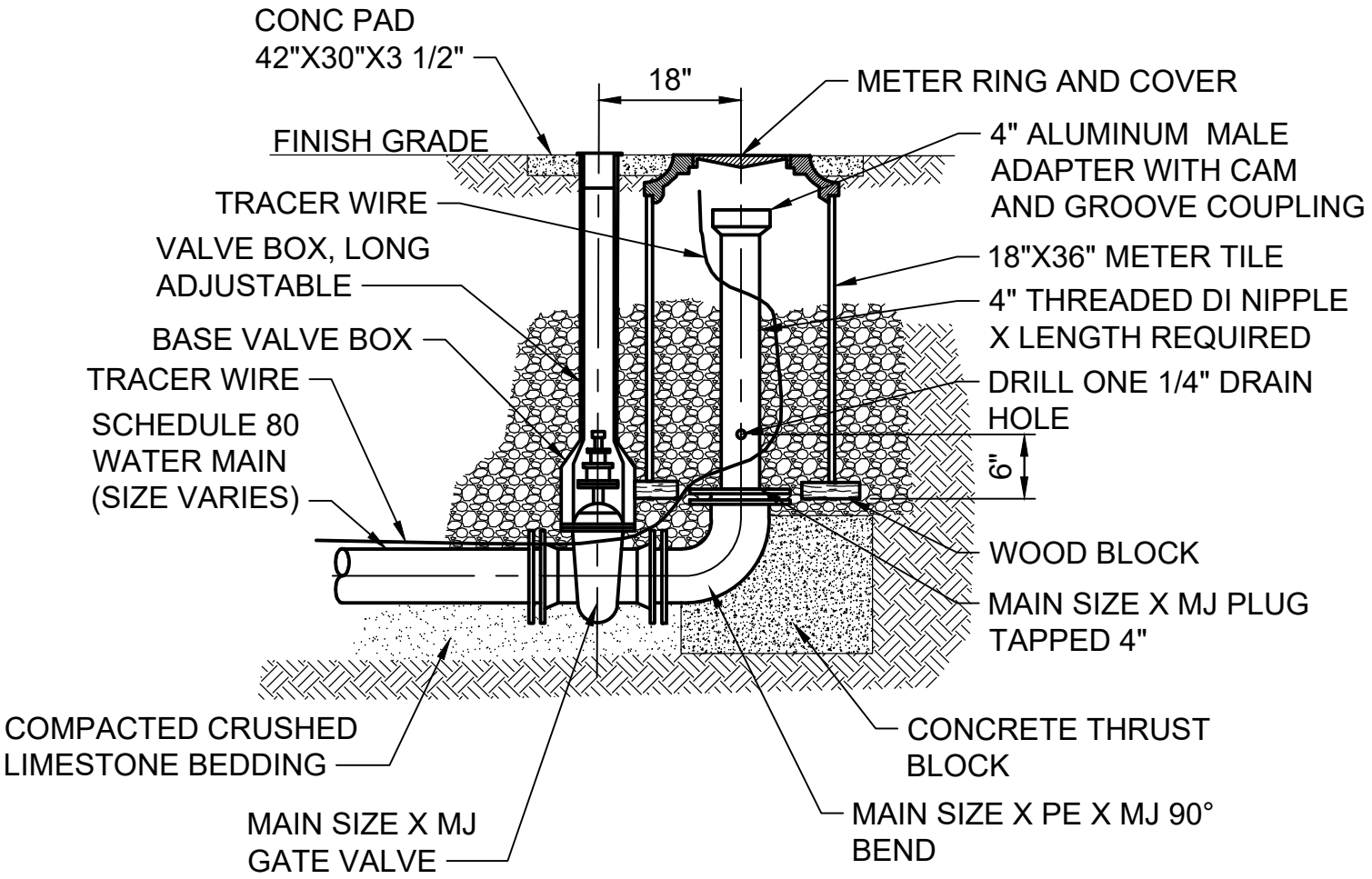

NOTES

1. PROTECT ALL JOINTS AND BOLTS FROM CONCRETE.
2. TRACER WIRE SHALL BE PLACED IN METER TILE BOX.
3. TILE TO BE BLOCKED TO REQUIRED GRADE.
4. WOOD BLOCKS SHALL BE A MINIMUM OF 2"X6"X18".

FLUSH VALVE ASSEMBLY	**CITY OF REPUBLIC, MO STANDARD DETAIL #7**	
	SPEC SECTION 331216	APRIL 2022

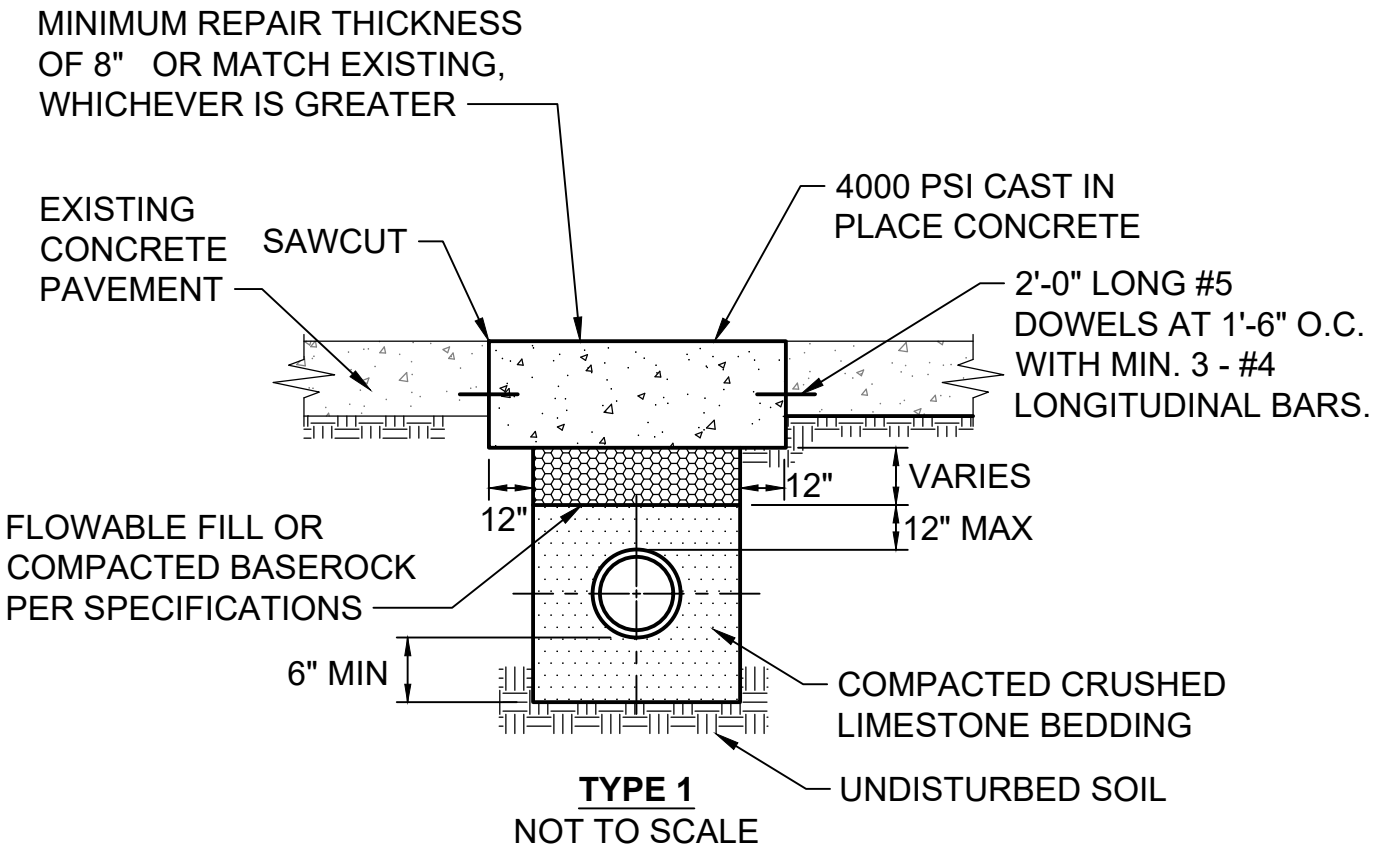

TYPE 1
NOT TO SCALE

NOTES

1. CITY OF REPUBLIC TO SPECIFY SPECIFIC FLOWABLE FILL MIX DESIGN, POUR TO TOP OF EXISTING ROADWAY FOR TEMPORARY DRIVING SURFACE.
2. COMPACTED DIRTY BASE MUST HAVE OPTIMAL MOISTURE CONTENT AND BE COMPACTED EVERY LIFT FOOT, TEMPORARY 3" COLD MIX ASPHALT OR UPM PATCH REQUIRED.

LAYING CONDITIONS FOR DUCTILE IRON PIPE TYPE 1 (UNDER DRIVING SURFACE)	**CITY OF REPUBLIC, MO STANDARD DETAIL #8**	
	SPEC SECTION 333150	JUNE 2022

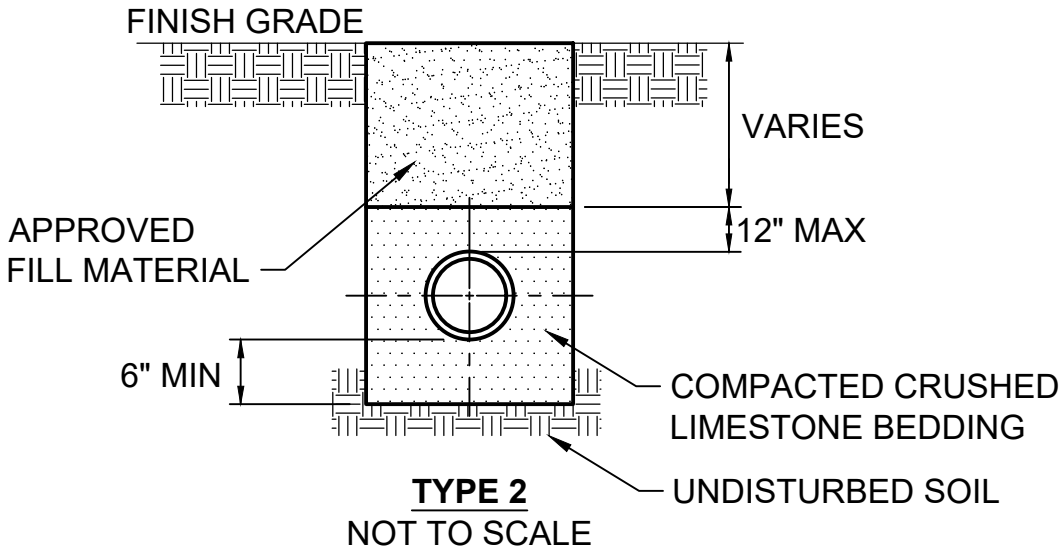

TYPE 2
NOT TO SCALE

LAYING CONDITIONS FOR DUCTILE IRON PIPE TYPE 2 (NOT UNDER DRIVING SURFACE)	CITY OF REPUBLIC, MO STANDARD DETAIL #9	
	SPEC SECTION 333150	APRIL 2022

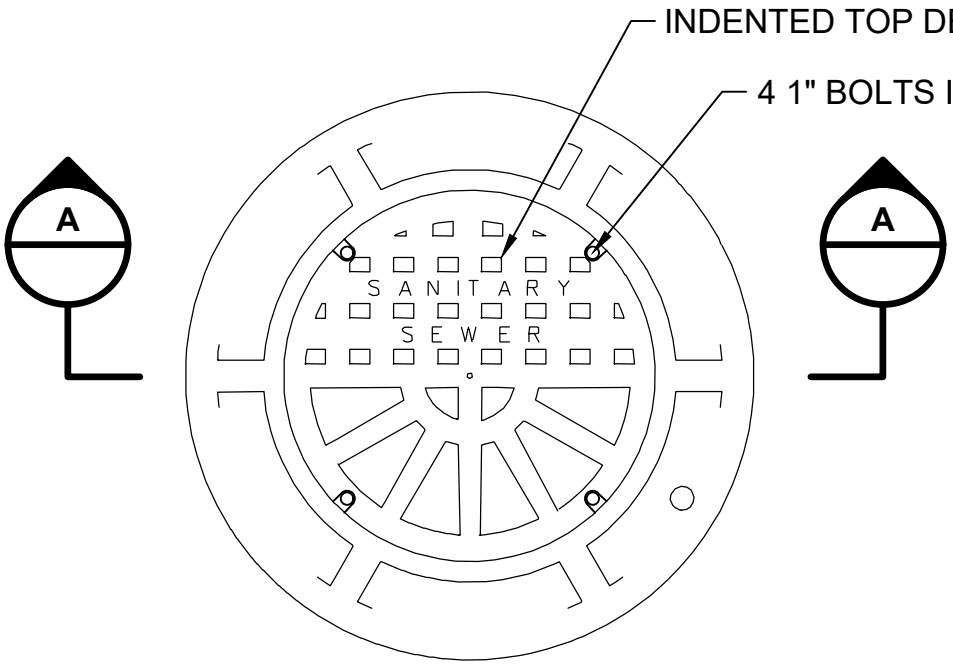

PLAN

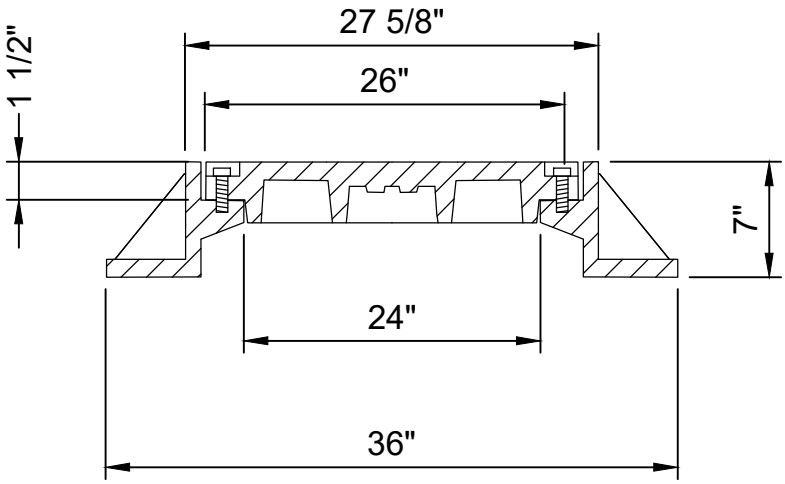

SECTION A

NOT TO SCALE

NOTE:

1. TYPE A WATERPROOF MANHOLE FRAME AND COVER FOR USE IN DRAINAGE AREAS.

2. NEENAH R-1916-F

MANHOLE FRAME AND COVER - TYPE A	**CITY OF REPUBLIC, MO STANDARD DETAIL #10**	
	SPEC SECTION 333900	APRIL 2022

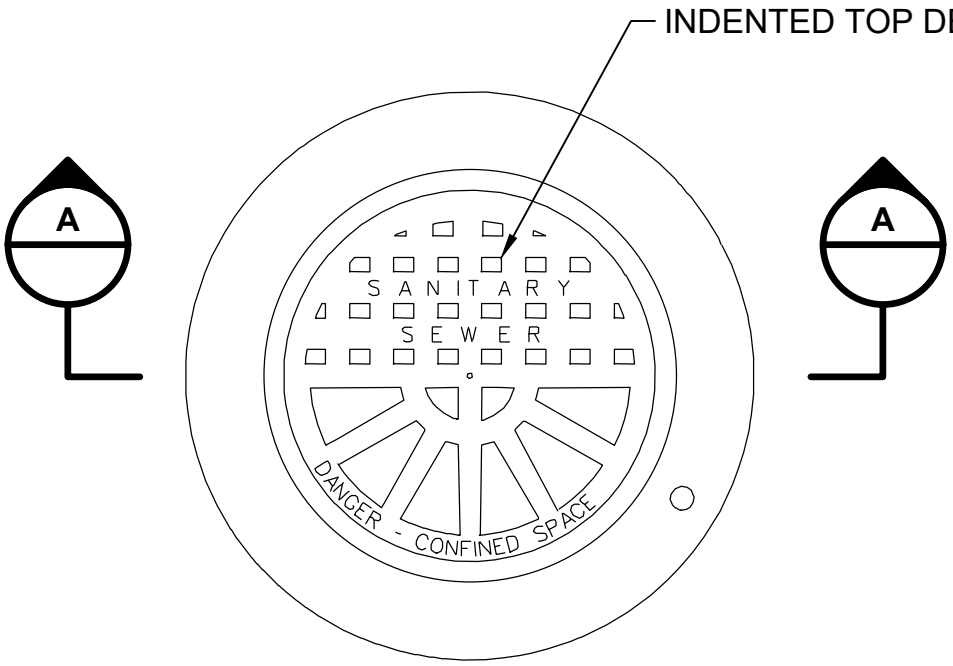

PLAN

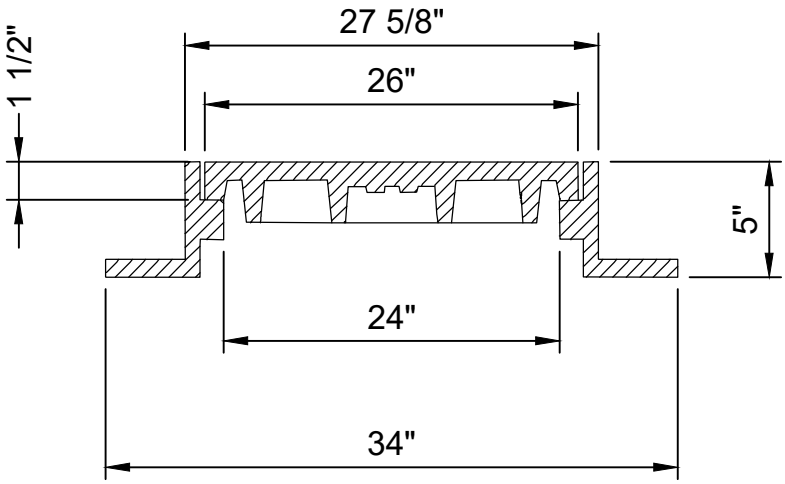

SECTION A

NOT TO SCALE

NOTE:

1. TYPE B MANHOLE FRAME AND COVER FOR STANDARD USE.
2. NEENAH R-1642-A WITH SELF SEALING LID AND CONCEALED PICKHOLE.

MANHOLE FRAME AND COVER - TYPE B	**CITY OF REPUBLIC, MO STANDARD DETAIL #11**	
	SPEC SECTION 333900	APRIL 2022

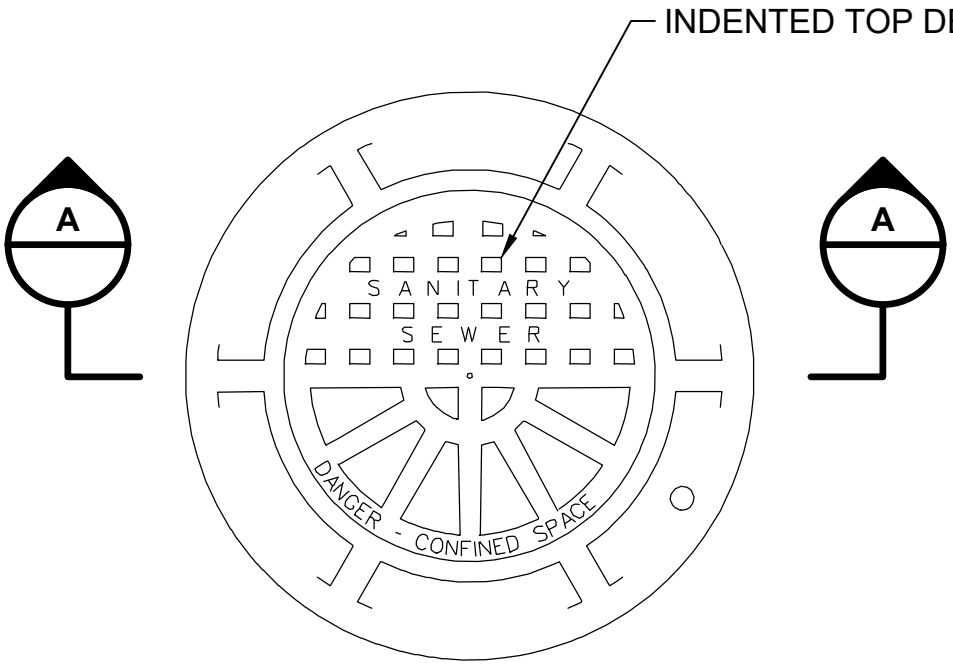

PLAN

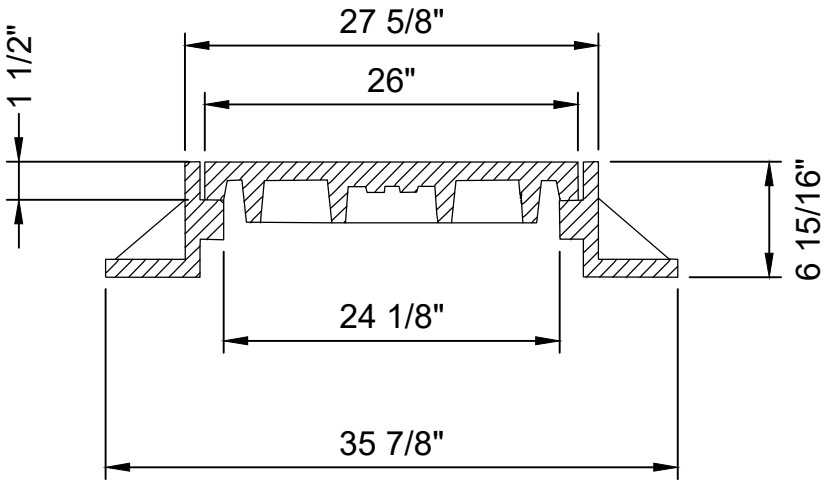

SECTION A

NOT TO SCALE

NOTE:

1. TYPE C MANHOLE FRAME AND COVER FOR USE IN DRIVING AREAS.
2. NEENAH R-1642 WITH NON-ROCKING TYPE LID.

MANHOLE FRAME AND COVER - TYPE C	**CITY OF REPUBLIC, MO STANDARD DETAIL #12**	
	SPEC SECTION 333900	APRIL 2022

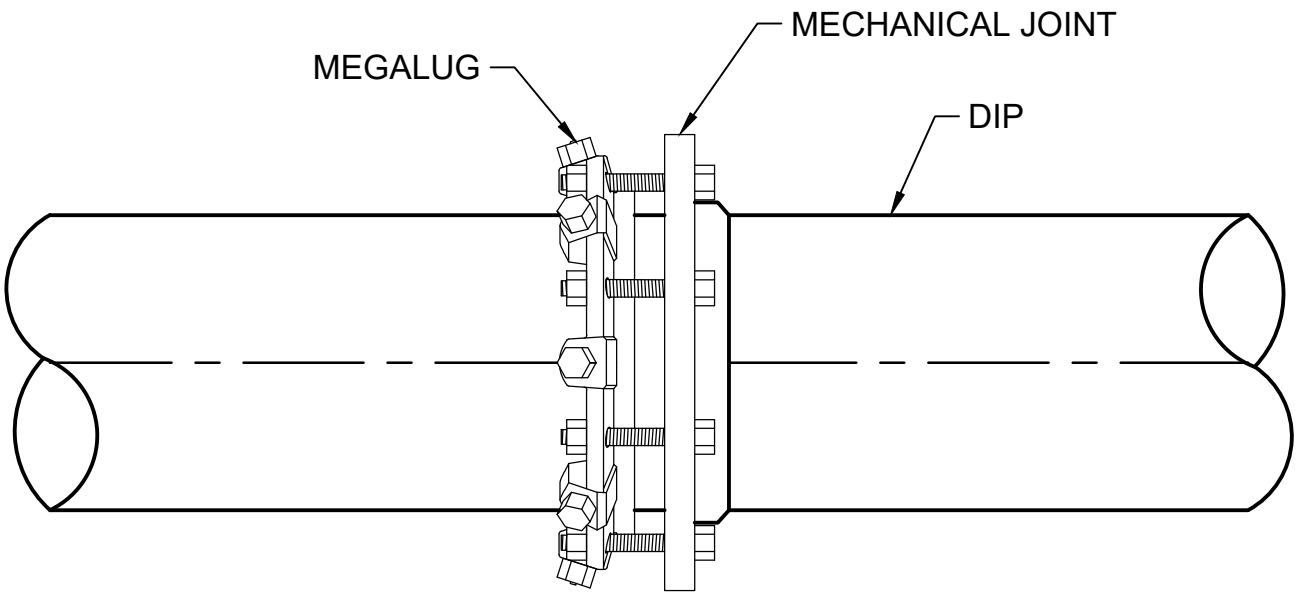

NOT TO SCALE

MEGALUG	CITY OF REPUBLIC, MO STANDARD DETAIL #13	
	SPEC SECTION 331100	APRIL 2022

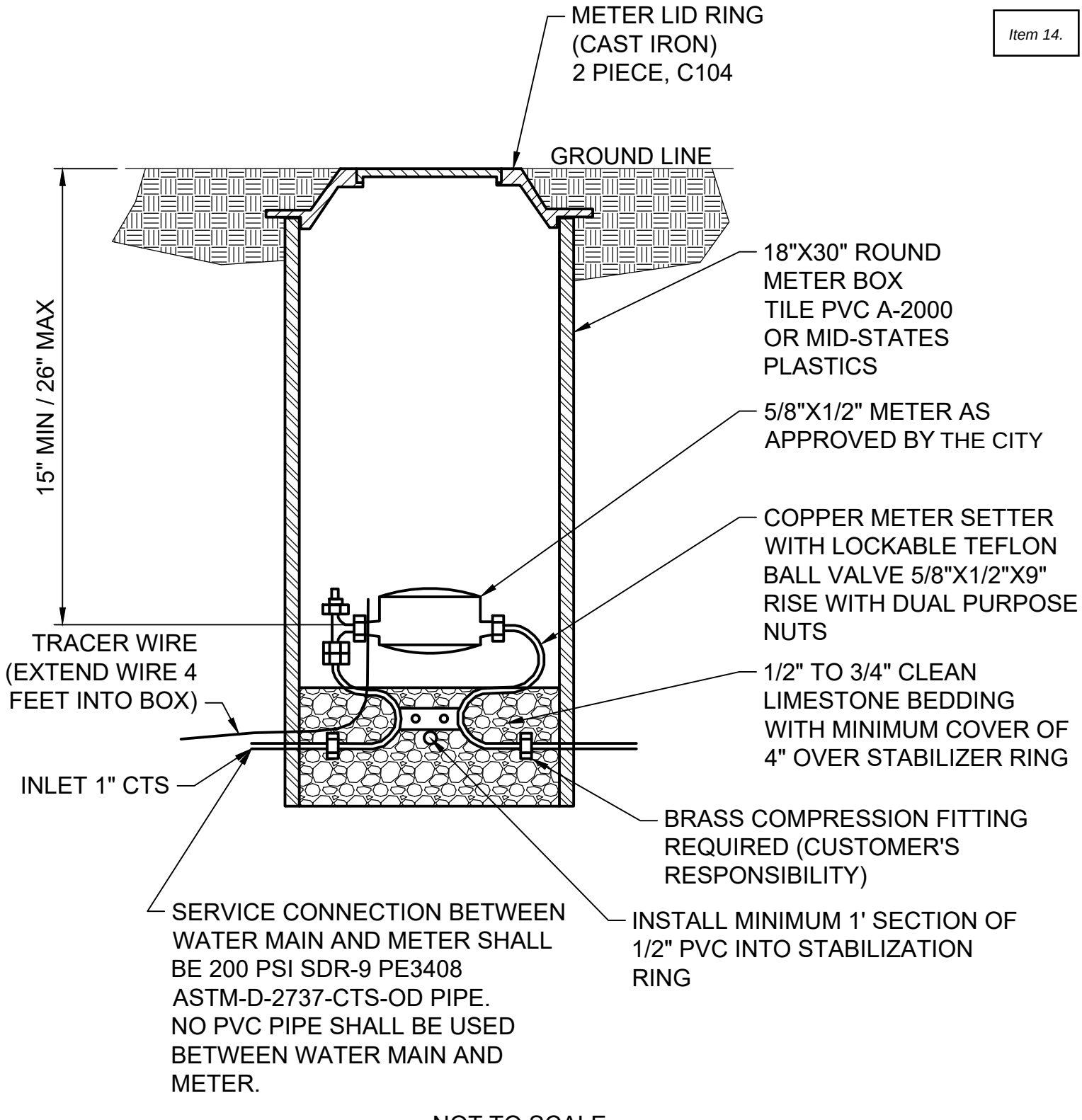

NOT TO SCALE

NOTE:

1. 1" METERS REQUIRE A 24" PIT. 1-1/2" AND LARGER METERS REQUIRE A 36" PIT OR MAY BE PLACED IN A VAULT.
2. TOP OF METER IN ALL APPLICATIONS SHOULD BE NO DEEPER THAN 24".

RESIDENTIAL WATER METER BOX INSTALLATION	**CITY OF REPUBLIC, MO STANDARD DETAIL #14**	
	SPEC SECTION 331216	APRIL 2022

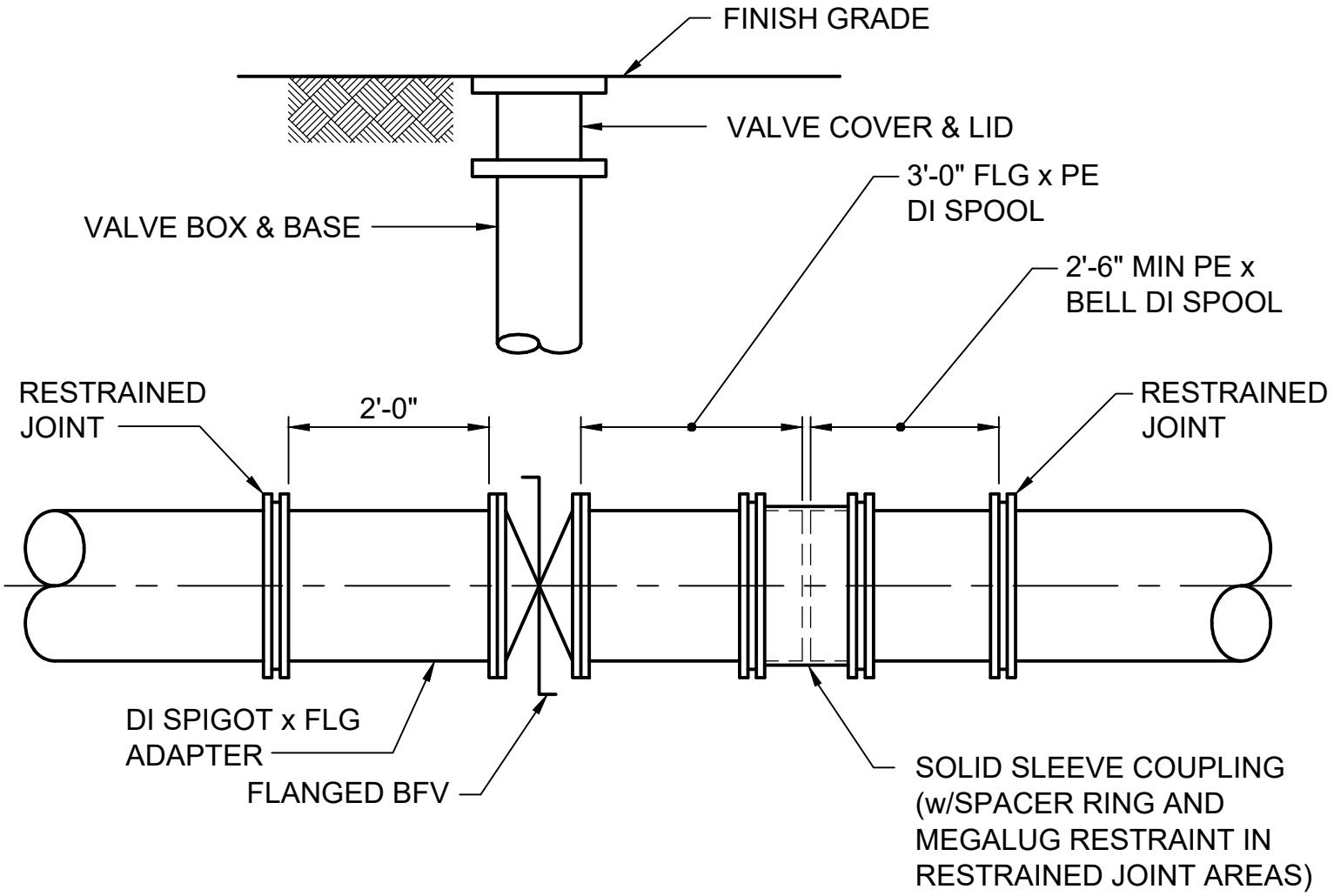

NOT TO SCALE

NOTE:

1. SOLID SLEEVE SHALL HAVE A BODY LAYING LENGTH OF 15" MIN.

RESTRAINED LINE VALVE INSTALLATION	**CITY OF REPUBLIC, MO STANDARD DETAIL #15**	
	SPEC SECTION 331216	APRIL 2022

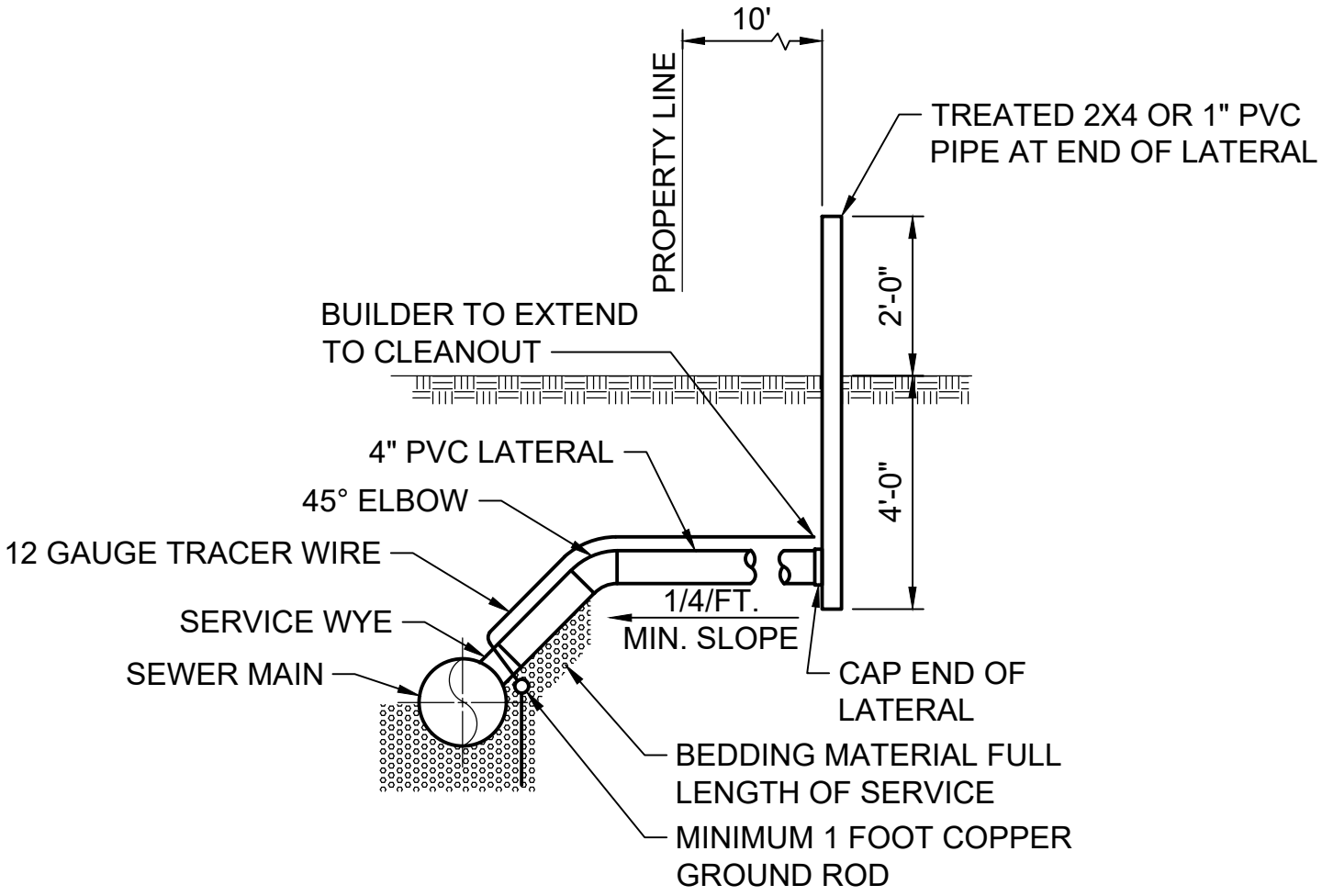

CONNECTION TO SEWER LINE

NOT TO SCALE

NOTE:

1. TEES ARE REQUIRED FOR ALL LATERALS ON NEW SEWER LINES. ALL LATERALS SHALL BE SCHEDULE 40 PVC PIPE AND JOINTS SHALL BE GLUED WITH AN APPROVED ADHESIVE.

SEWER SERVICE CONNECTION	**CITY OF REPUBLIC, MO STANDARD DETAIL #16**	
	SPEC SECTION 221313	APRIL 2022

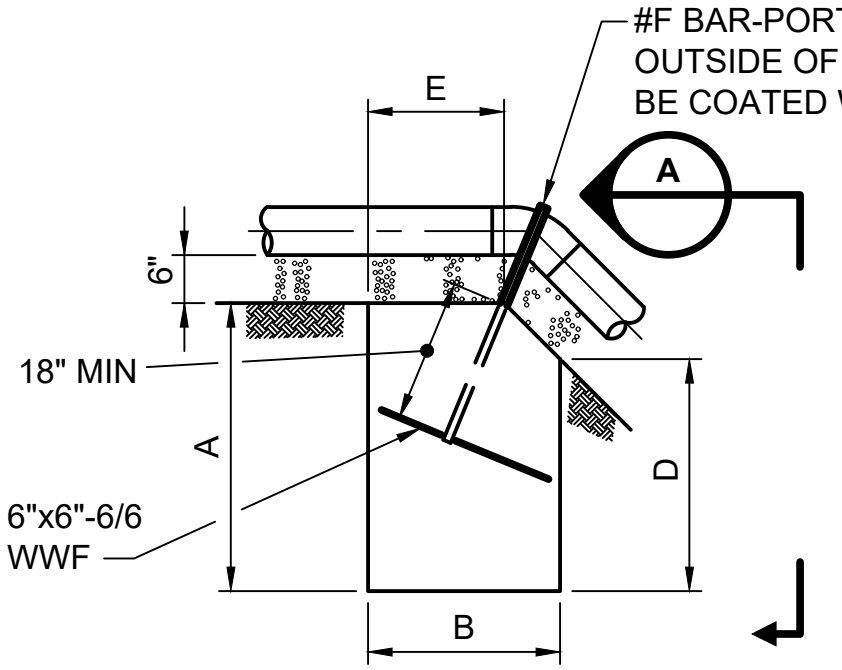

PROFILE

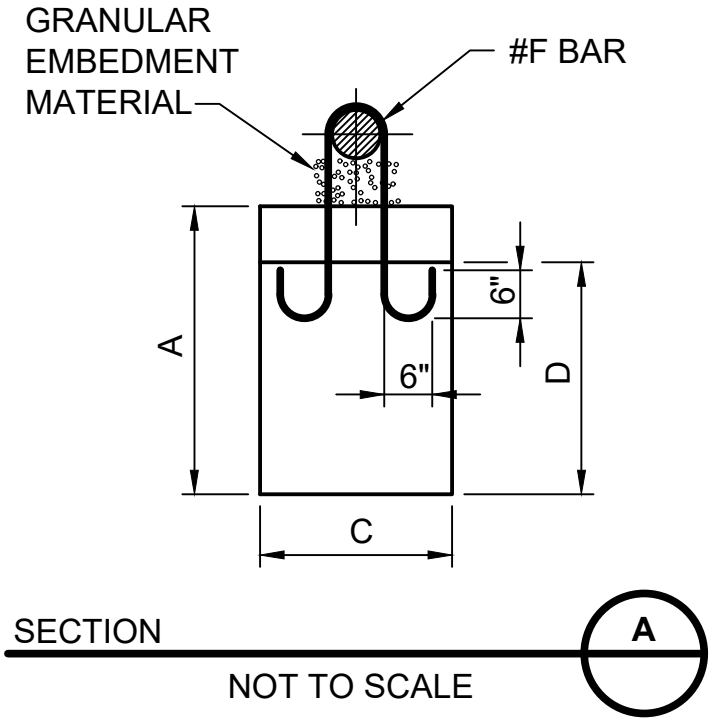

SECTION A

NOT TO SCALE

GRAVITY BLOCK SCHEDULE							
SIZE	FITTING	A	B	C	D	E	F
-	-	-	-	-	-	-	-

SLOPE ANCHOR

CITY OF REPUBLIC, MO
STANDARD DETAIL #17

SPEC SECTION 333150

APRIL 2022

REPUBLIC BUILDS Public Works · Community Development

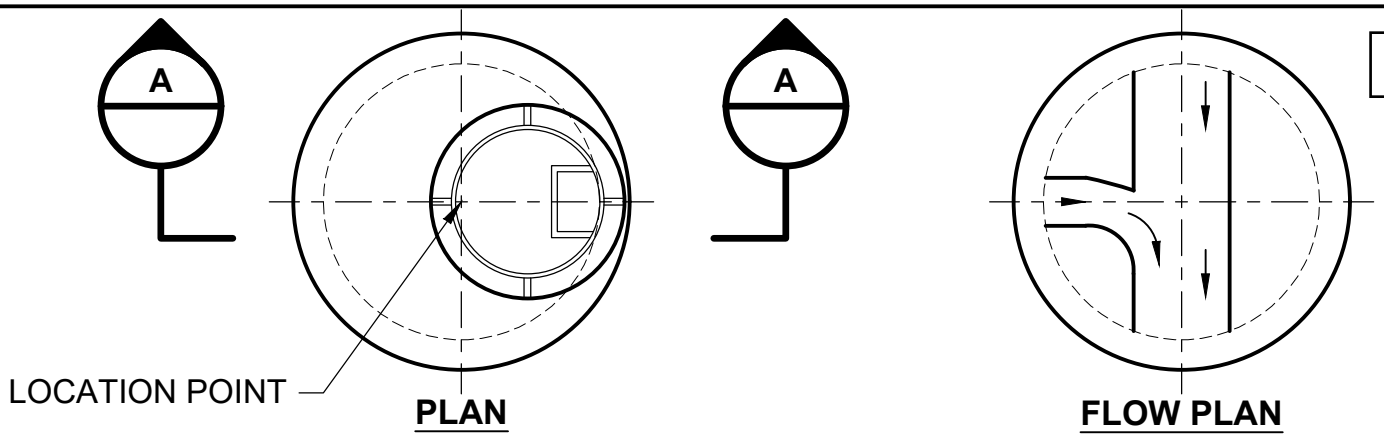

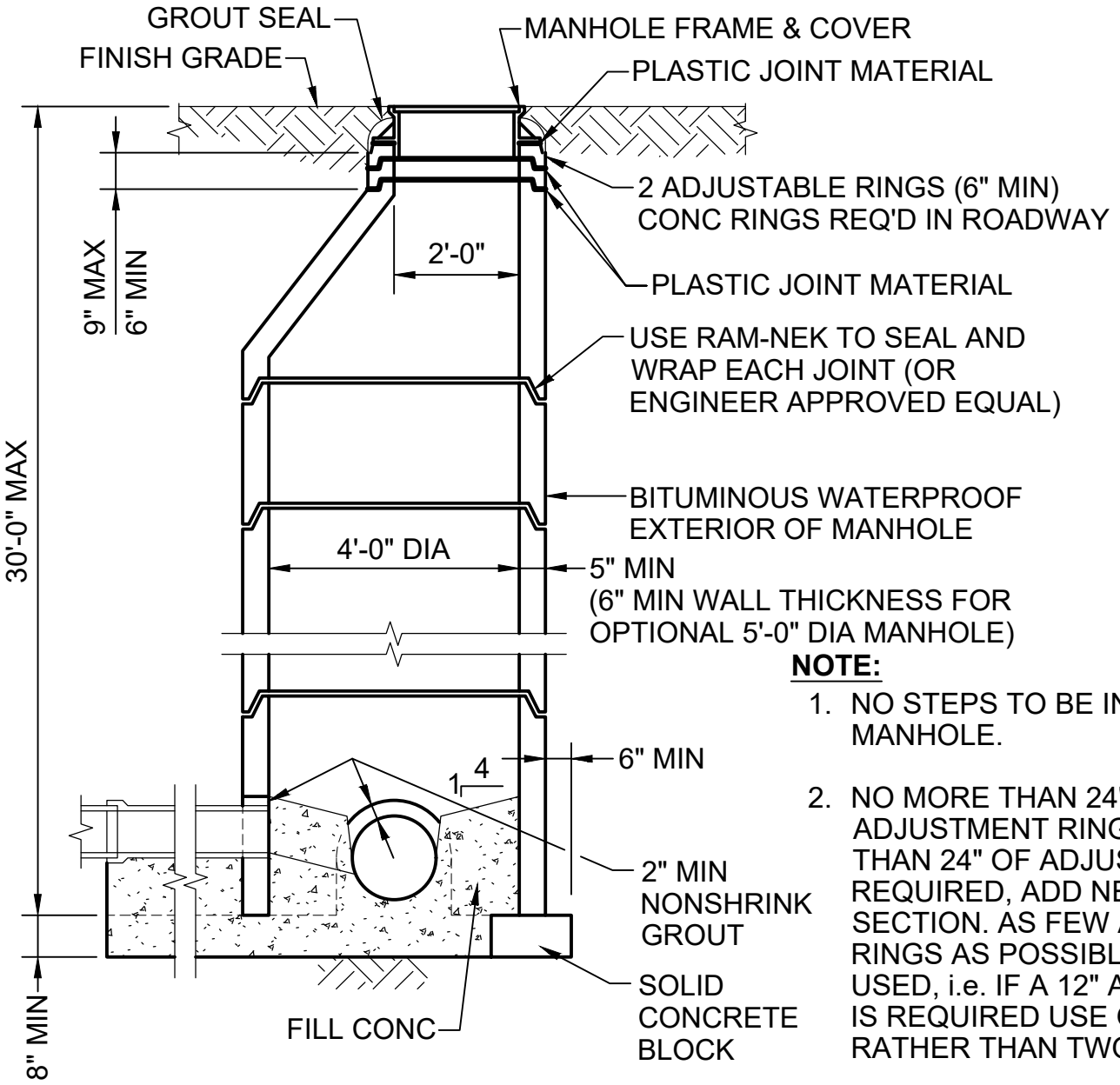

SECTION A

NOTE:

1. NO STEPS TO BE INSTALLED IN MANHOLE.
2. NO MORE THAN 24" OF ADJUSTMENT RINGS, IF MORE THAN 24" OF ADJUSTMENT IS REQUIRED, ADD NEW BARREL SECTION. AS FEW ADJUSTMENT RINGS AS POSSIBLE SHOULD BE USED, i.e. IF A 12" ADJUSTMENT IS REQUIRED USE ONE 12" RING RATHER THAN TWO 6" RINGS.
3. ACCEPTABLE RING TYPES INCLUDE CONCRETE, POLYPROPELENE, OR APPROVED EQUAL.

STANDARD MANHOLE DETAIL	**CITY OF REPUBLIC, MO** **STANDARD DETAIL #18**	
	SPEC SECTION 333900	APRIL 2022

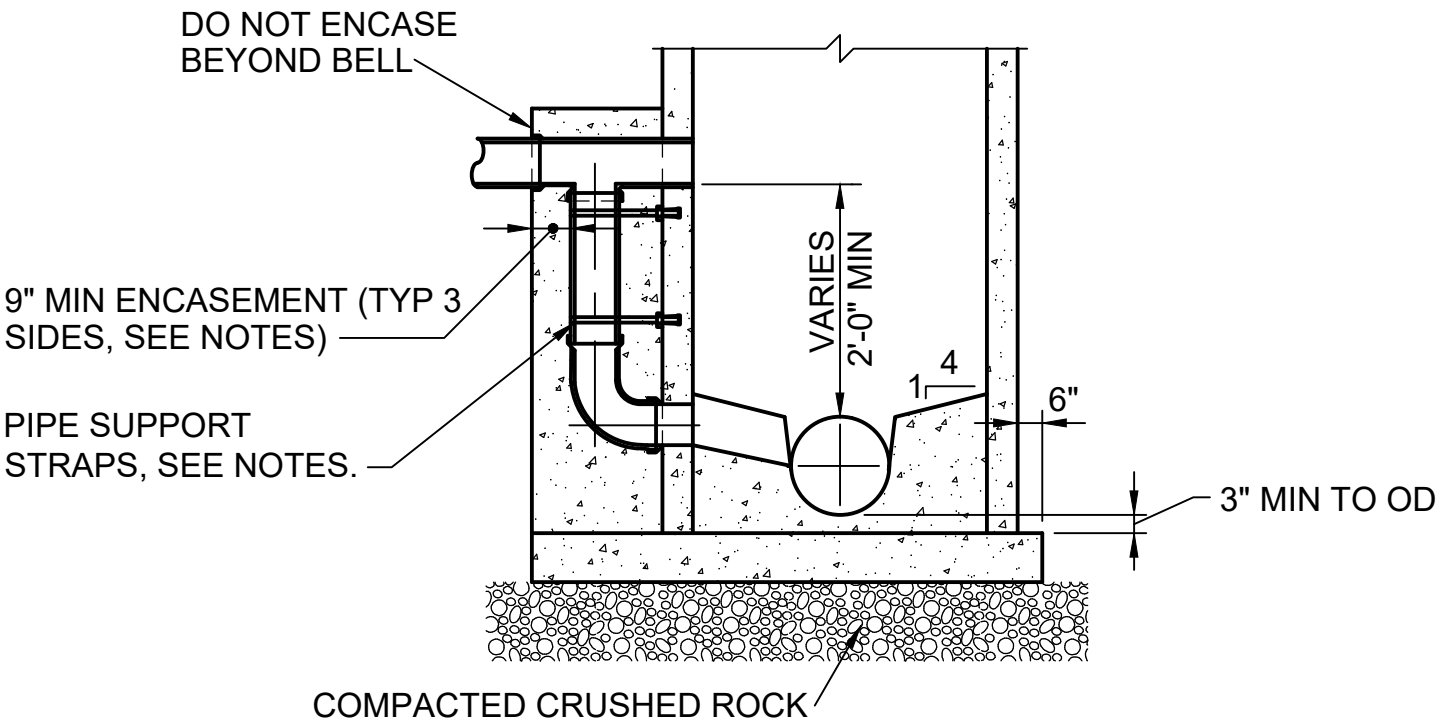

NOTES:

1. MATCH CROWN OF DROP PIPE INLET WITH CROWN OF OUTLET PIPE.
2. ENCASEMENT SHALL BE CONTROLLED LOW-STRENGTH MATERIAL (CLSM) OR FLOWABLE FILL REQUIRING CITY APPROVAL.
3. PIPE SUPPORTS SHALL BE STAINLESS STEEL AND CORROSIVE RESISTANT, PLACED AT 5'-0" O.C. MINIMUM. ADDITIONAL STRAPS MAY BE INSTALLED TO PROVIDE ADDITIONAL PIPE SUPPORT PRIOR TO PLACEMENT OF CLSM.

DROP MANHOLE DETAIL
NOT TO SCALE

STANDARD OUTSIDE DROP MANHOLE DETAIL	**CITY OF REPUBLIC, MO STANDARD DETAIL #19**	
	SPEC SECTION 333900	APRIL 2022

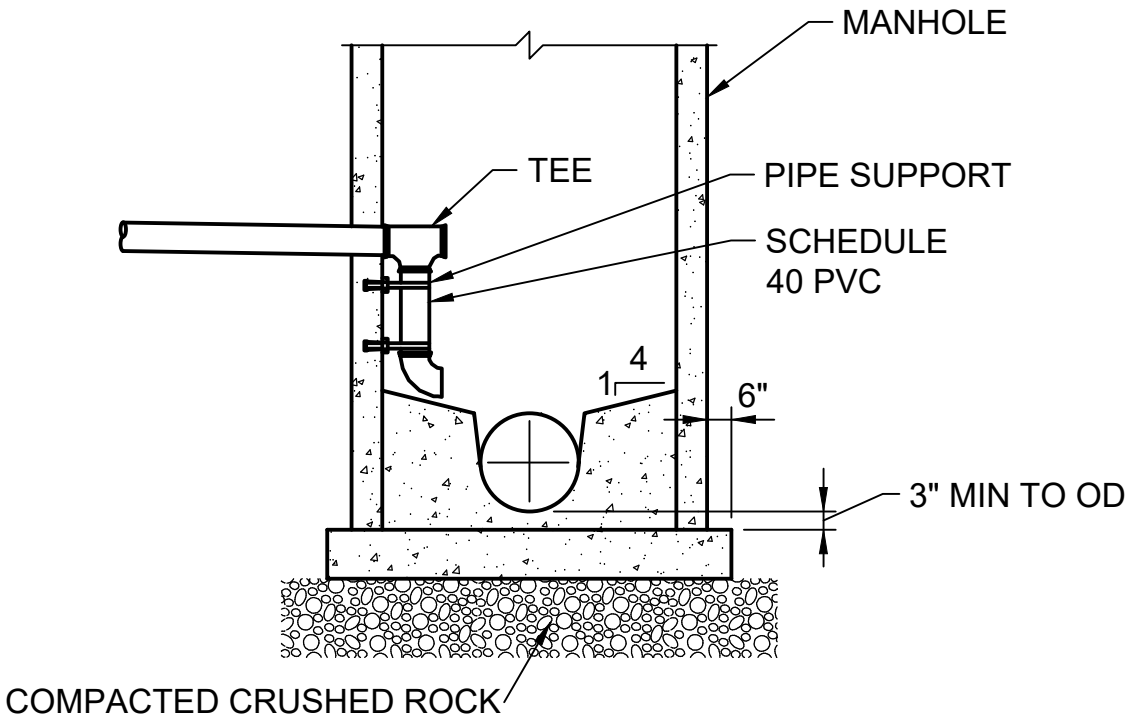

NOTE:

1. DROP TYPE TAP IS REQUIRED WHEN DISTANCE FROM SERVICE LINE FLOW LINE TO MANHOLE FLOW LINE EXCEEDS 2-FEET.

2. INSIDE DROPS ONLY ALLOWABLE ON MANHOLES WITH INSIDE DIAMETER 5' OR GREATER.

DROP MANHOLE DETAIL

NOT TO SCALE

STANDARD INSIDE DROP MANHOLE DETAIL	**CITY OF REPUBLIC, MO STANDARD DETAIL #20**	
	SPEC SECTION 333900	APRIL 2020

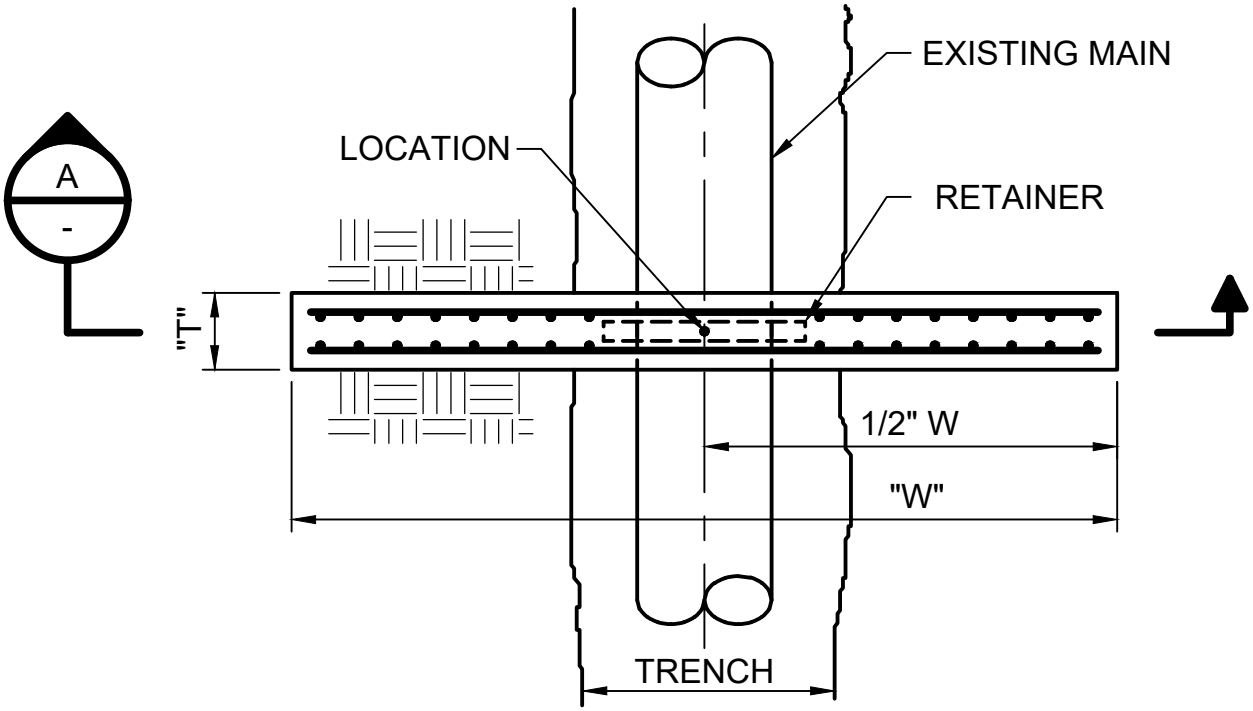

PLAN
NOT TO SCALE

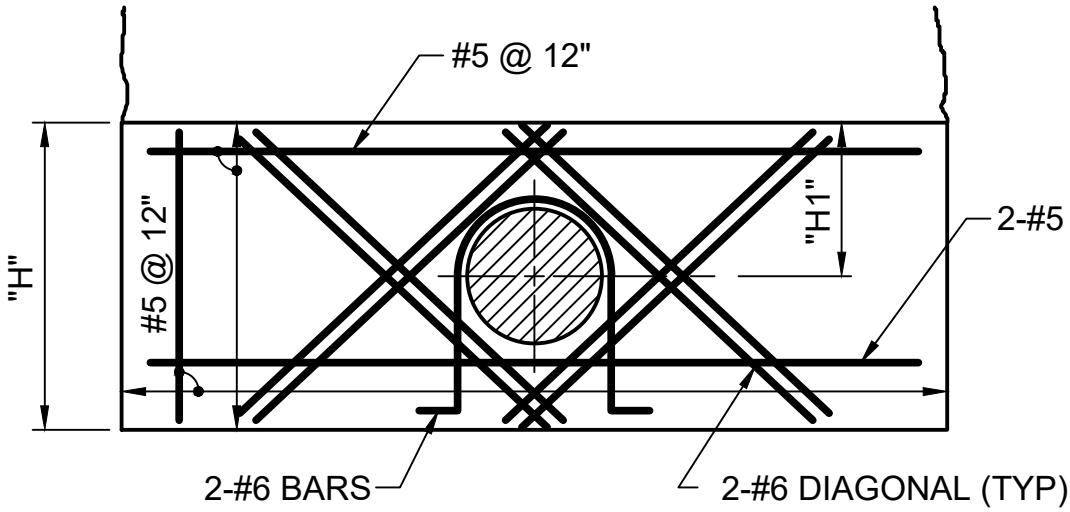

SECTION
NOT TO SCALE

A
-

STRADDLE BLOCK SCHEDULE				
LOCATION	"W"	"H"	"H1"	"T"

NOTE:

RETAINER MAY BE A MEGALUG RING FOR DUCTILE IRON PIPE. INSTALLATIONS OR A FABRICATED RING FOR PRESTRESSED CONCRETE CYLINDER PIPE INSTALLATIONS.

STRADDLE BLOCK	**CITY OF REPUBLIC, MO** **STANDARD DETAIL #21**	
	SPEC SECTION 331100	APRIL 2022

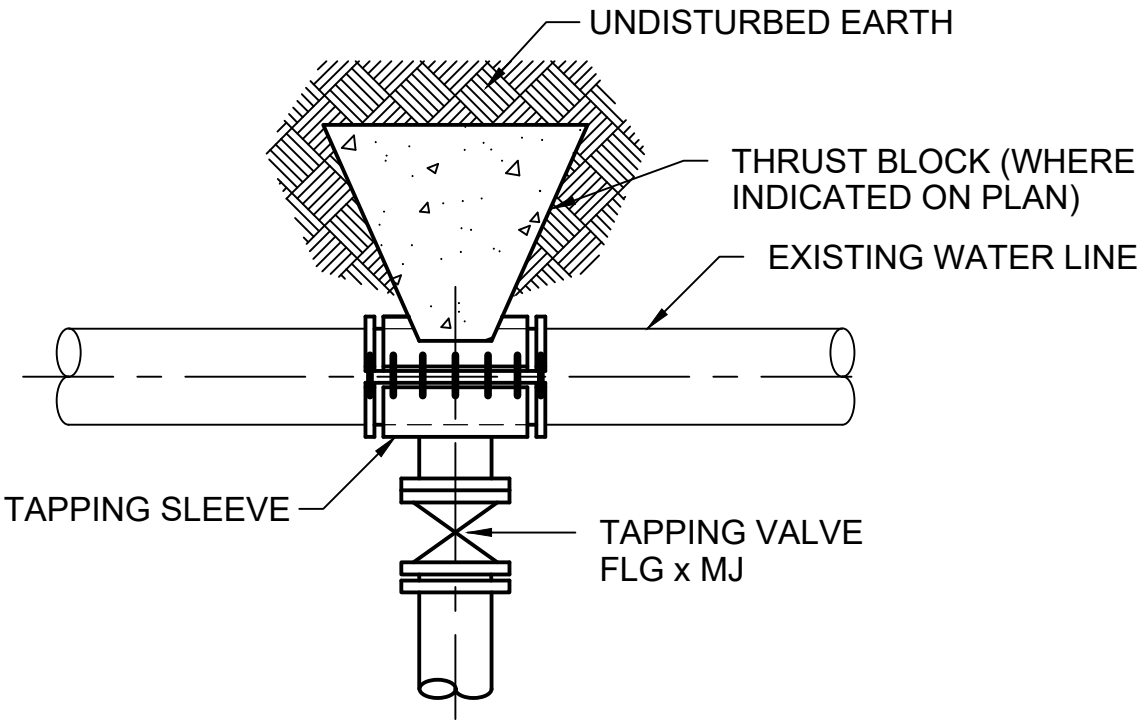

TAPPING SLEEVE AND VALVE DETAIL

NOT TO SCALE

TAPPING SLEEVE AND VALVE	**CITY OF REPUBLIC, MO STANDARD DETAIL #22**	
	SPEC SECTION 331216	APRIL 2022

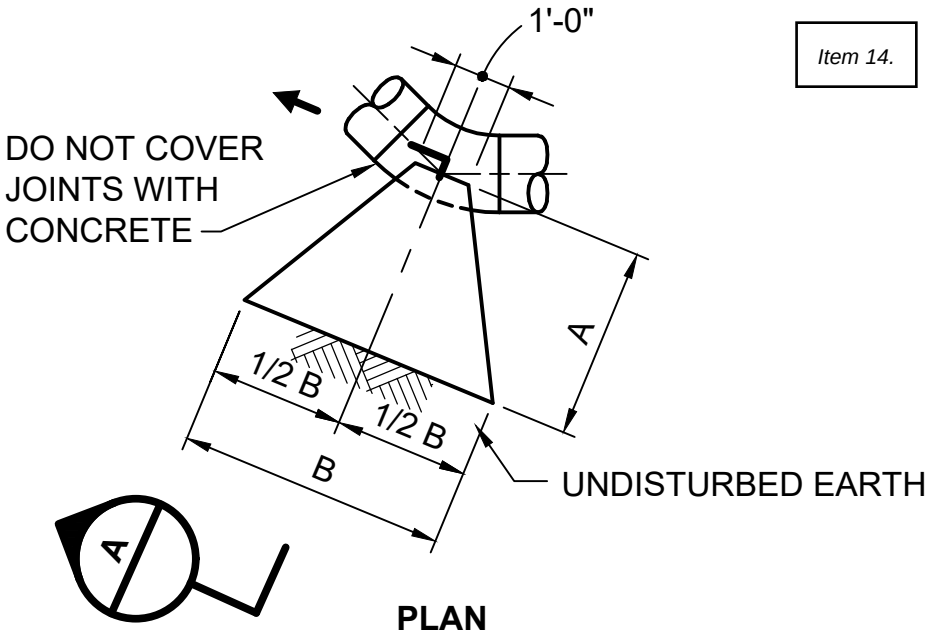

PLAN

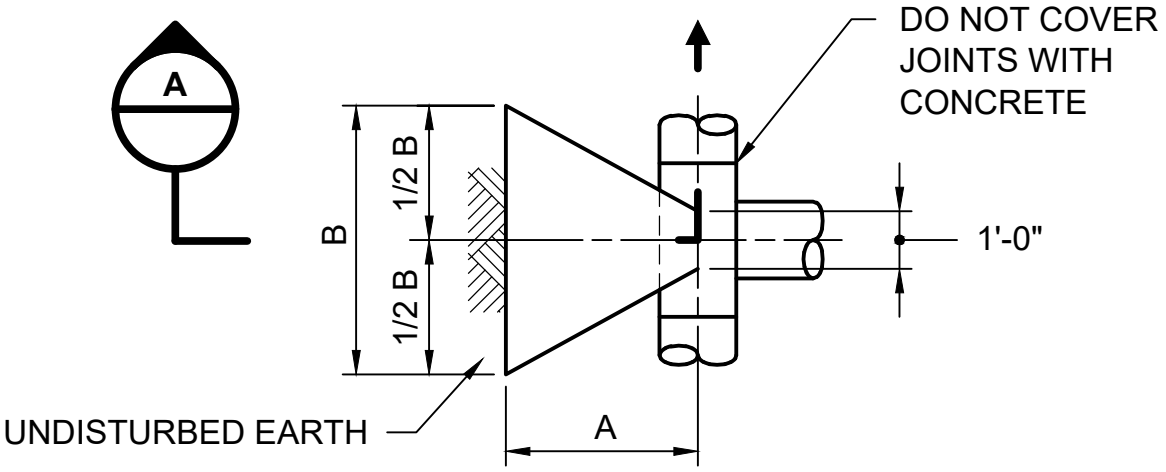

PLAN

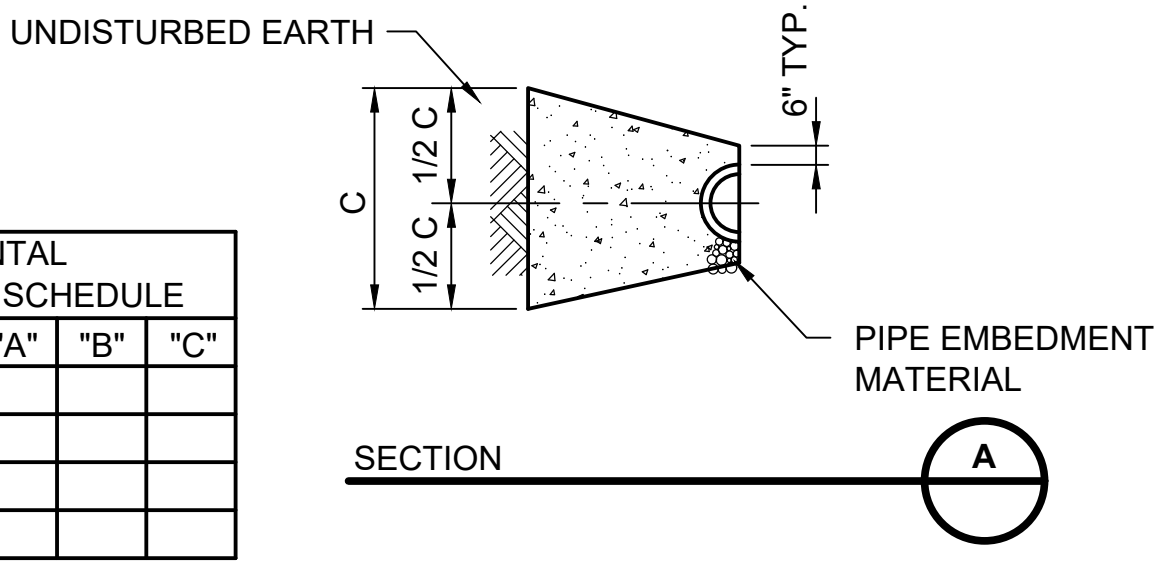

HORIZONTAL THRUST BLOCK SCHEDULE				
SIZE	FITTING	"A"	"B"	"C"

THRUST BLOCK	**CITY OF REPUBLIC, MO STANDARD DETAIL #23**	
	SPEC SECTION 333150	APRIL 2022

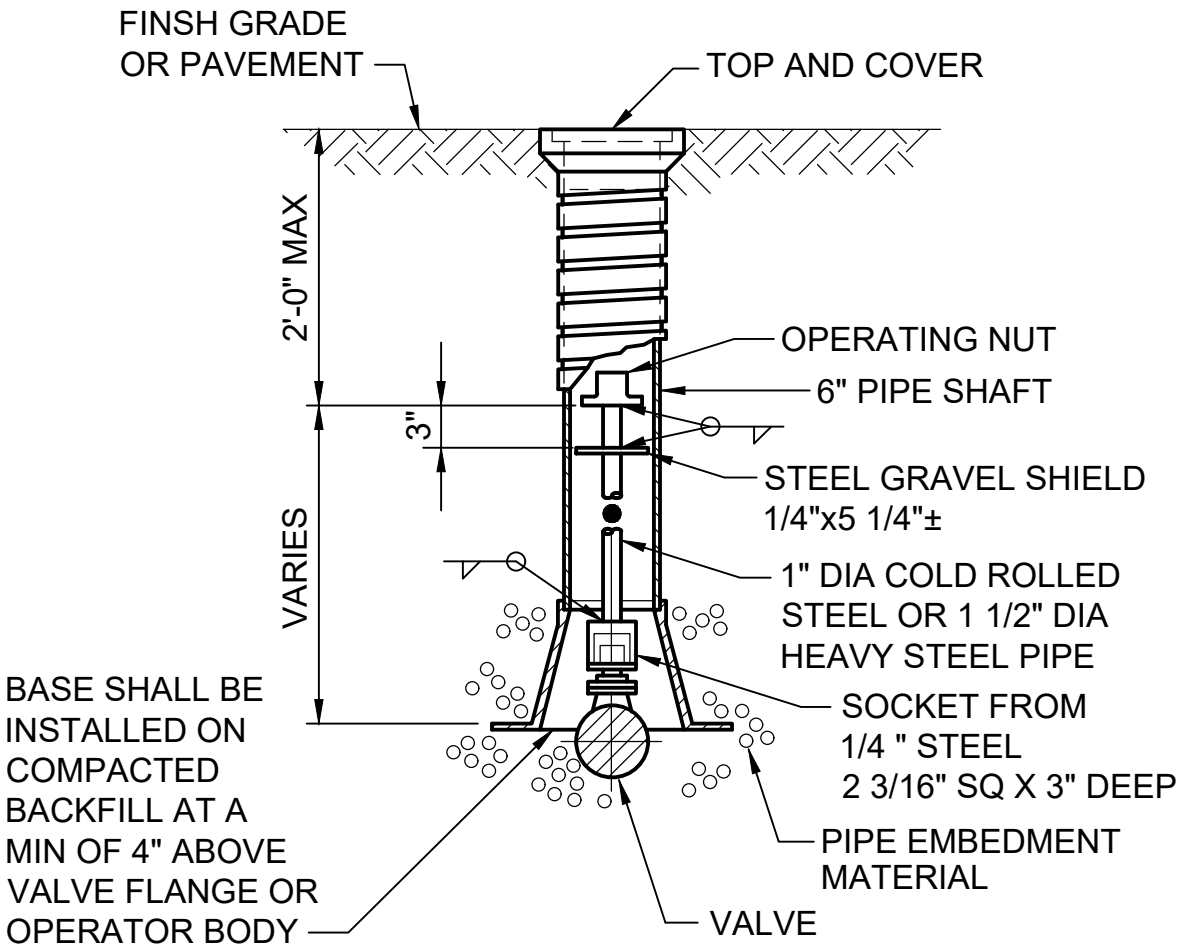

VALVE EXTENSION BOX DETAIL

NOT TO SCALE

NOTE:

1. TOP SHALL BE SCREW ON TYPE ONLY. SLIDE ON PROHIBITED.

VALVE EXTENSION BOX	**CITY OF REPUBLIC, MO STANDARD DETAIL #24**	
	SPEC SECTION 331216	APRIL 2022

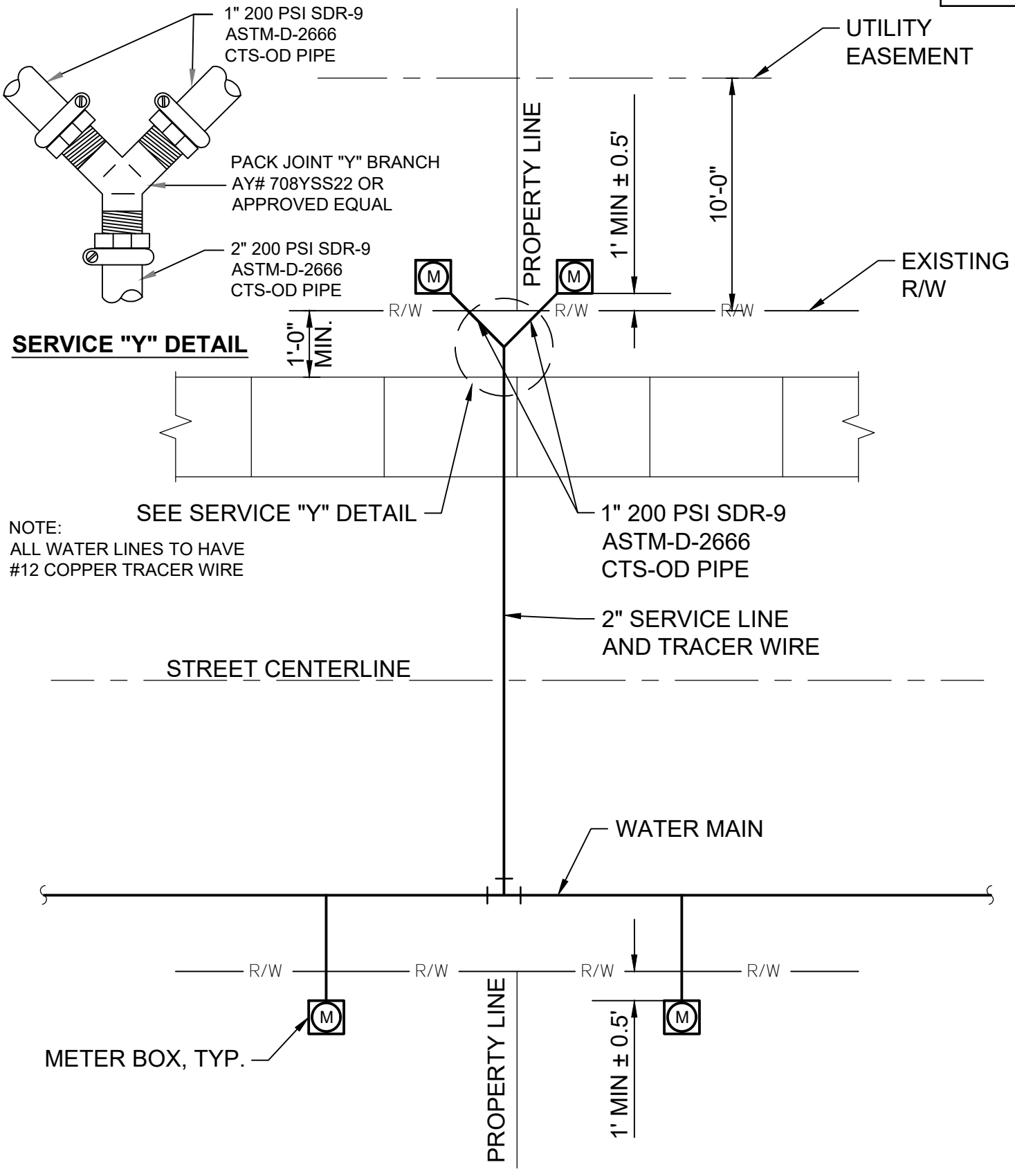

RESIDENTIAL METER LOCATIONS

NOT TO SCALE

WATER SERVICE DETAIL	**CITY OF REPUBLIC, MO** **STANDARD DETAIL #25**	
	SPEC SECTION 331100	AUGUST 2022

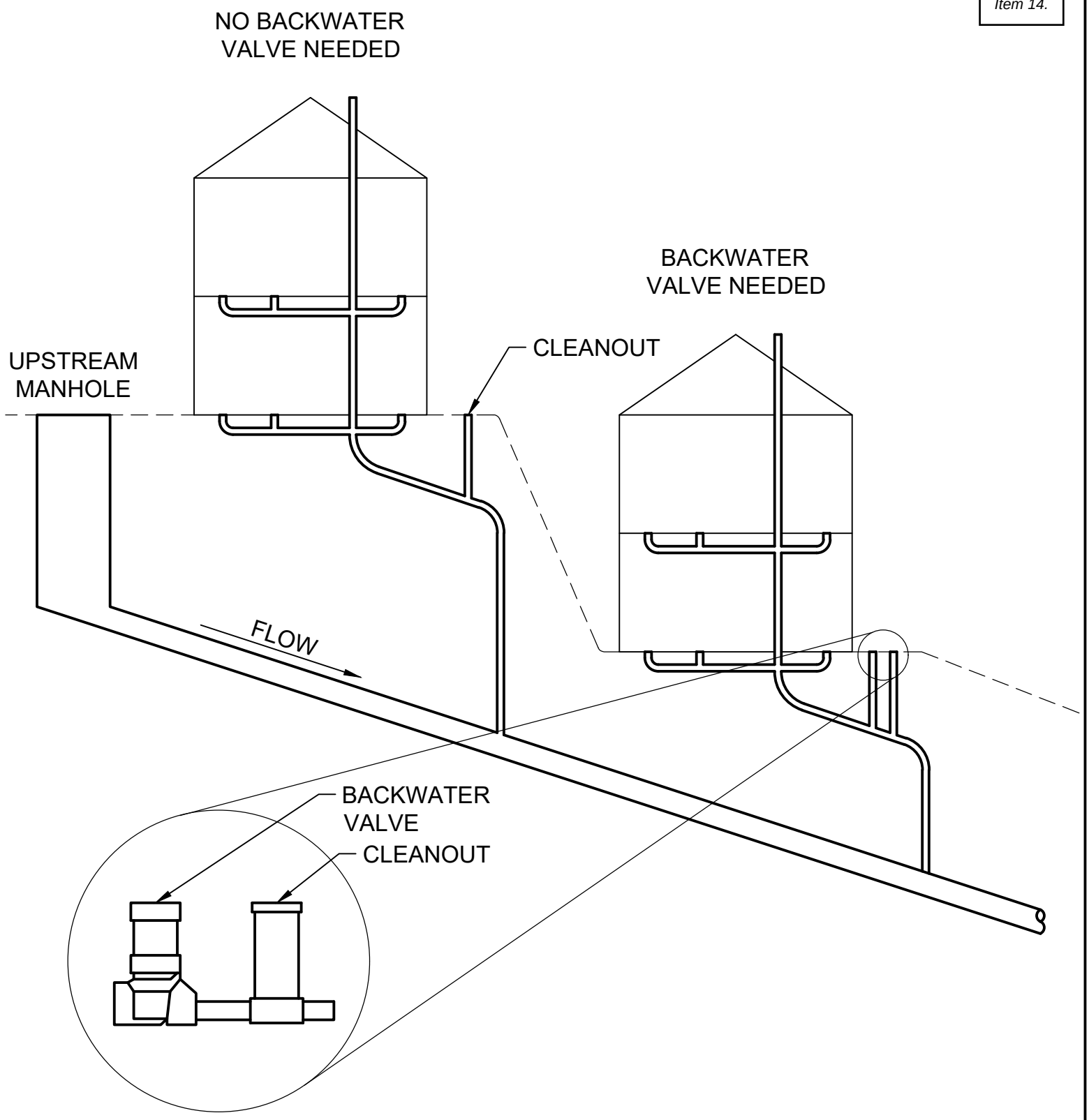

BACKWATER VALVE LOCATION
NOT TO SCALE

BACKWATER VALVE	**CITY OF REPUBLIC, MO** **STANDARD DETAIL #26**	
	SPEC SECTION 221313	APRIL 2022

REPUBLIC BUILDS
Public Works · Community Development

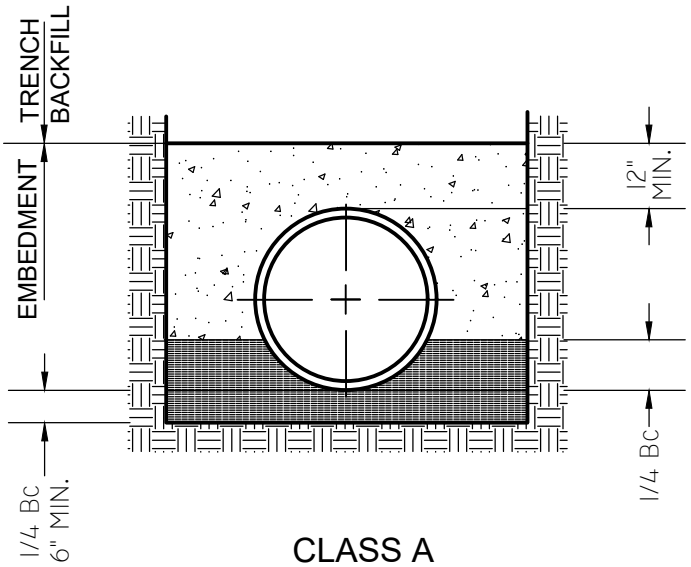

CLASS A
CONCRETE CRADLE

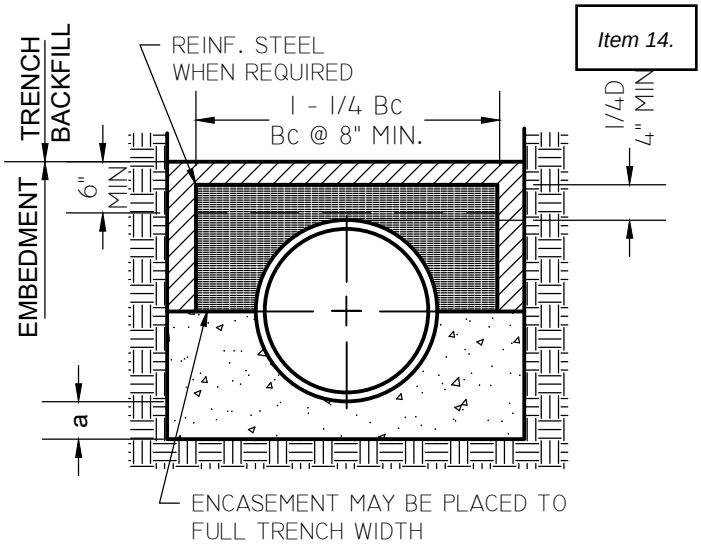

CLASS A
CONCRETE ARCH

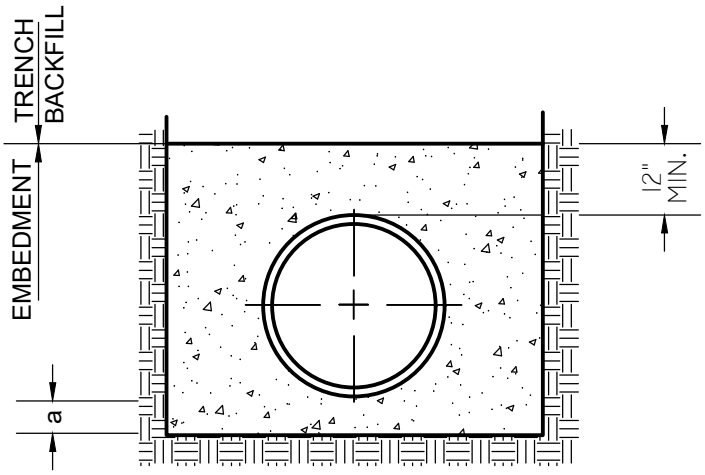

CLASS B
FIRST CLASS BEDDING

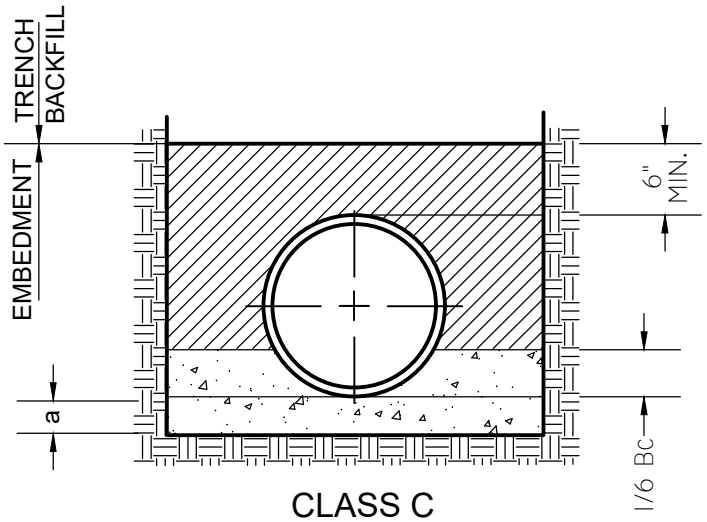

CLASS C
ORDINARY BEDDING

TABLE OF EMBEDMENT DEPTHS BELOW PIPE

SOIL TRENCH		
BEDDING CLASS	PIPE O.D.	a MIN.
A AND B	16" AND SMALLER	4"
A AND B	LARGER THAN 16"	1 / 4 O.D.
C	32" AND SMALLER	4"
C	LARGER THAN 32"	1 / 8 O.D.

ROCK TRENCH		
BEDDING CLASS	PIPE O.D.	a MIN.
A AND B	24" AND SMALLER	6"
A AND B	LARGER THAN 24"	1 / 4 O.D.
C	48" AND SMALLER	6"
C	LARGER THAN 48"	1 / 8 O.D.

LEGEND

Bc	OUTSIDE DIA. OF PIPE
D	NOMINAL PIPE SIZE
a	EMBEDMENT BELOW PIPE
	HAND PLACED EMBEDMENT
	GRANULAR EMBEDMENT
	CONCRETE
	UNDISTURBED EARTH

NOT TO SCALE

EMBEDMENT OF PIPE

CITY OF REPUBLIC, MO
STANDARD DETAIL #27

SPEC SECTION 312050

APRIL 2022

REPUBLIC BUILDS Public Works · Community

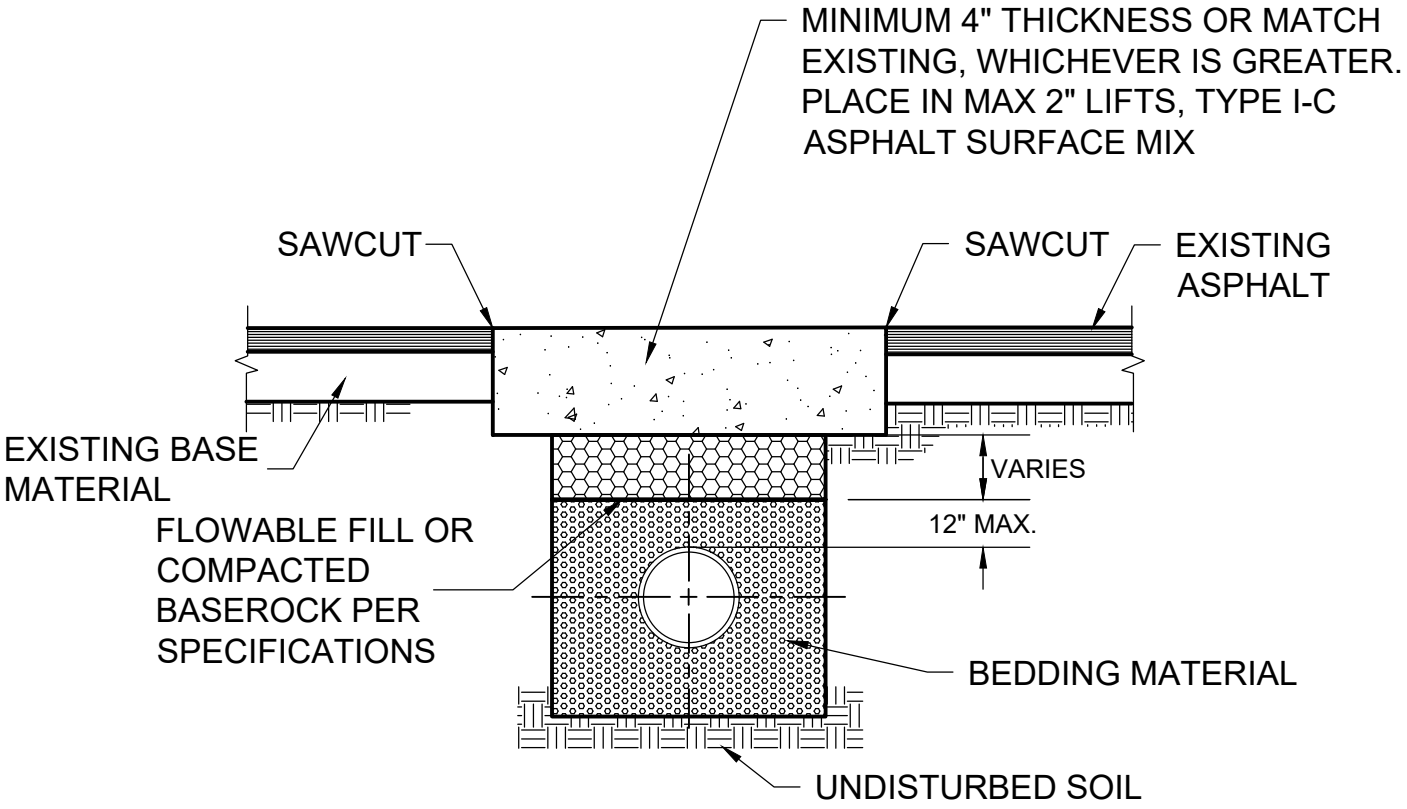

NOTES:

1. CITY OF REPUBLIC TO SPECIFY SPECIFIC FLOWABLE MIX DESIGN, POUR TO TOP OF EXISTING ROADWAY FOR TEMPORARY DRIVING SURFACE.
2. LIMESTONE BASE ROCK MUST HAVE OPTIMAL MOISTURE CONTENT AND BE COMPACTED EVERY LIFT. TEMPORARY 3" COLD MIX ASPHALT OR UPM PATCH REQUIRED.

NOT TO SCALE

ASPHALT STREET REPAIR	**CITY OF REPUBLIC, MO STANDARD DETAIL #28**	
	SPEC SECTION 347200	JUNE 2022

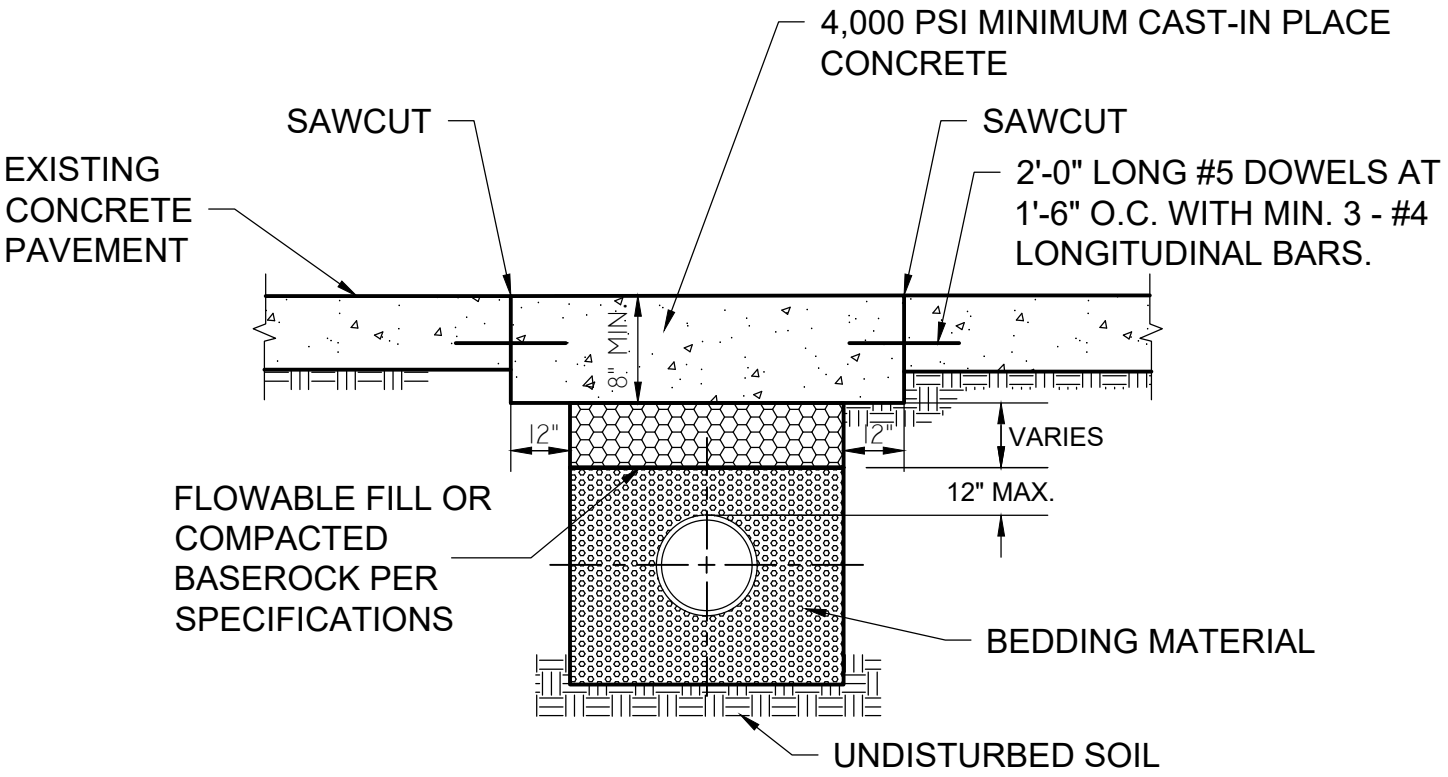

NOTES:

1. CITY OF REPUBLIC TO SPECIFY SPECIFIC FLOWABLE MIX DESIGN, POUR TO TOP OF EXISTING ROADWAY FOR TEMPORARY DRIVING SURFACE.
2. COMPACTED DIRTY BASE MUST HAVE OPTIMAL MOISTURE CONTENT AND BE COMPACTED EVERY LIFT. TEMPORARY 3" COLD MIX ASPHALT OR UPM PATCH REQUIRED.

NOT TO SCALE

CONCRETE STREET REPAIR	**CITY OF REPUBLIC, MO STANDARD DETAIL #29**	
	SPEC SECTION TBD	JUNE 2022

TYPICAL STREET SECTIONS

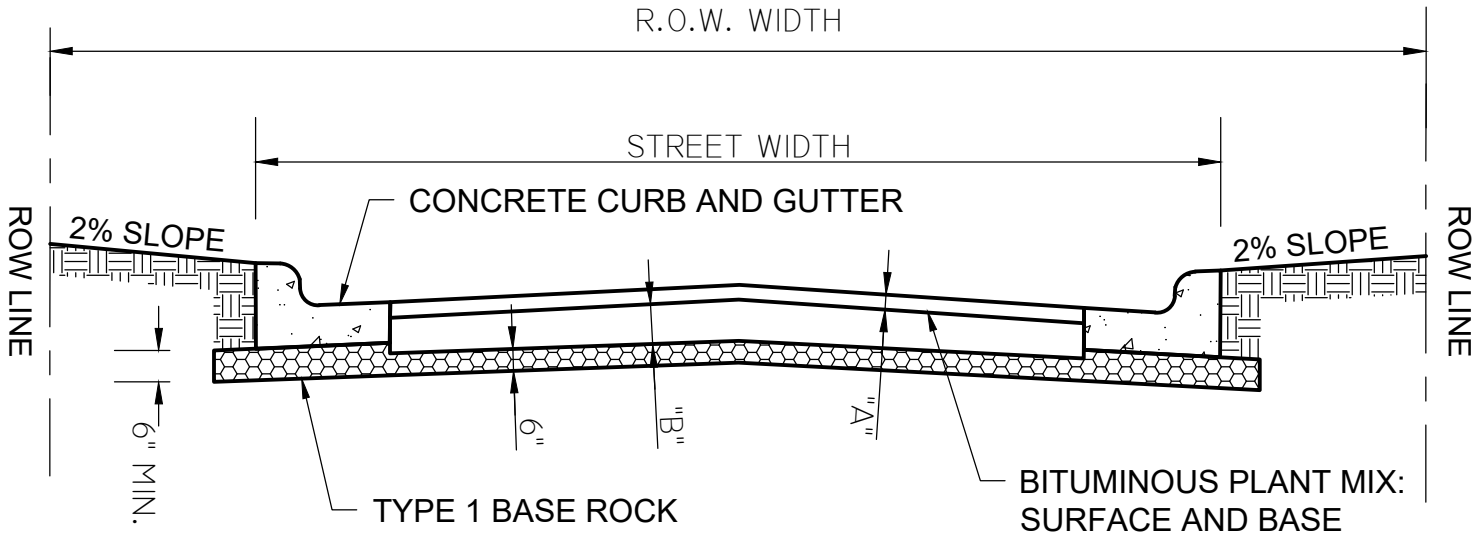

ASPHALTIC CONCRETE PAVEMENT

FUCTIONAL CLASSIFICATION	STREET SEGMENT						INTERSECTION			PARKING		SPEED (MPH) NO. OF LANES	SIGNALIZED INTERSECTION SPACING LANE WIDTH	5' SIDEWALK ROW WIDTH	6' CURVILINEAR SIDEWALK STREET WIDTH BOC/BOC
	NO. OF LANES	LANE WIDTH	ROW WIDTH	STREET WIDTH BOC/BOC	"A"	"B"	NO. OF LANES	ROW WIDTH	STREET WIDTH BOC/BOC						
PRIMARY ARTERIAL	2 LANE	12'	110'	28'	SEE NOTE 4	SEE NOTE 4	3	80' + TRIANGLES	40'	NO		2 LANE	12'	80'	28'
	3 LANE	12'	110'	40'	SEE NOTE 4	SEE NOTE 4	3-4	80' + TRIANGLES	3-40' 4-52'	NO		3 LANE	12'	80'	40'
SECONDARY ARTERIAL	2 LANE	12'	80'	28'	SEE NOTE 4	SEE NOTE 4	3	80' + TRIANGLES	40'	NO		2 LANE	12'	80'	28'
	3 LANE	12'	80'	40'	SEE NOTE 4	SEE NOTE 4	3-4	80' + TRIANGLES	3-40' 4-52'	NO		3 LANE	12'	80'	40'
COLLECTOR	2 LANE	12'	70'	28'	1 1/2"	7"	3	70' + TRIANGLES	3-40'	NO		2 LANE	12'	70'	28'
	3 lane	12'	70'	40'	1 1/2"	7"	3-4	70' + TRIANGLES	3-40' 4-52'	NO		3 LANE	12'	70'	40'
LOCAL - RESIDENTIAL	2 LANE	12'	50'	28'	1 1/2"	7"	2	50' + TRIANGLES	28'	BOTH		2 LANE	12'	50'	28'

NOTES:
1. CROSS SLOPE SHALL BE 2% ON ALL PAVEMENTS
2. WIDTH OF PAVEMENT IS SUBJECT TO THE REQUIREMENTS OF PLANNING AND ZONING DEPARTMENT AND MAY VARY FROM ABOVE
3. SIDEWALKS ARE 5' MINIMUM WIDTH
4. TO BE INDIVIDUALLY DESIGNED

CITY OF REPUBLIC, MO
STANDARD DETAIL #30

SPEC SECTION 312050

JUNE 2022

REPUBLIC BUILDS
Public Works • Community Development

NOT TO SCALE

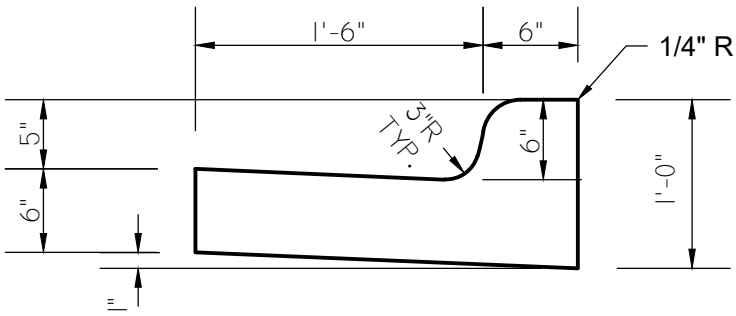

SECTION

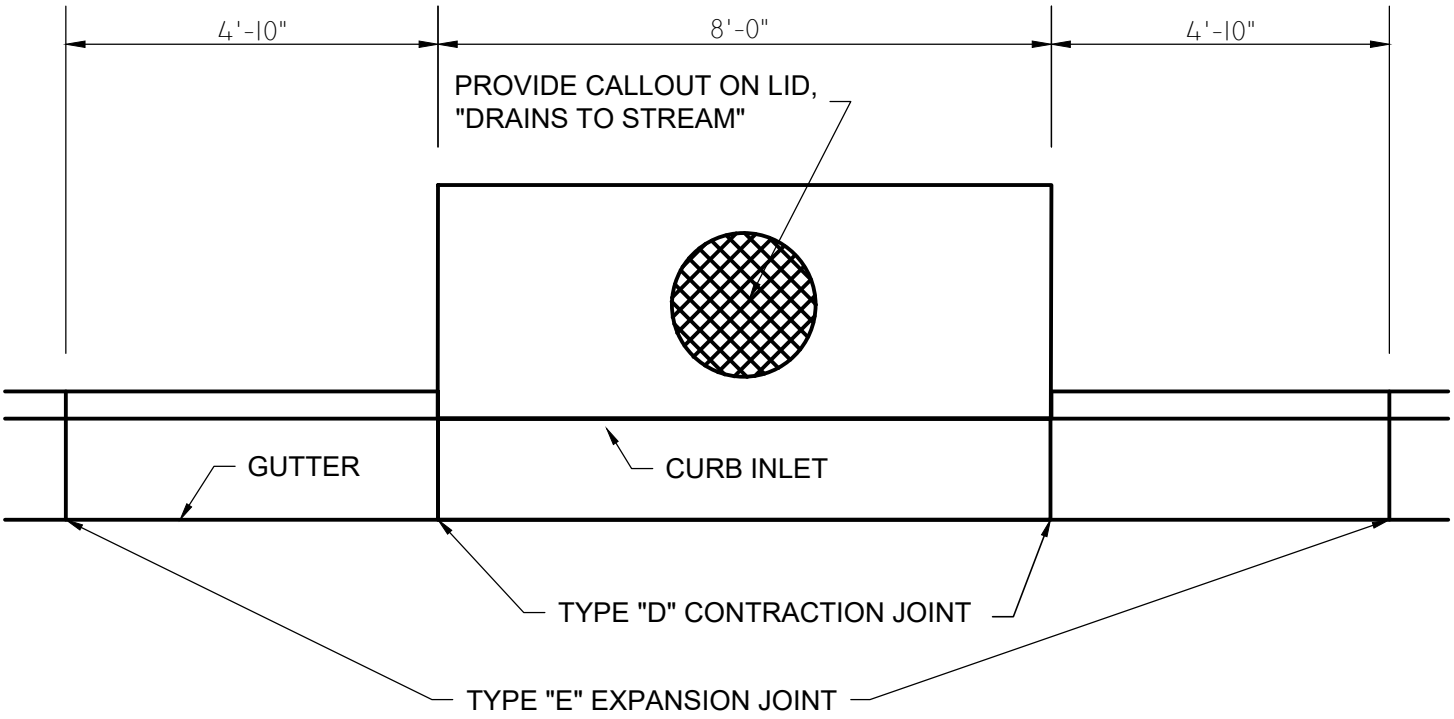

JOINT LOCATION PLAN AT CURB INLETS

NOT TO SCALE

CONCRETE CURB AND GUTTER	**CITY OF REPUBLIC, MO STANDARD DETAIL #32**	
	SPEC SECTION 347100	APRIL 2022

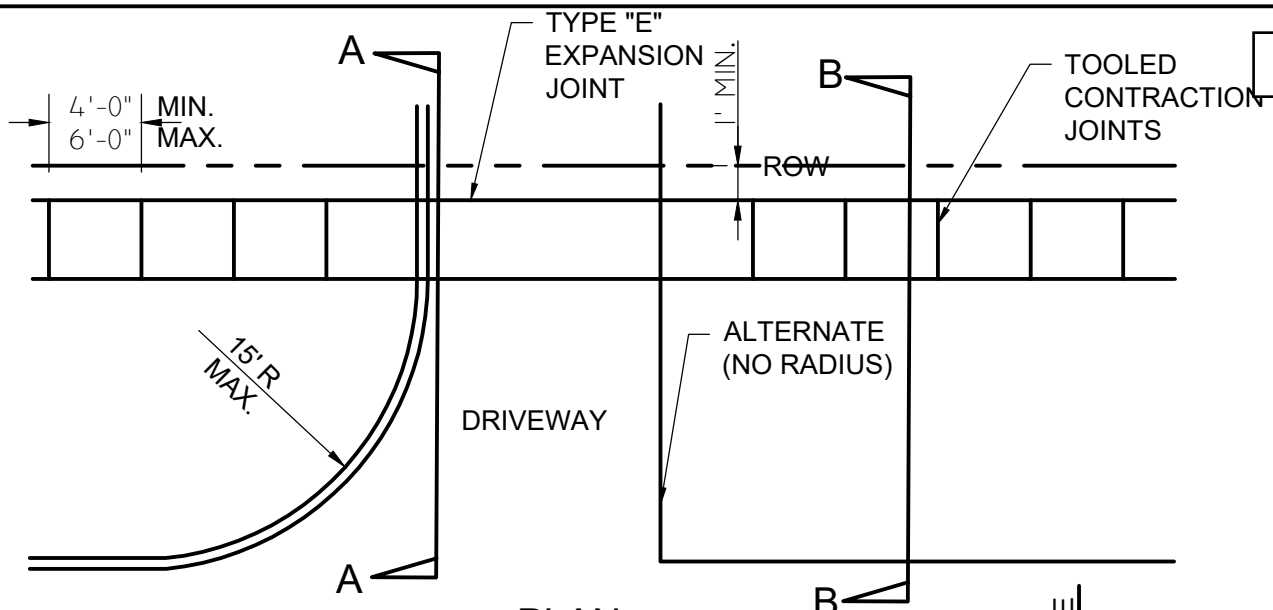

PLAN

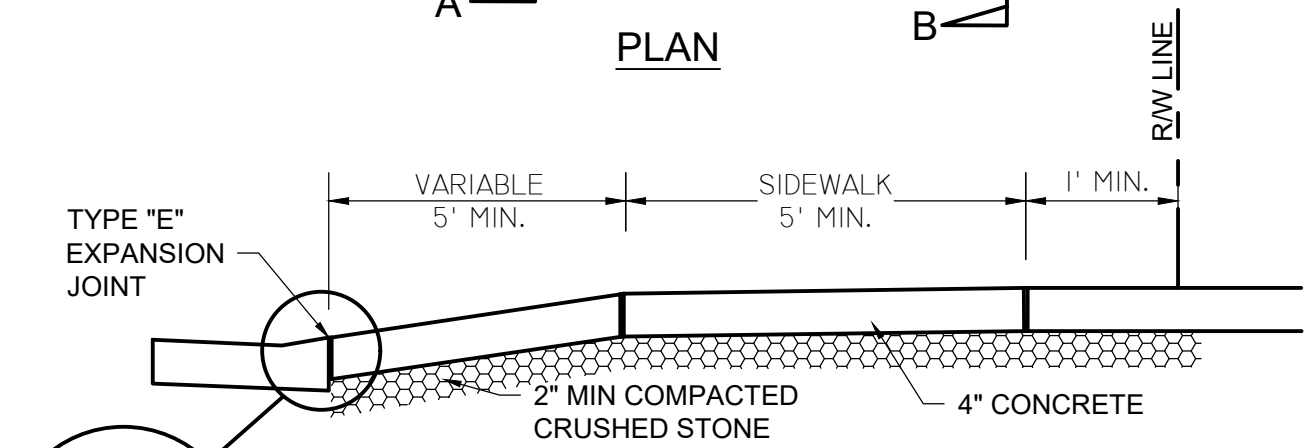

SECTION A-A

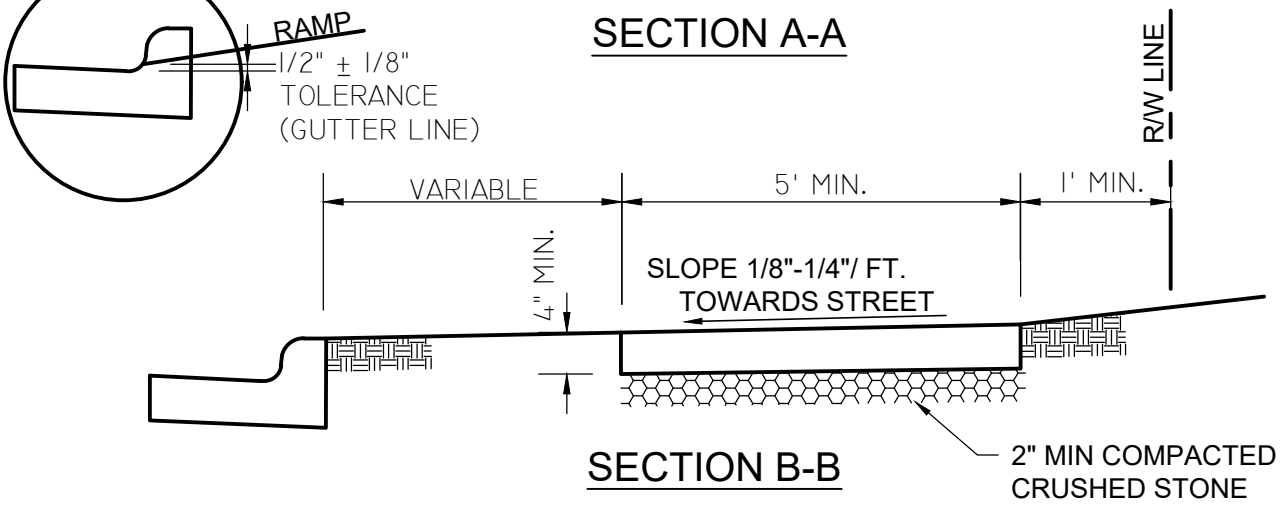

SECTION B-B

NOTE:

1. EXPASNSION JOINTS SHALL BE PLACED NOT MORE THAN 50 FT. APART ON STRAIGHT RUNS FOR HAND LAID SIDEWALK, AND NOT MORE THAN 100 FT. APART ON STRAIGHT RUNS FOR MACHINE LAID SIDEWALKS.
2. SIDEWALK CURBS AND RAMPS SHOULD BE ADA COMPLIANT. 1:12 (8.33%) MAXIMUM SLOPE AND 1:50 (2%) MAXIMUM CROSS-SLOPE. REFER TO CURB RAMP FIGURES FOR ADDITIONAL DETAILS.
3. FOR ADJACENT GRADING AROUND SIDEWALKS, CUT OR FILL SLOPES SHALL NOT EXCEED 4:1 AND SLOPE IN GRASSED AREAS SHALL NOT BE LESS THAN 1%.

NOT TO SCALE

CONCRETE SIDEWALK AND DRIVEWAY	**CITY OF REPUBLIC, MO STANDARD DETAIL #32**	
	SPEC SECTION 347100	JUNE 2022

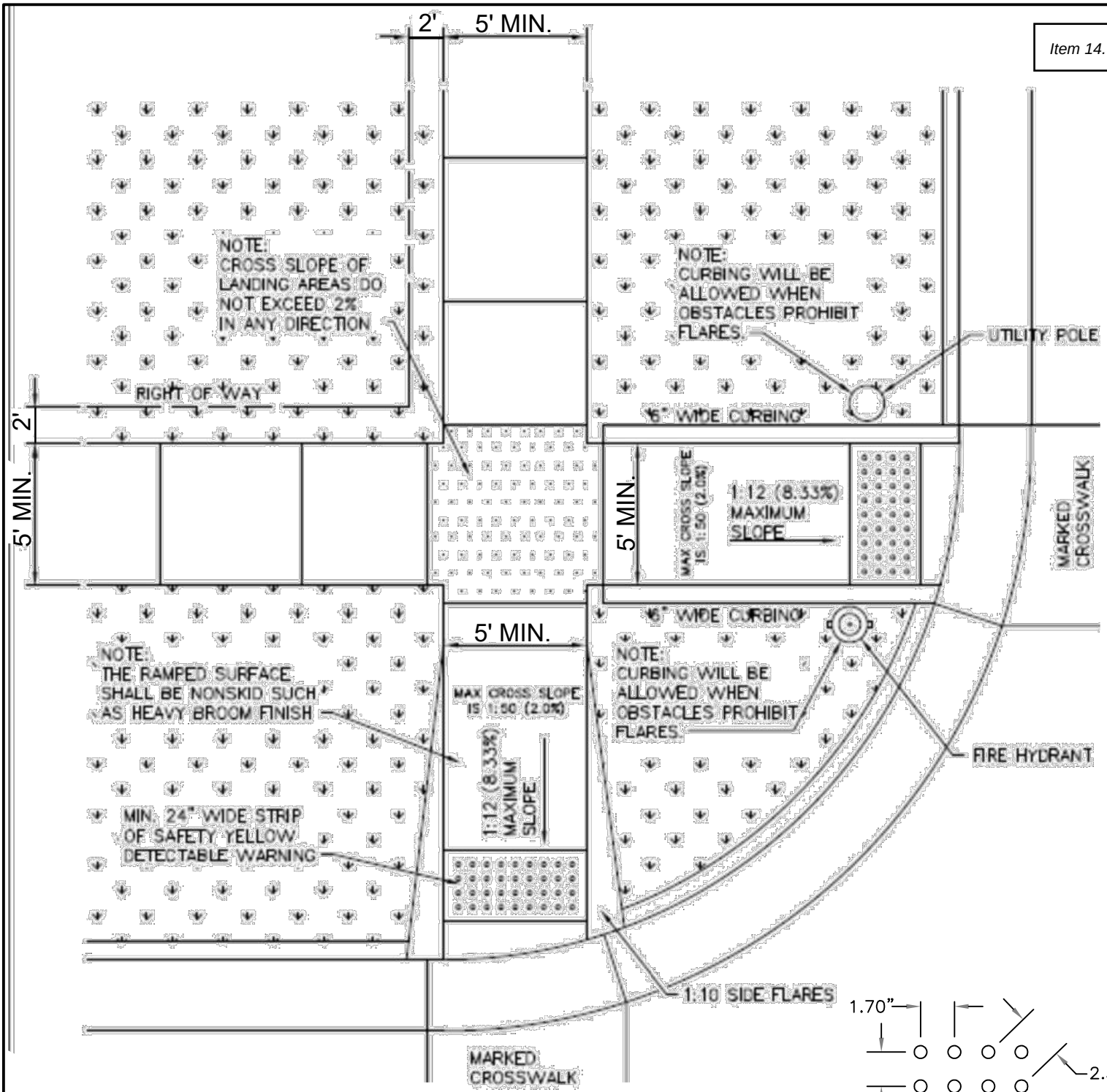

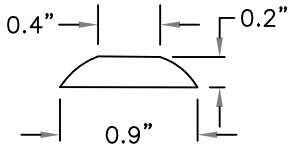

DOME SECTION

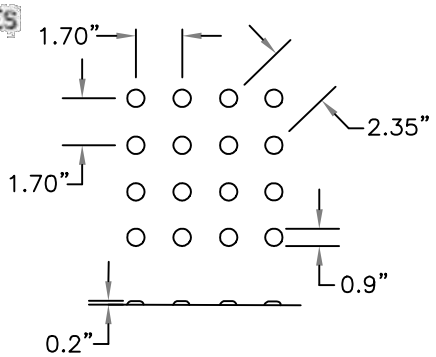

DOME SPACING

NOTE:
DOMES SHALL BE ALIGNED ON A SQUARE GRID IN THE PREDOMINANT DIRECTION OF TRAVEL TO PERMIT WHEELS TO ROLL BETWEEN DOMES.

NOT TO SCALE

CURB RAMP TYPE I

CITY OF REPUBLIC, MO
STANDARD DETAIL #33

SPEC SECTION 347100

JUNE 2022

REPUBLIC BUILDS Public Works · Community Development

NOTE:

1. USE CURB RAMP TYPE II WHEN DISTANCE FROM FACE OF CURB AND THE RIGHT OF WAY LINE IS LESS THAN AN ALLOWABLE DISTANCE TO INSTALL A CURB RAMP TYPE I WITH A 1:12 (8.33%) RUNNING SLOPE
2. REFER TO STANDARD DETAIL #34 FOR DETECTABLE WARNING STRIP DOME SECTION AND DETAILS.

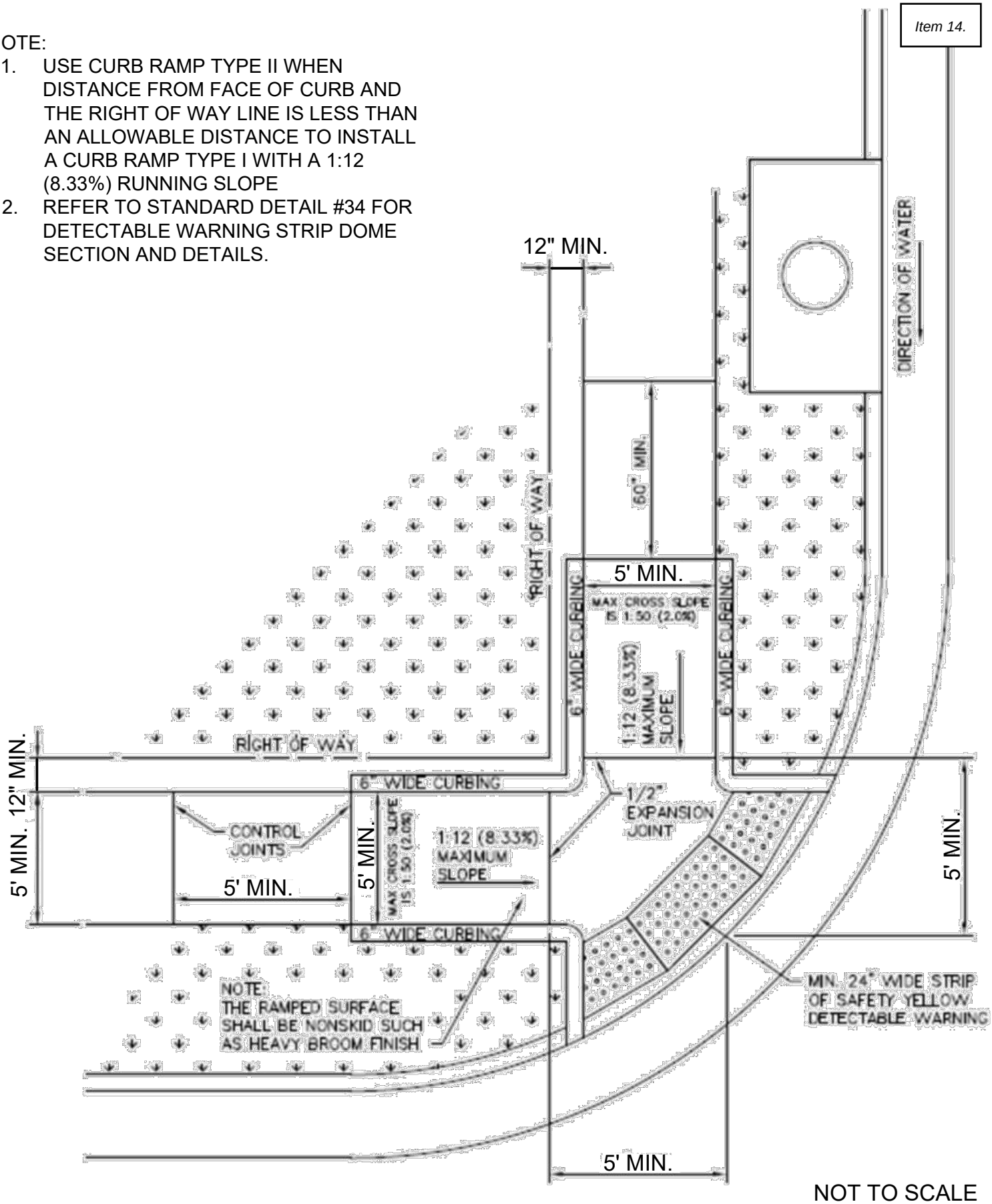

NOT TO SCALE

CURB RAMP TYPE II	**CITY OF REPUBLIC, MO** **STANDARD DETAIL #34**	
	SPEC SECTION 347100	JUNE 2022

REPUBLIC BUILDS
Public Works · Community Development

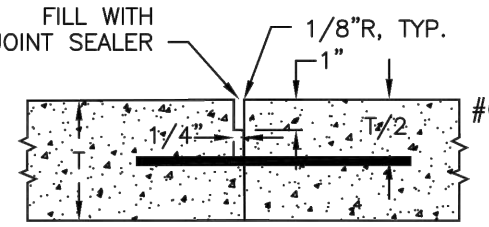

DOWELED LONGITUDINAL JOINT
WITH 24" NO. 6 DEFORMED BAR AT 24" O.C.

TYPE "A"

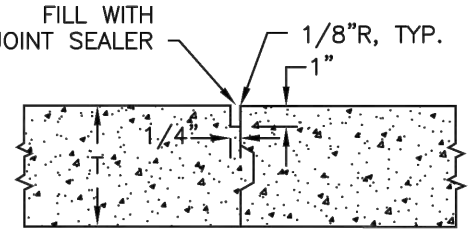

KEYED LONGITUDINAL JOINT

TYPE "B"

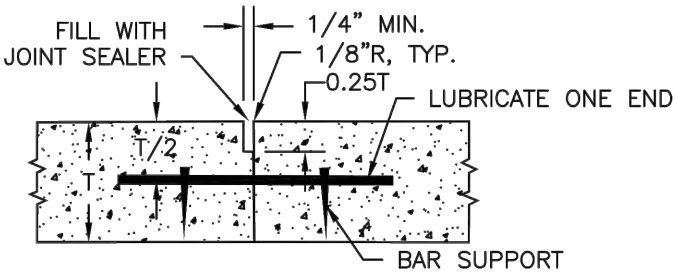

SAWED CONTRACTION JOINT WITH
1" X 18" DOWEL BAR AT 24" O.C.

TYPE "C"

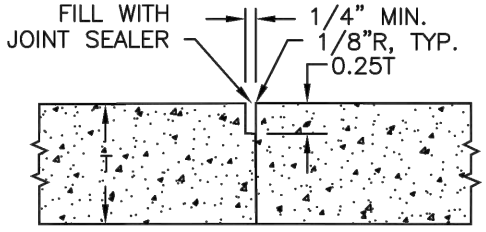

SAWED CONTRACTION JOINT

TYPE "D"

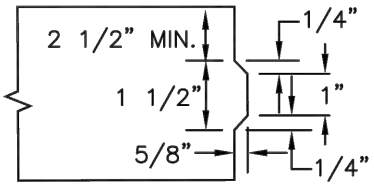

DETAIL KEY
KEYWAY FORMED BY FASTENING KEY TO FORM

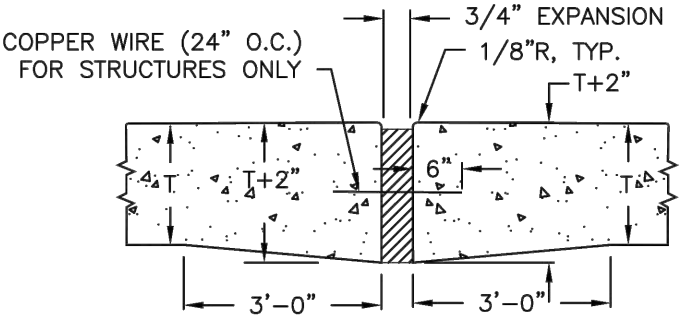

EXPANSION JOINT

TYPE "E"

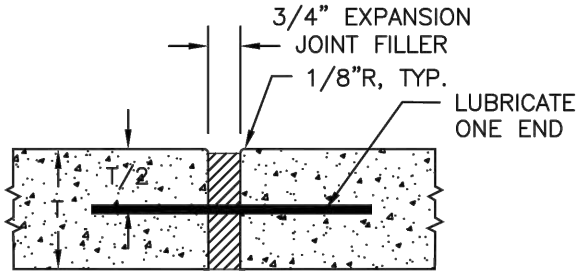

DOWELED EXPANSION JOINT
3/4" X 15" DOWEL BAR AT 24" O.C.

TYPE "F"

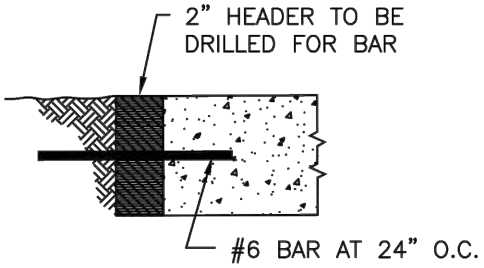

CONSTRUCTION HEADER CONCRETE

DEPTH OF SAW JOINT

6" PAV. = 1-1/2"
7" PAV. = 1-3/4"
8" PAV. = 2"

NOT TO SCALE

CONCRETE JOINT DETAILS

CITY OF REPUBLIC, MO
STANDARD DETAIL #36

SPEC SECTION
347000

APRIL
2022

REPUBLIC BUILDS
Public Works · Community

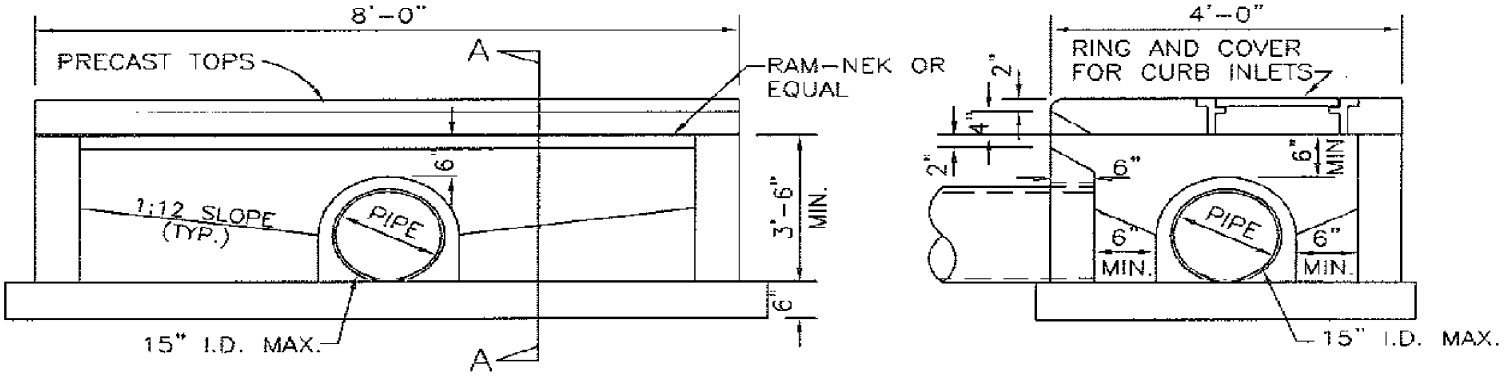

NOTE:
#4@10" O.C. ALL WALLS (VERT.,HORZ., AND SLAB)
SEE TOP SLAB REINFORCMENT DETAIL.

FOR 6" PRECAST TOP

SECTION A–A

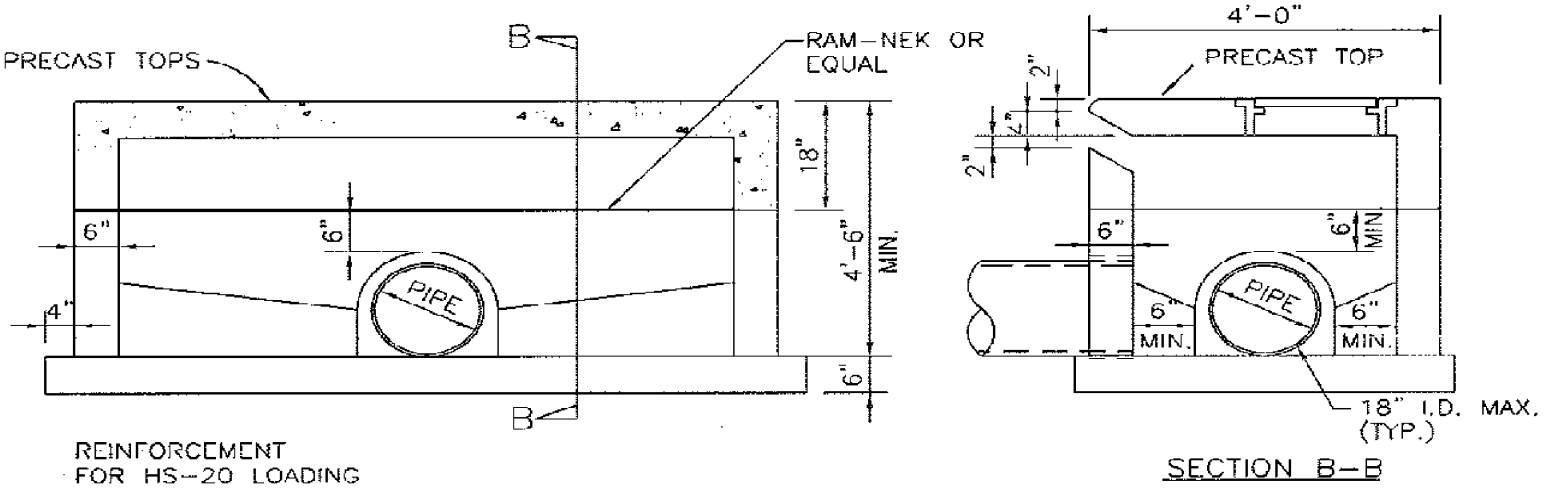

FOR 18" PRECAST TOP

SECTION B–B

NOTE:

1. BOTTOM TO BE CAST IN PLACE
2. PIPE TO BE ON GRADE BEFORE BOTTOM IS CONSTRUCTED
3. FOR 6" TOP USE 4-#4 DOWELS: ONE IN EACH CORNER W/ RAM-NEK OR EQUAL
4. RAM-NEK ALL JOINTS (OR EQUAL)
5. 6" INVERT REQUIRED TO PREVENT SEDIMENTATION
6. THERE MUST BE A 6" MIN. CONCRETE SEGMENT ABOVE PRECAST OPENING
7. INLETS MUST PROVIDE INDENTED TEXT SPECIFYING "DRAINS TO STREAM"

NOT TO SCALE

CURB INLETS 18" OR LESS	**CITY OF REPUBLIC, MO STANDARD DETAIL #37**	
	SPEC SECTION 347100	APRIL 2022

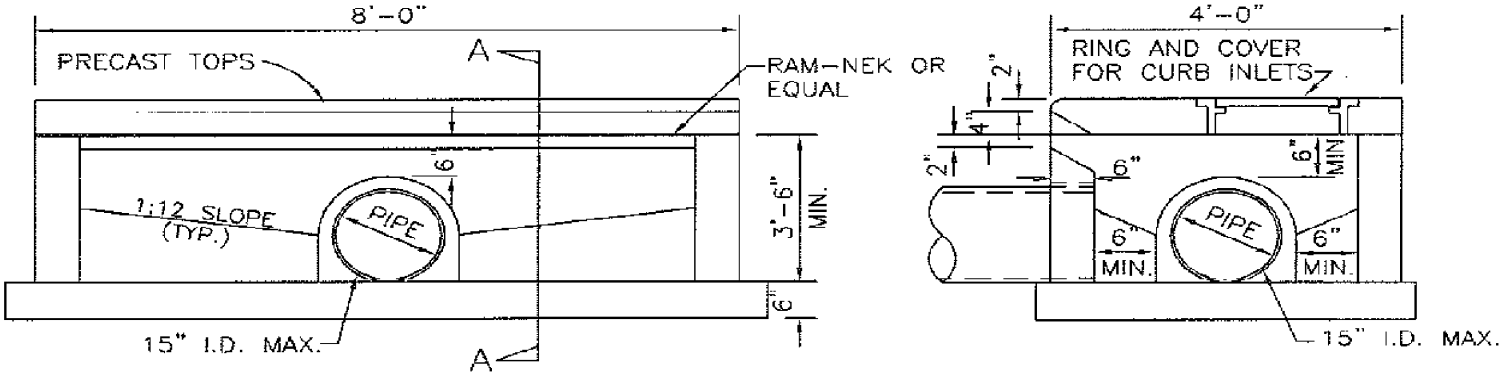

NOTE:
#4@10" O.C. ALL WALLS (VERT.,HORZ., AND SLAB)
SEE TOP SLAB REINFORCMENT DETAIL.

FOR 6" PRECAST TOP

SECTION A–A

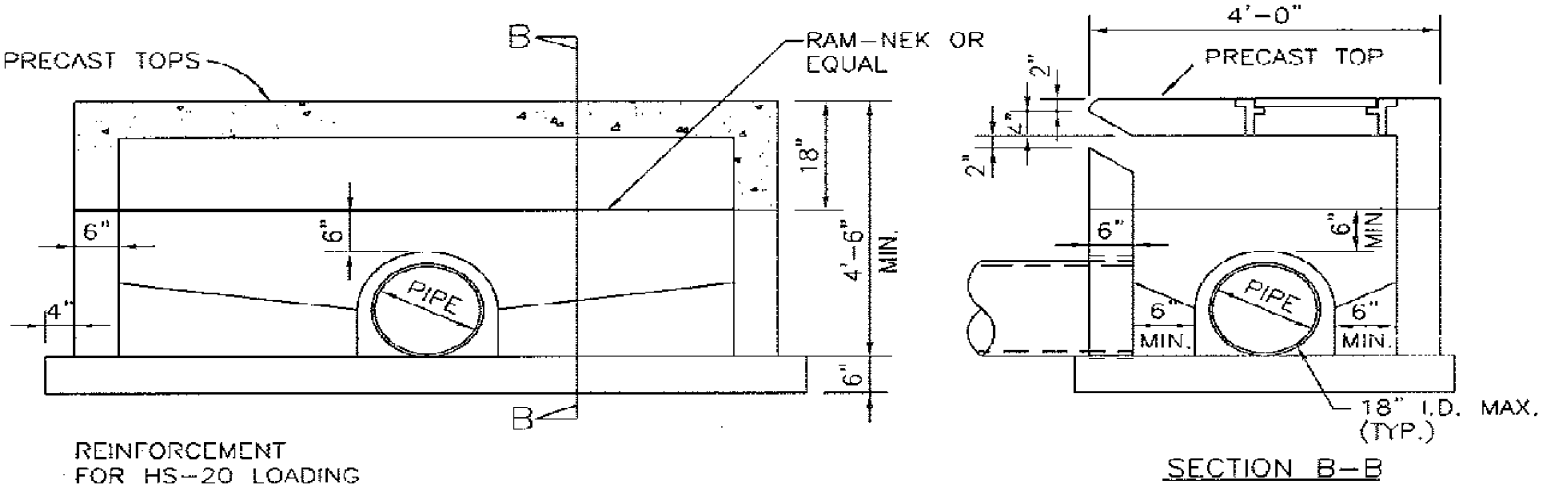

REINFORCEMENT FOR HS-20 LOADING

SECTION B–B

FOR 18" PRECAST TOP

NOTE:

1. BOTTOM TO BE CAST IN PLACE
2. PIPE TO BE ON GRADE BEFORE BOTTOM IS CONSTRUCTED
3. FOR 6" TOP USE 4-#4 DOWELS: ONE IN EACH CORNER W/ RAM-NEK OR EQUAL
4. RAM-NEK ALL JOINTS (OR EQUAL)
5. 6" INVERT REQUIRED TO PREVENT SEDIMENTATION
6. THERE MUST BE A 6" MIN. CONCRETE SEGMENT ABOVE PRECAST OPENING
7. INLETS MUST PROVIDE INDENTED TEXT SPECIFYING "DRAINS TO STREAM"
8. MAX ALLOWABLE OPENING HEIGHT SHALL NOT EXCEED SIX (6) INCHES.

NOT TO SCALE

CURB INLETS 18" OR LESS	**CITY OF REPUBLIC, MO STANDARD DETAIL #37**	
	SPEC SECTION 347100	APRIL 2022

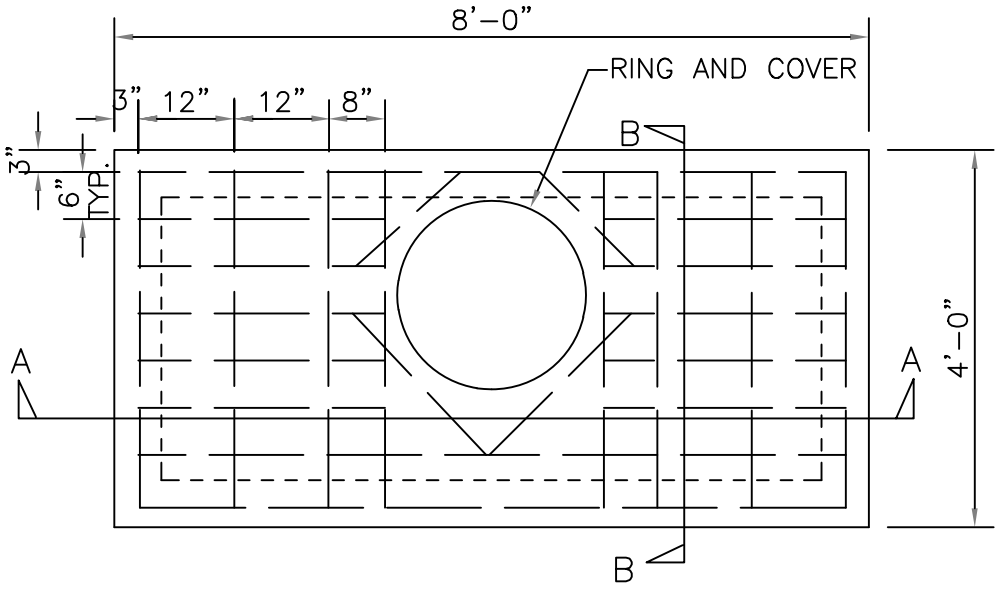

PLAN

NOTES;
1. USE NO. 4 BARS THROUGHOUT.
2. ALL PRECAST TOPS TO BE PINNED AT 4 CORNERS.
3. IF INLET IS NOT RECESSED, A PROTECTIVE 2" X 2" X 1/4" GALVANIZED ANGLE IRON IS REQUIRED AS SHOWN



SECTION A–A, 18" TOP

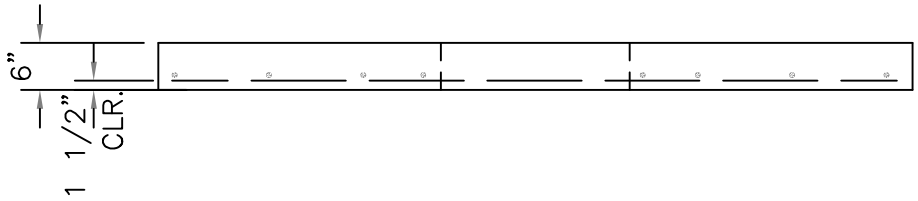

SECTION A–A, 6" TOP

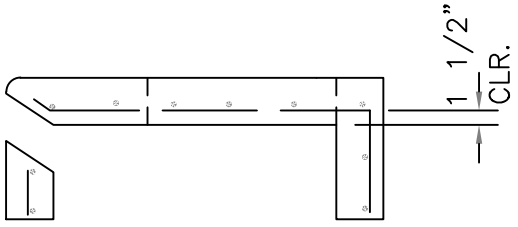

SECTION B–B

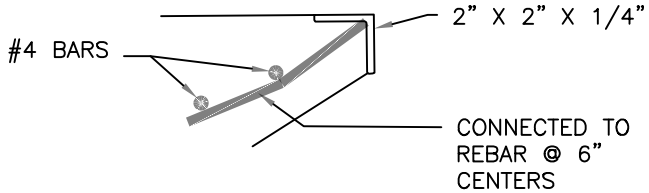

ANGLE IRON DETAIL

NOT TO SCALE

TOP SLAB REINFORCEMENT	**CITY OF REPUBLIC, MO STANDARD DETAIL #38**	
	SPEC SECTION 347100	JUNE 2022

NOTES:
1. NEENAH R-1715 OR APPROVED EQUAL.
2. PROVIDE CONCEALED PICKHOLE.
3. ALL DIMENSIONS ARE IN INCHES, UNLESS NOTED OTHERWISE.

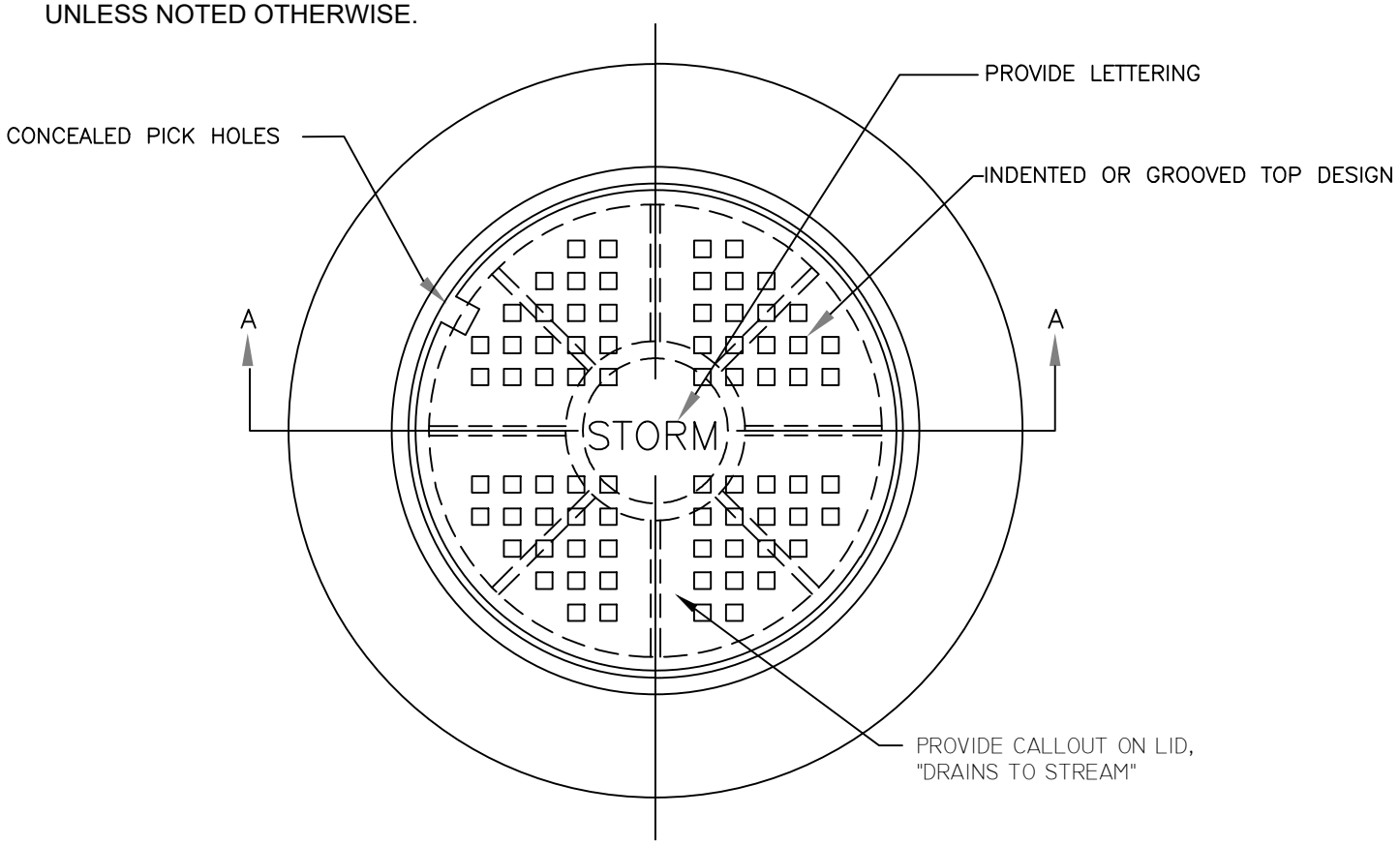

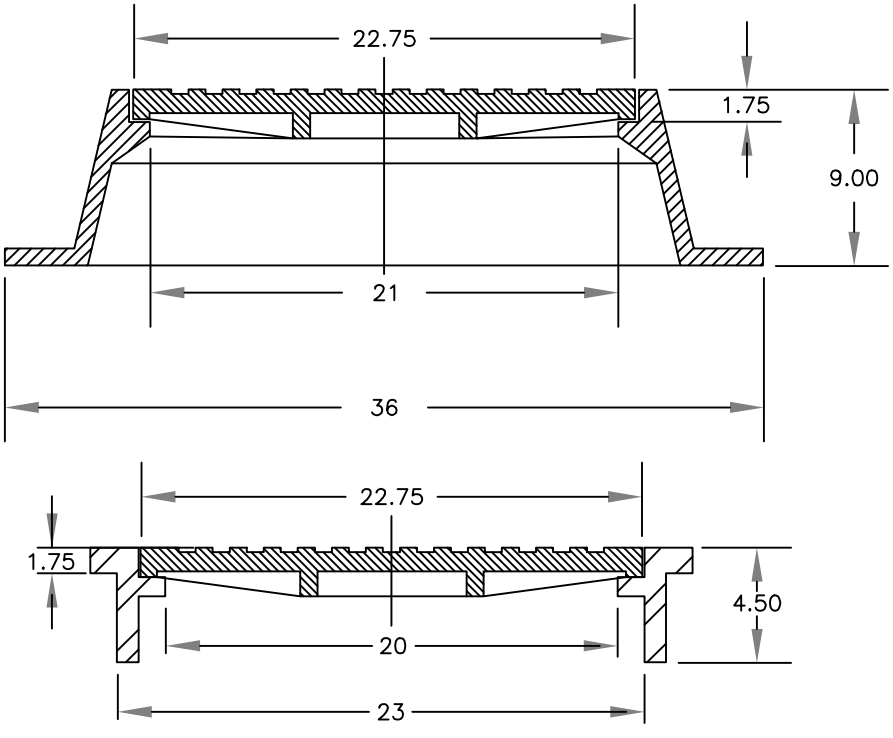

SECTION A–A

NOT TO SCALE

RING AND COVER FOR INLET

CITY OF REPUBLIC, MO
STANDARD DETAIL #39

SPEC SECTION 347100

JUNE 2022

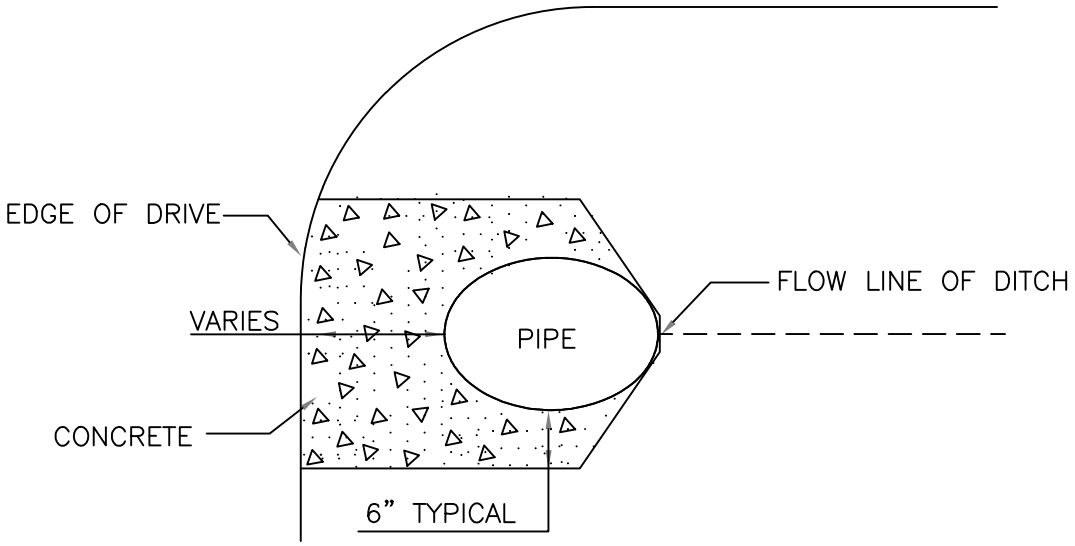

PLAN

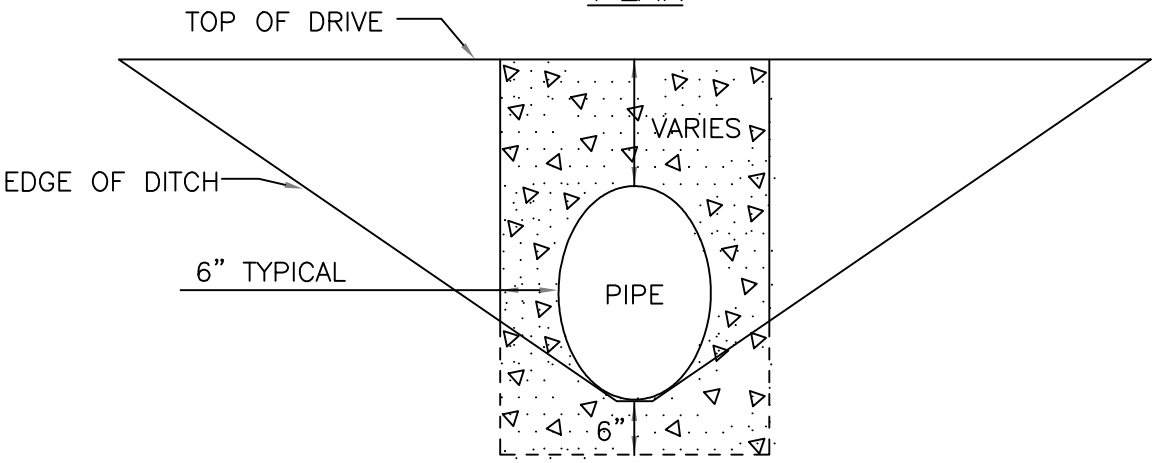

ELEVATION

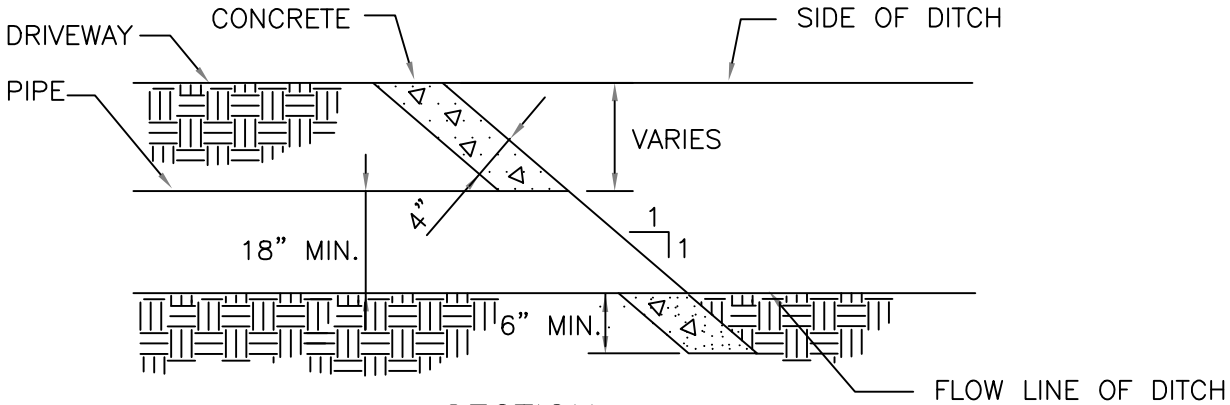

SECTION

FOR DRIVEWAY CROSSINGS AT UNIMPROVED STREETS WITH CORRUGATED OR CONCRETE PIPE. CUT PIPE AT A BEVEL AND POUR CONCRETE AROUND END TO MEASUREMENTS INDICATED.

NOT TO SCALE

CONCRETE CULVERT CAP-DRIVEWAYS	**CITY OF REPUBLIC, MO STANDARD DETAIL #41**	
	SPEC SECTION 347100	APRIL 2022

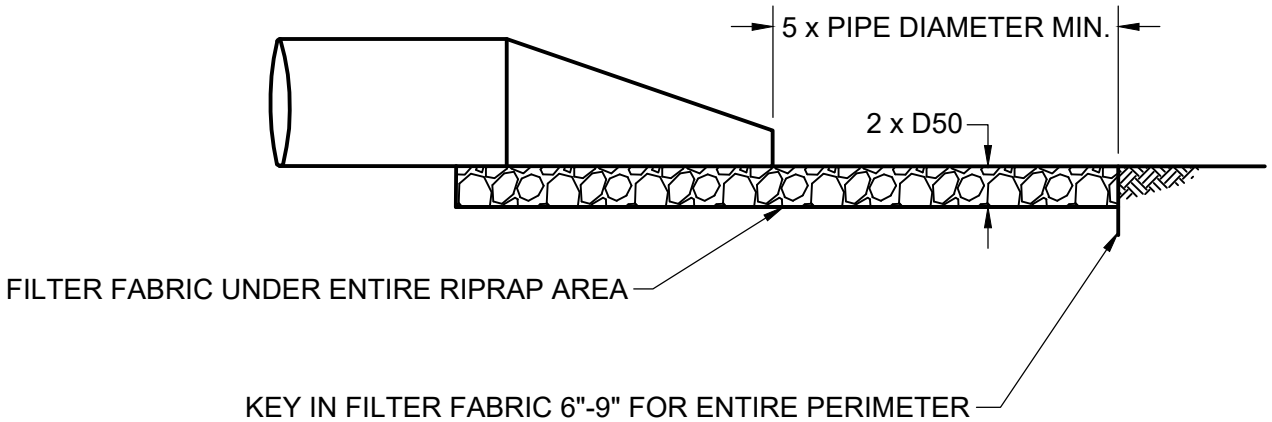

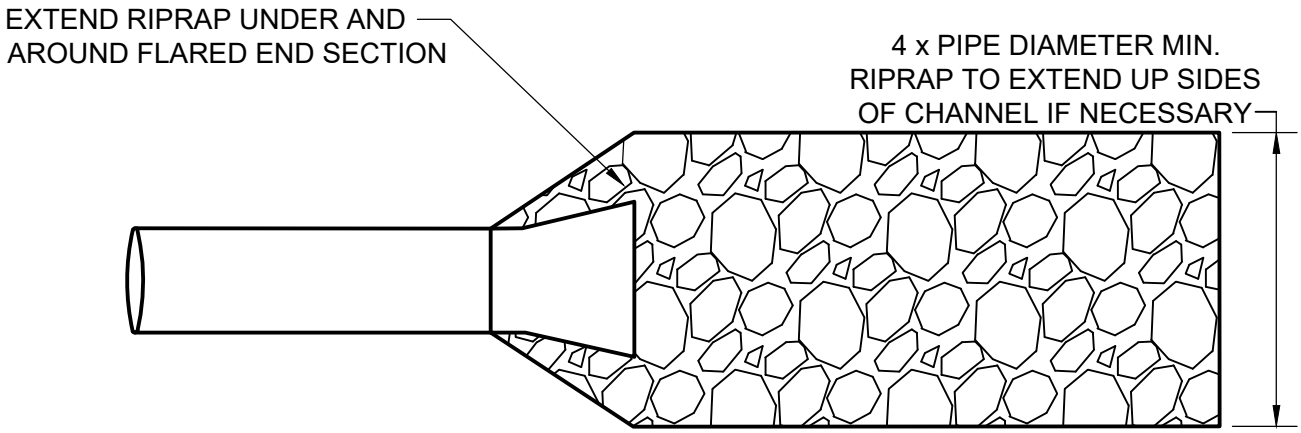

VELOCITY (FPS)	RIPRAP D50 MIN. DIAMETER (INCHES)
V<8	12
8<V<12	24
V>12	NOT PERMITTED

D50 OF LESS THAN 12 INCHES IS NOT PERMITTED.

NOTES:

1. FOR PIPES WITH HEADWALLS, BEGIN RIPRAP AT TOE OF HEADWALL. RIPRAP MINIMUM WIDTH TO BE THE WIDTH OF HEADWALL PLUS ONE FOOT ON BOTH SIDES.
2. FOR MULTIPLE PIPES AND ARCHED PIPES, RIPRAP TO BE A MINIMUM OF THE TOTAL WIDTH OF THE OPENING PLUS ONE FOOT ON BOTH SIDES.
3. D50 IS THE ROCK SIZE THAT CORRESPONDS TO 50 PERCENT OF THE ROCKS BEING SMALLER AND 50 PERCENT OF THE ROCKS BEING LARGER.

NOT TO SCALE

RIPRAP	**CITY OF REPUBLIC, MO STANDARD DETAIL #42**	
	SPEC SECTION 312050	JUNE 2022

A. Update to Construction Specifications Format Type

1. Specification format type was revised from the MasterFormat 1995 Type to MasterFormat 2004.
    a. The expansion allowed CSI MasterFormat to adequately cover construction industry subject matter while providing additional space for more subjects at each classification level, plus adding infrastructure and process equipment. The older MasterFormat 1995 edition, using 16 Divisions, ran out of space to adequately address topics, and the lack of space often resulted in the inconsistent classification of information.
    b. The new specification format type is industry standard and was covered in this update/revision.

B. Revisions to Construction Specification Sections:

Note: Items in red are previous 2014 Construction Specification Sections. Items in blue indicates update/revised specification sections.

1. Section 010000 – Definitions, Submittals and Procedures: Covers previous specifications
    a. Section -01090 – Definitions and Standards
    b. Section 01200 – Project Meetings and certification
    c. Section 01300 – Submittals
    d. Section 01530 – Temporary Barriers and Controls
2. Section 012000 – Right of Way Technical Specifications: Covers previous specifications
    a. Section 12000 – Right of Way Technical Specifications
3. Section 221313 – Sanitary Sewers: Covers previous specifications.
    a. Section 02610 – Sanitary Sewer Pipe
4. Section 312050 – Site Preparation and Earthwork: Covers previous specifications
    a. Section 02200 – Site Preparation and Earthwork
    b. Section 02222 – Trenching and Backfilling for Utilities
5. Section 329200 – Seeding and Sodding: Covers previous specifications
    a. Section 02930 – Seeding and Sodding
6. Section 331100 – Pressure Pipe: Covers previous specifications
    a. Section 02615 – Pressure Pipe
7. Section 331216 – Utility Valves and Accessories: Covers previous specifications
    a. Section 02640 – Valves, Hydrants and Accessories
8. Section 331223 – Submersible Lift Station: Covers previous specifications for wetwells
    a. Section 02605 – Manholes and Wetwells
9. Section 333213 – Sewage Lift Station – Wet Well Mounted: Covers previous specifications
    a. Section 11152 – Wetwell Mounted Wastewater Pumping Station
10. Section 333150 – Pipe Installation: Covers previous specifications.
    a. Section 02620 – Pipe Installation and Testing
    b. Section 02675 – Disinfection of Piping
11. Section 333900 – Utility Structures: Covers previous specifications
    a. Section 02605 – Manholes and Wetwells
12. Section 347000 – Concrete: Covers previous specifications:
    a. Section 03200 – Concrete Reinforcement
    b. Section 03300 – Concrete

13. Section 347100 – Concrete Curbs, Gutters, Sidewalks, Medians and Paved Drainage: Covers previous specifications.
    a. Section 02525 – Curbs, Gutters, Sidewalks, Median, and Paved Drainage
14. Section 347200 – Asphalt Concrete Pavement: Covers previous specifications
    a. Section 02512 – Asphaltic Concrete Pavement

AGENDA ITEM ANALYSIS

Project/Issue Name:	23-42 An Ordinance of the City Council Approving and Adopting a Stormwater Management and Design Criteria Manual.
Submitted By:	Angel Falig
Date:	September 13, 2023

Issue Statement

Consideration to approve the adoption of the newly proposed Stormwater Management and Design Criteria Manual.

Discussion and/or Analysis

The City of Republic is requesting Amendments to Article 410-VII Stormwater Management for Public and Private Improvements and the adoption of the newly proposed Stormwater Management and Design Criteria Manual.

The goal of this amendment is to adopt a reference document to aid in Stormwater Management and Design Criteria for developments proposed within City Limits. This document will provide the necessary updates to our Ordinance such that we maintain compliance with State and Federal Regulations.

The proposed adoption of this manual will go hand in hand with the amendments proposed for Chapter 410 Subdivision Regulations.

Recommended Action

Staff recommends the approval of the referenced Amendment.

AN ORDINANCE OF THE CITY COUNCIL APPROVING AND ADOPTING A STORMWATER MANAGEMENT AND DESIGN CRITERIA MANUAL

WHEREAS, the City of Republic, Missouri, ("City" or "Republic") is a municipal corporation and Charter City located in Greene County, Missouri, being duly created, organized, and existing under the laws of the State of Missouri; and

WHEREAS, City staff, under the supervision of the BUILDS Director, have prepared a comprehensive Stormwater Management and Design Criteria Manual ("Stormwater Manual"), which sets forth criteria for meeting the minimum standards governing the design of storm drainage facilities on public right-of-way and private property within the City of Republic; and

WHEREAS, the City Council desires to approve and adopt the Stormwater Manual; and

WHEREAS, Section 410 of the Municipal Code of the City of Republic, Missouri ("City Code"), which references and/or incorporates the standards for stormwater management of both public and private improvements within the City of Republic, will be amended by separate Ordinance, in accord with the laws, rules and regulations governing adoption of amendments to the City Code, to reference the Stormwater Manual approved and adopted herein.

NOW, THEREFORE, BE IT ORDAINED BY THE CITY COUNCIL OF THE CITY OF REPUBLIC, MISSOURI, AS FOLLOWS:

Section 1: The manual entitled "Stormwater Management and Design Criteria Manual", attached hereto and labeled "Attachment 1," is expressly incorporated herein by reference and is hereby adopted.

Section 2: All ordinances and parts of ordinances in conflict herewith are hereby repealed.

Section 3: The City Administrator or his/her designee, on behalf of the City, is authorized to take the necessary steps to execute this Ordinance.

Section 4: The WHEREAS clauses above are specifically incorporated herein by reference.

Section 5: The provisions of this Ordinance are severable, and if any provisions hereof are declared invalid, unconstitutional, or unenforceable, such determination shall not affect the validity of the remainder of this Ordinance.

Section 6: This Ordinance shall take effect and be in force from and after its passage as provided by law.

PASSED AND APPROVED at a regular meeting of the City Council of the City of Republic, Missouri, this _____ day of _____, 2023.

_____

Attest: Matt Russell, Mayor

_____
Laura Burbridge, City Clerk

Approved as to Form:



Megan McCullough, City Attorney

Final Passage and Vote:

REPUBLIC BUILDS
Public Works • Community Development

Standards

Stormwater Management and Design Criteria Manual

September 2023

TABLE OF CONTENTS

Page No.

SECTION 1 - GENERAL PROVISIONS 1-1
1.1 Scope 1-1
1.2 Authority 1-1
1.3 Interpretations 1-1
1.4 Appeals 1-1
1.5 Approvals and Permits Required 1-1
1.5.1 Grading Permit 1-1
1.5.2 National Pollutant Discharge Elimination System (NPDES) Stormwater Permit 1-1
1.5.3 USACE Section 404 Permit 1-2
1.6 Coordination with Other Jurisdictions 1-3
1.6.1 Additional Design Requirements 1-3
1.6.2 Additional Submittal Requirements 1-3
1.6.3 Requirements for Utility Relocations 1-3
1.7 Communications and Correspondence 1-3
1.8 Ownership and Maintenance 1-3
1.8.1 Improvements on Public Road Right-of-Way. 1-3
1.8.2 Improvements on Private Property. 1-3

SECTION 2 - PLANNING AND DESIGN 2-1
2.1 Stormwater Management Requirements 2-1
2.2 Scenarios to be Modeled 2-2
2.2.1 Case 1: Existing Conditions 2-2
2.2.2 Case 2: Post-Project Conditions 2-2
2.2.3 Case 3: Post-Project with Fully Developed Watershed 2-2

SECTION 3 - HYDROLOGIC ANALYSES 3-1
3.1 Scope 3-1
3.2 Methodology 3-1
3.3 Rational Method 3-1
3.3.1 General Guidelines 3-1
3.3.2 Rational Formula 3-1
3.3.3 Precipitation 3-2
3.4 SCS Unit Hydrograph Method 3-3
3.4.1 General Guidelines 3-3
3.4.2 Study Area 3-3
3.4.3 Precipitation 3-3
3.5 Runoff Curve Number Determination 3-6
3.5.1 General 3-6
3.5.2 Soils 3-6
3.6 Time of Concentration 3-8
3.6.1 Initial, Inlet or Overland Flow 3-8
3.6.2 Shallow Concentrated Flow 3-9
3.6.3 Open Channel Flow 3-10

3.7 Model Verification....3-11

SECTION 4 - STORM SEWER SYSTEMS....4-1
4.1 Storm Sewers....4-1
4.1.1 Level of Service Requirements....4-1
4.1.2 In-System Capacity....4-1
4.1.3 Overflow Systems....4-1
4.1.4 Extent of Enclosed System....4-1
4.1.5 Minimum Pipe Size....4-1
4.1.6 Construction Materials....4-2
4.1.7 Vertical Alignment....4-3
4.1.8 Horizontal Alignment....4-4
4.1.9 Storm Sewer Outlets....4-4
4.1.10 Hydraulics....4-4
4.2 Inlets....4-8
4.2.1 Inlet Locations....4-8
4.2.2 Inlet Interception Capacities....4-8
4.2.3 Clogging Factors....4-8
4.2.4 Interception and Bypass Flow....4-9
4.2.5 Types of Inlets Allowed....4-9
4.2.6 General Safety Requirements....4-9
4.3 Pavement Drainage....4-10
4.3.1 General Design Requirements....4-10
4.3.2 Local Streets....4-10
4.3.3 Collector Streets....4-10
4.3.4 Arterials and Parkways....4-10
4.3.5 Cross Flow....4-10
4.3.6 Hydraulics....4-11

SECTION 5 - CULVERTS....5-1
5.1 Structural Design....5-1
5.2 Design Capacity....5-1
5.3 Headwater....5-1
5.4 Inlet and Outlet Protection....5-1
5.5 Velocity Limitations....5-1
5.6 Culvert Hydraulics....5-1

SECTION 6 - BRIDGES....6-1
6.1 Structural Design....6-1
6.2 Design Capacity....6-1
6.3 Backwater....6-1
6.4 Velocity Limitations....6-1
6.5 Bridge Hydraulics....6-1

SECTION 7 - OPEN CHANNELS....7-1
7.1 General Design Guidelines....7-1
7.1.1 Natural Channels....7-1
7.1.2 Grass Lined Channels....7-1
7.1.3 Concrete Lined Channels....7-1

7.1.4 Rock Lined Channels 7-1
7.1.5 Other Lining Types 7-1
7.2 Hydraulics 7-1
7.2.1 Uniform Flow 7-1
7.2.2 Critical Flow 7-2
7.2.3 Gradually Varied Flow 7-2
7.3 Design Standards 7-3
7.3.1 Flow Velocity 7-3
7.3.2 Freeboard Requirements 7-3
7.3.3 Curvature 7-3
7.3.4 Super Elevation 7-3
7.3.5 Grass Channels 7-4

SECTION 8 - STORMWATER DETENTION 8-1
8.1 Policies for Stormwater Detention 8-1
8.1.1 Goals and Objectives 8-1
8.1.2 Justified Exceptions 8-1
8.1.3 Innovation in Design 8-2
8.2 Stormwater Management Criteria 8-2
8.3 Design Criteria 8-2
8.3.1 Discharge Locations 8-2
8.3.2 Freeboard 8-2
8.3.3 Embankment Slopes 8-2
8.3.4 Emergency Overflow Spillway 8-2
8.3.5 Special Release Rates 8-3
8.3.6 Bottom Slope 8-3
8.3.7 Trickle Channels 8-3
8.3.8 Detention in Parking Lots 8-3
8.4 Detailed Analysis 8-4
8.5 Submittals 8-4
8.5.1 Analytical Methods 8-4
8.5.2 Mapping 8-5
8.5.3 Engineering Stormwater Report for Stormwater Flood Control and Water Quality 8-5
8.6 Control Structures 8-6
8.7 Detailed Submittal Plans and Drawings 8-7
8.8 Water Quality Requirements 8-7
8.8.1 Purpose 8-7
8.8.2 General Design Guidelines for Water Quality 8-8
8.8.3 Design Criteria 8-9

SECTION 9 - SINKHOLES AND KARST FEATURES 9-1
9.1 General 9-1
9.2 Policy 9-1
9.3 Definitions 9-2
9.4 Permits Required 9-3
9.4.1 Grading Permit 9-3
9.4.2 Other Permits 9-3
9.5 General Plan Requirements 9-3
9.6 Sinkhole Evaluation 9-3

9.6.1 Site Plan....9-3
9.6.2 Drainage Area Map....9-4
9.6.3 Assessment of Impacts....9-4
9.7 Flooding Considerations....9-4
9.7.1 Minimum Flooding Analysis....9-4
9.7.2 Detailed Flooding Analysis....9-5
9.8 Water Quality Considerations....9-6
9.8.1 Requirements....9-6
9.8.2 Receiving Groundwater Use....9-6
9.8.3 Groundwater Contamination Hazard....9-7
9.8.4 Capturing and Filtering Pollutants....9-8
9.8.5 Water Quality Management Measures....9-8
9.9 Development Requirements....9-10
9.9.1 Stormwater Detention in Sinkholes....9-10
9.9.2 Modification of Sinkholes to Increase Outflow Rates....9-10
9.9.3 Setbacks and Use Restrictions....9-10
9.9.4 Collapsed Sinkholes....9-11
9.9.5 Altered Sinkholes....9-11

SECTION 10 - GRADING, SEDIMENT AND EROSION CONTROL....10-1
10.1 Goals and Objectives....10-1
10.2 General Design Guidelines....10-1
10.2.1 Temporary Versus Permanent Controls....10-1
10.2.2 Sheet Flow Versus Concentrated Flow....10-1
10.2.3 Slope....10-1
10.2.4 Soils and Geologic Setting....10-2
10.2.5 Environmentally Sensitive Areas....10-2
10.3 Grading Permits....10-2
10.3.1 Permit Requirements....10-2
10.3.2 Permit Procedure....10-2
10.3.3 Plan Requirements....10-3
10.4 Other Permits....10-3
10.4.1 NPDES Stormwater Permit....10-3
10.4.2 Missouri Land Disturbance Permit....10-3
10.4.3 USACE Section 404 Permit and State issued 401....10-3
10.5 Design Standards and Criteria....10-3
10.5.1 Grading....10-3
10.5.2 Sediment Containment....10-4
10.5.3 Erosion Protection....10-6
10.5.4 Temporary Construction Entrance....10-9
10.5.5 Cleaning Streets....10-10
10.5.6 Dust Control....10-10
10.5.7 Sequencing and Scheduling....10-10

SECTION 11 - WORKS CITED....11-1

LIST OF TABLES

Page No.

Table 1-1. Minimum Easement Width..... 1-4
Table 3-1: Rainfall Intensity-Duration-Frequency Relationships from Rainfall Frequency Atlas of the Midwest (Huff & Angel, 1992) 3-2
Table 3-2: Rainfall Depth-Duration-Frequency Relationships from Rainfall Frequency Atlas of the Midwest 3-4
Table 3-3: Huff Distribution for Drainage Areas from 0 to 10 Square Miles 3-4
Table 3-4: Guidelines for Minimum Storm Duration Based on Watershed Size 3-5
Table 3-5: Runoff Curve Number Values for Undeveloped Lands 3-7
Table 3-6: Runoff Curve Number Values for Developed, Urban Areas 3-7
Table 3-7: Roughness Coefficients (Manning's n) for Sheet Flow 3-9
Table 4-1: Allowable Installation Based on Pipe Material 4-3
Table 4-2: Pipe Roughness Coefficients 4-6
Table 4-3: Head Loss Coefficients for Structures 4-7
Table 4-4: Inlet Clogging Factors 4-8
Table 4-5: Allowable Cross Flow Depths 4-11
Table 5-1: Minimum Requirements for Inlet and Outlet Protection 5-1
Table 7-1: Allowable Flow Velocity for Channels 7-3
Table 7-2: Typical Manning's Roughness Coefficients for Channels 7-4

LIST OF FIGURES

Page No.

Figure 1-1: U.S. Army Corps of Engineers District Boundaries 1-2

Figure 3-1: Rainfall Intensity-Duration-Frequency Relationships from Rainfall Frequency Atlas of the Midwest 3-3

ADDITIONAL DRAWING DETAILS

Drawing 10 – Seed and Mulch Specifications

Drawing 30 – Diversion Dike and Swale

Drawing 50 – Straw Bale Dike

Drawing 70 – Riprap Chute (Refer to City Standard Construction Specifications for Updated Drawing)

Drawing 80 – Sediment Basin – Perforated Pipe Outlet

Drawing 90 – Sod Channel less than 15’ and greater than 15’

Drawing 120 – Outlet Erosion Protection Culvert and Storm Sewer Outlets

Drawing 130 – Curb Opening

Drawing 140 – Curb Inlet Detail

Note: Additional drawing details are provided in the Standard Specifications Details for Water and Sewer Construction, related to Stormwater Infrastructure

Standard Detail #37 – Curb inlets 18” or Less

Standard Detail #38 – Curb inlets 21” or Greater

Standard Detail #39 – Top Slab Reinforcement

Standard Detail #40 – Ring and Cover for Inlet

Standard Detail #41 – Concrete Culvert Cap – Driveways

Standard Detail #42 – Riprap

SECTION 1 - GENERAL PROVISIONS

1.1 Scope

These design criteria set forth in the minimum standards for design of storm drainage facilities on public right-of-way and private property in the City of Republic.

1.2 Authority

These design criteria and standards set forth herein have been adopted by the Planning and Zoning Commission and the City Council in accordance with the procedures and authority set forth in the City of Republic.

Any development or grading begun after the date of passage of these criteria and standards which does not comply with the requirements set forth herein shall be deemed to be in violation of the requirements established herein; and shall be subject to enforcement measures and penalties set forth in City of Republic, Missouri municipal code, Section 100.220 — General Penalty.

1.3 Interpretations

Where any of the provisions contained herein may be unclear or ambiguous as they pertain to a particular site or situation, interpretations of the policies, criteria and standards set forth herein shall be made in writing by the Engineering Manager.

Such written interpretations shall be kept on file for future reference for use in similar situations and shall be incorporated in subsequent revisions for the standards, if deemed necessary for general reference.

1.4 Appeals

Where disagreements may arise over the interpretation of the requirements set forth herein, appeals may be made to the City Planner upon written request.

Information and supporting documentation for the appeal shall be submitted with the request. The City Planner shall forward the information to the Builds Administrator and the City Engineer within three (3) calendar days following receipt of the information.

1.5 Approvals and Permits Required

1.5.1 Grading Permit

Storm drainage facilities may not be constructed or altered without review and approval of the plans by the City and issuance of a Grading Permit by the City for subdivisions, commercial and other sites which may not fall under the criteria specified herein.

1.5.2 National Pollutant Discharge Elimination System (NPDES) Stormwater Permit

Provisions of the 1987 Clean Water Act require that certain stormwater discharges obtain an NPDES stormwater permit. In Missouri, these permits are administered by the Missouri Department of Natural Resources.

Federal rules for NPDES stormwater discharges are contained in 40 CFR Parts 122, 123 and 124 of the Code of Federal Regulations. State NPDES stormwater regulations are contained in 10 CSR 20-6.200 of the Code of State Regulations. Additional provisions for NPDES stormwater

permits for land disturbance activities and information regarding the City of Republic General Permit for land disturbance activities are contained in Section 10 of these criteria.

1.5.2.1 Missouri Land Disturbance Permit

Effective December 8, 1999, construction sites where the area to be disturbed is one acre or more or less than one acre but part of a common plan of development will require a Missouri Land Disturbance permit.

1.5.3 USACE Section 404 Permit

1.5.3.1 General Requirement

For certain activities, which involve the discharge of dredged or fill materials into the waters of the United States a Department of the Army permit may be required as set forth in Section 404 of the Clean Water Act. Rules for 404 permits are contained in 33 CFR Parts 320 through 330 of the Code of Federal Regulations.

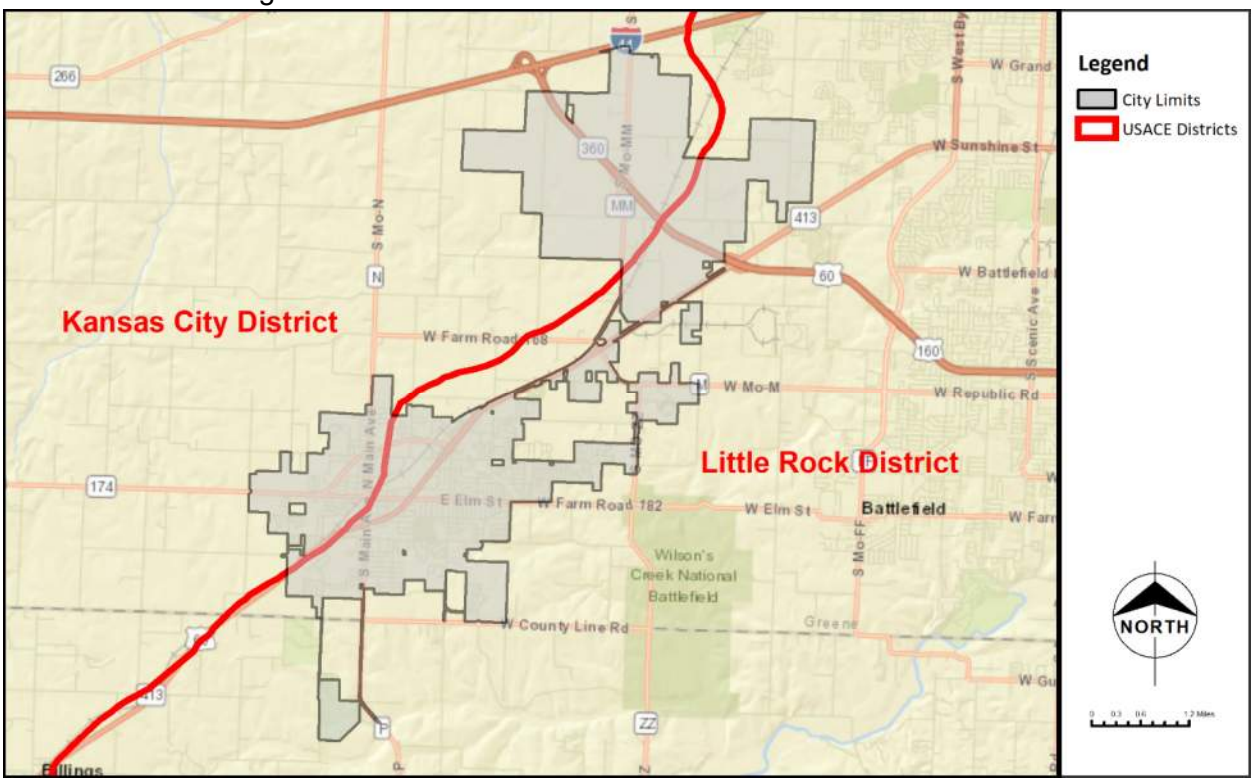

Figure 1-1: U.S. Army Corps of Engineers District Boundaries

1.5.3.2 Determination of Applicability

Determination of applicability for Section 404 requirements are made by either the Kansas City or Little Rock District office of the U. S. Army Corps of Engineers. Figure 1-1 shows the boundary of each district with respect to City limits.

Section 404 permitting requirements for the Kansas City District can be found at the following web page: https://www.nwk.usace.army.mil/Missions/Regulatory-Branch/

Section 404 permitting requirements for the Little Rock District can be found at the following web page:https://www.swl.usace.army.mil/Missions/Regulatory/Applying-for-a-Permit/

If the Army Corps of Engineers determines a 404 permit is required, the project must also be submitted to the state of Missouri for a Section 401 Water Quality Certification: Section 401 Water Quality Certification | Missouri Department of Natural Resources (mo.gov).

1.6 Coordination with Other Jurisdictions

1.6.1 Additional Design Requirements

Where proposed storm drainage facilities are located on property adjoining to other local government jurisdictions, design of storm drainage facilities shall include provisions to receive or discharge stormwater in accordance with the requirements of the adjoining jurisdiction, in addition to meeting City requirements.

1.6.2 Additional Submittal Requirements

In these cases, two (2) additional sets of plans shall be submitted and will be forwarded to the adjoining jurisdiction for review and comment.

1.6.3 Requirements for Utility Relocations

No grading or construction of storm drainage facilities may commence without prior notification of the Missouri One Call utility warning system at 1-800-DIG-RITE, as required by law.

1.7 Communications and Correspondence

Communications and correspondence regarding stormwater plan review, policies, design standards, criteria or drainage complaints shall be directed to the City Planner at the City of Republic, 213 N. Main, Republic, Missouri 65738, Phone: 417-732-3354.

1.8 Ownership and Maintenance

1.8.1 Improvements on Public Road Right-of-Way.

Storm drainage improvements on public right-of-way shall, upon acceptance of the constructed improvements, become the property of; and shall be maintained by the City of Republic.

1.8.2 Improvements on Private Property.

1.8.2.1 Maintenance Responsibility

Storm drainage improvements on private property shall be maintained by the owner of the lot upon which the improvements are located or by the Homeowners' Association for improvements located in common areas.

1.8.2.2 Drainage Easements

All such improvements, which serve to convey, detain, or retain stormwater runoff, shall be in drainage easement. The City shall have such rights of access to repair or maintain such facilities as set forth herein. If said improvements are located within private property, such as parking lots, or "common areas" the City shall have such rights of access for repair or maintenance work when required. Note that maintenance responsibilities on private property shall be as specified in Section 1.8.2.1.

The minimum easement width shall be as specified in Table 1-1.

Table 1-1. Minimum Easement Width

Stormwater Improvement System	Minimum Easement Width
42-inch diameter or less	15 feet
> 42-inch diameter	20 feet
Reinforced Concrete Box	15 feet wider than box outer wall
Open Channel (Vegetated)	Entire Channel Width + 5 feet each side
Impervious Channel (Structural)	10 feet wider than Channel (5 feet beyond the outside edge of the structure on each side)
Natural/Unimproved Channel	100-year Flood Boundary + 5 feet each side if applicable
Notes: *a. The City may require additional width to provide access to stormwater improvements.*	

1.8.2.3 Construction Easements

All easements required for construction, which are not included on the final plat shall be recorded and filed with the City prior to approval of the construction drawings.

SECTION 2 - PLANNING AND DESIGN

2.1 Stormwater Management Requirements

To promote protection of the general health and welfare of the citizens of the City of Republic, planning and design of stormwater management measures shall meet the following requirements:

- To work in conjunction with the City's MS4 Stormwater Management Plan for the City of Republic.
- Prevent damage to residential dwellings and other building structures from flood waters.
- Maintain emergency vehicle access to all areas during periods of high water.
- Prevent damage to roads, bridges, utilities, and other valuable components of the City's infrastructure from damage due to flood waters and erosion.
- Prevent degradation of surface and groundwater quality from stormwater runoff; preserve and protect quality of the environment; and promote conservation of the City's natural resources.
- Minimize floodwater and erosion damage to lawns, recreational facilities, and other outdoor improvements.
- Minimize traffic hazards from runoff conveyed in streets and roads.
- Comply with applicable State and Federal laws and regulations, not limited to National Pollutant Discharge Elimination System (NPDES) Municipal Separate Storm Sewer System (MS4) program
- Encourage innovative and cost-effective planning and design of stormwater management facilities.
- Encourage multiple purpose design of stormwater management facilities, to provide opportunities for recreational use and other benefits to the community wherever possible.
- Meet the foregoing requirements in a manner which is cost effective and which minimizes the cost of housing and development while encouraging sound development practices.
- Implement and enforce a program to address the quality of long-term stormwater runoff from new development and redevelopment projects that disturb equal to and greater than one acre, including projects less than one acre that are part of a larger common plan of development.

The standards and criteria set forth herein provide the minimum standards for planning and design of stormwater facilities. Where a particular plan or design may be found to conflict with a specific standard, the City may waive certain standard(s) in order to achieve a requirement listed.

2.2 Scenarios to be Modeled

To achieve the requirements stated above, hydrologic and hydraulic analyses must be prepared and submitted to the City to demonstrate the impacts of a project on the existing watershed and stormwater conveyance systems. To evaluate the impacts, three scenarios shall be considered for the hydrologic and hydraulic analyses required herein:

2.2.1 Case 1: Existing Conditions

Existing conditions in the drainage basin prior to development of the applicant's property.

2.2.2 Case 2: Post-Project Conditions

Existing conditions in the drainage basin with developed conditions on the applicant's property.

2.2.3 Case 3: Post-Project with Fully Developed Watershed

Fully developed conditions in the entire drainage basin.

SECTION 3 - HYDROLOGIC ANALYSES

3.1 Scope

This section sets forth the hydrologic methods and parameters to be used for computations involving the definition of runoff mass and peak rates to be accommodated by the storm drainage system. These methods are to be used for calculating runoff mass and peak rates for the design of stormwater conveyance and storage systems.

3.2 Methodology

Runoff rates to be accommodated by each element of the proposed storm drainage system shall be calculated using the criteria of this section for land use runoff factors, rainfall, and system time. The following methods of computation are to be used.

3.3 Rational Method

3.3.1 General Guidelines

The Rational Method is acceptable for drainage areas less than 100 acres when only peak flow rates are needed. However, the City reserves the right to require the use of the Unit Hydrograph method for drainage areas less than 100 acres in cases where land use in the watershed is non-homogeneous or areas of storage exist in the watershed.

The basic assumptions made when applying the rational formula are as follows:

- The rainfall intensity is uniform over the basin during the entire storm duration.
- The maximum runoff rate occurs when the rainfall lasts as long or longer than the basin time of concentration.
- Runoff response characteristics are relatively uniform over the entire basin.
- The time of concentration is the time required for the runoff from the most hydraulically remote part of the basin to reach the point of interest.

The drainage basin should be divided into sub-basins of a size where all the basic assumptions apply.

3.3.2 Rational Formula

The rational formula, when properly understood and applied, can produce satisfactory results for urban storm sewer design. The rational formula is as follows:

$$\boldsymbol{Q = C \times i \times A} \qquad \text{(Equation 3.1)}$$

Where:

Q = Peak discharge in cubic feet per second.

C = Runoff coefficient which is the ratio of the maximum rate of runoff from the area to the average rate of rainfall intensity for the time of concentration.

i = Average rainfall intensity in inches per hour for a duration equal to the time of concentration.

A = Contributing watershed area in acres.

3.3.3 Precipitation

For Rational Method analysis, rainfall intensity in inches per hour must be determined from an event with a duration equivalent to the time of concentration. **Table 3-1** and **Figure 3-1** provide depth and intensity values for various rainfall durations and frequencies in the Republic, Missouri area. The City may approve use of updated precipitation data as specified in NOAA Atlas 14.

Table 3-1: Rainfall Intensity-Duration-Frequency Relationships from Rainfall Frequency Atlas of the Midwest (Huff & Angel, 1992)

	Depth of Precipitation (in)						
Duration	**1-year**	**2-year**	**5-year**	**10-year**	**25-year**	**50-year**	**100-year**
5 min	4.32	5.4	6.84	8.04	9.48	10.56	11.76
10 min	3.78	4.74	6.06	7.02	8.28	9.24	10.32
15 min	3.24	4.08	5.16	6.00	7.08	7.92	8.84
30 min	2.22	2.78	3.54	4.10	4.86	5.44	6.06
1-hour	1.41	1.77	2.25	2.61	3.08	3.45	3.84
2-hour	0.87	1.10	1.39	1.61	1.90	2.13	2.37
3-hour	0.64	0.80	1.02	1.18	1.40	1.57	1.75
6-hour	0.38	0.47	0.60	0.69	0.82	0.92	1.02
12-hour	0.22	0.27	0.35	0.40	0.48	0.53	0.59
18-hour	0.16	0.20	0.25	0.29	0.34	0.38	0.43
24-hour	0.13	0.16	0.2	0.23	0.27	0.31	0.34
48-hour	0.07	0.09	0.11	0.13	0.15	0.17	0.19
72-hour	0.05	0.06	0.08	0.09	0.11	0.12	0.14
120-hour	0.03	0.04	0.05	0.06	0.07	0.08	0.09
240-hour	0.02	0.03	0.03	0.04	0.04	0.05	0.05

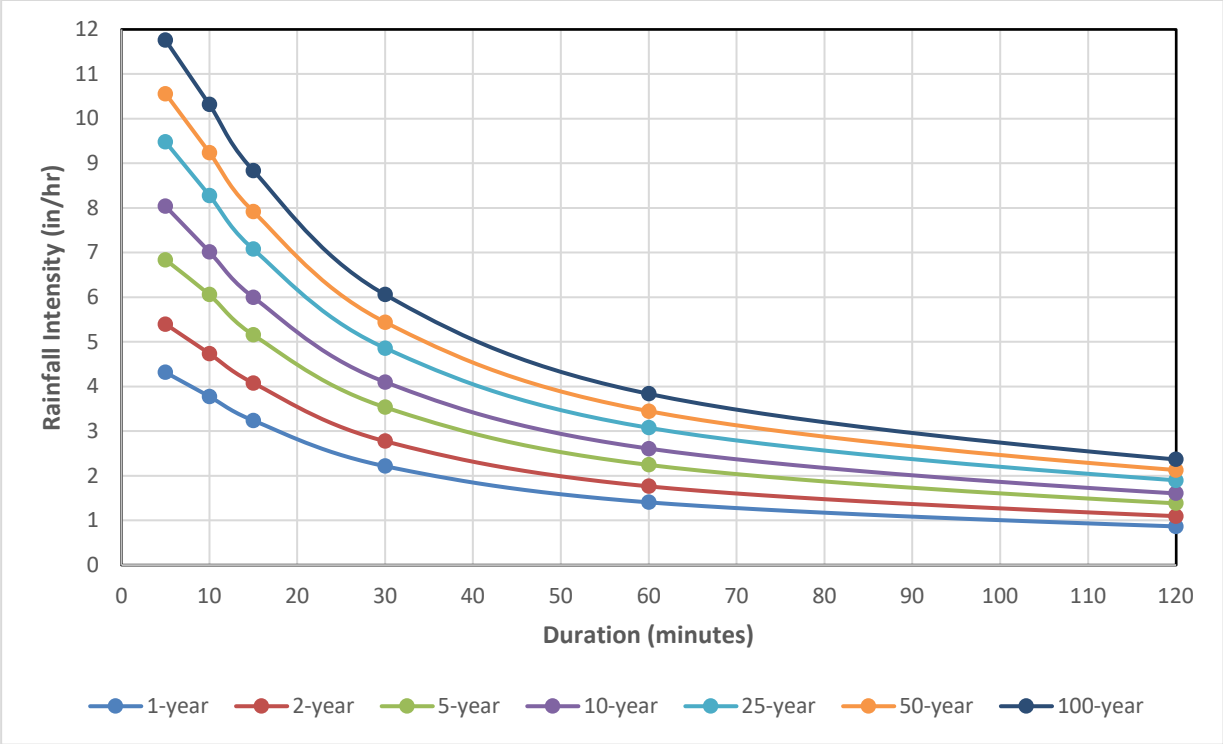

Figure 3-1: Rainfall Intensity-Duration-Frequency Relationships from Rainfall Frequency Atlas of the Midwest

3.4 SCS Unit Hydrograph Method

3.4.1 General Guidelines

The SCS Unit Hydrograph Method (Natural Resources Conservation Service, 1986) is acceptable for any size watershed and appropriate for complex watersheds and is the City's preferred method. The method to be used for all hydrologic analyses. This method shall be used with the Huff temporal rainfall distribution. The Engineer may use any computer software package that incorporates the SCS Unit Hydrograph Method for calculating runoff.

3.4.2 Study Area

The hydrologic model must include the entire drainage basin upstream of the proposed development.

The model shall be prepared in sufficient detail to ensure that peak runoff rates are reasonably accurate.

3.4.3 Precipitation

3.4.3.1 Precipitation Depths

Rainfall depths to be used with the SCS Unit Hydrograph Method shall be as shown in Table 3-2. Rainfall depths shown have been taken from *Rainfall Frequency Atlas of the Midwest* (Huff & Angel, 1992). The City may approve use of updated precipitation data as specified in NOAA Atlas 14.

Table 3-2: Rainfall Depth-Duration-Frequency Relationships from Rainfall Frequency Atlas of the Midwest

Duration	Depth of Precipitation (in)						
	1-year	2-year	5-year	10-year	25-year	50-year	100-year
5 min	0.36	0.45	0.57	0.67	0.79	0.88	0.98
10 min	0.63	0.79	1.01	1.17	1.38	1.54	1.72
15 min	0.81	1.02	1.29	1.50	1.77	1.98	2.21
30 min	1.11	1.39	1.77	2.05	2.43	2.72	3.03
1-hour	1.41	1.77	2.25	2.61	3.08	3.45	3.84
2-hour	1.74	2.19	2.78	3.22	3.80	4.26	4.74
3-hour	1.92	2.41	3.07	3.55	4.20	4.70	5.24
6-hour	2.25	2.83	3.59	4.16	4.92	5.51	6.14
12-hour	2.61	3.28	4.17	4.83	5.71	6.39	7.12
18-hour	2.82	3.54	4.50	5.22	6.17	6.90	7.69
24-hour	3.00	3.77	4.79	5.55	6.56	7.34	8.18
48-hour	3.30	4.14	5.25	6.07	7.17	8.05	8.97
72-hour	3.68	4.62	5.81	6.69	7.90	8.85	9.85
120-hour	4.16	5.21	6.50	7.45	8.70	9.68	10.77
240-hour	5.37	6.59	8.05	9.13	10.49	11.52	12.61

3.4.3.2 Rainfall Distribution

The Huff rainfall distribution (Huff & Angel, 1992) shall be used for the temporal distribution. The Huff distribution is presented in **Table 3-3** and is expressed as cumulative percentages of total duration and total rainfall accumulation. Different families of Huff rainfall distribution curves are applicable for different drainage areas. **Table 3-3** is applicable to drainage areas less than 10 square miles. For larger drainage areas, refer to the *Rainfall Frequency Atlas of the Midwest* (Huff & Angel, 1992).

Each family of curves consists of four storms (1st Quartile, 2nd Quartile, 3rd Quartile, and 4th Quartile) that correspond to the quartile within the storm event when the bulk of the rainfall occurs. Storms with durations of 6 hours or less, 6 to 12 hours, 12 to 24 hours, and greater than 24 hours tend to be associated with the first-, second-, third-, and fourth-quartile storms, respectively (City of Springfield, 2018).

Table 3-3: Huff Distribution for Drainage Areas from 0 to 10 Square Miles

Cumulative Storm Time (%)	Cumulative Storm Rainfall (%) for Given Storm Type			
	1st Quartile (Duration ≤ 6 hours)	2nd Quartile (6 < Duration ≤ 12 hours)	3rd Quartile (12 < Duration ≤ 24 hours)	4th Quartile (Duration > 24 hours)
0	0	0	0	0
5	16	3	3	2
10	33	8	6	5

Table 3-3: Huff Distribution for Drainage Areas from 0 to 10 Square Miles

Cumulative Storm Time (%)	Cumulative Storm Rainfall (%) for Given Storm Type			
	1st Quartile (Duration ≤ 6 hours)	2nd Quartile (6 < Duration ≤ 12 hours)	3rd Quartile (12 < Duration ≤ 24 hours)	4th Quartile (Duration > 24 hours)
15	43	12	9	8
20	52	16	12	10
25	60	22	15	13
30	66	29	19	16
35	71	39	23	19
40	75	51	27	22
45	79	62	32	25
50	82	70	38	28
55	84	76	45	32
60	86	81	57	35
65	88	85	70	39
70	90	88	79	45
75	92	91	85	51
80	94	93	89	59
85	96	95	92	72
90	97	97	95	84
95	98	98	97	92
100	100	100	100	100

3.4.3.3 Rainfall Duration

A critical duration analysis should be performed to determine the duration that maximizes peak runoff rates for the watershed being analyzed. A critical duration analysis should involve applying the hydrograph-based methods to events with durations ranging from 30 minutes to 24 hours to determine the duration that produces the largest peak runoff rate for the watershed.

Guidelines for the minimum recommended storm duration based on watershed size are shown in **Table 3-4**. The guidelines are intended to preclude the use of short duration events that typically do not cover the corresponding watershed uniformly. The information in **Table 3-4** should be considered as guidance for the minimum storm duration to use when calculating runoff and is not a replacement for a critical duration analysis (City of Springfield, 2018).

Table 3-4: Guidelines for Minimum Storm Duration Based on Watershed Size

Watershed Size	Minimum Recommended Duration
< 160 acres	30-minute
160 acres – < 1 sq. mi.	1-hour

Table 3-4: Guidelines for Minimum Storm Duration Based on Watershed Size

Watershed Size	Minimum Recommended Duration
1 sq. mi. – < 4 sq. mi.	2-hour
4 sq. mi. – < 8 sq. mi.	3-hour
8 sq. mi. – < 16 sq. mi.	6-hour
16 sq. mi. – < 32 sq. mi.	12-hour
> 32 sq. mi	24-hour

3.5 Runoff Curve Number Determination

3.5.1 General

The determination of the runoff Curve Number (CN) value for a watershed is a function of soil characteristics, hydrologic condition and cover, or land use. CN values for undeveloped and developed areas are provided in Table 3-5 and Table 3-6, respectively. For watersheds with multiple soil types or land uses, an area weighted CN should be calculated. When significant differences in land use or natural control points exist, the watershed should be broken into smaller drainage areas for modeling purposes.

3.5.2 Soils

Soils are classified into hydrologic soil groups (HSG) as an indicator of infiltration rate. The HSGs are A, B, C, and D, with A having the highest infiltration rate and D having the lowest (Natural Resources Conservation Service, 1986). The HSG and land cover are used in determining the CN value. The United States Department of Agriculture (USDA) makes available a Web Soil Survey website with HSG's for a specific location which can be used to estimate runoff curve numbers (Natural Resources Conservation Service, 2019):

http://websoilsurvey.sc.egov.usda.gov/App/HomePage.htm

To minimize increases in post-development runoff volume and discharge of sediment, it is important to preserve natural soil profiles, minimize total land disturbance and minimize the consolidation of in-situ soils through compaction under the weight of heavy equipment. Following these practices can provide cost savings in reduced grading, reduced infrastructure and detention and water quality treatment. For areas where the soil profile has been disturbed, the HSG should be adjusted up one level (i.e., from A to B, B to C, or C to D) unless it can be shown that the predevelopment soil profile has been reestablished through soil amendments.

Table 3-5: Runoff Curve Number Values for Undeveloped Lands

Land Use / Cover Description	Hydrologic Soils Group			
	A	B	C	D
Pasture, grassland, or range—continuous forage for grazing: Good condition (ground cover > 75% and only occasionally grazed)	39	61	74	80
Meadow—continuous grass, protected from grazing, and generally mowed for hay	30	58	71	78
Woods-grass (50%-50%) combination, orchard or tree farm Other combinations can be calculated as composite of pasture and woods, good condition	32	58	72	79
Woods, Good condition (i.e., woods are protected from grazing, and litter and brush adequately cover the soil)	30	55	70	77
Farmsteads—buildings, lanes, driveways, and surrounding lots	59	74	82	86

Notes:

1. CN for use with SCS Unit Hydrograph Method for average runoff conditions (initial abstractions = 0.2 x Maximum Runoff Retention) (Natural Resources Conservation Service, 1986).
2. Typical cover condition in Republic area is “good.” “Fair” or “poor” condition must be demonstrated by engineer prior to City approval of associated CN adjustments.

Table 3-6: Runoff Curve Number Values for Developed, Urban Areas

Land Use / Cover Description	Avg % Impervious	Hydrologic Soils Group			
		A	B	C	D
Open Space Lawns					
Good condition (grass cover > 75%)		39	61	74	80
Fair condition (grass cover 50% to 75%)		49	69	79	84
Poor condition (grass cover less than 50%)		68	79	86	89
Impervious areas:					
Paved parking lots, roofs, driveways, compacted gravel, etc. (excluding right-of-way)		98	98	98	98
Small open spaces within developments or ROW:		72	82	87	89
Streets and Roads		90	93	95	97
Paved; curbs and storm sewers (including right-of-way)		83	89	92	93
Paved; open ditches (including right-of-way)		76	85	89	81

Table 3-6: Runoff Curve Number Values for Developed, Urban Areas

Gravel (including right-of-way)		72	82	87	89
Urban Districts					
Commercial and business	85	89	92	94	95
Industrial	72	81	88	91	93
Residential districts by average lot size					
1/8 acre or less (townhouses)	65	77	85	90	92
1/4 acre	38	61	75	83	87
1/3 acre	30	57	72	81	86
1/2 acre	25	54	70	80	85
1 acre	20	51	68	79	84
2 acres	12	46	65	77	82
Newly graded areas (pervious areas only, no vegetation)		77	86	91	94

Notes:

1. CN for use with SCS Unit Hydrograph Method for average runoff conditions (initial abstractions = 0.2 x Maximum Runoff Retention) (Natural Resources Conservation Service, 1986).
2. Typical cover condition in Republic area is “good.” “Fair” or “poor” condition must be demonstrated by engineer prior to City approval of associated CN adjustments.
3. This table is based on average antecedent soil moisture conditions. See Section 3.5.1 for further discussion.
4. Curve numbers provided for streets and roads are typical for residential or collector streets. Curve numbers for arterials and heavily developed areas should be calculated.
5. Curve numbers provided for urban districts are a typical composite of large areas. Curve numbers for individual sites should be calculated based on the proposed development.

3.6 Time of Concentration

Time of concentration shall be calculated using the methodologies described by the NRCS (Natural Resources Conservation Service, 1986) and as follows:

$$T_c = T_i + \sum T_t \qquad \text{(Equation 3.2)}$$

Where

T_c = time of concentration, minutes

T_i = initial, inlet or overland flow time in minutes

T_t = sum of the travel times for shallow concentrated flow and open channel flow time in minutes.

3.6.1 Initial, Inlet or Overland Flow

Initial, Inlet or Overland Flow time shall be calculated using the following equation:

$$T_i = \frac{0.007(n \times L)^{0.8}}{4.64 \times s^{0.4}}$$ (Equation 3.3)

Where

n = Manning's n for sheet flow (see Table 3-7 (Natural Resources Conservation Service, 1986))

L = flow length (feet), (maximum of 300 feet)

s = slope of hydraulic grade line (land slope, ft/ft)

Table 3-7: Roughness Coefficients (Manning's n) for Sheet Flow

Surface Description	Manning's n
Smooth surfaces (concrete, asphalt, gravel or bare soil)	0.011
Fallow (no residue)	0.05
Cultivated soils:	
Residue cover less than or equal to 20%	0.06
Residue cover greater than or equal to 20%	0.17
Grass:	
Short grass prairie	0.15
Dense grasses[1]	0.24
Bermuda grass	0.41
Range (natural)	0.13
Woods[2]	
Light underbrush	0.40
Dense underbrush	0.80
Notes [1] Includes species such as weeping lovegrass, bluegrass, buffalo grass, blue grama grass and native grass mixtures. [2] When selecting n, consider covering to a height of about 0.1 feet. This is the only part of the plant cover that will obstruct sheet flow.	

3.6.2 Shallow Concentrated Flow

Travel time for shallow concentrated flow shall be calculated in accordance with the methods following equations:

$$T_t = \frac{L}{60 \times V} \quad \text{(Equation 3.4)}$$

Where

T_t = travel time for shallow concentrated flow (minutes)

L = Length of shallow concentrated flow path (feet) (maximum of 1,500 feet)

For flow in unpaved areas, flow velocity shall be calculated as follows:

$$V = 16.1345 \times s^{0.5} \quad \text{(Equation 3.5)}$$

For flow in paved areas, flow velocity shall be calculated as follows:

$$V = 20.3282 \times s^{0.5} \quad \text{(Equation 3.6)}$$

Where:

V = average velocity/ ft/s

s = slope the hydraulic grade line (watercourse slope, ft/ft)

3.6.3 Open Channel Flow

Travel time for open channel flow components shall be calculated using the following equations:

$$T_t = \frac{L}{60 \times V} \quad \text{(Equation 3.7)}$$

Where

T_t = travel time for shallow concentrated flow (minutes)

L = Length of open channel flow (feet)

V = Velocity of open channel flow (ft/s)

Velocity shall be calculated using Manning's Equation:

$$V = \frac{1.486}{n} \times R^{2/3} \times s^{1/2} \quad \text{(Equation 3.8)}$$

Where

n = Manning's roughness coefficient

R = hydraulic radius (feet)

s = slope of the hydraulic grade line (watercourse, ft/ft).

3.7 Model Verification

As a part of hydrologic analysis, a reasonableness check should be conducted on computed peak flow rates and runoff volumes. Reasonableness checks may include methods of calculation such as the Rational Method, the United States Geological Survey (USGS) regression equations, or other methods acceptable to the City. Other checks may include comparison of actual flood data or other flood studies that may have been conducted by the Federal Emergency Management Agency (FEMA), the U.S. Army Corps of Engineers (USACE), or the City.

SECTION 4 - STORM SEWER SYSTEMS

4.1 Storm Sewers

4.1.1 Level of Service Requirements

4.1.2 In-System Capacity

At minimum, storm sewer pipe systems shall be designed to convey the runoff from a 10-year rainfall event while meeting other requirements of this section.

4.1.2.1 Other Systems

100-year Rainfall Event: Pipes shall be designed so the total runoff for the 100-year Rainfall Event can be conveyed in both the storm sewer system and the designed overflow system. Pipe sizes shall be established so that a sufficient amount of flow is conveyed in the pipes so that overflow is contained within the easement provided as required by Section 1.8.2.

Unless otherwise approved by the City, pipes shall be designed for gravity flow, sloping downhill.

4.1.3 Overflow Systems

Each element of the storm sewer system shall include an overflow element. Overflow systems shall be designed to meet the following criteria:

4.1.3.1 Utilization of City Streets

25-year Rainfall Event: Pipes shall be designed so the total runoff for the 25-year Rainfall Event can be conveyed in both the storm sewer system and the roadway. Pipe sizes shall be established so that a sufficient amount of flow is conveyed in the pipes such that the minimum requirements for gutter spread and maximum depth of flow in the street meet the requirements of paragraph 4.3 Pavement Drainage.

100-year Rainfall Event: Pipes shall be designed so the total runoff for the 100-year Rainfall Event can be conveyed in both the storm sewer system and the roadway. Pipe sizes shall be established so that a sufficient amount of flow is conveyed in the pipes so that the minimum requirements for gutter spread and maximum depth of flow in the street meet the requirements of paragraph 4.3 Pavement Drainage.

4.1.3.2 Other Systems

100-year Rainfall Event: Pipes shall be designed so the total runoff for the 100-year Rainfall Event can be conveyed in both the storm sewer system and the designed overflow system. Pipe sizes shall be established so that a sufficient amount of flow is conveyed in the pipes so that overflow is contained within the easement provided as required by Section 1.8.2.

4.1.4 Extent of Enclosed System

The storm sewer system, beginning at the upstream end with inlets, is required when the 5-year peak flow in the street exceeds five (5) cfs or when allowable street depths are exceeded. Allowable street depths are in Section 4.3.

4.1.5 Minimum Pipe Size

The minimum pipe size for storm sewers less than or equal to 50 feet in length (measured between structure or end section) shall be fifteen inches in diameter, unless approved otherwise

by the City. The City, in some instances, will review and may possibly approve the use of smaller pipe sizes for a private storm sewer system which requires a higher flushing velocity. In this case, the City may request additional calculations to be submitted along with the Storm water report to justify the approval for utilizing smaller pipe sizes.

The minimum pipe size for storm sewers greater than 50 feet in length shall be 18 inches in diameter.

4.1.6 Construction Materials

Allowable pipe materials shall be as specified in the following sections.

4.1.6.1 Reinforced Concrete

- Concrete materials shall be 4,000 psi concrete, unless otherwise approved by the City.

4.1.6.2 Reinforced Concrete Pipe

- The design of circular pipe shall conform to ASTM C76, Class III except as modified herein.
- Furnish in lengths of not less than 4'-6", except fittings, closure pieces, and specials.
- Joints shall be rubber and concrete to conform to ASTM C443. Rubber gaskets shall be O-ring cross section.
- An independent testing laboratory shall perform testing and inspection of all material except reinforcing steel. The laboratory shall be acceptable to the City.

4.1.6.3 Corrugated Polyethylene Pipe

- Pipe and fittings shall conform to ASTM F405 and F667 and shall have a circular cross-section.
- End sections shall be polyethylene flared type with toe plates.
- Joints shall be provided with neoprene or manufacturer's standard gaskets.

4.1.6.4 Acceptable Installations based on Pipe Materials

The use of a pipe material specified herein shall be as allowed in Table 4-1.

4.1.6.5 Permanent Signage on all Inlets

All new stormwater inlets shall have permanent signage that states, "No Dumping – Drains to Stream".

Table 4-1: Allowable Installation Based on Pipe Material

Allowable Location	Corrugated Metal	Reinforced Concrete	Corrugated Polyethylene
Culverts under private driveways	✓	✓	✓
Culverts and storm sewers under paved areas		✓	
Culverts and storm sewers under unpaved areas		✓	✓

4.1.7 Vertical Alignment

4.1.7.1 Minimum Cover

The sewer grade shall be such that a minimum cover is maintained to withstand AASHTO HS-20 loading on the pipe. The minimum cover depends upon the pipe size, type and class and soil bedding condition, but shall not be less than one (1) foot from the top of pipe to the finished grade at any point along the pipe.

If the pipe encroaches on the street subgrade, approval is required.

4.1.7.2 Minimum Slope Requirements

The minimum allowable pipe slope shall be 0.5% unless otherwise approved by the City.

4.1.7.3 Requirements for Drainage Structures

Drainage structures (i.e., curb inlets, junction boxes, grate inlets, etc.) shall be required whenever there is a change in size, direction, elevation grade and slope, or where there is a junction of two (2) or more sewers. Provide a 0.2’ fall within the drainage structure between invert of the upstream and downstream pipes. Provide a 0.5’ fall or drop within drainage structure if pipes sharing junction box are not 180 degrees.

4.1.7.4 Structure Spacing

The maximum spacing between structures shall be based on the flow area of the conduit. Maximum spacing shall be as follows:

- Flow area 25 square feet or less: 400 feet
- Flow area more than 25 square feet: 500 feet.

4.1.7.5 Clearances for Water Mains

The Missouri Department of Natural Resources (MDNR) has established the minimum separation requirements between potable water distribution systems and potential sources of contamination such as Non-Potable Fluid Lines (Missouri Department of Natural Resources, 2013). Storm sewer systems fall under the definition of non-potable fluid lines, and the design of construction

of storm sewer systems shall comply with the most recent version of the regulations. The requirements are summarized as follows:

Parallel Installation: Minimum 10 feet measured edge to edge.

Crossings: Minimum 18 inches of separation between the outside of the water main and the outside of the storm sewer. This shall be the case where the water main is either above or below the non-potable pipeline. An 18-inch separation is a structural protection measure to prevent the sewer or water main from settling and breaking the other pipe. At crossings, the full length of water pipe shall be located so both joints will be as far from the non-potable pipeline as possible but in no case less than ten feet or centered on a 20-foot pipe.

Where minimum separation requirements cannot be met, the strategy for protecting the potable water distribution system shall be in accordance with MDNR regulations and shown on the Drawings.

4.1.7.6 Clearances for Sanitary Sewers

The minimum clearance between storm sewer and sanitary sewer (for new construction), either above or below, shall be 18 inches. In addition, when an existing sanitary sewer main lies above a storm sewer or within 18 inches below, the sanitary sewer shall have a concrete encasement or be constructed of structural sewer pipe for a minimum of 10 feet on each side of the storm sewer crossing.

4.1.7.7 Siphons

Siphons or inverted siphons are not allowed in the storm sewer system.

4.1.8 Horizontal Alignment

Storm sewer alignment between manholes or other storm structures shall be straight except when approved by the City. Approved curvilinear storm sewers may be constructed by using radius pipe. The radius requirement for pipe bends is dependent upon the manufacturer's specifications.

The permitted locations for storm sewer within a street right of way are as follows:

- on centerline
- between centerline and curb
- behind the curb.

Storm sewers shall not be placed in the area within the wheel lanes of the pavement.

4.1.9 Storm Sewer Outlets

All storm sewer outlets into open channels shall be constructed with a headwall and wingwalls or a flared-end-section. Riprap or other approved material shall be provided at all outlets.

4.1.10 Hydraulics

Unless otherwise approved by the City, in-system capacity of pipes shall be based on the runoff from a 5-year rainfall event under gravity flow conditions. The flow depth throughout all pipes is to be less than the top of the pipe for the minimum design storm frequency listed above.

4.1.10.1 Gravity Flow

Calculations for gravity flow in pipes shall be done in accordance with HEC Circular No. 22, Section 7 (Federal Highway Administration, 2013).

4.1.10.2 Pressure Flow

Hydraulic design that allows the pipe to be pressurized during events equal to or less than the minimum design frequency shall be done as approved by the City. Calculations for pressure flow in pipes shall be done in accordance with HEC Circular No. 22, Section 7 (Federal Highway Administration, 2013).

4.1.10.3 Allowable Velocities

The maximum full flow velocity shall be 15 feet per second. Higher velocities may be approved by the City if the design includes adequate provisions for uplift forces, dynamic impact forces and abrasion.

The minimum velocity in a pipe based on full flow shall be 2.5 feet per second.

4.1.10.4 Hydraulic Calculations

Presented in this Section are the general procedures for hydraulic design and evaluation of storm sewers. The user is assumed to possess a basic working knowledge of storm sewer hydraulics and is encouraged to review textbooks and other technical literature available on the subject.

4.1.10.4.1 Pipe Friction Losses

Pipe friction losses shall be calculated in accordance with FHWA Hydraulic Engineering Circular No. 22, Section 7.

Pipe friction losses are to be estimated using the following equation:

$$\boldsymbol{H_f = S \times L} \qquad \text{(Equation 4.1)}$$

Where

H_f = head loss due to friction (feet)

S = friction slope from Manning's equation (feet per foot)

L = length of pipe segment (feet)

and

$$\boldsymbol{V = \frac{1.486}{n} \times R^{2/3} \times S^{1/2}} \qquad \text{(Equation 4.2)}$$

And

$$R = \frac{A}{P} \qquad \text{(Equation 4.3)}$$

Where

V = velocity of flow (feet per second)

R = hydraulic radius (feet)

A = area of flow (square feet)

P = wetted perimeter (feet)

S = friction slope (feet per foot) A

n = Manning's roughness coefficient (Table 4-2)

Table 4-2: Pipe Roughness Coefficients

Material	n Value
Reinforced Concrete Culvert (pipe or box)	0.013
CMP 2-2/3 inch x ½-inch Annular Corrugations	0.024[1]
CMP 3-inch x 1-inch Annular Corrugations	0.027[1]
Structural Plate CMP 6-inch x 2-inch Annular Corrugations (5-foot diameter)	0.033
Polypropylene Pipe	0.012
PVC (Private development only)	0.012
HDPE (Private development only)	0.012

NOTES:
1. Manning's n for helically corrugated CMP may be less in certain conditions.
2. Values from City of Springfield (City of Springfield, 2018)

4.1.10.4.2 Exit Losses

Exit Losses shall be calculated in accordance with FHWA Hydraulic Engineering Circular No. 22, Section 7.

When a storm sewer is not flowing full, the sewer acts like an open channel and the hydraulic properties can be calculated using open channel.

Storm sewer outlets. When the storm sewer system discharges into an open channel, additional losses, in the form of expansions losses, occur at the outlet. For a headwall and no wing walls, the loss coefficient Ke is one (1.0). For a headwall with forty-five-degree (45°) wing walls, the loss coefficient is about one and fourteen hundredths (1.14). For a flared-end-section (which has a D2/D1 ratio of two (2) and a theta angle of around thirty degrees (30°)) the loss coefficient is approximately one- half (0.5).

4.1.10.4.3 Bend Losses

Bend Losses shall be calculated in accordance with FHWA Hydraulic Engineering Circular No. 22, Section 7.

4.1.10.4.4 Transition Losses

Transition Losses shall be calculated in accordance with FHWA Hydraulic Engineering Circular No. 22, Section 7.

4.1.10.4.5 Junction and Manhole Losses

Junction and Manhole Losses shall be calculated in accordance with FHWA Hydraulic Engineering Circular No. 22, Section 7.

A junction occurs where one (1) or more branch sewers enter a main sewer, usually at manholes. The hydraulic design of a junction is in effect the design of two (2) or more transitions, one (1) for each flow path. Allowances should be made for head loss due to the impact at junctions. The head loss at a junction for each pipe entering the junction can be calculated from:

$$H_{AH} = K_{AH} \times \frac{V_o^2}{2g} \qquad \text{(Equation 4.4)}$$

Where

V_o = the inlet velocity (feet per second)

K_{ah} = junction loss coefficient

Because of the difficulty in evaluating hydraulic losses at junctions (Reference 6) due to the many complex conditions involving pipe size, geometry of the junction and flow combinations, a simplified table of loss coefficients has been prepared. Table 4-3 (Federal Highway Administration, 2013) presents the recommended energy loss coefficients for typical manhole or junction conditions encountered in the urban storm sewer system.

Table 4-3: Head Loss Coefficients for Structures

Structure Configuration	Head Loss Coefficient (K_{AH})
Inlet - straight run, square edge	0.50
Inlet – angled through 90 degrees	1.50
Access Hole – straight run	Min to 1.50
Access Hole – angled through	
Θ = 90°	1.00
Θ = 120°	0.85
Θ = 135°	1.75

Table 4-3: Head Loss Coefficients for Structures

Structure Configuration	Head Loss Coefficient (K_{AH})
Θ = 157.5°	0.45
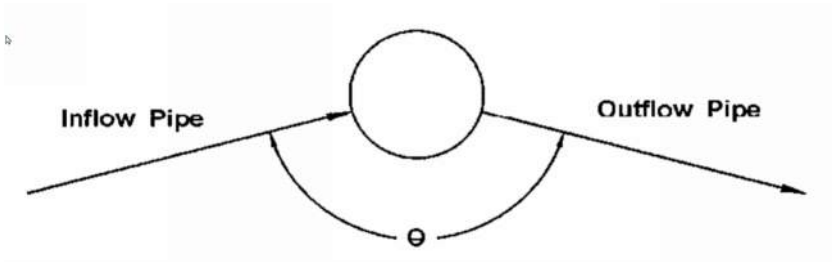	

4.2 Inlets

4.2.1 Inlet Locations

Inlets shall be provided at locations and intervals and shall have a minimum inflow capacity such that maximum flooding depths set below are not exceeded for the specified storm; at all sump locations where ponding of water is not desired and where drainage cannot be released at the ground surface.

4.2.2 Inlet Interception Capacities

Inlet capacities shall be determined in accordance with the Federal Highway Administration (FHWA) HEC-12 Manual (Federal Highway Administration, 2013).

The use of software utilizing the methods of HEC-12 is acceptable. The City allows the latest version of FHWA Hydraulic Toolbox (Federal Highway Administration, 2019). Other software shall be pre-approved for use by the City.

4.2.3 Clogging Factors

The inlet capacities determined as required in this Section must be reduced as follows, to account for partial blockage of the inlet with debris:

Table 4-4: Inlet Clogging Factors

Type if Inlet and Location	Clogging Factor
Type SS Curb Opening Inlets	
on grades	0.9
in sumps	0.8
Grated Inlets	
on grades	0.6
in sumps	0.5

Inlet lengths and/or grate areas shall be adjusted as required to account for clogging.

4.2.4 Interception and Bypass Flow

It is generally not practical for inlets on slopes to intercept 100% of the flow in gutters. Inlets must intercept sufficient flow to comply with street flooding depth requirements. Bypass flows shall be considered at each downstream inlet, until all flow has entered approved storm sewers or drainage ways.

4.2.5 Types of Inlets Allowed

4.2.5.1 Public Streets

4.2.5.1.1 Curb Opening Inlets

Type "SS" standard curb opening inlets as shown Drawing 140 shall be used for public streets with curb and gutter.

4.2.5.1.2 Grated Inlets

In general, the use of grated inlets in streets, which require adjustment when streets are repaved will not be permitted.

Where conditions are such that curb inlets cannot intercept the required rate of flow, necessary to control street flooding depth or to provide diversion of flow to detention, sedimentation, or infiltration basins, "trench inlets" with vaned grates may be specified with approval of the City.

Other types of inlets will not be permitted unless approved by the City.

4.2.5.2 Outside of Public Right-of-Way

The type of inlets specified outside of public right-of-way is left to the discretion of the designer provided the following criteria are met:

- Maximum flooding depths for the major or minor storm as set forth above are not exceeded.
- General safety requirements set forth below are met.
- All inlets shall be depressed a minimum of two (2) inches below the surrounding grade to allow proper drainage to the inlet and prevent inadvertent ponding in the area around the inlet.
- Inlets in pavements shall be provided with a concrete apron.

4.2.6 General Safety Requirements.

All inlet openings shall:

- Provide for the safety of the public from being swept into the storm drainage system; the maximum allowable opening shall not exceed six (6) inches in width.
- Be sufficiently small to prevent entry of debris which would clog the storm drainage system.

- Be sized and oriented to provide for safety of pedestrians, bicyclists, etc.

4.3 Pavement Drainage

Urban streets are a necessary part of the City drainage system. The design for the collection and conveyance of stormwater runoff is based on a reasonable frequency and degree of traffic interference. Depending on the street classification, (i.e., local, collector, primary and secondary arterial.) portions of the street may be inundated during storm events. Drainage of streets are controlled by both minor and major storm events. The minor system is provided to intercept and convey nuisance flow. Flow depths are limited for the major storm to provide access by emergency vehicles during most flood events. When the depths of flow exceed the criteria presented in this Section a storm sewer or open channel system is required.

4.3.1 General Design Requirements

Allowable flow depths: Flow in the street is permitted with allowable depths of flow as follows:

4.3.2 Local Streets

- 5-year Rainfall Event: Top of roadway crown, maximum
- 25-year Rainfall Event: Top of curb, maximum
- 100-year Rainfall Event: All flow shall be contained within the limits of the right-of-way.

4.3.3 Collector Streets

- 5-year Rainfall Event: The total maximum combined gutter spread on either side of the street shall allow a minimum 10-foot driving lane to remain open.
- 25-year Rainfall Event: Top of curb, maximum
- 100-year Rainfall Event: All flow contained within the limits of the right-of-way.

4.3.4 Arterials and Parkways

- 5-year Rainfall Event: The maximum gutter spread on either side of the street shall allow a minimum 10-foot driving lane to remain open in each direction. At total clear driving area of 20 feet shall be maintained.
- 25-year Rainfall Event: Top of curb, maximum
- 100-year Rainfall Event: All flow shall be contained within the limits of the right-of-way.

4.3.5 Cross Flow

Cross flow at intersections is permitted up to depths indicated in Table 4-5.

Table 4-5: Allowable Cross Flow Depths

Street Classification	Maximum Allowable Depth	
	5-year Storm	25-year Storm
Local	6 inches cross pan flow line	12 inches at gutter
Collector	No cross flow permitted	6 inches at gutter
Arterial or Parkway	No cross flow permitted	No cross flow permitted

4.3.6 Hydraulics

The allowable storm capacity of each street section with curb and gutter is calculated using the modified Manning's formula for both the 2-year and 25-year storm event.

$$\boldsymbol{Q = \frac{0.56}{n} \times S_x^{1.67} \times S_L^{0.5} \times T^{2.67}} \qquad \text{(Equation 4.5)}$$

Where

Q = discharge in cubic feet per second

S_x = cross slope of the street in feet per foot

S_L = longitudinal slope of the street in feet per foot

T = Width of flow (spread) in feet

n = Manning's roughness coefficient

SECTION 5 - CULVERTS

5.1 Structural Design

All culverts shall be designed to withstand an HS-20 loading in accordance with the design procedures of AASHTO "Standard Specifications for Highway Bridges". The designer shall also check the construction loads and utilize the most severe loading condition. The minimum allowable cover is one (1) foot.

5.2 Design Capacity

Culverts shall be designed to pass a 25-year storm with one (1) foot of freeboard prior to overtopping the road or driveway.

5.3 Headwater

The maximum headwater for the major storm design flow shall be one and one-half (1.5) times the culvert diameter for round culverts or one and one-half (1.5) times the culvert rise dimension for shapes other than round.

5.4 Inlet and Outlet Protection

For road and driveway culverts larger than fifteen (15) inches, culverts are to be designed with protection at the inlet and outlet areas as provided in this section. Headwalls or end sections are to be located a sufficient distance from the edge of the shoulder or the back of walk to allow for a maximum slope of 3H:1V to the back of the structure. The type of outlet protection required is as follows:

Table 5-1: Minimum Requirements for Inlet and Outlet Protection

Velocity < 7 ft/sec	7 ft/sec < Velocity < 15 ft/sec	Velocity > 15 ft/sec
Minimum Riprap protection	Riprap protection or Energy Dissipater	Energy dissipater

5.5 Velocity Limitations

The maximum allowable discharge velocity is fifteen (15) feet per second.

5.6 Culvert Hydraulics

It is recommended that the procedures outlined in the publication "Hydraulic Design of Highway Culverts" (reference 4) be used for the hydraulic design of culverts. Backwater calculations demonstrating the backwater effects of the culvert may be required.

SECTION 6 - BRIDGES

6.1 Structural Design

All bridges shall be designed to withstand an HS-20 loading in accordance with the design procedures of AASHTO "Standard Specifications for Highway Bridges" (reference 13). The designer shall also check the construction loads and utilize the most severe loading condition.

6.2 Design Capacity

Bridges shall be designed to pass the 50-year storm with one (1) foot of freeboard for design areas less than 20 square miles and two (2) feet freeboard for design areas greater than or equal to 20 square miles.

6.3 Backwater

"Backwater" is defined as the rise in the water surface due to the constriction created by the bridge approach road fills. The maximum backwater for the 100-year storm design flow shall be one (1) foot.

6.4 Velocity Limitations

Discharge velocities through bridge openings shall be limited to fifteen (15) feet per second. Abutment and channel scour protection shall be provided at all bridges.

6.5 Bridge Hydraulics

All bridge hydraulics shall be evaluated using the procedures presented in the publication "Hydraulics of Bridge Waterway" (reference 14). Backwater calculations demonstrating the effects of the bridge and approach fills compared to the existing flood stages shall be submitted for all bridges.

SECTION 7 - OPEN CHANNELS

7.1 General Design Guidelines

7.1.1 Natural Channels

The hydraulic properties of natural channels vary along the channel reach and can be either controlled to the extent desired or altered to meet the given requirements. Natural channels used as part of the drainage system must be evaluated for the effects of increased peak flow, flow duration and volume of runoff due to urbanization.

7.1.2 Grass Lined Channels

Grass lined channels are the most desirable of the artificial channels. The channel storage, lower velocities and the greenbelt multiple use benefits obtained create significant advantages over other artificial channels. Unless existing development restricts the availability of right of way, channels lined with grass should be given preference over other artificial types. The minimum slope in a grass-lined channel shall be one percent (1.0%) unless a concrete low flow channel is installed.

7.1.3 Concrete Lined Channels

Concrete lined channels are sometimes required where right of way restrictions within existing development prohibit grass-lined channels. The lining must be designed to withstand the various forces and actions, which tend to overtop the bank, deteriorate the lining, erode the soil beneath the lining and erode unlined areas. The minimum slope in a concrete lined channel shall be one-half percent (0.50%).

7.1.4 Rock Lined Channels

Rock lined channels are constructed from ordinary riprap or wire enclosed riprap (gabions etc.). The rock lining permits higher design velocity than for grass lined channels. Rock linings will normally be used only for erosion control at culvert/storm sewer outlets, at sharp channel bends, at channel confluences and at locally steepened channel sections.

7.1.5 Other Lining Types

The use of fabrics and other synthetic materials for channel linings has increased over the past several years. Proposed improvements of this type will be reviewed on an individual basis as for applicability and performance.

7.2 Hydraulics

An open channel is a conduit in which water flows with a free surface. The calculations for uniform and gradually varied flow are relatively straightforward and are based upon similar assumptions (e.g., parallel streamlines). The basic equations and computational procedures are presented in this Section.

7.2.1 Uniform Flow

Open channel flow is said to be uniform if the depth of flow is the same at every section of the channel. For a given channel geometry, roughness, discharge and slope, there is only one possible depth, the normal depth. For a channel of uniform cross section, the water surface will be parallel to the channel bottom for uniform flow.

The computation of normal depth for uniform flow shall be based upon Manning's formula as follows:

$$Q = \frac{1.486}{n} \times A \times R^{2/3} \times S^{1/2} \quad \text{(Equation 7.1)}$$

Where,

Q = Discharge in cubic feet per second (cfs)

n = Roughness coefficient (Table 4-2)

A = Cross sectional flow area (square feet)

R = Hydraulic radius (feet)

S = Slope of the energy grade line (EGL) (feet/foot)

For channels with a uniform cross section the EGL slope and the bottom slope are assumed to be the same.

7.2.2 Critical Flow

The design of earth or rock channels in the critical flow regime (Froude numbers from 0.9 to 1.2) is not permitted. The Froude number is defined as follows:

$$F_r = \frac{V\,T}{2gA} \quad \text{(Equation 7.2)}$$

Where

F = Froude number

V = Velocity in feet per second (feet/sec)

g = Acceleration of gravity (32.2 feet/sec^2)

A = Cross sectional flow area (square feet)

T = Top width of flow area (feet)

The Froude number shall be calculated for the design of all open channels.

7.2.3 Gradually Varied Flow

The most common occurrence of gradually varied flow in storm drainage is the backwater created by culverts, storm sewer inlets or channel constrictions. For these conditions the flow depth will be greater than normal depth in the channel and the water surface profile must be computed using backwater techniques.

Many computer programs are available for computation of backwater curves. The most widely used program is HEC-RAS, River Analysis System, developed by the U.S. Army Corps of

Engineers (Hydrologic Engineering Center, 2019) and is the program recommended for backwater profile computations.

7.3 Design Standards

7.3.1 Flow Velocity

Maximum flow velocities shall not exceed the following:

Table 7-1: Allowable Flow Velocity for Channels

Channel Lining Type	**Velocity** (feet/second)
Grass-lined	5
Concrete	15
Rock-line	10

7.3.2 Freeboard Requirements

- "Freeboard" is defined as the vertical distance between the computed water surface elevation for the design flow and the minimum top of bank elevation for a given cross section.
- For all channels one (1) foot minimum of freeboard is required.
- Freeboard shall be in addition to super elevation.

7.3.3 Curvature

The minimum channel centerline radius shall be three (3) times the top width of the design flow.

7.3.4 Super Elevation

Super elevation shall be calculated for all curves. An approximation of the super elevation h may be calculated from the following formula:

$$h = \frac{V^2 T}{gr} \qquad \text{(Equation 7.3)}$$

Where,

h = super elevation (feet)

V = Velocity in (feet / second)

T = Top width of flow area (feet)

g = Acceleration of gravity (32.2 ft/sec^2)

r = radius of curvature (feet)

Freeboard shall be measured above the super elevated water surface.

7.3.5 Grass Channels

7.3.5.1 Side Slopes

Side slopes shall be three (3) (horizontal) to one (1) (vertical) or flatter. Steeper slopes may be used subject to additional erosion protection and approval from the City.

7.3.5.2 Grade Checks

For design discharges greater than fifty (50) cfs, grade checks shall be provided at a maximum of two hundred (200) feet horizontal spacing.

7.3.5.3 Channel Drops

Channel drops shall be provided as necessary to control the design velocities within acceptable limits.

Vertical drops may be used up to three (3) feet in height. Drops greater than three (3) feet shall be baffled chutes or similar structures.

7.3.5.4 Manning Roughness

Table 7-2 provides allowable maximum and minimum Manning's roughness coefficients to use for channel design (City of Springfield, 2018).

Table 7-2: Typical Manning's Roughness Coefficients for Channels

Channel Lining	Minimum	Average	Maximum
Earthen	0.020	0.025	0.030
Mowed grass	0.025	0.030	0.035
Grass-not mowed	0.030	0.035	0.040
Grass with brush/trees	0.040	0.050	0.060
Cobble bottom, grass/root side	0.030	0.040	0.050
Concrete-smooth	0.012	0.013	0.015
Concrete-rough	0.015	0.017	0.020
Riprap D_{50} 6 inches	0.032	0.035	0.038
Riprap D_{50} 9 inches	0.035	0.038	0.040
Riprap D_{50} 12 inches	0.038	0.040	0.042
Riprap D_{50} 18 inches	0.040	0.042	0.044
Riprap D_{50} 24 inches	0.042	0.044	0.047
Grouted boulders	0.025	0.032	0.040

SECTION 8 - STORMWATER DETENTION

Detention facilities are used to reduce stormwater runoff rates by storing excess runoff. The usual function of a detention facilities is to provide sufficient storage such that peak runoff rates are not increased when development occurs.

8.1 Policies for Stormwater Detention

8.1.1 Goals and Objectives

The primary goal of the City of Republic stormwater management program is the prevention of flood damage to residential, commercial, and public property and to meet the requirements of the City's MS4 Permit. In adopting this policy, City of Republic recognizes that:

- There are many areas in the City where residential flooding occurs because of inadequately sized drainage ways.
- Flooding depths and frequency will increase as development occurs upstream of these areas.
- Detention basins are considered the most effective "on-site" means which can be used to control peak runoff stormwater rates as areas develop.
- Therefore, to provide a reasonable level of flood protection to homes and businesses, while maintaining a climate favorable for development and economic growth, the City of Republic has established the following policy for design of detention facilities.

In order to ensure protection of the general health and welfare of the citizens of the City of Republic, planning and design of stormwater management measures shall meet design criteria in this section.

8.1.2 Justified Exceptions

The City may consider, upon request, a waiver of detention for sites, in which the alteration of the site is inconsequential and will not substantially increase the runoff. A justified exception will be granted for sites based on the following criteria.

- Existing sites in which the addition of impervious surface will not increase more than five thousand (5,000) square feet.
- Sites in which existing gravel, chat or stone parking lots or driveways are paved with asphalt cement or concrete surfaces. This shall not apply to parking areas or circulation routes in which vegetation has consumed the site and altered the ability to shed or absorb runoff. The City shall exercise strict discretion with respect to approving exceptions based on these criteria.
- Sites in which a change in use has occurred, that do not increase the impervious area of the site.
- Subdivisions meeting the definition of a minor subdivision or the development of individual single-family-residential homes on individual lots in existing subdivisions.

- Sites that have designed the development with use of other forms of stormwater BMPs to meet water quality standards.

A request for approval of an alternative to detention must begin with the applicant providing the City with stormwater calculations and stormwater report for the increased runoff from the development. In addition to providing calculations, the applicant must submit a request for alternative design based on the criteria established above which will also be detailed in the stormwater report. If the City determines the request is justified, the City will notify the applicant or their representative of the approval.

8.1.3 Innovation in Design

It is the desire of the City that detention facilities be designed and constructed in a manner to enhance aesthetic and environmental quality of the City as much as possible. The City of Republic therefore encourages designs, which utilize and enhance natural settings and minimize disturbance and destruction of wooded areas, natural channels and wetlands.

8.2 Stormwater Management Criteria

All sites that are developed or redeveloped with a disturbance area greater than one acre and do not meet the requirements of paragraph “Justified Exceptions” shall be designed to incorporate features for stormwater management and control, in addition to water quality criteria in this manual. This includes projects of less than one acre that are part of a larger common plan of development or sale that would disturb one acre. The Engineer shall prepare detailed hydrologic and hydraulic analyses to show that the proposed changes to the site will not create adverse conditions to either the upstream or downstream areas of the watershed and shall meet water quality criteria.

8.3 Design Criteria

8.3.1 Discharge Locations

Detention facilities shall discharge into a drainage easement or public right-of-way. Discharge locations shall not disrupt or cause damage to downstream or upstream properties. The stormwater report and plans shall provide sufficient detail of discharge locations.

8.3.2 Freeboard

1 foot of freeboard shall be provided between the maximum water surface elevation (maximum stage for a one percent (1%) annual probability event) and the minimum top of berm or wall elevation.

8.3.3 Embankment Slopes

Embankment and cut slopes steeper than 3 horizontal to 1 vertical (3H:1V) are not permitted.

8.3.4 Emergency Overflow Spillway

The overflow spillways will be required on all detention facilities, which have storage volumes of one thousand (1,000) or more cubic feet.

The overflow opening or spillway shall be designed so that the combination flow of the low flow outlet and the flow over the spillway will not exceed the total peak runoff for the improved area. The total peak runoff is to be determined from a 25-year frequency rain for drainage areas less

than one (1.0) square mile and from a 100-year frequency rain for drainage areas one (1.0) square miles or greater.

As described in Section 8.4, an emergency overflow spillway may be analyzed for the one (1%) annual probability ("100-year"). If an emergency overflow spillway is needed for a facility, include a detailed summary of the overflow spillway, specifying the location, type, size and flow capacity in the Engineering Stormwater Report for Stormwater Flood Control and Water Quality specified in Section 8.5.3.

8.3.5 Special Release Rates

In certain instances, such as when the existing development conditions runoff from a watershed would exceed the capacity of the existing downstream facilities, retention basins (i.e., no outlet or with a release rate at the capacity of the downstream facilities) for the storm runoff may be required by the City.

8.3.6 Bottom Slope

Dry detention basins shall maintain a minimum bottom slope of 2 feet per hundred 100 feet (2%).

8.3.7 Trickle Channels

Detention basins may incorporate a trickle channel to concentrate and convey low flows through the basin. Trickle channels shall have a minimum slope of 0.5 foot per 100 feet (0.5%).

8.3.8 Detention in Parking Lots

8.3.8.1 Maximum Ponding Depth

The maximum allowable depth of ponding for parking lot detention is twelve (12) inches, however, the City shall reserve the right to disallow detention within a parking lot. Water quality may be compromised due to the presence of contaminants usually on parking lots and this should be taken into careful consideration when using and designing a parking lot as detention.

This design shall incorporate utilization of additional BMPs, such that water quality is met.

8.3.8.2 Percent of Total Area

Parking lot detention may not inundate more than ten percent (10%) of the total parking area.

8.3.8.3 Signage

All parking lot detention areas shall have a minimum of two (2) signs posted identifying the detention pond area. The signs shall have a minimum area of one and one-half (1.5) square feet and contain the following message:

WARNING

This area is a storm water detention pond and is subject to periodic flooding to a depth of twelve (12) inches.

The sign shall be reflective and have a minimum height of forty-eight (48) inches from the bottom of the sign to the parking space finished grade. Any suitable materials and geometry of the sign are permissible, subject to approval by the City.

8.4 Detailed Analysis

Detailed analysis shall be performed using hydrograph methodologies and reservoir routing techniques. The most common techniques are those developed by the Corps of Engineers and the Soil Conservation Service. These methods are preferred, however other proven techniques will be accepted.

Detention basins designed by detailed methods shall be designed based on multiple storm recurrence frequencies to ensure that they function properly for both frequent storms and large infrequent storms. A minimum of three (3) recurrence frequencies, the fifty percent (50%), ten percent (10%) and one percent (1%) annual probability storms (the "2-year, 10-year and 100-year" storms) must be considered.

The runoff model must include the entire drainage basin upstream of the proposed detention pond. The model shall be prepared in sufficient detail to ensure that peak runoff rates are reasonably accurate.

The runoff model shall be developed for the following cases described in Section 2 - .

Cases 1 and 2 are utilized to determine the required detention volume and the type of outlet structure to be provided and shall be analyzed for the three (3) storm recurrence frequencies required above.

The detention facility shall be designed such that peak outflow rates from the facility for Case 2 are no greater than the rates determined in Case 1 for each of the three (3) storm recurrence frequencies required.

(The storage volume provided shall not be less than the difference in total runoff volume between Case 1 and Case 2.)

Case 3 is used to determine the size of the overflow spillway. Case 3 needs only be analyzed for the one percent (1%) annual probability ("100-year").

8.5 Submittals

The following information must be submitted:

8.5.1 Analytical Methods

Information regarding analytical methods and software to be used, including:

1. Name of software to be used.
2. Type and distribution of precipitation input.
3. Method for determining precipitation losses.
4. Type of synthetic hydrograph.

5. Method for routing hydrographs.

6. Method used for reservoir routing.

8.5.2 Mapping

Map(s) showing sub-basin delineation, topography, presumed flow routes and pertinent points of interest; soil types; existing basin development conditions used in the model; fully developed conditions used in the model.

Routing diagram for the runoff model.

A summary of sub-basin characteristics used for program input.

Stage-area or stage-storage characteristics for the basin in tabular or graphic form.

Stage-discharge characteristics for the outlet structure and overflow spillway in tabular or graphic form; hydraulic data for weirs, orifices and other components of the control structure.

A printout of the input data file.

A summary printout of program output, including plots of hydrographs. (These are intended to be the printer plots generated by the software.)

8.5.3 Engineering Stormwater Report for Stormwater Flood Control and Water Quality

A supplemental stormwater report, stamped by a registered Professional Engineer licensed in the state of Missouri, that includes detailed drainage design computations, in addition to items stated in Section 8.5.1 and Section 8.5.2, must be submitted with stormwater construction plans. The stormwater report must include all details of the stormwater system including detention and water quality calculations and any other relevant hydraulic calculations required to ensure that the proposed stormwater system is designed in accordance with all City regulations. Stormwater calculations for predevelopment and post development conditions must be submitted for the 1, 10 and 100-year storm events to show that post development runoff peaks will not exceed predevelopment runoff peaks. All details of the routing procedure must be submitted with the report. At a minimum, stormwater reports should include the following sections.

8.5.3.1 Project Description and Background

Provide the development name, address and location along with any other relevant information to identify the specific location of the project site. State the type of development (i.e., Commercial Development, Residential Development, etc.), the overall size of the development, and if there are any plans for future development. Identify any and all concentrated offsite stormwater runoff crossing the development and, if so, how the offsite runoff will be conveyed through the site. Provide information on State if site contains a sinkhole or is located in a sinkhole watershed. If so, provide a Sinkhole Evaluation Report in accordance with Section 9 of this manual. State if the development is located in the FEMA floodway or 1% annual floodplain and provide name of the receiving water body. A floodplain development permit will be required to satisfy all regulatory requirements, not limited to the United States Army Corps of Engineers.

8.5.3.2 Detention Summary

Specify the impervious improvements proposed for the development and determine necessary stormwater improvements in order to meet the City's stormwater control and quality regulations.

8.5.3.2.1 Existing Detention

If an existing stormwater detention facility was previously constructed to serve a development provide necessary calculations and analysis to show that the proposed development is in conformance with the original design criteria of the existing detention facility and that existing detention can accommodate new development. Runoff from the proposed development must drain directly to the existing detention facility or drain through drainage easements and/or street right of way to the detention facility. If runoff from the proposed development exceeds the existing detention facility design criteria, additional detention must be provided in accordance with current stormwater regulations.

8.5.3.2.2 Proposed Stormwater Detention Improvements

If there is a determination through design calculations that constructing a stormwater detention facility is required as regulated by this manual, provide a description of the facility (i.e., dry, wet) along with the facility location and the maximum amount of impervious surfacing the facility is designed to handle. State the design method used to size the detention facility specified in Section 3 and provide a summary of the proposed stormwater detention facility.

In the event that an overflow spillway is required based on the regulations specified in this manual, provide a description of the spillway including location, type, size and flow capacity.

8.5.3.2.3 Water Quality Summary

Provide a description of how the proposed developments mitigate stormwater events and specify how the proposed developments will maintain stormwater quality compliance with requirements specified in Section 8.7.

8.6 Control Structures

Detention facilities designed by the simplified analysis shall be provided with obvious and effective outlet control structures. These outlet structures may include v-notch weirs or rectangular weirs, as well as pipe. Plan view and sections of the structure with adequate detail shall be included in the plans.

The design discharge (Q) for the low-flow outlet shall not exceed the existing runoff for the one-year storm. The maximum discharge shall be designed to take place under total anticipated design-head conditions. The design-head storage volume is not to be considered a part of the volume of detention required.

Sizing of a low-flow pipe shall be by inlet control.

Low-flow pipes shall not be smaller than four (4) inches in diameter to minimize maintenance and operating problems, except in parking lot and roof detention where minimum size and configuration of opening shall be designed specifically for each condition.

8.7 Detailed Submittal Plans and Drawings

At a minimum, the development shall include all stormwater related plans designed to meet items specified in the stormwater report. Submittals shall include the following:

- Overall Site Grading Plan
    - This may include phased development, in which, portions of a site will be developed prior to other areas.
    - The plans shall include all existing and proposed contours for the development.
- Erosion Control Protection Plan
- Stormwater Improvement Plans (Existing and Newly Proposed for the Development)
    - Stormwater Inlets, Drainage
    - Related stormwater structure elevations and profiles
    - Outfall Structures, overflow emergency spillways
    - Miscellaneous details for all stormwater related infrastructure
- Stormwater Pollution Prevention Plan

8.8 Water Quality Requirements

8.8.1 Purpose

This section provides requirements and standards to protect the health, safety, and welfare of the public through stormwater management that reduces the harmful effects of urban runoff on area waterways and enhances the livability of the community. The overall objective of this section focuses on the following:

- Maintain compliance with federal and state requirements under the National Pollutant Discharge Elimination System (NPDES) Municipal Separate Storm Sewer System (MS4) program. The City is regulated under this program through its MS4 permit, which mandates the City to have requirements in place to reduce the discharge of pollutants from the MS4 to the Maximum Extent Practicable (MEP) by addressing the post-construction water quality impacts of stormwater runoff from new development and redevelopment.
- Provide a basis for developing on-site design criteria which will effectively protect water quality with various treatment processes and runoff.
- Site planning and design principles incorporating Stormwater Control Measures (SCMs) and Best Management Practices (BMPs) to minimize disturbance and impervious surfaces and preserve and protect vegetation, soils, natural topography, natural channels, and karst features.

In developing this chapter, the following design manuals from other communities were referenced and adapted based on related local conditions and experiences. Designers are encouraged to

consider approaches, guidelines and recommendations provided in these references in conjunction with this section.

- Greene County Missouri Design Standards for Water Quality Control Protection
- City of Springfield. (2018, April). Flood Control and Water Quality Protection Manual. Springfield, Missouri: Department of Public Works.

Outfalls specifically mentioned under the City's MS4 permit authorizes discharges to areas tributary to Dry Br., tributary to Pond Creek, and tributary to Terrell Cr. It is the responsibility of the City to maintain compliance with federal and state requirements under the National Pollutant Discharge Elimination System (NPDES) Municipal Separate Storm Sewer System (MS4) program and as result, specify the requirements and recommendations provided herein.

8.8.2 General Design Guidelines for Water Quality

Design guidelines that aid in effective stormwater quality considers the following:

8.8.2.1 In-depth Research of Proposed Site for Development

Getting to know the proposed site prior to development planning should be the first step in considering flood control and water quality. Studying the topography of a site in order to most effectively utilize natural land features in the conveyance and filtration of stormwater is a key step in developing storms.

8.8.2.2 Minimize the amount of runoff:

The amount of runoff from a development is directly related to the amount of impervious areas utilized for the conveyance of stormwater. A system utilizing impervious areas, i.e., paved drainage, curb and gutters, storm drains, in a connected system to mitigate stormwater flow greatly increases the amount of runoff and, therefore, reductions in impervious should be considered in the initial design of a development. A reduction in directly connected runoff can help decrease the likelihood of pollutants being transported to receiving waters.

8.8.2.3 Maximizing contact with vegetation.

Incorporating the use of vegetation in the conveyance of storm water through vegetative filter strips, grass swales and infiltration through soils can greatly reduce the amount of pollutants and sediments. The idea of utilizing disconnected systems is likely to reduce the runoff peak and volume if designed effectively.

8.8.2.4 Maximizing holding and settling times.

The most effective SCMs reduce both the runoff peak and volume. By reducing the rate of outflow and increasing the time of detention storage, settling of pollutants and infiltration of runoff are maximized.

8.8.2.5 Utilizing SCMs/BMPs in series where possible.

The utilization of a combination of SCMs in series can help reduce the amount of pollutants entering receiving waters. For example, conveying stormwater through first a vegetative filter strip, then to grass swales, and then to detention/ infiltration basins would help reduce the level of pollutants.

8.8.2.6 Incorporating both flood control and water quality objectives in designs.

Incorporating both flood control and water quality criteria into a single stormwater management facility is not only possible but is encouraged. Whenever practical, combining several objectives, such as water quality enhancement and flood control, maximizes the cost-effectiveness of stormwater management facilities.

8.8.3 Design Criteria

8.8.3.1 Requirements

The following requirements will apply to new developments within the City as authorized by the MS4 permit:

1. Stormwater runoff from any new development for which the total impervious area exceeds ten percent (10%) of the total land area of the development must be directed through an extended wet or dry detention basin, or other properly designed BMP, prior to discharge from the site.

2. Runoff from fueling areas and other areas having a high concentration of pollutants, such as parking lots, will be required to be directed to a sand filter or other properly designed BMP which provides filtration as well as settling.

3. The required volume for capture and treatment shall be designed as the water quality capture volume (WQCV) and shall be determined as set forth in Section 8.8.3.2.

4. Detention storage must be provided to limit the peak flow rate as set forth in Section 8.4.

8.8.3.2 Water Quality Capture Volume

Water quality BMPs shall be designed to capture the runoff from the 90th percentile rainfall for Greene County as well as to capture the first flush of pollutants from directly connected impervious areas within the proposed development. Since stormwater controls are designed for small, frequent storm events, therefore, the water quality volume (WQV) is based on the runoff from a 1-inch rainfall. The WQV must be captured using SCMs, that reduce the discharge of pollutant through runoff reduction and treatment.

The required water quality capture volume (WQCV) to be used in design of extended wet and dry detention basins and other BMPs whose design is based upon capture and treatment of stormwater, shall be the greater of the following:

1. the first one-half inch (½") of runoff from the directly connected impervious area (DCIA) in the development, or

2. the runoff resulting from total rainfall depth of one-inch (1") in twenty-four (24) hours over the entire development.

SECTION 9 - SINKHOLES AND KARST FEATURES

9.1 General

- The City of Republic is located on the Springfield Plateau of the Ozarks physiographic region. This area is underlain by Mississippian Age limestone, which is highly susceptible to solutional weathering. As a result, sinkholes, springs and caves are common.

- In many areas of the City special consideration must be given to flood hazards and potential for groundwater contamination due to the presence of sinkholes, caves, losing streams, springs and other features associated with karst geology.

- The requirements set forth herein are intended to provide specific criteria for design and construction for any site upon which sinkholes or other karst features are located.

- Interpretations of these requirements shall be made, and appeals may be made according to the procedures set forth in these Design Criteria.

9.2 Policy

In keeping with the intent of the City Development Regulations the following policy is set forth for development in areas containing sinkholes:

- Development in sinkhole areas will be based upon the following axioms:
    - Avoidance.
    - Minimization.
    - Mitigation.

Construction in sinkholes shall be avoided. Exceptions will be made only in situations where it can be conclusively demonstrated that there are no practical alternatives to such construction.

- These situations are mostly likely to arise where:
    - An underground cavity has caused a collapsed sinkhole to form, after subdivision approval or building construction.
    - A sinkhole has been altered or filled either unknowingly or prior to passage of these regulations.
    - Maintenance and operation are required for existing roads and utilities.
    - Location of existing streets or utilities would render access or utility service to a property impractical or cost prohibitive.

- In these types of cases, measures which will have minimal impact on the sinkhole or receiving water, may be proposed. Plans for minimal alteration can be approved provided it is conclusively demonstrated that the proposed plan is the minimum practical alternative.

- In these cases, potential impacts of construction on the sinkhole and receiving waters must be studied and assessed and recommendations made for mitigation of potential impacts upon surface flooding and groundwater quality before the plans can be approved. The degree and sophistication of study required will increase in proportion to the potential impacts. A remediation plan will need to be submitted for review by the City. The remediation plan will need to be stamped by a registered Professional Geotechnical Engineer licensed in the state of Missouri.

9.3 Definitions

As used in this Section, the following terms shall have these prescribed meanings:

ALTERED SINKHOLE — A sinkhole that has been filled, excavated or otherwise disturbed.

COLLAPSED SINKHOLE — A subsidence or cave-in of the ground surface caused when soil overburden can no longer be supported by underlying strata due to the presence of subsurface solution cavities.

HEAVY EQUIPMENT — Motorized equipment having a gross weight of more than six (6) tons.

LIGHT EQUIPMENT — Motorized equipment weighing six (6) tons or less.

QUALIFIED GEOLOGIST — A person who has met or exceeded the minimum geological educational requirement and who can interpret and apply geologic data principles and concepts and who can conduct field or laboratory geologic investigations (per RSMo.) and who by reason of experience and education, has an understanding of local karst geology.

QUALIFIED PROFESSIONAL GEOTECHNICAL ENGINEER — A person registered to practice engineering according to the laws of the State of Missouri and who by reason of technical education and experience has a background in the fundamentals of storm drainage and karst geology.

SINKHOLE — Any depression in the surface of the ground, with or without collapse of adjacent rock that provides a means through which surface water can come into contact with subsurface water.

Sinkhole depressions may be gradual or abrupt; they may or may not have a well-defined eye. While most sinkholes can be defined as the area within a "closed contour", some sinkholes such as those located on the sides of hills may not.

All sinkholes provide discreet points of recharge to groundwater.

SINKHOLE CLUSTER AREA — An area containing two (2) or more sinkholes located in proximity, generally interconnected by groundwater conduits.

SINKHOLE EYE — Generally, a visible opening, cavity or cave in the bottom of a sinkhole, sometimes referred to as a swallow hole.

SINKHOLE FLOODING AREA — The area inundated by runoff from a storm with an annual exceedance probability of one percent (1%) and a duration of twenty-four (24) hours.

SINKHOLE RIM — The perimeter of the sinkhole depression. The sinkhole rim will generally vary in elevation.

SINKHOLE WATERSHED — The ground surface area that provides drainage to the sinkhole. This area extends beyond the sinkhole depression and generally crosses property boundaries.

TERMINAL SINKHOLE — The lowest sinkhole in a sinkhole cluster to which any surface water overflowing from other sinkholes in the cluster will flow.

UNALTERED SINKHOLE — A sinkhole that has never been altered or disturbed.

9.4 Permits Required

9.4.1 Grading Permit

A grading permit must be obtained prior to any alteration of sinkholes associated with new subdivision construction in accordance with the City's Subdivision Regulations. Procedures and requirements for grading permits are set forth in Section 10.3.

9.4.2 Other Permits

Other permits from State or Federal agencies may be required, as outlined in Section 10.4 of these Design Criteria, depending upon the size and nature of the proposed activity.

9.5 General Plan Requirements

General requirements for grading and drainage plans are set forth in Section 8.7.

9.6 Sinkhole Evaluation

An evaluation including the following information shall be made for all sites upon which sinkholes are fully or partially located:

9.6.1 Site Plan

The site plan for the proposed development must show the following items with respect to location of proposed construction, proposed or existing property lines and existing structures:

9.6.1.1 Sinkholes

- Location and limits of the area of the sinkhole depression as determined by field surveys or other reliable sources as may be approved.
- Location of sinkholes based solely upon USGS 7-1/2 Minute Series Quadrangle Maps will not be considered sufficient unless field verified.
- Location and elevation of the sinkhole eye where visible or known.
- Topographic contours at maximum intervals of two (2) feet and spot elevations sufficient to determine the low point on the sinkhole rim and the profile of the potential overflow area.
- Minimum entry elevations of any existing structures located within the sinkhole rim.
- Elevation of any roadway located within or adjacent to the sinkhole.

9.6.1.2 Water Supply Sources

- The approximate location of public or private water supply sources such as springs or wells, as determined from information available from the City and Missouri Department of Natural Resources.

- Boundaries of any known recharge areas to wells or springs as determined from information available from the City and Missouri Department of Natural Resources.

9.6.1.3 Other Geologic Features

Location of caves, springs, faults and fracture trends, geologic mapping units based upon information from the City or other reliable sources.

9.6.1.4 Flooding Limits

Flooding limits for the sinkholes are determined as set below.

9.6.2 Drainage Area Map

A drainage area map showing the sinkhole watershed area. Where the site is in a sinkhole cluster area, this map shall be extended to include the watershed area any sinkholes located downstream of the site which may receive overflow drainage from the site.

9.6.3 Assessment of Impacts

Assessment of potential impacts on groundwater quality and proposed water quality management measures as set forth below.

9.7 Flooding Considerations

9.7.1 Minimum Flooding Analysis

- Maximum estimated flooding elevations shall be determined for each sinkhole for both pre-development and post development conditions, assuming no subsurface outflow from the sinkhole.

- Where the estimated volume of runoff exceeds the volume of the sinkhole depression, the depth, spread and path of overflow shall be estimated and shown on the map.

- The overflow volume shall be included determining the maximum estimated flooding elevations in the next downstream sinkhole. This analysis shall continue downstream until the lowest sinkhole of the sinkhole cluster is reached, or overflow reaches a surface watercourse.

- The volume of runoff considered shall be that which results from a rainstorm with an annual probability of one percent (1%) (100-year storm) and a duration of twenty-four (24) hours (eight and two-tenths (8.2) inches for Republic).

- The runoff volume shall be determined by the method set forth in Chapter 2 of the SCS TR-55 Manual (Reference).

- No further flooding analysis will be required provided that:

- The post-development flooding area of any sinkhole which receives drainage from the site is located entirely on the site.

- A drainage easement covering the post-development flooding area is provided for any off-site sinkhole or portion of a sinkhole which receives increased peak rates of runoff from the site. If the receiving sinkhole is not contiguous to the site, an easement must also be provided for the waterway that connects the site to the sinkhole.

- The minimum entry elevation of any existing structure is at least one (1) foot higher than the estimated flooding elevation from the one percent (1%) annual probability 24-hour storm.

- The flooding depth on any existing public road does not exceed the maximum depth set forth in Section 4.3 of this Manual.

9.7.2 Detailed Flooding Analysis

9.7.2.1 General Requirements

In cases where the conditions set forth above cannot be met, a detailed flooding analysis will be required if any increase in runoff volume is proposed. For detailed flooding analysis a runoff model must be made for the sinkhole watershed and reservoir routing analysis performed using hydrograph techniques as set forth in Section 3.4.

9.7.2.2 Alternative Methods

The following alternative methods may be used singly or in combination to keep flooding levels at predevelopment levels:

9.7.2.2.1 Diversion of Excess Runoff to Surface Watercourses

Where feasible, increased post-development runoff may be diverted to a surface watercourse, provided that:

- Any increase in peak runoff rate in the receiving watercourse does not create or worsen existing flooding problems downstream; and

- The diverted stormwater remains in the same surface watershed.

- Storm sewers, open channels and other appurtenances provided for diversions shall be designed in accordance with applicable sections of these Design Criteria.

- The effect of diverted water on downstream watercourses and developments and requirements for additional detention facilities prior to release of runoff to the surface watercourse shall be determined as set forth in Section 8.

- Effects of the diversion shall be shown by reservoir routing analysis. Routing of excess runoff shall be considered satisfactory when it can be demonstrated that the post-development flooding elevation in the sinkhole does not exceed the pre-development flooding elevation within reasonable tolerance (generally one-tenth (0.1) foot).

9.7.2.3 Storage of Excess Runoff within the Sinkhole Watershed

- Where feasible, detention facilities may be constructed within the sinkhole watershed or in perimeter areas of the sinkhole. However, this does not mean that detention will be permitted within the sinkhole depression. These detention facilities must be located outside the sinkhole flooding area determined for post- development conditions.

- The flooding considerations set forth in this Section will be met if it can be demonstrated that:

    - Inflow rates to the sinkhole can be reduced to a degree that, in conjunction with the observed outflow rate, the post-development flooding elevation in the sinkhole does not exceed the pre-development flooding elevation within reasonable tolerance (generally one-tenth (0.1) foot).

    - Sediment and erosion control and water quality considerations as set forth elsewhere in this Section can be satisfied.

9.8 Water Quality Considerations.

9.8.1 Requirements

Sinkholes provide direct recharge routes to groundwater. As a result, water quality in wells, caves and springs may be affected by discharge of runoff from developed areas. The Sinkhole Evaluation must consider potential impacts of the proposed construction on receiving groundwater and propose measures to mitigate such impacts. Four (4) primary factors must be considered:

- Receiving groundwater use.

- Relative groundwater contamination hazard associated with the proposed development.

- Ability to capture pollutants.

- Management measures to be provided to reduce pollutant levels.

9.8.2 Receiving Groundwater Use

The Sinkhole Evaluation Report shall identify whether the site lies within a critical area based upon information available from the City.

9.8.2.1 Dye Tracing

Where disagreements may arise over whether a site is located within a recharge area dye tracing may be required for confirmation of the destination of water discharges through a sinkhole.

9.8.2.2 Critical Areas

The following areas are classified as critically sensitive to contamination from urban runoff:

- Recharge areas of domestic water supply wells.

- Recharge areas of springs used for public or private water supply.

- Recharge areas of caves providing habitat to rare or endangered species such as the Ozark cave fish.

9.8.2.3 Sensitive Areas

All other sinkhole areas will be classified as sensitive to contamination from urban runoff.

9.8.3 Groundwater Contamination Hazard

The relative potential for groundwater contamination will be classified as low, moderate or high depending upon the type of land use, development density and amount of directly connected impervious area. The Sinkhole Evaluation shall identify whether the proposed development poses a low, moderate or high hazard to groundwater uses, as defined below:

9.8.3.1 Low hazard

The following land uses are classified as posing a relatively low hazard to groundwater contamination:

- Wooded areas and lawns.
- Parks and recreation areas.
- Residential developments on sewer, provided directly connected impervious areas discharging to the sinkhole is less than one (1) acre.
- Low density commercial and office developments provided directly connected impervious areas discharging to the sinkhole is less than one (1) acre.
- Discharge from graded areas less than one (1) acre having required sediment controls per Section 10.

9.8.3.2 Moderate Hazard

- Concentrated discharge from streets and parking lots and roofs and other directly connected impervious areas having an area greater than one (1) acre and less than five (5) acres.
- Multi-family residential developments and higher intensity office developments provided the directly connected impervious areas discharging to the sinkhole is less than five (5) acres.
- Discharge from graded areas greater than one (1) acre and less than five (5) acres having required sediment controls per Section 8.

9.8.3.3 High hazard.

- Collector and arterial streets and highways used for commercial transport of toxic materials.
- Railroads.

- Concentrated discharge from streets and parking lots and roofs and other directly connected impervious areas having an area greater than five (5) acres.
- Commercial, industrial and manufacturing areas.
- Individual wastewater treatment systems.
- Commercial feedlots or poultry operations.
- Discharge from graded areas greater than five (5) acres having required sediment controls per Section 8.

9.8.4 Capturing and Filtering Pollutants

- Most sinkholes drain a limited watershed area. For sinkholes where the surrounding drainage area is small enough that the area draining to the sinkhole flows predominantly as "sheet flow", potential impacts on water quality can be addressed by erecting silt control barriers around the sinkhole during construction and providing a vegetative buffer area around the sinkhole to filter out potential contaminants.
- When the volume of runoff into the sinkhole increases to the point where flow becomes concentrated, the degree of effort required to capture and filter out contaminants increases significantly.
- Concentrated inflow occurs naturally when the sinkhole watershed area reaches a sufficient size for watercourses leading into the sinkhole to form. Concentrated surface flows result as urbanization occurs due to construction of roads, storm sewers, drainage channels. Subsurface flows can become concentrated through utility trenches.
- The Sinkhole Evaluation shall include maps showing any existing watercourse which flows into the sinkhole and the location of any proposed concentrated stormwater discharges into the sinkhole.

9.8.5 Water Quality Management Measures

9.8.5.1 Sediment and Erosion Control.

9.8.5.1.1 Non-Concentrated Flow (Sheet Flow)

In critical areas, existing ground cover shall not be removed within thirty (30) feet of the sinkhole rim and a silt barrier shall be provided around the outer perimeter of the buffer area.

9.8.5.1.2 Concentrated flow

A sediment basin will be required at each point where concentrated flows are discharged into the sinkhole.

Sediment basins shall be designed according to the procedures set forth in Section 10.5.2.4.

9.8.5.2 Minimizing directly connected impervious areas.

- The groundwater contamination hazard category for impervious areas may be reduced by reducing the amount of Directly Connected Impervious Area. This is the area of roofs,

drives, streets, parking lots, etc. which are connected via paved gutters, channels or storm sewers.

- Directly Connected Impervious Areas can be reduced by providing properly sized grass swales, vegetative filter strips or other Best Management Practices to separate paved areas.

9.8.5.3 Diversion of Runoff

- Concentrated discharges to sinkholes can be reduced to manageable levels or avoided by diverting runoff from impervious areas away from sinkholes where possible.

- Diversions shall be done in a manner that does not increase flooding hazards on downstream properties and, generally, shall not be directed out of the surface watershed in which the sinkhole is located.

9.8.5.4 Filtration Areas

- For areas having a low or moderate groundwater contamination hazard and where flow into the sinkhole occurs as sheet flow, water quality requirements can be satisfied by maintaining a permanent vegetative buffer area with a minimum width of thirty (30) feet around the sinkhole.

- Use of pesticides and fertilizers will not be permitted within the buffer area. Animal waste will not be permitted to accumulate in the buffer area.

9.8.5.5 Grassed Swales and Channels

- For areas having a low groundwater contamination hazard concentrated flows from directly connected impervious areas of less than one (1) acre may be discharged into the sinkhole through grassed swales and channels.

- Swales and channels shall be designed for non-erosive velocities and appropriate temporary erosion control measures such as sodding, or erosion control blankets provided.

9.8.5.6 Storage and Infiltration

Storage and infiltration will be required in the following cases:

- All areas having a high groundwater contamination hazard.

- Areas having a moderate groundwater contamination hazard where concentrated inflow occurs.

Storage and infiltration basins shall be designed to capture the runoff from storms up to one (1) inch and release runoff over a minimum period of twenty-four (24) hours and maximum period of forty-eight (48) hours.

Standards outlet structures for sedimentation and infiltration basins are shown in the standard drawings.

9.9 Development Requirements.

9.9.1 Stormwater Detention in Sinkholes.

Where flooding considerations and water quality considerations, as set forth in Section 10, can be met, the volume of runoff storage in sinkholes can be counted toward stormwater detention requirements, provided that proper sediment and erosion control measures are provided as set forth in Section 10.

The volume of required detention storage shall be determined as set forth in Section 8.

Excavation within the sinkhole flooding area to provide additional detention storage will not be allowed.

9.9.2 Modification of Sinkholes to Increase Outflow Rates.

Increasing outflow rates in sinkholes by excavating the sinkhole eye or installing disposal wells for diverting surface runoff to the groundwater system is prohibited, unless clear and imminent danger to the public health and safety can be demonstrated.

9.9.3 Setbacks and Use Restrictions

- No new construction of any of the following shall be permitted within thirty (30) feet of the sinkhole rim:
    - Residential, commercial or industrial structures.
    - Swimming pools.
    - Streets, highways or parking lots.
    - Storage yards for materials, vehicles and equipment.
    - Sanitary sewer lines.
- Use of pesticides and fertilizers within thirty (30) feet of the sinkhole rim is prohibited.
- Use of heavy construction equipment in unaltered sinkholes is prohibited.
- Construction of underground utilities is prohibited within the sinkhole rim.
- Recreational facilities such as hiking, jogging and bicycling trails, playgrounds, exercise courses and grass playing fields are permitted within the sinkhole area provided they are not located within the eye of the sinkhole.
- Golf courses are permitted subject to approval of a Management Plan for use of pesticides and fertilizers.
- Clearing and pruning of trees and undergrowth and limited grubbing of roots is permitted.
- Landscaping and minor gardening is permitted outside of the sinkhole eye provided erosion and sediment discharge is limited through use of minimum tillage and mulches.

- Construction of light incidental landscaping and recreational structures such as gazebos, playground equipment, etc. is permitted except in the sinkhole eye.

9.9.4 Collapsed Sinkholes

- Collapsed sinkholes may be stabilized and filled using approved techniques. A Grading Permit and a Geotechnical report and/ or mediation report all limitations in development must be issued prior to performing any construction.

- The probable cause of the collapse and potential adverse impacts of filling the collapse shall be investigated and information submitted with the Grading Permit application.

9.9.5 Altered Sinkholes

- Filling or altering of sinkholes without a Grading Permit and a Geotechnical report and/ or mediation report all limitations in development constitutes a violation of these regulations. In such cases corrective measures must be proposed within the time period specified in the Zoning Regulations for enforcement of such violations. No corrective or remedial measures shall be undertaken until the proposed remediation plan has been reviewed by the City and a Grading Permit issued.

- No Building Permits will be issued, or zoning or subdivision approvals granted, until the remedial measures specified in the Grading Permit have been completed and approved.

SECTION 10 - GRADING, SEDIMENT AND EROSION CONTROL

10.1 Goals and Objectives

The goal of the regulation is to effectively minimize erosion and discharge of sediment by application of relatively simple and cost-effective Best Management Practices. This goal can be attained by meeting the following objectives:

- Minimize the area disturbed by construction at any given time.
- Stabilize disturbed areas as soon as possible by re-establishing sod, other forms of landscaping and completing proposed structures, pavements and storm drainage systems.
- Provide for containment of sediment until areas are stabilized.
- Provide permanent erosion controls.

10.2 General Design Guidelines

The following items shall be considered in preparing a sediment and erosion control plan:

10.2.1 Temporary Versus Permanent Controls

The greatest potential for soil erosion occurs during construction. Temporary controls are those that are provided for the purpose of controlling erosion and containing sediment until construction is complete.

Temporary controls include straw or hay bale dikes, silt fences, erosion control blankets etc., which are not needed after the area is stabilized.

Permanent controls consist of riprap, concrete trickle channels, detention basins, etc., which will remain in place through the life of the development.

It is possible for the same facility to serve both a temporary and permanent purpose. The difference between temporary and permanent erosion control should be clearly recognized in preparing a sediment and erosion control plan.

10.2.2 Sheet Flow Versus Concentrated Flow

In areas where runoff occurs primarily as sheet flow, containment of sediment is relatively simple. In these areas straw or hay bales, silt fences and vegetative filter areas can be very effective.

Where concentrations of flow occur containment of sediment becomes more difficult as the rate and volume of flow increase. In these areas more sophisticated controls such as sedimentation basins must be provided.

10.2.3 Slope

Control of erosion becomes progressively more difficult as the slope of the ground increases. Areas with steeply sloping topography and cut and fill slopes must be given special consideration.

10.2.4 Soils and Geologic Setting

Area soils and the geologic setting must be considered in preparing the plan and any special considerations deemed necessary for a particular site provided.

10.2.5 Environmentally Sensitive Areas

Where construction occurs within the vicinity of permanent streams, springs, sinkholes, lakes or wetlands, special attention must be given to preventing discharge of sediment. These areas will require frequent inspections to ensure that proper mitigation measures are being implemented to hinder any water quality requirements.

10.3 Grading Permits

10.3.1 Permit Requirements

Grading permits are required for all construction sites with the following exceptions:

- Grading for single-family or duplex residences constructed in subdivisions where approved sediment and erosion controls have been constructed.
- Emergency construction required repairing or replacing roads, utilities or other items affecting the general safety and wellbeing of the public.
- For emergency construction sites which would otherwise be required to obtain a permit and for which remedial construction will take more than fourteen (14) calendar days, application for the permit must be made within three (3) calendar days from the start of construction.
- The following activities, provided that they are not located within thirty (30) feet of a spring, sinkhole, wetland or watercourse:
    - Gardening or landscaping normally associated with single- family residences that cover less than one-half (½) acre.
    - Grading and repair of existing roads or driveways.
    - Cleaning and routine maintenance of roadside ditches or utilities.
    - Utility construction where the actual trench width is two (2) feet or less.

10.3.2 Permit Procedure

The following items must be received prior to issuance of a Grading Permit:

- An approved grading, sediment and erosion control plan. The submittal and approval procedure are as follows for subdivisions, commercial and other sites.
- The sediment and erosion control plan shall be submitted for review along with the plans for the proposed improvements.
- Receipt of MDNR Land Disturbance Permit

- Grading permits for commercial, multi-family or major subdivisions will be issued by the City after the project plans have been approved.

10.3.3 Plan Requirements

Plans must be prepared by and bear the seal of an engineer registered to practice in the State of Missouri. Plan requirements are set forth in Section 8.7. Plans will not be required in the following cases:

- Grading associated solely with a single-family residence and have been accounted for in a larger development/subdivision.

- Grading or filling of less than one (1) acre if located outside of the allowable building areas and not located within twenty- five (25) feet of spring, sinkhole, wetland or watercourse. In these instances, a grading permit can be issued, providing an inspection of the site by a representative of the City does not reveal conditions that would warrant preparation of a detailed plan.

10.4 Other Permits

10.4.1 NPDES Stormwater Permit

NPDES stormwater permit. Effective October 1, 1992, construction sites where the area to be disturbed is five (5) acres or more must apply for a stormwater discharge permit from the Missouri Department of Natural Resources. Effective December 8, 1999, construction sites where the area to be disturbed is one acre or more or less than one acre but part of a common plan of development require a stormwater discharge permit from the Missouri Department of Natural Resources. Permit requirements are set forth in 10 CSR 20-6.200 of the Missouri Clean Water Laws.

10.4.2 Missouri Land Disturbance Permit

Effective December 8, 1999, construction sites where the area to be disturbed is one acre or more or less than one acre but part of a common plan of development will require a Missouri Land Disturbance permit.

10.4.3 USACE Section 404 Permit and State issued 401

"404" permit. Grading activities in streams or wetlands may require a Department of the Army Permit under Section 404 of the Clean Water Act. When a proposed development/project will take place near or in streams or wetlands, a permit or memo from the Army Corps of Engineers specifically stating, “a permit will not be required,” is required to provide to the City. If the Army Corps of Engineers determines a 404 permit is required, the project must also be submitted to the state of Missouri for a Section 401 Water Quality Certification.

10.5 Design Standards and Criteria.

10.5.1 Grading

10.5.1.1 Maximum Grades

Cut or fill slopes shall not exceed four (4) to one (1).

10.5.1.2 Maximum Height

Cut or fill slopes shall not exceed fifteen (15) feet in vertical height unless a horizontal bench area at least five (5) feet in width is provided for each fifteen (15) feet in vertical height.

10.5.1.3 Minimum Slope

Slope in grassed areas shall not be less than one percent (1%).

10.5.1.4 Construction Specifications

Construction of streets must comply with specifications set forth by the City of Republic. For all other areas, construction specifications stating requirements for stripping, materials, subgrade compaction, placement of fills, moisture and density control, preparation and maintenance of subgrade must be included or referenced on the plans or accompanying specifications submitted.

10.5.1.5 Spoil Areas

- Broken concrete, asphalt and other spoil materials may not be buried in fills within proposed building or pavement areas.
- Outside of proposed building and pavement areas, broken concrete or stone may be buried in fills, provided it is covered by a minimum of two (2) feet of earth.
- Burying of other materials in fills is prohibited.

10.5.1.6 Stockpile Areas

Location of proposed stockpile areas shall be outlined in the plans and specifications for proper drainage included.

10.5.1.7 Borrow Areas

The proposed limits of temporary borrow areas shall be outlined in the plans and a proposed operating plan described on the grading plan. Temporary slopes in borrow areas may exceed the maximums set forth above. At the time that borrow operations are completed, the area shall be graded in accordance with the criteria set forth above and reseeded.

10.5.2 Sediment Containment

10.5.2.1 Existing Vegetative Filter Area

Existing vegetative filter areas may be used where:

- Unconcentrated sheet flow occurs.
- An area of existing vegetation a minimum of twenty-five.
- (25) feet in width can be maintained between the area to be graded and a property line, watercourse, sinkhole, spring, wetland or classified lake.
- Existing ground slope is no greater than five (5) to one (1) (twenty percent (20%)).
- The existing vegetative growth is of sufficient density and in sufficiently good condition to provide for filtration of sediment.

- Vegetative filter areas are a temporary and permanent practice.

10.5.2.2 Hay/Straw Bale Dike or Silt Fence

Containment areas constructed of hay or straw bales, or silt fence may be provided in areas where:

- Unconcentrated sheet flow occurs,
- An area of existing vegetation a minimum of twenty-five (25) feet in width cannot be maintained between the area to be graded and a property line, watercourse, sinkhole, spring, wetland or classified lake,
- Existing ground slope is no greater than five (5) to one (1) (twenty percent (20%)),
- Concentrated flow from an area no greater than one (1) acre occurs and a minimum volume of one thousand (1,000) cubic feet per acre is contained behind the dike. Either cereal grain straw or hay may be used for bale dikes. Straw/hay bale dikes shall be constructed as shown in Drawing 50. Straw/hale bale dikes and silt fences are temporary practices.

10.5.2.3 Temporary containment berms.

Temporary containment berms may be provided for areas where concentrated flow from areas greater than one (1) acre and less than five (5) acres occurs. Temporary containment berms must contain a volume of one thousand (1,000) cubic feet per acre of drainage area.

- Temporary containment berms shall have a riprap outlet with a sediment filter as shown in Drawing 40 or a perforated pipe outlet as shown in Drawing 80.
- Details for temporary containment berms are shown in Drawing 30.
- Temporary containment berms and accumulated sediment may be completely removed after the tributary area is stabilized and must be removed prior to final acceptance and release of escrow.

10.5.2.4 Sedimentation Basin

10.5.2.4.1 General

Sediment basins shall be provided for all areas where concentrated flow occurs from an area of 10 or more acres disturbed at one time.

- Sediment basins shall be sized and designed, at a minimum, to treat local 2 year, 24-hour storm.
- Sediment basins shall not be constructed in any waters of the state or natural buffer zones.

Runoff shall be calculated in accordance with Section 3.

10.5.2.4.2 Sediment Basin Outfall Structures

Sediment basins shall be provided with an outflow structure consisting of:

- A flow restriction device which provides for the required detention time,
- An outfall pipe sized to carry the maximum estimated outflow rate,
- Protective structures at the pipe outlet to prevent crushing or damage of the end of the pipe,
- Protective structures to prevent blockage of the pipe with debris,
- Erosion protection at the pipe outlet. A typical outlet structure is shown in Drawing 140.

A sedimentation basin is required for each drainage area with ten or more acres disturbed at one time.

(a) The sedimentation basin shall be sized, at a minimum, to treat a local 2-year, 24-hour storm.

(b) Sediment basins shall not be constructed in any waters of the state or natural buffer zones.

(c) Discharges from dewatering activities shall be managed by appropriate controls. The SWPPP shall include a description of any anticipated dewatering methods and specific BMPs designed to treat dewatering water.

Any basin used for dewatering shall be inspected daily when discharge is occurring. The discharge shall be observed and dewatering activities shall be ceased immediately if the receiving stream is being impacted. These inspections shall be noted on a log or on the inspection report.

Outfalls examined for visual signs of erosion or sedimentation at outfalls. Excessive erosion or sedimentation may be due to BMP failure or insufficiency. Response to observations should be addressed in the inspection report.

10.5.2.4.3 Overflow Spillway

- An overflow spillway capable of discharging the peak flow rate for the four percent (4%) annual probability (25-year) storm while maintaining a minimum freeboard of one (1) foot.
- Overflow spillways may be sodded where the depth of flow at the crest is limited to no greater than six (6) inches and outlet channel velocities do not exceed five (5) feet per second for the minor (5-year) storm.
- Overflow spillways not meeting these restrictions must be constructed of riprap, concrete or other approved, non- erodible material.

10.5.3 Erosion Protection

10.5.3.1 Seeding and Mulching

10.5.3.1.1 Permanent Seeding

- Permanent seeding fertilizer and mulch shall be applied at the rates set forth in Drawing 10 or according to other specifications, which are approved with the Grading Permit.

- The City prefers that permanent seeding be performed between September first (1st) and October thirtieth (30), if possible.

- If permanent seeding cannot take place within the time frame stated above, the City's next preferred time frame would be between March first (1st) and June fifteenth (15th), with March or April being the next preferable option.

10.5.3.1.2 Mulching

Where slopes are less than four (4) to one (1), cereal grain mulch is required at the rate of one hundred (100) pounds per one thousand (1,000) square feet (four thousand five hundred (4,500) pounds per acre). Cereal grain mulch shall meet the requirements of Section 802 of the State Specifications (Reference 17) for Type 1 mulch.

Where slopes are four (4) to one (1) or greater Type 3 mulch ("hydro mulch") meeting the requirements of Section 802 of the State Specifications (Reference 17) shall be used.

10.5.3.1.3 Temporary seeding

Whenever grading operations are suspended for more than thirty (30) calendar days between permanent grass or seeding periods, all disturbed areas must be reseeded with temporary cover according to Drawing 10.

Temporary seeding season runs from May fifteenth (15th) to November fifteenth (15th).

10.5.3.1.4 Overseeding

During the winter season (November fifteenth (15th) to March first (1st)) temporary seed and mulch shall be placed in on all completed areas or areas where grading is suspended for more than thirty (30) calendar days. During this period seed, mulch and soil amendments shall be applied at the following rates:

Lime: 100% of specified quantity[1].

Fertilizer: 75% of specified quantity.

Seed: 50% of specified quantity.

Mulch: 100% of specified quantity.

Areas seeded during this period shall be reseeded and mulched during the next permanent seeding season according to seeding requirements.

10.5.3.1.5 Maintenance

Seeded areas must be maintained for one (1) year following permanent seeding.

10.5.3.2 Cut and Fill Slopes.

Cut and fill slopes shall be protected from erosion by construction of straw bale dikes, silt fences, diversion berms or swales along the top of the slope.

[1] Per Drawing 10

- Where drainage must be carried down the slopes, pipe drains, concrete flumes, riprap chutes or other impervious areas must be provided. Suitable erosion control measures such as riprap stilling basins, must be provided at the bottom of the slope.

- Diversions shall be maintained until permanent growth is firmly established on the slopes.

- Typical diversion details are shown in Drawing 30. Riprap chute details are shown in Drawing 70.

10.5.3.3 Channels and Swales

Permanent channels and swales shall be provided with a stabilized invert consisting of one of the following materials:

10.5.3.3.1 Sod

Where the average velocity of flow is five (5) feet per second or less and there is no base flow, the channel shall be lined with sod.

- For channels with a bottom width less than fifteen (15) feet, sod shall extend up the side slope to a minimum height of six (6) inches above the toe. (Drawing 90).

- Channels with a bottom width of fifteen (15) feet or greater, shall be graded as shown in Drawing 90 and a low flow area, fifteen (15) feet in width lined with sod.

- The remainder of the channel slopes shall be seeded and mulched as provided above.

10.5.3.3.2 Erosion Control Blanket

Commercial erosion control blankets may be used in lieu of sod provided that samples are submitted and approved by the City. The guaranteed maintenance period shall be one (1) year.

10.5.3.3.3 Channel Linings

In grass channels where base flow occurs, a non-erosive low-flow channel of riprap or concrete may be provided. Low flow channels shall have a minimum capacity of five (5) cubic feet per second. Other suitable non-erosive materials may be specified with approval of the City.

For channels which have an average velocity of five (5) feet per second or greater a non-erosive lining of riprap concrete or other approved material must be provided.

10.5.3.4 Storm Sewer and Culvert Outlets

Erosion protection shall be provided at storm sewer and culvert outlets. Minimum erosion protection shall consist of a concrete toe wall and non-erosive lining, meeting the City's specifications for public improvements.

- The required length of non-erosive lining will not be decreased where flared end sections or headwalls are provided unless calculations and data to support the decrease in length are submitted and approved.

- Non-erosive lining shall consist of riprap, unless otherwise specified and approved. Field stone, gabions or riprap shall extend to the point at which average channel velocity for the

peak flow rate from the minor (5-year) storm has decreased to five (5) feet per second maximum.

- The length of riprap to be provided shall be as follows: (See Drawing 120)

  Average outlet velocity less than five (5) feet per second:

  L = three (3) times the pipe diameter or culvert width.

  Average outlet velocity less than five (5) to ten (10) feet per second:

  L = length determined using Drawing 120.

  Average outlet velocity greater than ten (10) feet per second:

  - Use MHTD standard energy dissipater headwall. (Reference 17)
  - The height of erosion protection shall be as shown in Drawing 120.
  - Minimum toe wall dimensions are shown in Drawing 120. Where headwalls or flared end sections are specified, toe walls must be provided at the downstream end.

10.5.3.5 Curb Openings

Where drainage has been approved by the City to flow from paved areas to grass areas through curb openings erosion protection shall be provided as shown in Drawing 130.

10.5.3.6 Ditch Checks and Drop Structures

In grass channels, grades and velocities may be controlled by ditch checks and drop structures. Riprap ditch checks may be required in natural channels where average velocity for the peak flow rate from the 5-year storm exceeds five (5) feet per second for post- development conditions.

10.5.3.7 Spillways

Erosion protection must be provided at spillways and outlet structures for detention ponds. Erosion protection shall extend to the point where flow has stabilized and average velocity in the outlet channel is five (5) feet per second or less.

10.5.4 Temporary Construction Entrance.

- A minimum of one (1) temporary construction entrance is required at each site. Additional temporary entrance may be provided if approved. The location of each construction entrance shall be shown on the plan.

- Only construction entrances designated on the sediment and erosion control plan may be used. Barricades shall be maintained, if necessary, to prevent access at other points until construction is complete.

- Construction entrances shall be constructed of crushed limestone meeting the following specifications:

- Construction entrances shall be a minimum of twenty-five (25) feet wide and fifty (50) feet long.

- The minimum thickness of crushed limestone surface shall be six (6) inches. Additional two (2) inch lifts of crushed limestone shall be added at the discretion of the County if the surface of the initial drive deteriorates or becomes too muddy to be effective.

- In locations where an existing drive or street extends at least fifty (50) feet into the site, the existing drive may be designated as the construction entrance and construction of a new gravel entrance is not required, unless job conditions warrant as set forth in the preceding paragraph.

10.5.5 Cleaning Streets

Streets both interior and adjacent to the site shall be kept clean during construction and for 1-year post-construction prior to release of security. Streets shall be swept and cleaned as necessary, after rain events, and as directed by the City.

10.5.6 Dust Control

The contractor will be required to use water trucks to water all roads and construction areas to minimize dust leaving the site when conditions warrant as determined by the City.

10.5.7 Sequencing and Scheduling

Costs of sediment and erosion control can be minimized if proper consideration is given to sequencing and scheduling construction. Any special sequencing and scheduling considerations should be noted in the grading plan. A detailed schedule must be received from the contractor at the Pre- Construction Conference

SECTION 11 - WORKS CITED

City of Springfield. (2018, April). Flood Control and Water Quality Protection Manual. Springfield, Missouri: Department of Public Works.

Federal Highway Administration. (2013, August). Urban Drainage Design Manual. Hydraulic Engineering Circular No. 22, Third. Washington, D.C. Retrieved from https://w`ww.fhwa.dot.gov/engineering/hydraulics/pubs/10009/10009.pdf

Federal Highway Administration. (2019, December 4). FHWA Hydraulic Toolbox. Retrieved from FHWA Bridges and Structures: https://www.fhwa.dot.gov/engineering/hydraulics/software/toolbox404.cfm

Greene County, (1999, April). Section 115 - Water Quality Protection. Retreived from Greene County Design Standards: https://greenecountymo.gov/files/files.php?id=1561

Huff, F. A., & Angel, J. R. (1992). Rainfall Frequency Atlas of the Midwest. Illinois State Water Survey. Champaign, Illinios: Midwest Climate Center. Retrieved from https://www.isws.illinois.edu/pubdoc/B/ISWSB-71.pdf

Hydrologic Engineering Center. (2019, March). Hydrologic Engineer Center's River Analysis System (HEC-RAS). Davis, California: U.S. Army Corps of Engineers. Retrieved from https://www.hec.usace.army.mil/software/hec-ras/

Missouri Department of Natural Resources. (2013, December 10). Minimum Design Standards for Missouri Community Water Systems. Jefferson City. Retrieved from https://dnr.mo.gov/pubs/pub2489.pdf

Natural Resources Conservation Service. (1986, June). Urban Hydrology for Small Watersheds. Washington, D.C.: U.S. Department of Agriculture. Retrieved from https://www.nrcs.usda.gov/Internet/FSE_DOCUMENTS/stelprdb1044171.pdf

Natural Resources Conservation Service. (2019, February 21). Web Soil Survey. (U.S. Department of Agriculture) Retrieved March 2019, from https://websoilsurvey.sc.egov.usda.gov/App/HomePage.htm

State of Missouri Department of Natural Resources, (2021, October 13). *Missouri State Operating Permit* (MOR04C021).

DRAWING 10

SEED AND MULCH SPECIFICATIONS

SEEDING RATES	**BROADCAST**	**DRILLED SODDED**
Tall Fescue	30lbs/ac.	25lbs/ac. solid
Kentucky Bluegrass	3lbs/ac.	2lbs/ac. solid
Red Fescue	10lbs/ac.	7lbs/ac.
Wheat or Rye	120lbs/ac.	100lbs/ac.
Annual Ryegrass	100lbs/ac.	100lbs/ac.

SEEDING DATES:

PERENNIAL GRASSES: March 1 to May 15 or August 15 to October 15.

TEMPORARY COVER: May 15 to November 15.

OVERSEEDING: November 15 to March 1.

MULCH RATES:

Wheat Straw 100 lbs per 1,000 square feet (4,500 lbs/ac).

FERTILIZER RATES:

Nitrogen	90lbs/ac.
Phosphate	90lbs/ac.
Potassium	90lbs/ac.
Lime	1500lbs/ac. ENM*

* ENM – effective neutralizing material as per State evaluation of quarried rock.

DRAWING 30

DIVERSION DIKE AND SWALE

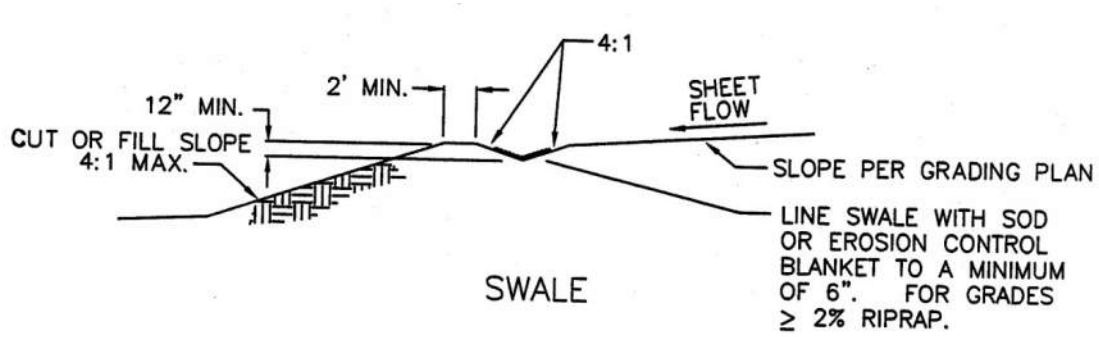

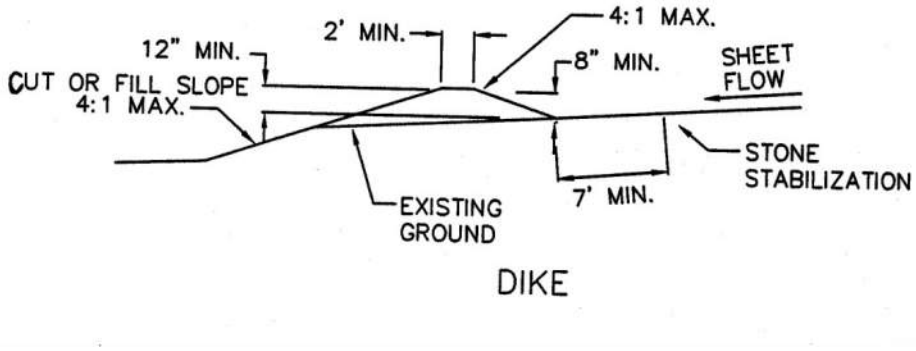

NOTES:

1. DIKE SHALL BE COMPACTED TO DENSITY EQUAL TO THAT SPECIFIED FOR ADJOINING AREA (90% STANDARD PROCTOR DENSITY, MINIMUM).

2. MINIMUM 1% GRADE MUST BE PROVIDED FOR SWALE OR ALONG UP SLOPE SIDE OF DIKE FOR PROPER DRAINAGE.

REFERENCE: ADAPTED FROM CITY OF AUSTIN AND CITY OF TULSA EROSION AND SEDIMENTATION CONTROL MANUALS.

DRAWING 40

RIPRAP OUTLET SEDIMENT FILTER

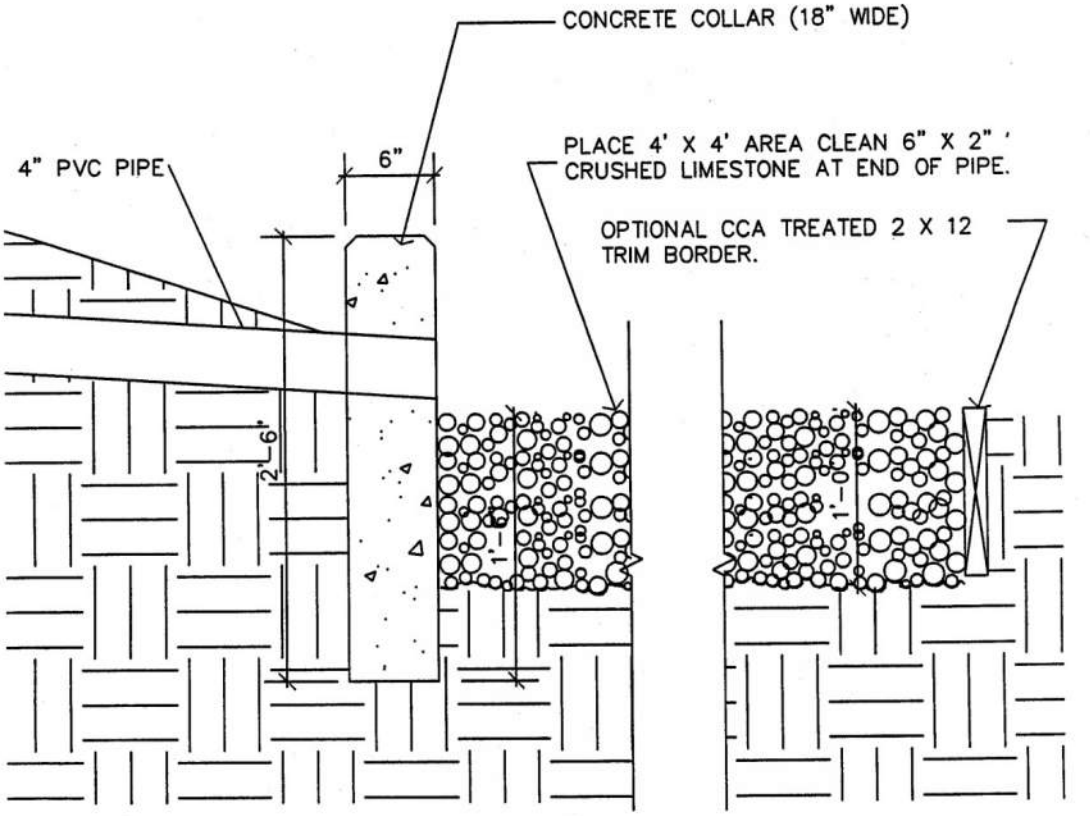

DRAWING 50

STRAW BALE DIKE

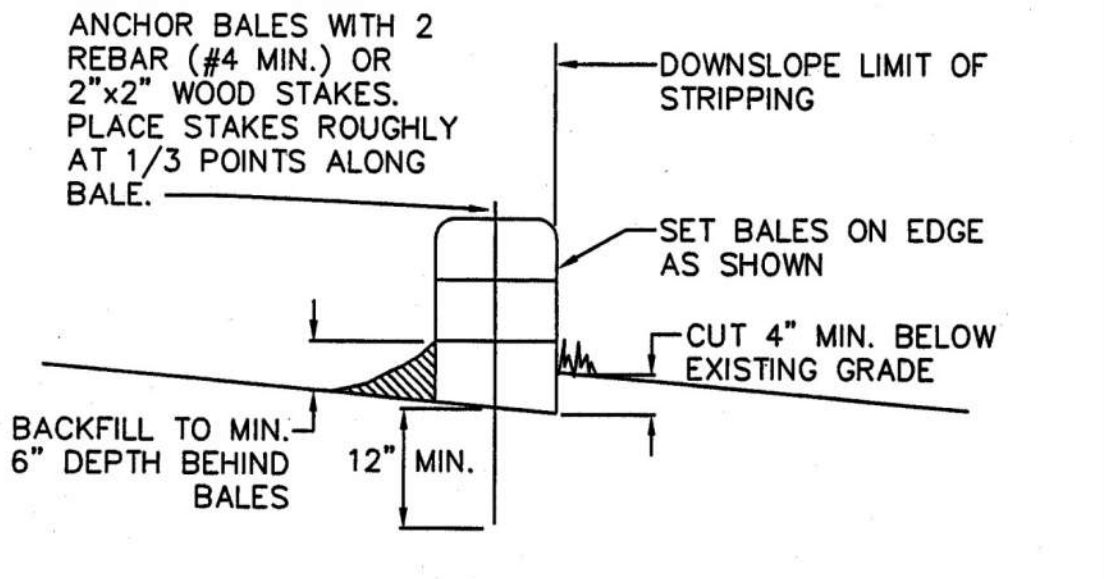

NOTES:

1. BALES SHALL BE PLACED IN A ROW WITH ENDS TIGHTLY ABUTTING THE ADJACENT BALES.
2. EACH BALE SHALL BE EMBEDDED IN THE SOIL A MINIMUM OF FOUR (4) INCHES WHERE POSSIBLE.
3. BALES SHALL BE SECURELY ANCHORED IN PLACE BY STAKES OR RE-BARS DRIVEN THROUGH THE BALES. THE FIRST STAKE IN EACH BALE SHALL BE ANGLED TOWARD PREVIOUSLY LAID BALE TO FORCE BALES TOGETHER.
4. INSPECTION SHALL BE FREQUENT AND REPAIR OR REPLACEMENT SHALL BE MADE PROMPTLY AS NEEDED BY CONTRACTOR.
5. BALES SHALL BE REMOVED WHEN THEY HAVE SERVED THEIR USEFULNESS SO AS NOT TO BLOCK OR IMPEDE STORM FLOW OR DRAINAGE.
6. ACCUMULATED SILT SHALL BE REMOVED WHEN IT REACHES A DEPTH OF SIX (6) INCHES.
7. AT EACH END OF DIKE, TURN DIKE UPSLOPE AND EXTEND UNTIL GROUND SURFACE RISES EIGHTEEN (18) INCHES.

REFERENCE: ADAPTED FROM CITY OF AUSTIN AND CITY OF TULSA EROSION AND SEDIMENTATION CONTROL MANUALS.

DRAWING 70

RIPRAP CHUTE

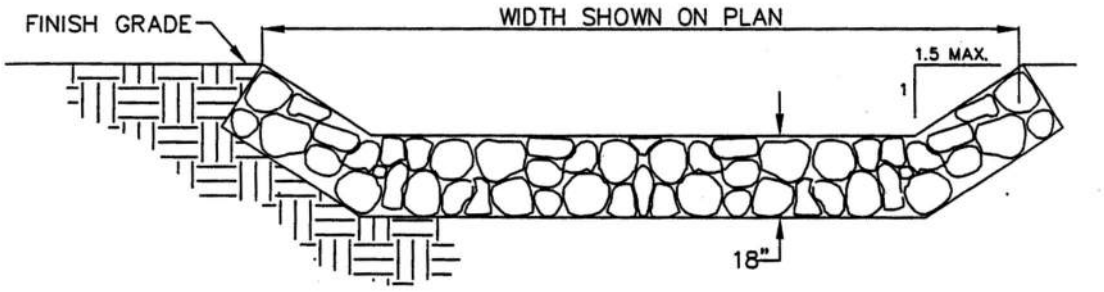

RIPRAP STONE SHALL BE GRADED AS FOLLOWS:

WEIGHT OF STONE (LBS.)	APPROXIMATE SIZE (LEAST DIMENSION)	% SMALLER BY WEIGHT
300	15.0"	100
200	13.0"	60--90
100	10.5"	30--50
50	8.5"	10--20
10	6.0"	<5

DRAWING 80

SEDIMENT BASIN--PERFORATED PIPE OUTLET

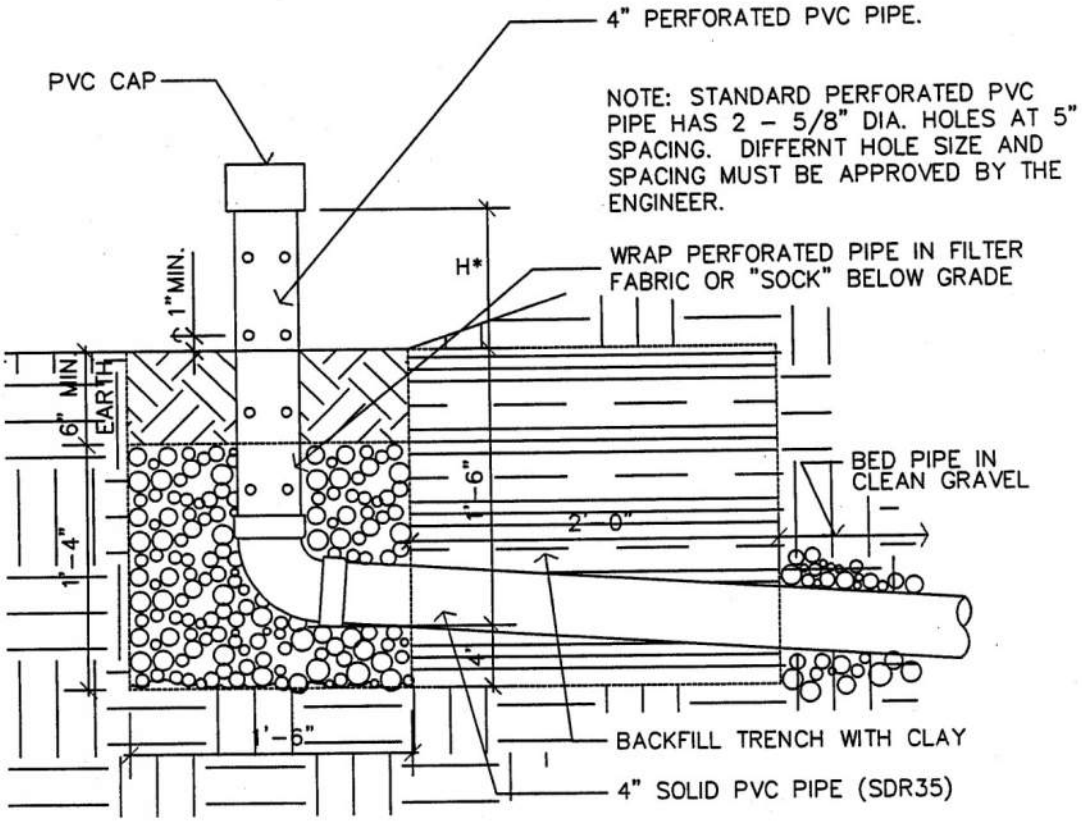

NOTE: PERFORATED RISER HEIGHT, H, TO BE SPECIFIED.

DRAWING 90

SOD CHANNEL <15' AND >15'

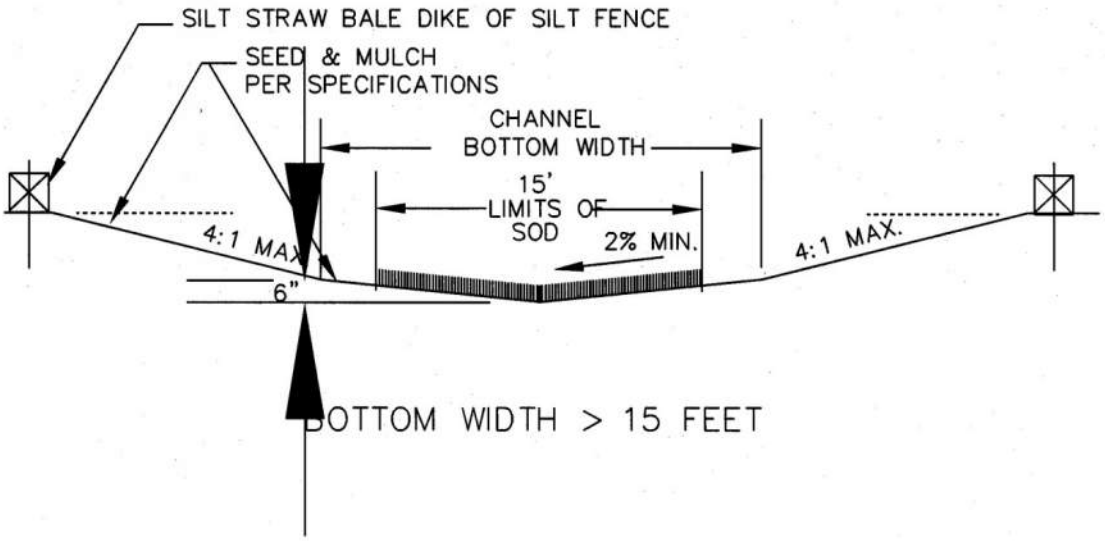

BOTTOM WIDTH > 15 FEET

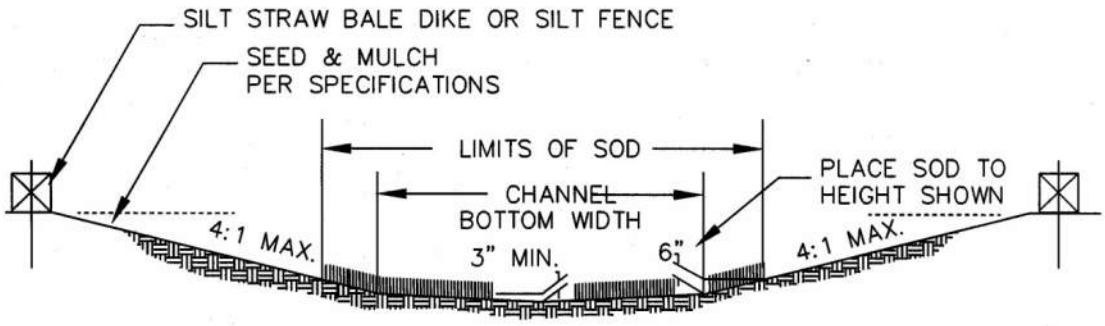

BOTTOM WIDTH < 15 FEET

DRAWING 120

OUTLET EROSION PROTECTION CULVERT AND STORM SEWER OUTLETS

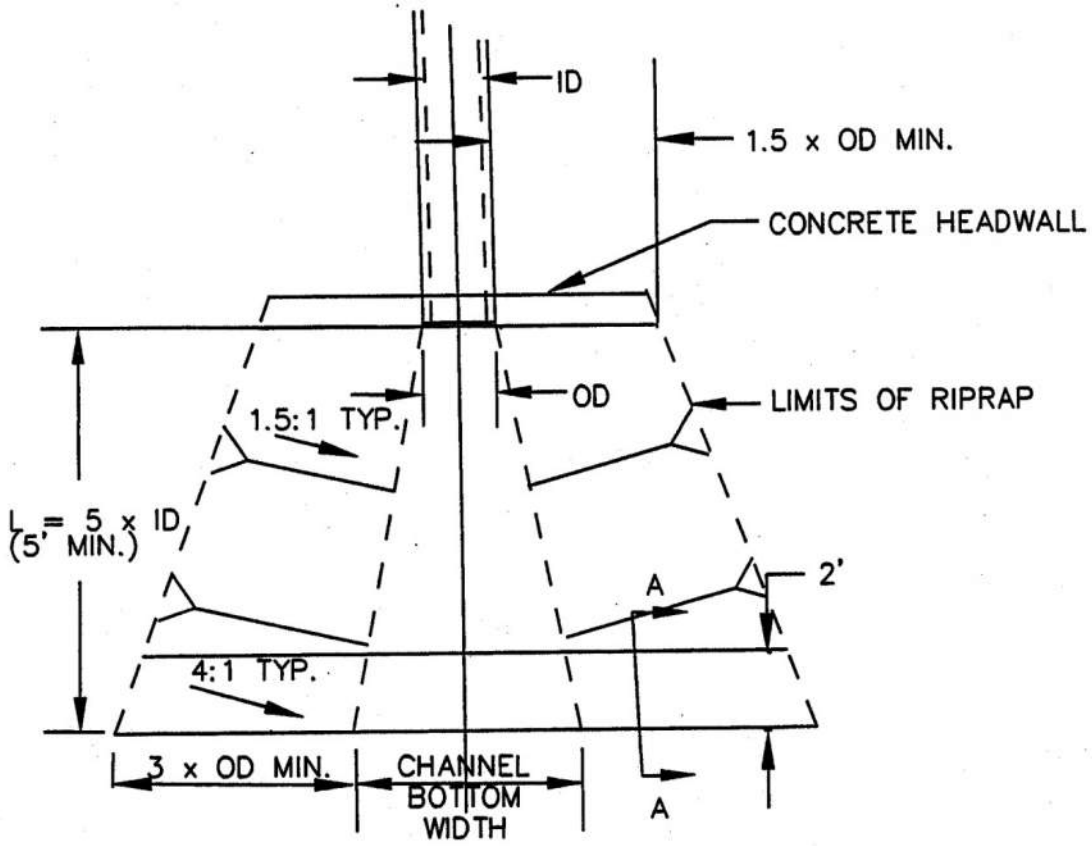

PIPE I.D. (inches)	L (feet)
12	5.0
15	6.5
18	7.5
24	10.0
30	12.5
36	15.0
42	17.5
48	20.0
54	22.5
60	25.0

SECTION A-A
TOE WALL

DRAWING 130

CURB OPENING

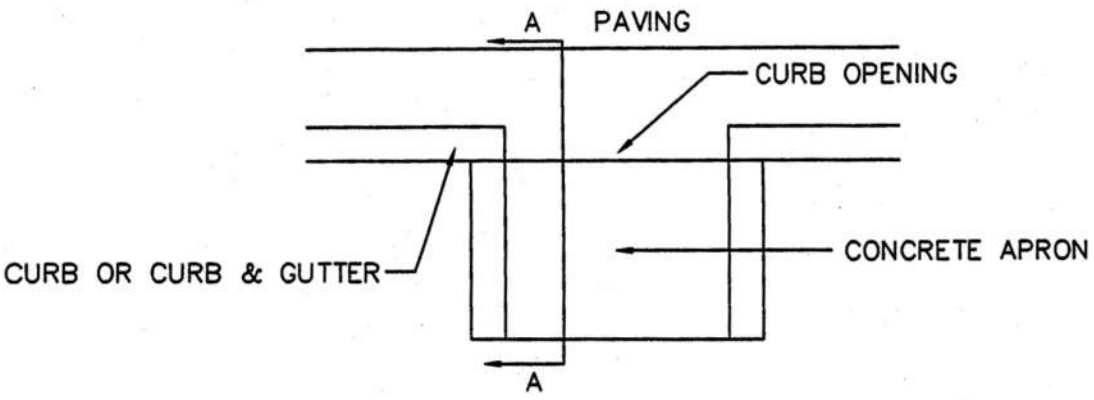

PLAN VIEW

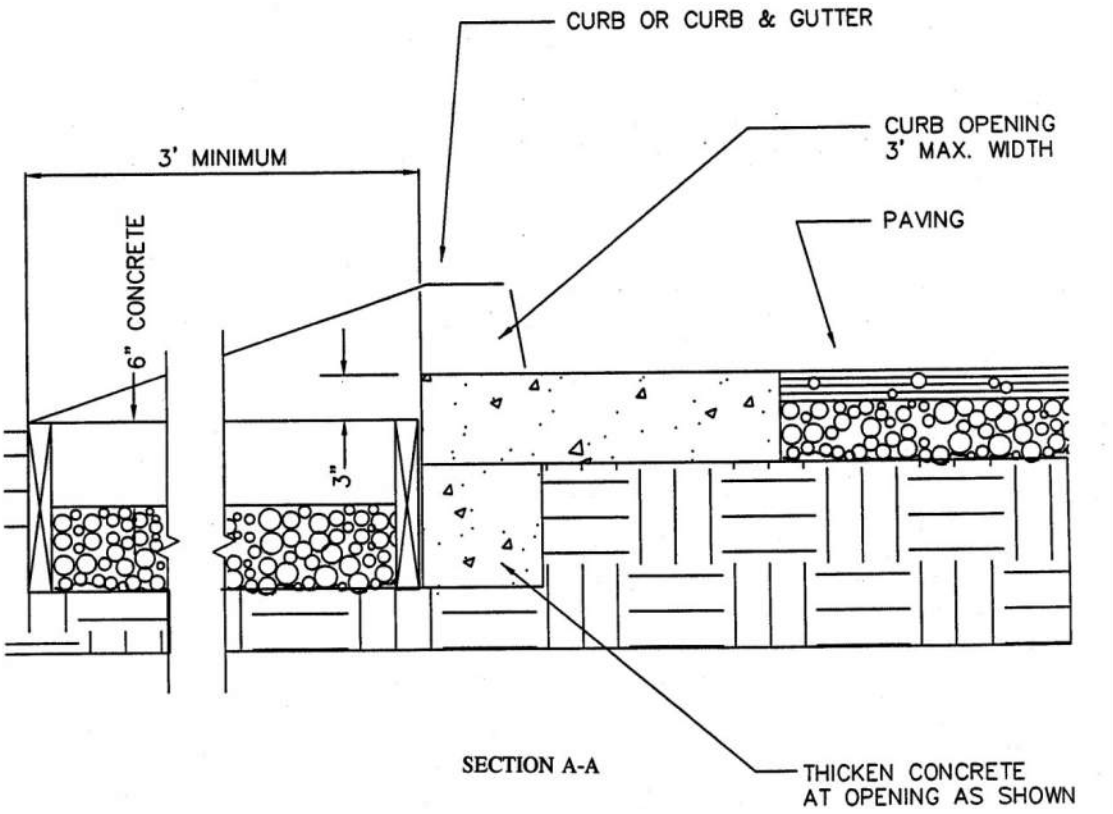

DRAWING 140

CURB INLET DETAIL

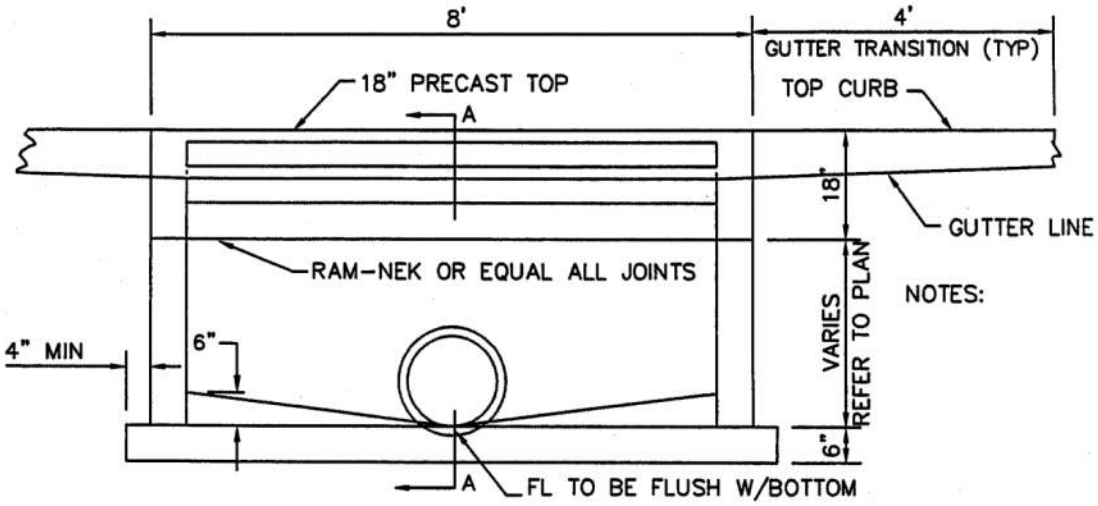

FRONT ELEVATION

1. Bottom shall be case in place.
2. Type C Ring and cover shall be provided.
3. #4 bars @ 10" ea. way in walls and slab.

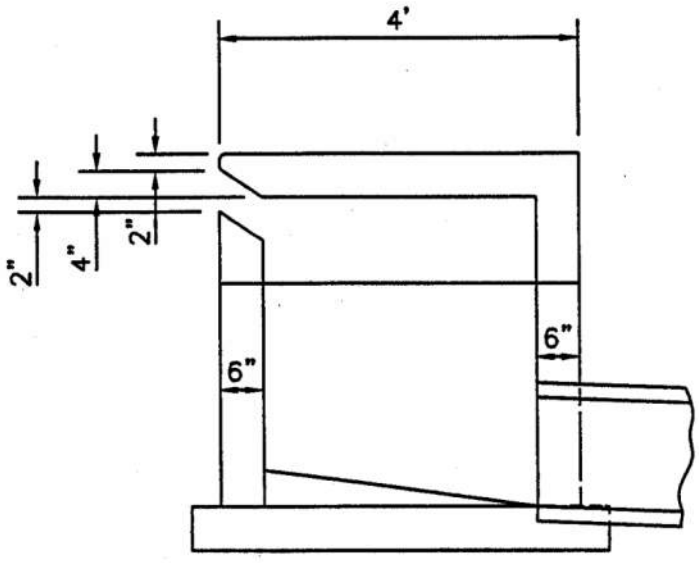

SECTION A-A

A. Removal of Article 410-VII Stormwater Management For Public And Private Improvements with the implementation of the new Stormwater Management and Design Criteria Manual (SMDCM).

B. Revisions to Article 410-VII Stormwater Management For Public And Private Improvements related to Stormwater Management and Design Criteria Manual[1]:

1. Section 410.650 - General Provisions

a. Sub-section A. Scope. – Covered in Section 1.1 of SMDCM
b. Sub-section B. Authority. – Covered in Section 1.2 of SMDCM
c. Sub-section C. Interpretations. – Covered in Section 1.3 of SMDCM
d. Sub-section D. Appeals. – Covered in Section 1.4 of SMDCM
e. Sub-section E. Approvals and Permits Required. – Covered in Section 1.5 of SMDCM
f. Sub-section F. Coordination with Other Jurisdictions – Covered in Section 1.6 of SMDCM
g. Sub-section G. Communications – Covered in Section 1.7 of SMDCM
h. Sub-section H. Ownership and Maintenance – Covered in Section 1.8 of SMDCM

2. Section 410.660 – Stormwater Planning and Design

a. Sub-section A. Stormwater Management Goals – Covered in Section 2.1 of SMDCM
b. Sub-section B. General Planning and Design Principles – Removed from SMDCM

3. Section 410.670 – Stormwater Runoff Calculations

a. Sub-section A.1 Determining Stormwater Runoff – Removed from SMDCM
b. Sub-section A.2 Rational Formula – Covered in Section 3.3 of SMDCM
c. Sub-section A.3 Time of Concentration – Covered in Section 3.6 of SMDCM
d. Sub-section A.4 Hydrograph Methods – Covered in Section 3.4 of SMDCM
e. Sub-section A.4.a.(4) Runoff Model – Covered in Section 2.2 of SMDCM
f. Sub-section A.4.b Rainfall – Covered in Section 3.4.2 of SMDCM

4. Section 410.680 – Stormwater Drainage Structures

a. Sub-section A. Inlets – Covered in Section 4.2 of SMDCM
b. Sub-section A.5 Allowable Street Depths – Covered in Section 4.3 of SMDCM
c. Sub-section A.5.b. Cross flow – Covered in Section 4.3.5 of SMDCM
d. Sub-section A.5.c. Hydraulics – Covered in Section 4.3.6 of SMDCM
e. Sub-section A.6. Types of Inlets Allowed – Covered in Section 4.2.5 of SMDCM
f. Sub-section B. Storm Sewers – Covered in Section 4.1 of SMDCM
g. Sub-section B.1.c. Vertical Alignment – Covered in Section 4.1.7 of SMDCM
h. Sub-section B.1.d Horizontal Alignment – Covered in Section 4.1.8 of SMDCM
i. Sub-section B.1.e. Pipe Size – Covered in Section 4.1.5 of SMDCM
j. Sub-section B.1.f. Storm sewer capacity and velocity – Covered in Section 4.1.5 of SMDCM
k. Sub-section B.1.g. Storm sewer outlets – Covered in Section 4.1.9 of SMDCM
l. Sub-section B.1.h. Hydraulic Evaluation – Covered in Section 4.1.10 of SMDCM
m. Sub-section B.1.i. Pipe friction losses – Covered in Section 4.1.10.4.1 of SMDCM
n. Sub-section B.2. Easements – Covered in Section 1.8.2.2 of SMDCM
o. Sub-section C. Design Standards for Culverts – Covered in Section 5 of SMDCM
p. Sub-section D. Design Standards for Bridges – Covered in Section 6 of SMDCM
q. Sub-section E. Design Standards for Open Channels – Covered in Section 7 of SMDCM

5. Section 410.680 – Stormwater Detention Design

a. Sub-section B. Policy – Covered in Section 8.1.1 of SMDCM

1. Refer to Exhibit E for Article 410-VII Stormwater Management for Public and Private Improvement Markups

b. Sub-section C. Methods of Analysis – Replaced with Section 8.4 of SMDCM
c. Sub-section C.3.e through C.3.f – Covered in Section 8.1.2 of SMDCM
d. Sub-section C.3.g. Minimum Fee in lieu of Detention – Removed from SMDCM
e. Sub-section C.4. Innovation in Design – Covered in Section 8.1.3 of SMDCM
f. Sub-section C. 5 Interpretation – Removed from SMDCM
g. Sub-section D. Design Criteria – Covered in Section 8.3 of SMDCM
h. Sub-section D.3 Submittals – Covered in Section 8.5 of SMDCM
i. Sub-section D.4 Simplified Analysis – Removed from SMDCM
j. Sub-section D.5 Control Structures – Covered in Section 8.6 of SMDCM

6. Section 410.700 Sinkholes and Karst Features – Covered in Section 9 of SMDCM

7. Section 410.710 Grading, Sediment and Erosion Control – Covered in Section 10 of SMDCM

1. Refer to Exhibit E for Article 410-VII Stormwater Management for Public and Private Improvement Markups

A. Removal of Article 410-VII Stormwater Management For Public And Private Improvements with the implementation of the new Stormwater Management and Design Criteria Manual (SMDCM).
B. Revisions to Article 410-VII Stormwater Management For Public And Private Improvements related to Stormwater Management and Design Criteria Manual[1]:
    1. Section 410.650 - General Provisions
        a. Sub-section A. Scope. – Covered in Section 1.1 of SMDCM
        b. Sub-section B. Authority. – Covered in Section 1.2 of SMDCM
        c. Sub-section C. Interpretations. – Covered in Section 1.3 of SMDCM
        d. Sub-section D. Appeals. – Covered in Section 1.4 of SMDCM
        e. Sub-section E. Approvals and Permits Required. – Covered in Section 1.5 of SMDCM
        f. Sub-section F. Coordination with Other Jurisdictions – Covered in Section 1.6 of SMDCM
        g. Sub-section G. Communications – Covered in Section 1.7 of SMDCM
        h. Sub-section H. Ownership and Maintenance – Covered in Section 1.8 of SMDCM
        i.
    2. Section 410.660 – Stormwater Planning and Design
        a. Sub-section A. Stormwater Management Goals – Covered in Section 2.1 of SMDCM
        b. Sub-section B. General Planning and Design Principles – Removed from SMDCM
    3. Section 410.670 – Stormwater Runoff Calculations
        a. Sub-section A.1 Determining Stormwater Runoff – Removed from SMDCM
        b. Sub-section A.2 Rational Formula – Covered in Section 3.3 of SMDCM
        c. Sub-section A.3 Time of Concentration – Covered in Section 3.6 of SMDCM
        d. Sub-section A.4 Hydrograph Methods – Covered in Section 3.4 of SMDCM
        e. Sub-section A.4.a.(4) Runoff Model – Covered in Section 2.2 of SMDCM
        f. Sub-section A.4.b Rainfall – Covered in Section 3.4.2 of SMDCM
    4. Section 410.680 – Stormwater Drainage Structures
        a. Sub-section A. Inlets – Covered in Section 4.2 of SMDCM
        b. Sub-section A.5 Allowable Street Depths – Covered in Section 4.3 of SMDCM
        c. Sub-section A.5.b. Cross flow – Covered in Section 4.3.5 of SMDCM
        d. Sub-section A.5.c. Hydraulics – Covered in Section 4.3.6 of SMDCM
        e. Sub-section A.6. Types of Inlets Allowed – Covered in Section 4.2.5 of SMDCM
        f. Sub-section B. Storm Sewers – Covered in Section 4.1 of SMDCM
        g. Sub-section B.1.c. Vertical Alignment – Covered in Section 4.1.7 of SMDCM
        h. Sub-section B.1.d Horizontal Alignment – Covered in Section 4.1.8 of SMDCM
        i. Sub-section B.1.e. Pipe Size – Covered in Section 4.1.5 of SMDCM
        j. Sub-section B.1.f. Storm sewer capacity and velocity – Covered in Section 4.1.5 of SMDCM
        k. Sub-section B.1.g. Storm sewer outlets – Covered in Section 4.1.9 of SMDCM
        l. Sub-section B.1.h. Hydraulic Evaluation – Covered in Section 4.1.10 of SMDCM
        m. Sub-section B.1.i. Pipe friction losses – Covered in Section 4.1.10.4.1 of SMDCM
        n. Sub-section B.2. Easements – Covered in Section 1.8.2.2 of SMDCM
        o. Sub-section C. Design Standards for Culverts – Covered in Section 5 of SMDCM
        p. Sub-section D. Design Standards for Bridges – Covered in Section 6 of SMDCM
        q. Sub-section E. Design Standards for Open Channels – Covered in Section 7 of SMDCM
    5. Section 410.680 – Stormwater Detention Design

1. Refer to Exhibit E for Article 410-VII Stormwater Management for Public and Private Improvement Markups

a. Sub-section B. Policy – Covered in Section 8.1.1 of SMDCM
b. Sub-section C. Methods of Analysis – Replaced with Section 8.4 of SMDCM
c. Sub-section C.3.e through C.3.f – Covered in Section 8.1.2 of SMDCM
d. Sub-section C.3.g. Minimum Fee in lieu of Detention – Removed from SMDCM
e. Sub-section C.4. Innovation in Design – Covered in Section 8.1.3 of SMDCM
f. Sub-section C. 5 Interpretation – Removed from SMDCM
g. Sub-section D. Design Criteria – Covered in Section 8.3 of SMDCM
h. Sub-section D.3 Submittals – Covered in Section 8.5 of SMDCM
i. Sub-section D.4 Simplified Analysis – Removed from SMDCM
j. Sub-section D.5 Control Structures – Covered in Section 8.6 of SMDCM

6. Section 410.700 Sinkholes and Karst Features – Covered in Section 9 of SMDCM
7. Section 410.710 Grading, Sediment and Erosion Control – Covered in Section 10 of SMDCM

1. Refer to Exhibit E for Article 410-VII Stormwater Management for Public and Private Improvement Markups

AGENDA ITEM ANALYSIS

Project/Issue Name:	23-43 An Ordinance of the City Council Amending Title II, Chapter 215, Article 215-IV of the Municipal Code of the City of Republic, Missouri, by Repealing Subsection (G) of Section 215.840 ("Weapons-Carrying Concealed-Other Unlawful Use").
Submitted By:	Laura Burbridge, City Clerk
Date:	September 19, 2023

Issue Statement

The consolidation agreement with Brookline contained a provision to amend or adjust the City's ordinances to make reasonable allowance for hunting in the larger open areas in the former village.

Discussion and/or Analysis

In 2008, City Council passed an amendment to allow for the discharge of a firearm under certain circumstances to address the provisions contained in the Brookline Consolidation Agreement. A sunset provision was placed in the Ordinance, which was originally set to expire at the end of 2011. The City Council has chosen to extend the sunset provisions every two years since the original sunset date; however, the provision expired in December of 2022. The ordinances extended by two-year periods to reassess the viability of continuing the exception to the offense of unlawful use of weapons.

Staff believes that based upon the pace of development in the area, an extension of the sunset provision is no longer appropriate, and the allowance of the exception to the offense is no longer viable. Since the consolidation of Brookline, over 1,000 acres of land has been annexed into city limits in the former Brookline area and over 400 of the agriculturally zoned property in the area has been rezoned to commercial and industrial property. With the industrialization of the area and higher traffic counts, the safety of continuing hunting in the area is of greater concern. Due to the concerns for the safety of those in and traveling through the area, staff recommends repealing Section 215.840, subsection G in its entirety.

Recommended Action

Staff recommends approval.

AN ORDINANCE OF THE CITY COUNCIL AMENDING TITLE II, CHAPTER 215, ARTICLE 215-VI OF THE MUNICIPAL CODE OF THE CITY OF REPUBLIC, MISSOURI, BY REPEALING SUBSECTION (G) OF SECTION 215.840 ("WEAPONS-CARRYING CONCEALED-OTHER UNLAWFUL USE")

WHEREAS, the City of Republic, Missouri, ("City" or "Republic") is a municipal corporation and Charter City located in Greene County, Missouri, being duly created, organized, and existing under the laws of the State of Missouri; and

WHEREAS, Section 215.840(G) of the Municipal Code of the City of Republic, Missouri ("City Code") provides a limited exception to the general prohibition against the use and discharge of firearms in City limits, for game use of specified firearms in certain areas and under certain conditions; and

WHEREAS, by its terms, the exception set forth in City Code Section 215.840(G) sunsets every two (2) years, unless extended or modified by City Council, to allow for the City to assess the state of development and growth in the affected area; and

WHEREAS, since the initial sunset expiration in 2011, the Council has voted to extend the sunset expiration date by an additional two (2) years, based upon updates and information on development in the area provided by staff; and

WHEREAS, as of December 31, 2022, the current codified sunset expiration date, the exception in Section 215.804(G) is no longer in force and effect; and

WHEREAS, due to the increasing pace of development and industrialization in the affected area, and higher traffic counts through the area, the Council believes another extension of the sunset expiration is no longer appropriate or advisable, as such extension would compromise the safety of residents and other persons traveling in and through the area; and

WHEREAS, for the reasons stated above, the Council believes it is in the best interest of the City to repeal subsection G of Section 215.840 in its entirety.

NOW, THEREFORE, BE IT ORDAINED BY THE CITY COUNCIL OF THE CITY OF REPUBLIC, MISSOURI, AS FOLLOWS:

Section 1: Title II ("Public Health, Safety and Welfare"), Chapter 215 ("Offenses"), Article 215-VI ("Offenses Concerning Weapons and Firearms"), Section 215.840 ("Weapons – Carrying Concealed – Other Unlawful Use") is hereby amended by repealing in its entirety Subsection G of Section 215.840 (Section 215.840(G)).

Section 2: All remaining provisions of Section 215.840 not repealed or modified by this Ordinance, and all other Sections of the Municipal Code of the City of Republic, Missouri not specifically referenced in this Ordinance shall remain unmodified and in full force and effect.

Section 3: The City Administrator or his/her designee, on behalf of the City, is authorized to take the necessary steps to execute this Ordinance.

Section 4: The WHEREAS clauses above are specifically incorporated herein by reference.

Section 5: The provisions of this Ordinance are severable, and if any provisions hereof are declared invalid, unconstitutional, or unenforceable, such determination shall not affect the validity of the remainder of this Ordinance.

Section 6: This Ordinance shall take effect and be in force from and after its passage as provided by law.

PASSED AND APPROVED at a regular meeting of the City Council of the City of Republic, Missouri, this _____ day of _____, 2023.

_____
Attest: Matt Russell, Mayor

_____
Laura Burbridge, City Clerk

Approved as to Form:



Megan McCullough, City Attorney

Final Passage and Vote:

Section 215.840 Weapons – Carrying Concealed – Other Unlawful Use

A. A person commits the offense of unlawful use of weapons, except as otherwise provided by Sections 571.101 to 571.121, RSMo., if he/she knowingly:

1. Carries concealed upon or about his/her person a knife, a firearm, a blackjack or any other weapon readily capable of lethal use into any area where firearms are restricted under Section 571.107, RSMo.; or
2. (Reserved)
3. Discharges or shoots a firearm within the City limits; or
4. (Reserved)
5. Has a firearm or projectile weapon readily capable of lethal use on his/her person, while he/she is intoxicated, and handles or otherwise uses such firearm or projectile weapon in either a negligent or unlawful manner or discharges such firearm or projectile weapon unless acting in self defense; or
6. Carries a firearm or any other weapon readily capable of lethal use into any church or place where people have assembled for worship, or into any election precinct on any election day, or into any building owned or occupied by any agency of the Federal Government, State Government or political subdivision thereof, or into any public assemblage of persons meeting for any lawful purpose; or
7. Carries a firearm, whether loaded or unloaded, or any other weapon readily capable of lethal use into any school, onto any school bus, or onto the premises of any function or activity sponsored or sanctioned by school officials or the district school board.
8. Possesses a firearm while also knowingly in possession of a controlled substance that is sufficient for a felony violation of Section 579.015, RSMo.

B. Subsections **(A)(1)**, **(6)** and **(7)** of this Section shall not apply to the persons described in this Subsection, regardless of whether such uses are reasonably associated with or are necessary to the fulfillment of such person's official duties except as otherwise provided in this Subsection. Subsections **(A)(3)** and **(4)** of this Section shall not apply to or affect any of the following persons, when such uses are reasonably associated with or are necessary to the fulfillment of such person's official duties, except as otherwise provided in this Subsection:

1. All State, County and Municipal Peace Officers who have completed the training required by the Police Officer Standards and Training Commission pursuant to Sections 590.030 to 590.050, RSMo., and who possess the duty and power of arrest for violation of the general criminal laws of the State or for violation of ordinances of Counties or Municipalities of the State, whether such officers are on or off duty, and whether such officers are within or outside of the law enforcement agency's jurisdiction, or all qualified retired Peace Officers, as defined in and who carry the identification defined in Subsections (12) and (13) of Section 571.030, RSMo., or any person summoned by such officers to assist in making arrests or preserving the peace while actually engaged in assisting such officer;
2. Wardens, superintendents and keepers of prisons, penitentiaries, jails and other institutions for the detention of persons accused or convicted of crime;

3. Members of the Armed Forces or National Guard while performing their official duty;
4. Those persons vested by Article **V**, Section 1, of the Constitution of Missouri with the judicial power of the State and those persons vested by Article III of the Constitution of the United States with the judicial power of the United States, the members of the Federal judiciary;
5. Any person whose bona fide duty is to execute process, civil or criminal;
6. Any Federal Probation Officer or Federal Flight Deck Officer as defined under the Federal Flight Deck Officer Program, 49 U.S.C. §44921, regardless of whether such officers are on duty, or within the law enforcement agency's jurisdiction;
7. Any State Probation or Parole Officer, including supervisors and members of the Board of Probation and Parole;
8. Any corporate security advisor meeting the definition and fulfilling the requirements of the regulations established by the Department of Public Safety under Section 590.750, RSMo.;
9. Any coroner, deputy coroner, medical examiner or assistant medical examiner;
10. Any municipal or county prosecuting attorney or assistant prosecuting attorney, circuit attorney or assistant circuit attorney, municipal, associate or circuit judge; or any person appointed by a court to be a special prosecutor who has completed the firearms safety training course required under Subsection (2) of Section 571.111, RSMo.;
11. Any member of a Fire Department or Fire Protection District who is employed on a full-time basis as a fire investigator and who has a valid concealed carry endorsement issued prior to August 28, 2013, or valid concealed carry permit under Section 571.111, RSMo., when such uses are reasonably associated with or are necessary to the fulfillment of such person's official duties; and
12. Upon the written approval of the Governing Body of a Fire Department or Fire Protection District, any paid Fire Department or Fire Protection District member who is employed on a full-time basis and who has a valid concealed carry endorsement issued prior to August 28, 2013, or a valid concealed carry permit, when such uses are reasonably associated with or are necessary to the fulfillment of such person's official duties.
13. Any person discharging a firearm inside the City limits in connection with any turkey shoot or other charitable event authorized by the City Council.

C. Subsections **(A)(1)**, **(5)** and **(7)** of this Section do not apply when the actor is transporting such weapons in a non-functioning state or in an unloaded state when ammunition is not readily accessible or when such weapons are not readily accessible. Subsection **(A)(1)** of this Section does not apply to any person nineteen (19) years of age or older or eighteen (18) years of age or older and a member of the United States Armed Forces, or honorably discharged from the United States Armed Forces, transporting a concealable firearm in the passenger compartment of a motor vehicle, so long as such concealable firearm is otherwise lawfully possessed, nor when the actor is also in possession of an exposed firearm or projectile weapon for the lawful pursuit of game, or is in his/her dwelling unit or upon premises over which the actor has possession, authority or control, or is traveling in a continuous journey peaceably through this

State. Subsection **(A)(7)** of this Section does not apply if the firearm is otherwise lawfully possessed by a person while traversing school premises for the purposes of transporting a student to or from school, or possessed by an adult for the purposes of facilitation of a school-sanctioned firearm-related event or club event.

D. Subsections **(A)(1)** and **(7)** of this Section shall not apply to any person who has a valid concealed carry permit issued pursuant to Sections 571.101 to 571.121, RSMo., a valid concealed carry endorsement issued before August 28, 2013, or a valid permit or endorsement to carry concealed firearms issued by another State or political subdivision of another State.

E. Subsections **(A)(3)**, **(4)**, **(5)** and **(7)** of this Section and Section **215.940(B)** of this Article shall not apply to persons who are engaged in a lawful act of defense pursuant to Section 563.031, RSMo.

F. Nothing in this Section shall make it unlawful for a student to actually participate in school-sanctioned gun safety courses, student military or ROTC courses, or other school-sponsored or club-sponsored firearm-related events, provided the student does not carry a firearm or other weapon readily capable of lethal use into any school, onto any school bus, or onto the premises of any other function or activity sponsored or sanctioned by school officials or the district school board.

~~G. The prohibition on discharge of a firearm contained in Subparagraph (3) of Subsection **(A)** of this Section shall not apply to those engaged in the lawful pursuit of game so long as the discharge of the handgun or shotgun takes place in a rural, agriculturally zoned area of the City and so long as the fired projectile does not enter onto or pass through property within two hundred (200) feet of a residence or commercial structure at a height lower than the top of the roofline of the residence or commercial structure.~~

~~1. For purposes of this Section, the phrase "rural, agriculturally zoned area" shall be described as properties of the City within an area commonly referred to as the "former Village of Brookline" and generally referenced as Farm Road 97 to the west, Farm Road 140 to the north, Farm Road 115 to the east and Farm Road 168/State Highway MM/State Route 60 to the south including the four contiguous forty-acre parcels adjacent to Farm Road 115 and south of Farm Road 146;~~

~~2. This exception shall only apply to the discharge of handguns or shotguns within the area described above.~~

~~3. This exception shall sunset on the 31st day of December, 2022, and shall no longer be in force and effect unless extended or renewed by the City Council.~~

H. The prohibition on discharge of a firearm contained in Subparagraph (3) of Subsection **(A)** of this Section shall not apply to discharge of a firearm when authorized by State law with regard to defense of livestock or other animals specifically identified by Statute and when such discharge takes place in the area and under the conditions as authorized in Subsection **(G)**.

I. The prohibition on discharge of a firearm contained in Subparagraph (3) of Subsection **(A)** of this Section shall not apply to firing ranges operated by a duly recognized law enforcement agency at a location approved by the City.

J. Nothing in Subsections **(G), (H)** and **(I)** is intended to allow what is prohibited by Section 571.030, RSMo.

EXPLANATION(S) - Matter in **underlined** type in the above is added language. Matter in ~~strikethrough~~ in the above is deleted.

CITY OF REPUBLIC VILLAGE OF BROOKLINE CONSOLIDATION

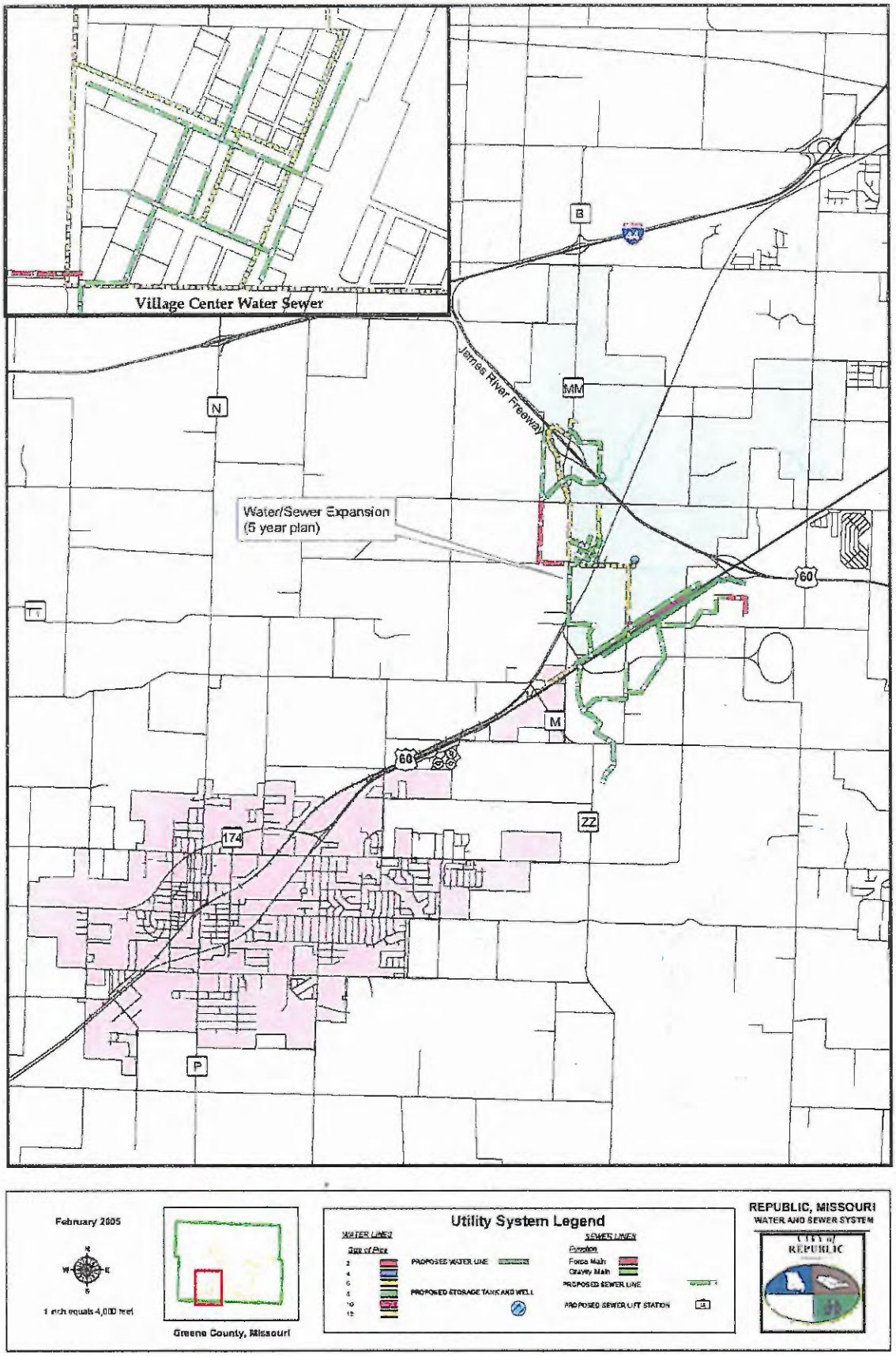

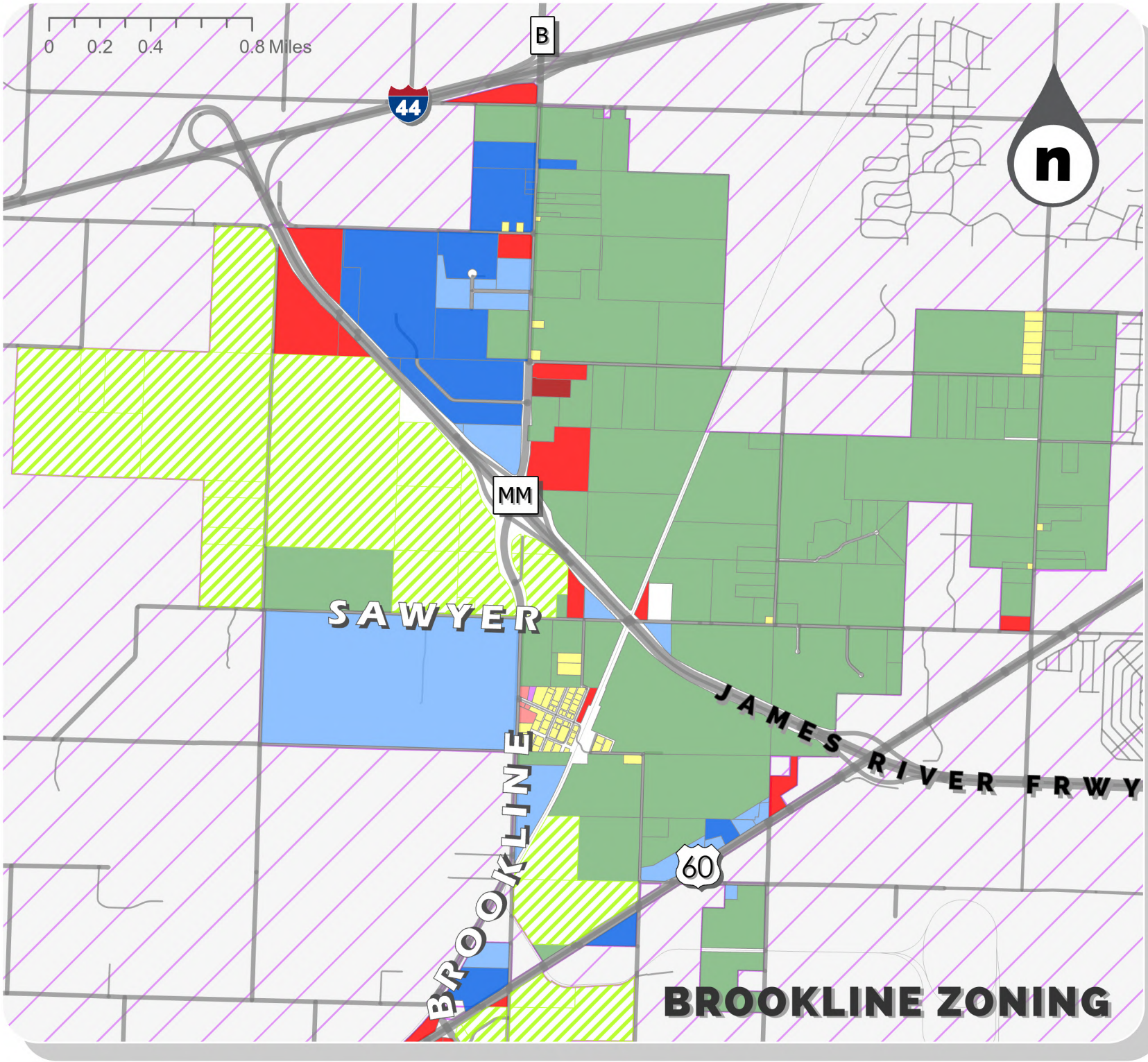

- AG Agricultural
- C-1 Commercial
- C-2 General Commercial
- C-3 General Commercial
- M-1 Light Manufacturing
- M-2 Heavy Manufacturing
- PDD Planned Development
- R1-L Single Family Low Density
- R1-M Single Family Medium Density
- R1-H Single Family High Density
- R1-Z Zero Lot Line Residential
- R-2 Two-family Residential
- R-3 Multi-family Residential

AGENDA ITEM ANALYSIS

Project/Issue Name: 23-44 An Ordinance of the City Council Approving the Final Plat of the Iron Grain Planned Development District Phase One.

Submitted By: Chris Tabor, BUILDS Department Principal Planner

Date: September 19, 2023

Issue Statement

The City of Republic's BUILDS Department received an Application for the Final Plat of Phase One of the Iron Grain District Subdivision on June 23, 2023.

Discussion and/or Analysis

The Final Plat of Iron Grain District Phase One will legally divide approximately fourteen point six two (14.62) acres of land into two (2) lots and includes the dedication of Utility, Drainage, and Access Easements.

The Final Plat of Iron Grain District Phase One encompasses areas three (3), four (4), and five (5) as designated in the Development Plan for Iron Grain District. The Final Plat submitted conforms to the Development Plan for Iron Grain District Planned Development District approved by City Council on February 22, 2022.

City Staff has reviewed the Final Plat and has determined that it substantially conforms to the requirements of the Approved Development Plan, in addition to the requirements of the City Code Chapter 410 Subdivision Regulations, and Article V Major Subdivision-Final Plat.

Recommended Action

Staff recommends approval of the Final Plat for Iron Grain District Phase One.

AN ORDINANCE OF THE CITY COUNCIL APPROVING THE FINAL PLAT OF THE IRON GRAIN PLANNED DEVELOPMENT DISTRICT PHASE ONE

WHEREAS, the City of Republic, Missouri, ("City" or "Republic") is a municipal corporation and Charter City located in Greene County, Missouri, being duly created, organized, and existing under the laws of the State of Missouri; and

WHEREAS, on February 22, 2022, via Ordinance 22-11, the Council approved the Development Plan for the Iron Grain District Planned Development District (PDD); and

WHEREAS, on June 23, 2023, Magers Republic No. 3C, LLC ("Applicant") submitted an application to the BUILDS Department for review and approval of the Final Plat of Phase 1 of the Iron Grain District Planned Development District ("Iron Grain District Phase 1"); and

WHEREAS, the BUILDS Department has reviewed Applicant's proposed Final Plat and determined it substantially conforms to the requirements of the approved Development Plan, the requirements of applicable City Code provisions including but not necessarily limited to Chapter 410 Subdivision Regulations, Article 410-V Major Subdivision--Final Plat.

NOW, THEREFORE, BE IT ORDAINED BY THE CITY COUNCIL OF THE CITY OF REPUBLIC, MISSOURI, AS FOLLOWS:

Section 1: That all conditions imposed by the Planning and Zoning Commission and the City Council relating to the acceptance and approval of Iron Grain District Phase 1 have been met.

Section 2: That the Final Plat of Iron Grain District Phase 1, attached and incorporated herein as "Attachment 1", is hereby approved in all respects.

Section 3: That the approval of the Final Plat of Iron Grain District Phase 1 is contingent upon the same being recorded within sixty (60) days after the approval certificate is signed and sealed under the hand of the City Clerk.

Section 4: That neither the construction of structures nor the sale of lots in Iron Grain District Phase 1 shall commence until the Final Plat of Iron Grain District Phase 1 has been duly approved and recorded as required by law.

Section 5: The whereas clauses are hereby specifically incorporated herein by reference.

Section 6: The provisions of this Ordinance are severable and if any provision hereof is declared invalid, unconstitutional, or unenforceable, such determination shall not affect the validity of the remainder of this Ordinance.

Section 7: This Ordinance shall take effect and be in force from and after its passage as provided by law.

PASSED AND APPROVED at a regular meeting of the City Council of the City of Republic, Missouri, this _____ day of _____, 2023.

_____

Attest: Matt Russell, Mayor

_____

Laura Burbridge, City Clerk

Approved as to Form:

Megan McCullough, City Attorney

Final Passage and Vote:

FINAL PLAT
IRON GRAIN DISTRICT PHASE I
SECTION 35, T29N, R23W



(IN FEET)
1 inch = 60 ft.

BASIS OF BEARINGS:

BEARINGS ARE GRID NORTH BASED ON THE MISSOURI STATE PLANE COORDINATE SYSTEM OF 1983, CENTRAL ZONE VIA GPS TIES TO THE MODOT VRS NETWORK.

OWNER/DEVELOPER:
MAGERS REPUBLIC NO 3C, LLC
2776 S CAMPBELL, A100
SPRINGFIELD, MO 65807

IRON GRAIN DISTRICT, LLC
2776 S CAMPBELL, A100
SPRINGFIELD, MO 65807

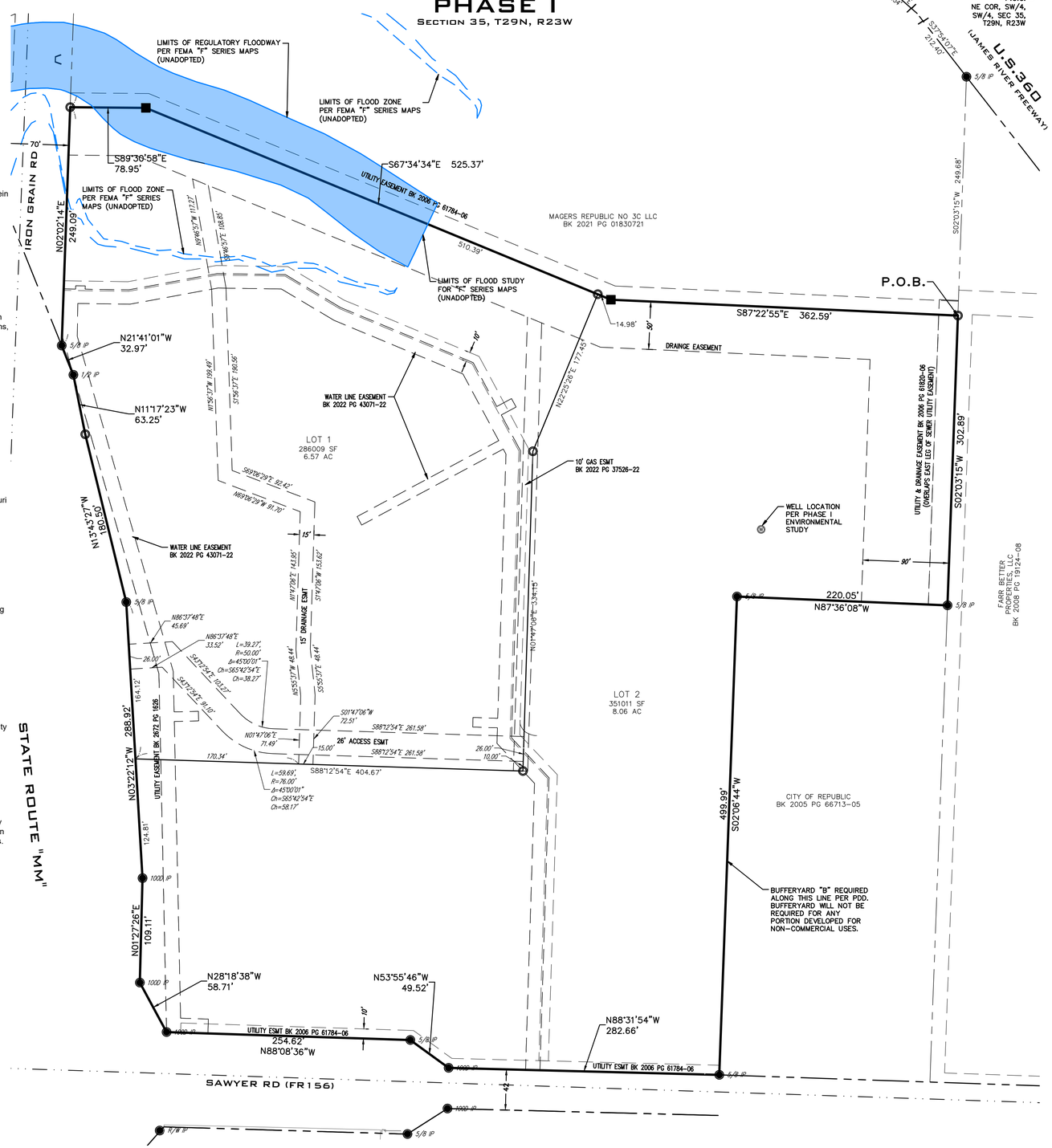

RECORDER'S BOX

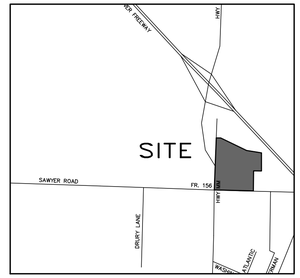

VICINITY MAP
NOT TO SCALE

LEGEND

- FOUND IRON PIN
- SET IRON PIN OR MARKER AS NOTED
- R/W MARKER
- BOUNDARY LINE
- R/W LINE
- EASEMENT LINE
- SETBACK LINE
- (M) MEASURED
- (P) PLAT
- (D) DEED
- (R) RECORD

REGISTERED LAND SURVEYOR'S CERTIFICATE
That I, Don Ray Berry do hereby declare that this plat was prepared under my supervision from an actual survey of the land herein described prepared by me dated October 28, 2021 and signed by me and that the corner monuments and lot corner pins shown herein were placed under my personal supervision in accordance with the current Missouri Standards for Property Boundary Surveys as Promulgated by the Missouri Department of Agriculture for URBAN class properties.

Signature: _____ Date Prepared: July 6, 2023

Missouri Professional Land Surveyor No. 2004017829

OWNER'S CERTIFICATE
OWNER(S) DEDICATION

Magers Republic No 3C LLC, as Owner(s), have caused the land described on this plat to be surveyed, divided, mapped, and all access rights reserved and dedicated as represented on the plat. I/We hereby dedicate, grant, and convey easements shown hereon to the City of Republic. No streets are created or dedicated by this plat. Furthermore, I/We, certify that there are no suits, actions, liens, or trusts on the property conveyed herein, and warrant generally and specially the property conveyed for public use and will execute such further assurances as may be required.

_____ Date: _____
Randy Magers, Manager/Member
Magers Republic No 3C LLC

ACKNOWLEDGMENT
State of Missouri)
) SS
County of _____)

On this _____ day of _____, 2023, before me personally appeared Randy Magers, to me known, who duly sworn, did say that they are a Manager/Member of Magers Republic No 3C LLC and that the foregoing instrument was signed on behalf of and by the authority of the Managers/Members of said Limited Liability Company, and said person acknowledged said instrument to be the free act and deed of said Limited Liability Company.

In witness whereof, I have hereunto set my hand and affixed my official seal at my office in _____County, Missouri on the day and year first above written.

_____ _____
Notary Public Commission Expires

_____
Printed Name

CERTIFICATE OF TAXES PAID
CERTIFICATE OF TAXES PAID There are no unpaid taxes due and payable at the time of plat approval and no unpaid special assessments, whether or not due and payable at the time of plat approval on any of the lands included in this plat, and all outstanding taxes and special assessments have been paid on all property dedicated to public use.

_____ _____ Parcel Number

_____ County Collection Official

_____ Date

CITY COUNCIL CERTIFICATE
APPROVAL BY THE CITY COUNCIL I, _____, City Clerk of the City of Republic, Greene County, Missouri, Do hereby certify that the Plat of Iron Grain District was presented to, accepted and approved by the City Council of said City of Republic, and approved by General Ordinance No. _____on the _____day of _____, 2023.

_____ _____ City Clerk

_____ Date

COMPLIANCE WITH LAND USE REGULATIONS CERTIFICATION, CERTIFICATE OF COMPLIANCE WITH ZONING AND SUBDIVISION REGULATIONS
CERTIFICATE OF COMPLIANCE WITH ZONING AND SUBDIVISION REGULATIONS I, _____, City Planner of the City of Republic, Missouri, do hereby certify on the _____ day of _____, 2023, the Final Plat of Iron Grain District conforms to the City of Republic Land Use Regulations, in accordance with Title IV of the Republic Code of Ordinances.

PROPERTY DESCRIPTION (Parent Tract: Book 2021 Page 01830721)

All that part of the Southwest Quarter of the Southwest Quarter of Section 35, Township 29 North, Range 23 West of the Fifth Principal Meridian, Greene County, Missouri, being more particularly described as follows: BEGINNING at the Northeast corner of the Southwest Quarter of the Southwest Quarter of said Section 35; thence, North 88°11'38" West, a distance of 619.73 feet to an existing iron pin on the Southerly right-of-way line of U.S. Highway 360 (James River Expressway); thence, South 48°28'01" East, along and with said Southerly line, a distance of 160.34 feet to an existing right-of-way marker; thence, South 37°54'07" East, along and with said Southerly line, a distance of 212.40 feet to an existing iron pin; thence, South 02°03'15" West, leaving said Southerly line, a distance of 249.68 feet to the Southerly line of an existing sanitary sewer easement as recorded in Book 2006 Page 61784-06 of the Greene County Deed Records and the POINT OF BEGINNING; thence, continue South 02°03'15" West, a distance of 302.89 feet to an existing iron pin; thence, North 87°36'08" West, a distance of 220.05 feet to an existing iron pin ;thence, South 02°06'44" West, a distance of 499.99 feet to an existing iron pin on the North right-of-way line of Farm Road 156; thence, North 88°31'54" West, along and with said North line, a distance of 282.66 feet; thence, North 53°55'46" West, along and with said North line, a distance of 49.52 feet to an existing iron pin; thence, North 88°08'36" West, along and with said North line, a distance of 254.62 feet to an existing iron pin on the East right-of-way line of State Route "MM"; thence, Northerly, along and with said East line, the following six (6) courses:

North 28°18'38" West, a distance of 58.71 feet to an existing iron pin; thence, North 01°27'26" East, a distance of 109.11 feet to an existing iron pin; thence, North 03°22'12" West, a distance of 288.92 feet to an existing iron pin; thence, North 13°43'27" West, a distance of 180.50 feet to an existing iron pin; thence, North 11°17'23" West, a distance of 63.25 feet to an existing iron pin; thence, North 21°41'01" West, a distance of 32.97 feet to an existing iron pin

at the intersection of said Northerly line with the East right-of-way line of Brookline Road (Old Route "MM"); thence, North 02°02'14" East, along and with said East line, a distance of 249.09 feet to the South line of the aforementioned sanitary sewer easement; thence, along and with said South line, the following three (3) courses:

South 89°30'58" East, a distance of 78.95; thence, South 67°34'34" East, a distance of 525.37 feet; thence, South 87°22'55" East, a distance of 362.59 feet

to the POINT OF BEGINNING, containing 14.62 acres and being subject to easements, restrictions or rights-of-way, if any.

REFERENCE SOURCE DOCUMENTS:
PB AAA Page 197, SRB5490 Page 2714, SRB5490 Page 3440 & other County Surveys
Deeds as Noted
Prior Surveys by this Firm
State of Missouri Highway Plans for US 360 and State Route "MM"

GENERAL INFORMATION

Current Zoning: Iron Grain District PDD
Ordinance 22-11, February 22, 2022
The PDD shall comply with the Municipality of Republic's C-2 (General Commercial District) and R-3 (Multi-Family Residential District) Regulations.

Setbacks: Front: 15'
Side: 15'
Rear: 15'

Zoning Regulation Exceptions
Parking Requirements: 85% of zoning ordinance requirements.

Bulk Plane: All uses are exempt from bulk plane requirements.

Residential Density: R-3 uses may have up to 25 dwelling units per acre.

Lot Information:
Number of Lots 2
Total Acerage 837,020 SF (14.62 AC)
Largest Lot 351,011 SF (8.06 AC) Lot 2
Smallest Lot 286,009 SF (6.57 AC) Lot 1

Property owner is responsible for addressing open space, landscaping, and buffer yard requirements when the lots are developed.

IN THE RECORDER'S OFFICE
I, Cheryl Dawson-Spaulding, Recorder of Deeds, Greene County, Missouri, do hereby certify that the within instrument of writing was on the ____ day of _____, 2023, duly filed for record and is recorded in the records in this office in Book _____, Page _____ in testimony whereof, I have hereunto set my hand and affixed my official seal at my office in Springfield, Missouri, this ____ day of _____, 2023.

_____
Recorder of Deeds

_____
Date

FLOOD NOTE:
This property lies in Flood Zone "X" (areas determined to be outside of the 0.2% annual chance floodplain) according to FIRM Community Panel 29077c 0316 E, effective December 17, 2010.

However, the proposed "F" series maps, not yet adopted or effective, show a portion of the property lying within the Flood Hazard Area along with a designated floodway. The approximate limits of the hazard area shown on the proposed maps are reflected on this survey.

BY:									
DATE:									
REVISIONS:									
SCALE: 1" = 60'	FIELD BY: JS, AL	DRAWN BY: DRB	CHECKED BY: JS						

Final Plat
IRON GRAIN DISTRICT PHASE I
State Highway MM & Sawyer Road
Republic, Greene County, Missouri

LEE Engineering & Associates, L.L.C.
1200 E. Woodhurst Dr., Suite D200
Springfield, Missouri 65804
417-886-9100 (phone)
417-886-9336 (fax)
dlee@leeengineering.biz

"Engineering with Integrity"

Missouri State Certificate of Authority
Engineering #2005015504
Land Surveying #2009028050

STATE OF MISSOURI
DON RAY BERRY
NUMBER
PLS-2004017829
PROFESSIONAL LAND SURVEYOR

DATE: 2023-07-06
SHEET: 1 OF 1
PROJECT: 2123
FILE: 2123 - Magers Final Plat.dwg

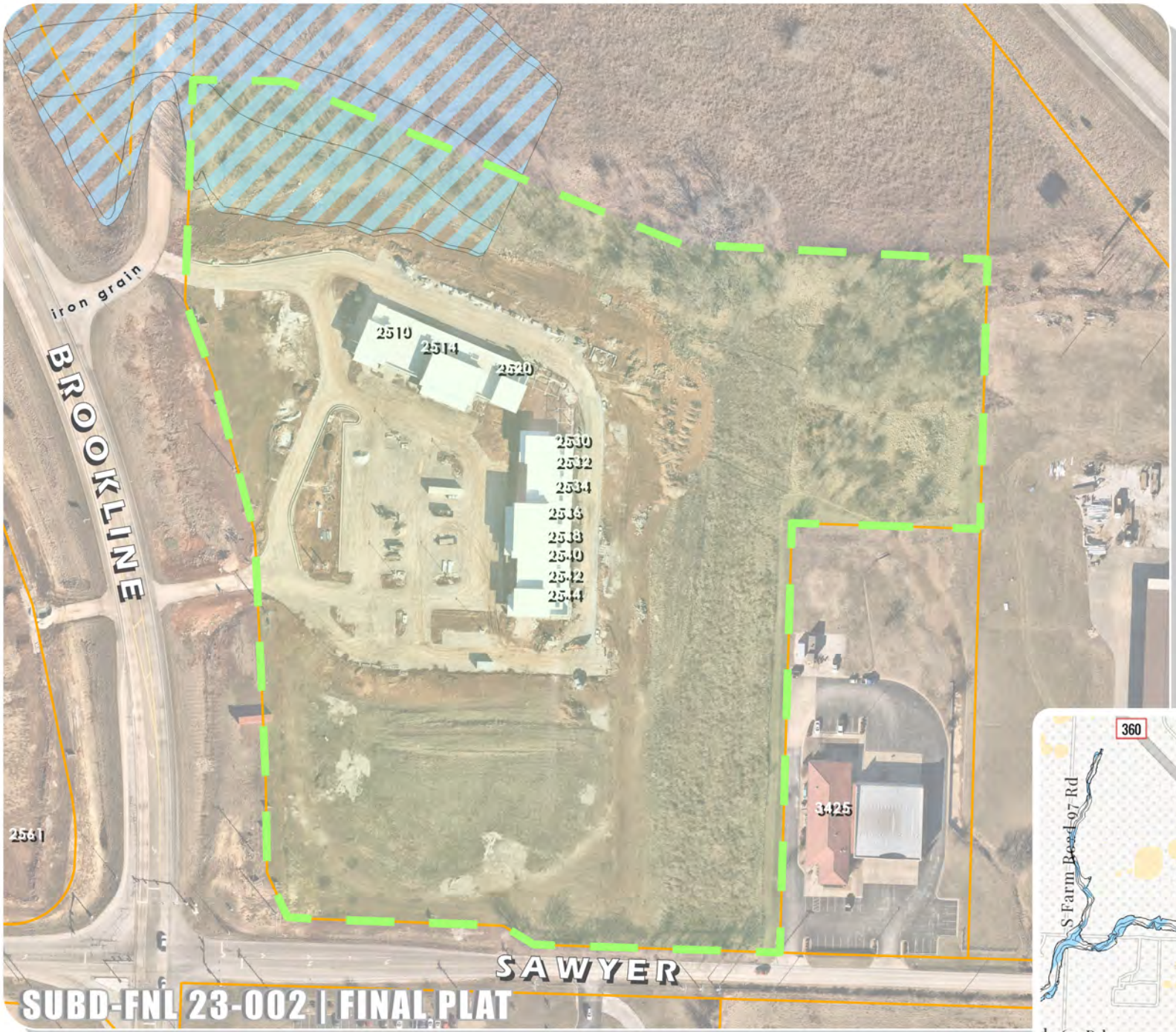

SUBD-FNL 23-002 | FINAL PLAT

OWNER
MAGERS REPUBLIC NO 3C LLC

ADDRESS
2510 S ST HWY MM

PIN
881435300010

ZONING
PDD | REQUESTED: N/A

WARD
2

ACREAGE
14.62

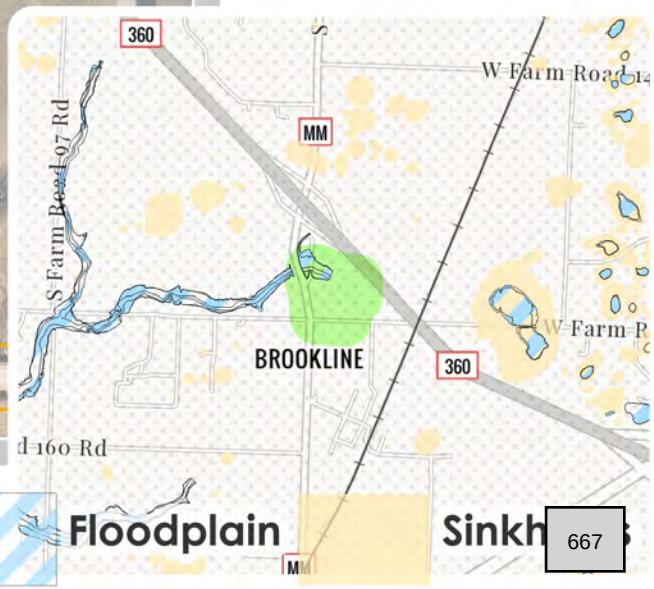

IRON GRAIN DISTRICT
PHASE ONE

Site Extent

Floodplain

Sinkh

AGENDA ITEM ANALYSIS

Project/Issue Name:	23-R-55 A Resolution of the City Council Amending Resolution 23-R-44 and Authorizing the City Administrator to Execute An Agreement With Redec, LLC for Continuation of Professional Services for 2023-2024 in Connection with the City's Efforts to Obtain Funding for its New Wastewater Treatment System.
Submitted By:	David Cameron, City Administrator
Date:	August 29, 2023

Issue Statement

An agreement to authorize a new contract for professional services provided by Redec, LLC ("Redec") for advisory services in connection with the City's efforts to obtain funding during the 2023-2024 Legislative Sessions for its wastewater improvements.

Discussion and/or Analysis

This Resolution is intended to correct the Council's most recent authorization (via 23-R-44) for expenditures for Redec's services up to $175,000 such that the new NTE figure is not inclusive of previously incurred or spent costs/fees, and to ensure the NTE figure aligns with the monthly billing amounts of $15,000 under the contract. This Resolution would authorize execution of a new one-year contract with Redec, which will supersede the current agreement, and authorize a not-to-exceed of up to $180,000, which accounts for billing of up to $15,000 per month for the contract period of one year, and would not include previously paid costs/fees for the services rendered under prior contracts.

Consistent with the services Redec has provided to the City since December of 2021, the scope of work includes, but is not necessarily limited to, providing insight on the legislative processes and procedures in applying for, obtaining, and properly utilizing funding from sources such as the American Rescue Plan Act ("ARPA") and other similar funding opportunities, reviewing documents relating to the City's efforts to obtain such funding, assisting with messaging content and presentation of application information and other important data, and assisting with strategy and logistics designed to aid the City in determining with whom and where to communicate its needs for wastewater funding.

To date, Redec has provided valuable services that have aided the City in successfully obtaining the allocation of $55 million from state and federal funding sources for the ongoing wastewater improvements in the City. The completion date of all wastewater improvements is December 2026, and the City believes the continued assistance from Redec will increase its chances of procuring additional funds, ultimately reducing financial burden to the taxpayers.

Recommended Action

Staff recommends approval.

A RESOLUTION OF THE CITY COUNCIL AMENDING RESOLUTION 23-R-44 AND AUTHORIZING THE CITY ADMINISTRATOR TO EXECUTE AN AGREEMENT WITH REDEC, LLC FOR CONTINUATION OF PROFESSIONAL SERVICES FOR 2023-2024 IN CONNECTION WITH THE CITY'S EFFORTS TO OBTAIN FUNDING FOR ITS NEW WASTEWATER TREATMENT SYSTEM

WHEREAS, the City of Republic, Missouri ("City" or "Republic") is a municipal corporation and Charter City located in Greene County, Missouri, being duly created, organized, and existing under the laws of the State of Missouri; and

WHEREAS, with authorization from City Council via Ordinance 21-62, the City entered into an Abatement Order on Consent with the Department of Natural Resources ("DNR Order") on or about October 5, 2021, to address the deficiencies with the City's Wastewater Treatment System ("WWTS") and to reach compliance with all applicable regulations by April of 2025; and

WHEREAS, the State of Missouri has announced a financial commitment from its American Rescue Plan Act ("ARPA") funds allocation for water infrastructure improvements pursuant to which it will award those funds to select communicates in the form of grant programs; and

WHEREAS, the City has been working diligently to obtain available ARPA and other funding for the new WWTS, which is a multi-step, complex process that begins with applying for and obtaining the funds and subsequently requires staff to carefully and properly document, allocate, obligate, and responsibly spend the funds in accord with the conditions under which they were awarded; and

WHEREAS, the City anticipates the required improvements to the WWTS will continue through April of 2025, or until all necessary improvements are completed (if sooner than April of 2025); and

WHEREAS, on November 30, 2021, via Resolution 21-R-59, Council authorized the City to enter into an agreement Redec, LLC ("Redec") for the provision of advisory services and assistance in connection with the City's efforts to obtain the funds needed to bring the WWTS into compliance, at an expense not to exceed $100,000 without separate or additional approval of Council; and

WHEREAS, on July 19, 2022, via Resolution 22-R-37, Council authorized renewal of the City's agreement with Redec for continuation of its services in connection with the WWTS funding efforts for 2022-23, at an additional cost not to exceed $100,000 without separate approval of Council; and

WHEREAS, on July 18, 2023, via Resolution 23-R-44, Council authorized renewal of the City's agreement with Redec for continuation of its services in connection with the WWTS funding efforts for 2023-24, at a cost not to exceed $175,000 without additional approval of Council; and

WHEREAS, following passage of Resolution 23-R-44 and prior to execution of any renewal of the agreement, staff identified an error in Resolution 23-R-44 as it indicates the not-to-exceed amount is to be "inclusive of costs previously paid by City to Redec for the same or similar services," though the intent was that the not-to-exceed amount apply solely to the new contract period of 2023-2024; and

WHEREAS, staff believes authorization of up to $180,000 (as opposed to $175,000) for the 2023-2024 contract period is appropriate in order to align with the contemplated monthly billing amount of $15,000[1] under the agreement authorized herein, and to correct the error in 23-R-44; and

WHEREAS, the City believes Redec's services have significantly contributed to its success to date in working to reduce the financial burden on its citizens in connection with the WWTS efforts, and wishes to continue with its engagement, but requires authorization from Council to execute a new contract that allows expenditures of up to $180,000, not inclusive of prior amounts authorized or expended for the services; and

WHEREAS, Council believes it is in the City's best interest to authorize the City Administrator to enter into an agreement with Redec for continuation of its services for an additional one year term, at a total cost not to exceed $180,000 for the services provided under said agreement, as the City has achieved success under Redec's guidance to date in obtaining a sizeable portion of the cost for the new WWTS and approval of such expenditure will help maximize the City's chances of successfully procuring the remainder of the funding needed for the WWTS from outside sources such as ARPA, ultimately reducing financial burden on the City's residents.

NOW, THEREFORE, BE IT RESOLVED BY THE CITY COUNCIL OF THE CITY OF REPUBLIC, MISSOURI, AS FOLLOWS:

Section 1: The City Administrator, and/or his designee, is authorized on behalf of the City to enter into an agreement with Redec, LLC for its continued professional services relating to the City's efforts to obtain funding for its new wastewater treatment system, to be in substantially the same form as that attached hereto and labeled "Attachment 1."

Section 2: The City Administrator, and/or his designee, is authorized on behalf of the City to expend a sum up to but not to exceed $180,000 under the contract approved herein. Any expenditure for the services referenced herein that exceeds the amount authorized herein shall require separate, additional approval from Council.

Section 3: The City Administrator, and/or his designee, is authorized on behalf of the City to take the steps necessary to execute this Resolution and initiate the engagement described herein.

Section 4: The WHEREAS clauses are hereby specifically incorporated herein by reference.

Section 5: This Resolution shall become effective on and after the date of passage and approval as provided by law.

PASSED AND APPROVED at a regular meeting of the City Council of the City of Republic, Missouri, this _____ day of _____, 2023.

[1] The monthly billing amount of $15,000 is also contemplated under the previous and current agreements between the City and Redec; however, the total cost authorized under the previous and current agreements was $100,000.

_____

Matt Russell, Mayor

ATTEST:

_____

Laura Burbridge, City Clerk

Approved as to Form:



Megan McCullough, City Attorney

Final Passage and Vote:

SERVICES AGREEMENT

THIS AGREEMENT ("Agreement" and/or "Agreement"), made and entered into as of the date on which the last signature was affixed hereto below, by and between City of Republic, Missouri (the "City") and Redec, LLC ("Redec"), (together, "the Parties") shall be governed by the following terms and conditions:

WITNESSETH:

WHEREAS, City wishes to enter into an agreement with Redec for the provision of certain services as further described herein below in paragraph (1) ("Services"); and

WHEREAS, Redec wishes to provide the Services to City in exchange for fair and adequate consideration stated herein.

NOW, THEREFORE, for the consideration stated herein below, the validity and sufficiency of which is acknowledged by the Parties, it is agreed by and between City and Redec as follows:

1. **Services.** Redec, acting on its own behalf and through its officers, employees and authorized agents, shall provide the City with professional consulting services which includes, but is not necessarily limited to, advice and assistance in understanding grant administration and determining processes related to planning for, applying, obtaining, documenting, allocating, and utilizing identified grants and grant funding, including such as may be available through the State of Missouri and American Rescue Plan Act ("ARPA") funds, and particularly in relation to the City's ongoing efforts in relation to wastewater treatment needs of the City, including such as may be necessary to comply with an Abatement Order on Consent with the Department of Natural Resources approved by the City Council on October 5, 2021 by Ordinance 21-62, to address Wastewater Treatment Plant deficiencies (the "Services"). Redec acknowledges that providing the Services may entail travel and rendering assistance to the City in communicating facts regarding these topics to members of the public. The Services shall be provided by Redec in accordance with the standard of care, skill, and expertise ordinarily used by other members of Redec's profession in performing similar services.

2. **Excluded from Services.** Redec will at all times strictly comply with all applicable state, federal, and local law. Redec represents to the City that it is experienced with the types of grant administrative processes and services referenced herein. Redec, based on its experience, and in consultation with its own legal professionals, is also familiar with legal restrictions related to provision of legal services, lobbying, or advocacy, all of which are outside the scope of services authorized by this Agreement. The Parties acknowledge and understand that Redec is not a law firm, does not provide legal services to third-parties, and will not provide legal advice to the City, nor otherwise engage in the practice of law in connection with this Agreement, and this Agreement does not create an attorney-client relationship. Redec will not engage in advocacy of any kind on behalf of the City, including advocacy to officials, entities, the public, or any person whomsoever, nor will Redec act in any manner that could be construed as lobbying or public advocacy on behalf of the City. Nothing in this Agreement authorizes Redec to act on behalf of the City or as an agent for the City at any time.

3. **Personnel**. Redec shall secure, at its own expense, all personnel required to perform the Services. Such personnel shall not be employees of the City or have any contractual relationship with the City except to the extent such a relationship exists by way of this Agreement. The Services shall be performed by Redec, or under Redec's direct supervision, and all personnel engaged in performing the Services shall be fully qualified and authorized under local, state and federal law to

perform such Services. None of the Services covered by this Agreement shall be subcontracted by Redec without the prior, written approval of the City.

4. **Duty to Timely Communicate**. Redec will keep the City informed of all progress and developments and respond promptly to City's inquiries and communications relating to the Services or this Agreement. In the event Redec determines for any reason that an act it has performed or needs to perform in order to satisfy its obligations under this Agreement falls outside of the scope of Services, Redec shall promptly notify the City of such, including any inability to proceed as a result thereof. Failure to timely report such information to the City under this paragraph shall constitute a material breach of this Agreement.

5. **Term.** This Agreement will commence when all Parties have caused their authorized representative(s) to sign, becoming effective as of the date of the last signature herein below. The Agreement will continue for one (1) year from the effective date, unless otherwise terminated by either Party prior to such date.

6. **Fees, Costs and Total Payment Not-to-Exceed.** Provided Redec performs the Services in the manner set forth herein, City will pay to Redec a sum of up to fifteen thousand dollars and zero cents ($15,000.00) per month, for each month in which Services are actually performed under this Agreement. The Parties agree and understand that the City is limited in the amount of funds it may pay for the Services, and consequently will, in no event, pay to Redec a total amount in excess of one hundred eighty thousand dollars and zero cents ($180,000.00) (the "Not-to-Exceed Amount") for Services rendered under this Agreement. The Parties expressly acknowledge that the Not-to-Exceed Amount may not be exceeded unless this Agreement is amended, in writing and signed by all Parties, pursuant to approval of the City Council, which shall be a prerequisite to any such amendment. This Agreement is expressly contingent upon the City having sufficient funds available for the Services. Redec acknowledges it shall have no right of action against City in the event City is unable to perform its obligations under this Agreement as a result of insufficient funds.

Redec shall keep track of the amount of hours and expenses billable under this Agreement at all times, and any work performed by Redec in excess of the Not-to-Exceed Amount shall not be eligible for payment. Redec shall promptly notify the City if Redec anticipates that the Not-to-Exceed Amount may be exceeded in advance of performing any Services under this Agreement that would cause such overage to occur.

The City expressly reserves the right to disapprove, in whole or in part, a request for payment where the Services rendered during the period for which payment is claimed are not performed in a timely and satisfactory manner in accordance with terms herein.

7. Termination of Agreement.

a. This Agreement may be terminated by either party with or without cause, upon written notice, effective when received by the non-terminating party. Upon notice and termination, final payment to Redec shall be limited to Services provided by Redec as of the effective date of said termination. In any event, notwithstanding any notice requirement stated herein, this Agreement shall terminate automatically upon the termination of funding in City's budget for the Services included in this Agreement.

b. This Agreement may be terminated by City without penalty or other monies or damages owed to Redec in the event the City Council declines or otherwise fails to approve and/or appropriate funds for this Agreement.

c. Noncompliance with any portion of the Agreement, or violation of State, Federal, or local law will be just cause for immediate termination of this Agreement.

8. **Conflicts**. Redec presently has no interest and shall not acquire any interest, direct or indirect, which would conflict in any manner or degree with the performance of Services to be performed under this Agreement. In accepting this Agreement, Redec certifies all local, state, and federal laws and regulations related to conflicts of interest shall be followed, specifically Chapter 105, RSMo.

9. **Assignment**. Redec shall neither assign nor transfer any interest in this Agreement, whether by assignment, sale, gift, novation or otherwise, without prior written consent of City; provided, however, that claims for money due or owing to Redec under this Agreement may be assigned to a bank, trust company, or other financial institution without such approval. Notice of such assignment or transfer shall be furnished in writing promptly to City. Any such assignment is expressly subject to all rights and remedies of City under this Agreement, including the right to change or delete activities from the Agreement or to terminate the same as provided herein, and no such assignment shall require City to give any notice to any such assignee of any actions which City may take under this Agreement.

10. **Nondiscrimination**. In providing the Services under this Agreement, Redec agrees not to discriminate in any way on the basis of race, creed, color, national origin or ancestry, sex, religion, handicap, age, status as a protected veteran or a qualified individual with a disability, or political opinion or affiliation, against any employee of Redec or applicant for employment, and shall include a similar provision in any sub-contracts executed hereunder. The Parties hereby incorporate the requirements of 41 C.F.R. §§ 60- 1.4(a)(7), 29 C.F.R. Part 471, Appendix A to Subpart A, 41 C.F.R. § 60-300.5(a) and 41 C.F.R. § 60-741.5(a), if applicable.

a. Redec shall abide by the provisions of 41 C.F.R. § 60-300.5(a), which prohibits discrimination against qualified protected veterans, and requires affirmative action by covered prime contractors and subcontractors to employ and advance in employment qualified protected veterans.

b. Redec shall abide by the provisions of 41 C.F.R. § 60-741.5(a), which prohibits discrimination against qualified individuals on the basis of disability, and requires affirmative action by covered prime contractors and subcontractors to employ and advance in employment qualified individuals with disabilities.

11. **Compliance with Laws and Tax Obligations**. Redec agrees to comply with all applicable federal, state and local laws, rules and regulations applicable in providing the Services pursuant to this Agreement. Redec affirmatively represents that payment of all local, state, and federal taxes and assessments owed by Redec is current.

12. **Occupational License**. If required by City code or other applicable state or federal law, Redec shall obtain and maintain an occupational license with the City, the cost for which shall be the sole responsibility of Redec.

13. **Affidavit for Contracts Over $5,000**. Pursuant to Sections 285.525 through 285.550, RSMo., if this Agreement exceeds the amount of $5,000 and Redec is associated with a business entity, Redec shall provide an acceptable notarized affidavit stating that the associated business entity is enrolled in and participates in a federal work authorization program with respect to the employees

working in connection with the Services, and that said business entity does not knowingly employ any person who is an unauthorized alien in connection with the Services. Additionally, Redec must provide documentation for said business entity evidencing current enrollment in a federal work authorization program.

14. **Affidavit for Compliance with Anti-Discrimination against Israel Act for Contractors Over $100,000.** Pursuant to Section 34.600, RSMo., if this Agreement exceeds the amount of $100,000 and Redec is associated with a business entity that has ten or more employees, Redec shall provide an acceptable notarized affidavit stating that the associated business entity is not currently engaged in and shall not for the duration of the Agreement, engage in a boycott of goods or services from the State of Israel; is not currently engaged in and shall not, for the duration of the Agreement, engage in a boycott of goods or services from companies doing business in or with the State of Israel or authorized by, licensed by, or organized under the laws of the State of Israel; or is not currently engaged in and shall not for the duration of this Agreement, engage in a boycott of goods or services from persons or entities doing business in the State of Israel.

15. **General Independent Contractor Clause**. This Agreement does not create an employee/employer relationship between the Parties. It is the Parties' intention that Redec is and shall be an independent contractor for City and is not an employee of City for any purpose, including, but not limited to, the application of the Fair Labor Standards Act minimum wage and overtime payments, Federal Insurance Contribution Act, the Social Security Act, the Federal Unemployment Tax Act, the provisions of the Internal Revenue Code, Missouri revenue and taxation laws, Missouri workers' compensation and unemployment insurance laws. Redec will retain sole and absolute discretion in the judgment of the manner and means of carrying out Redec's activities and responsibilities hereunder. Redec agrees that it is a separate and independent enterprise from City, that it has a full opportunity to find other business, that it has made its own investment in its business, and that it will utilize a high level of skill necessary to perform the Services. This Agreement shall not be construed as creating any joint employment relationship between Redec and City, and City will not be liable for any obligation incurred by Redec, including but not limited to unpaid minimum wages and/or overtime premiums.

16. **City Benefits**. Redec shall not be entitled to any of the benefits established for the employees of City nor be covered by City's worker's compensation program/benefits.

17. **Liability and Indemnity**. The Parties mutually agree to the following:

a. In no event shall City be liable to Redec for special, indirect, or consequential damages, except those caused by City's gross negligence or willful or wanton misconduct arising out of or in any way connected with a breach of this Agreement. The maximum liability of City shall be limited to the amount of money to be paid or received by City under this Agreement.

b. Redec shall defend, indemnify, and hold harmless City, its elected officials, agents, and employees from and against any and all liability, suits, damages, costs (including attorney's fees), losses, outlays and expenses, from claims arising out of or relating in any way to this Agreement, or the work or any subcontract thereunder (Redec hereby assuming full responsibility for relations with subcontractors), including, but not limited to, claims for personal injuries, death, property damage, or for damages from the award of this Agreement to Redec, notwithstanding any alleged negligence on the part of City, its officials, agents, and employees. This provision does not require Redec

to defend, indemnify or hold harmless City for gross negligence or intentional misconduct on the part of City.

c. Redec shall indemnify and hold City harmless from all wages or overtime compensation due and owing to its employees in rendering Services pursuant to this Agreement or any subcontract under this Agreement, including payment of reasonable attorneys' fees and costs in the defense of any claim made under the Fair Labor Standards Act, the Missouri Prevailing Wage Law, or any other federal or state law.

18. **Notices**. All notices required or permitted under this Agreement and required to be in writing may be given by facsimile or by first class mail addressed to City and Redec at the addresses shown above. The date of delivery of any notice given by mail shall be the date falling on the third day after the day of its mailing. The date of delivery of notice by facsimile transmission shall be deemed to be the date transmission occurs, except where the transmission is not completed by 5:00 p.m. on a regular business day at the terminal of the receiving party, in which case the date of delivery shall be deemed to fall on the next regular business day for the receiving party.

19. **Jurisdiction**. This Agreement and every question arising hereunder shall be construed or determined according to the laws of the State of Missouri. Should any part of this Agreement be litigated, venue shall be proper exclusively in the Circuit Court of Greene County, Missouri.

20. **Entire Agreement**. This Agreement contains the entire agreement of the Parties. No modification, amendment, or waiver of any of the provisions of this Agreement shall be effective unless in writing specifically referring hereto, and signed by both Parties.

[***The remainder of this page is intentionally left blank. Signatures follow on page 6 of 6***]

IN WITNESS WHEREOF, the Parties hereto have set their hands and seals on the day and year herein stated.

Redec, LLC

By: _____

_____
Printed Name

_____
Title

Date: _____

THE CITY OF REPUBLIC, MISSOURI

By: _____ **Date:** _____
David Cameron, City Administrator

Attest: _____ **Date:** _____
Laura Burbridge, City Clerk

Approved as to Form:

_____ **Date:** _____
Megan McCullough, City Attorney