# AGENDA | REGULAR TOWN COUNCIL MEETING

March 23, 2021 at 6:00 PM
Council Chamber at Apex Town Hall, 73 Hunter Street

Town Council and Administration

Mayor: Jacques K. Gilbert | Mayor Pro Tem: Nicole L. Dozier
Council Members: Brett D. Gantt; Audra M. Killingsworth; Cheryl F. Stallings; Terry Mahaffey
Interim Town Manager: Ralph Clark | Assistant Town Managers: Shawn Purvis and Marty Stone
Town Clerk: Donna B. Hosch, MMC | Town Attorney: Laurie L. Hohe

## COMMENCEMENT

Call to Order | Invocation | Pledge of Allegiance

## PRESENTATIONS

## CONSENT AGENDA

All Consent Agenda items are considered routine, to be enacted by one motion with the adoption of the Consent Agenda, and without discussion. If a Council Member requests discussion of an item, the item may be removed from the Consent Agenda and considered separately. The Mayor will present the Consent Agenda to be set prior to taking action on the following items:

CN1 Donna Hosch, Town Clerk and Tesa Silver, Deputy Town Clerk

Motion to approve Minutes of the February 23, 2021 Regular Council Meeting, the February 25, 2021 Special Council Meeting, the March 9, 2021 Regular Council Meeting, and the February 11, 2021 Special Council Meeting

CN2 Donna Hosch, Town Clerk

Motion to approve the Apex Tax Report dated 02/01/2021

CN3 Amanda Bunce, Current Planning Manager

Motion to approve the Statement of the Apex Town Council pursuant to G.S. 160D-605(a) addressing action on the Unified Development Ordinance (UDO) Amendment of March 11, 2021.

CN4 Amanda Bunce, Current Planning Manager

Motion to set the Public Hearing for the April 13, 2021 Town Council meeting regarding various amendments to the Unified Development Ordinance.

CN5 Dianne Khin, Director of Planning and Community Development

Motion to adopt a resolution Directing the Town Clerk to Investigate Petition Received, to accept the Certificate of Sufficiency by the Town Clerk and to adopt a Resolution Setting Date of Public Hearing for April 13, 2021 on the Question of Annexation – Apex Town Council's intent to annex Jordan Lutheran Church property containing 6.22 acres located at 1201 Chapel Ridge Road, Annexation #708 into the Town's corporate limits.

CN6 Dianne Khin, Director of Planning and Community Development

Motion to adopt a resolution Directing the Town Clerk to Investigate Petition Received, to accept the Certificate of Sufficiency by the Town Clerk and to adopt a Resolution Setting Date of Public Hearing for April 13, 2021 on the Question of Annexation – Apex Town Council's intent to annex MFW Investments, LLC (portion of PIN #0751 21 6689 located at 0 East Williams Street), Trinity Apex North 100, LLC (portion of PIN #0751 32 3228 located at 5125 Jessie Drive) and Horton Park MF, LLC (portion of PIN #0751 31 9308) located at 5101 Jessie Drive) properties (Horton Park PUD), as recorded in Book of Maps 2021 Pages 128-134 containing ±1.139 acres, Annexation #709 into the Town's corporate limits.

CN7 Megan Pendell, Sustainability Coordinator

Motion to approve Sai Pranathi Sana as a new member on the Environmental Advisory Board (EAB).

CN8 Russell Dalton, Sr. Transportation Engineer

Motion to approve a reimbursement agreement between the Town and NCDOT for construction of TM-0026, bus stops to serve GoApex Route 1, and authorize the Interim Town Manager to execute the same.

CN9 Adam Stephenson, Engineering Supervisor

Motion to approve revisions to the Town Standard Specifications and Details.

CN10 Mary Beth Manville

Motion to approve the authorization of one (1) full-time Housing Program Manager position, salary grade 26, and Budget Amendment 16, to fund associated costs.

## REGULAR MEETING AGENDA

Mayor Gilbert will call for additional Agenda items from Council or Staff and set the Regular Meeting Agenda prior to Council actions.

## PUBLIC FORUM

Public Forum allows the public an opportunity to address the Town Council. The speaker is requested not to address items that appear as Public Hearings scheduled on the Regular Agenda. The Mayor will recognize those who would like to speak at the appropriate time. Large groups are asked to select a representative to speak for the entire group. Comments must be limited to 3 minutes to allow others the opportunity to speak.

PUBLIC HEARINGS

PH1 Shannon Cox, Long Range Planning Manager

Public hearing and possible motion regarding proposed Transportation Plan amendments associated with Rezoning #20CZ12 Felton Grove High School.

PH2 Shelly Mayo, Planner II

Public hearing and possible motion to approve Rezoning Application #20CZ12 Felton Grove High School. The applicant, Wake County Board of Education, seeks to rezone approximately 68.06 acres located at 8550 Stephenson Road from Medium Density Residential-Conditional Zoning (MD-CZ #12CZ14) to Medium Density Residential-Conditional Zoning (MD-CZ).

PH3 Shelly Mayo, Planner II

Public hearing and possible motion to adopt an Ordinance on the Question of Annexation – Apex Town Council's intent to annex Wake County Board of Education (Felton Grove High School) property containing 68.06 acres located at 8550 Stephenson Road, Annexation #700 into the Town's corporate limits.

PH4 Liz Loftin, Senior Planner

Public hearing and possible motion to adopt an Ordinance on the Question of Annexation – Apex Town Council's intent to annex Edwin A. Goodwin, Testamentary Trust/Judy G. Hackney, Trustee (Hackney Tracts) property containing 2.867 acres located at 2600 Olive Chapel Road, Annexation #701 into the Town's corporate limits.

PH5 Liz Loftin, Senior Planner

Public Hearing and possible motion to approve Rezoning Application #20CZ14 Hackney PUD and Ordinance. The applicant, Brendie Vega, WithersRavenel, seeks to rezone approximately 79.79 acres located at 0, 2500, and 2600 Olive Chapel Road (PINs 0721492629, 0722406699, & 0722411102) from Rural Residential (RR) and Wake County R-80W to Planned Unit Development-Conditional Zoning (PUD-CZ).

PH6 Liz Loftin, Senior Planner

Public Hearing and possible motion to approve Rezoning Application #21CZ02 Abbey Spring PUD. The applicant, Isabel Worthy Mattox, Mattox Law Firm, seeks to rezone approximately 5.01 acres located at 0 W. Williams Street (PIN 0742026247) from Planned Unit Development-Conditional Use (PUD-CU #02CU13) to Planned Unit Development-Conditional Zoning (PUD-CZ).

PH7 Amanda Bunce, Current Planning Manager

Public Hearing and possible motion regarding an amendment to the Unified Development Ordinance (UDO) related to variances from the standards of the Watershed Protection Overlay District.

OLD BUSINESS

UNFINISHED BUSINESS

NEW BUSINESS

NB1 Shawn Purvis, Assistant Town Manager

Possible motion to provide financial support to Evergreen Construction Company for the affordable housing project at Abbey Spring in the form of grants from the Affordable Housing Fund for Recreation Fees-in-lieu and a loan for construction contingent upon final project approval

NB2 Joanna Helms, Director

Possible Motion to approve a Development Agreement with The Crown Companies, LLC and to authorize the Town Manager to execute the same.

UPDATES BY TOWN MANAGER

CLOSED SESSION

WORK SESSION

ADJOURNMENT

# | Agenda Item | cover sheet

for consideration by the Apex Town Council

Item Type: CONSENT AGENDA

Meeting Date: March 23, 2021

## Item Details

Presenter(s): Donna Hosch, Town Clerk and Tesa Silver, Deputy Town Clerk

Department(s): Office of the Town Clerk

Requested Motion

Motion to approve Minutes of the February 23, 2021 Regular Council Meeting, the February 25, 2021 Special Council Meeting, the March 9, 2021 Regular Council Meeting, and the February 11, 2021 Special Council Meeting

Approval Recommended?

Yes

Item Details

N/A

Attachments

- February 23, 2021 Minutes
- February 25, 2021 Minutes
- March 9, 2021 Minutes
- March 11, 2021 Minutes

# REGULAR TOWN COUNCIL MEETING

Tuesday, February 23, 2021 at 6:00 PM
~~Council Chamber at Apex Town Hall, 73 Hunter Street~~
THIS WAS A VIRTUAL MEETING

**Council and Administration**

Mayor: Jacques K. Gilbert | Mayor Pro Tem: Nicole L. Dozier
Council Members: Brett D. Gantt; Audra M. Killingsworth; Cheryl F. Stallings; Terry Mahaffey
Interim Town Manager: Ralph clark | Assistant Town Managers: Shawn Purvis and Marty Stone
Town Clerk: Donna B. Hosch, MMC | Town Attorney: Laurie L. Hohe

In attendance were Mayor Jacques K. Gilbert, Mayor Pro Tem Nicole L. Dozier, and Council Members Audra M. Killingsworth, Brett D. Gantt, Terry Mahaffey, and Cheryl F. Stallings. Also in attendance were Interim Town Manager Ralph Clark, Assistant Town Managers Shawn Purvis and Marty Stone, Town Clerk Donna B. Hosch, Town Attorney Laurie L. Hohe, and Deputy Town Clerk Tesa Silver.

## COMMENCEMENT

Mayor Gilbert called the meeting to order and called roll call for attendance. Mayor Gilbert read a statement on diversity and inclusion as it relates to religious beliefs. He asked for a moment of silence for those who have passed from COVID-19 and for those facing hardship in Texas. Mayor Gilbert led the Pledge of Allegiance.

## PRESENTATIONS

PR1 Mayor Jacques Gilbert and the Apex Town Council
Proclamation recognizing John M. Brown for 35 years of service to the Town and people of Apex as Parks, Recreation, & Cultural Resources Director

Mayor Gilbert read and presented the Proclamation recognizing John M. Brown for his service to the Town, and presented John M. Brown with the Governor's Order of the Long Leaf Pine. Director Brown expressed his gratitude for all those who have contributed to his career and the citizens of the Town of Apex. Council thanked Director Brown for his service to the Town, acknowledged his accomplishments during his career, and shared well wishes in his upcoming retirement.

PR2 Mary Beth Manville, Human Resources Director
Presentation announcing the new Town of Apex Retiree Recognition Board.

Staff presented a sample of the Town of Apex Retiree Recognition Board. The board list the names of employees who retired from the Town with a minimum of 5 years of service. The board will be displayed in Town Hall.

PR3 Jacques Gilbert, Mayor
Presentation of Women's History Month Proclamation

Mayor Gilbert and Town Council read the Proclamation declaring the month of March Women's History Month.

CONSENT AGENDA

CN1 Donna Hosch, Town Clerk and Tesa Silver, Deputy Town Clerk
Motion to approve Council Meeting Minutes

CN2 Terry Mahaffey, Council Member
Motion to adopt a Resolution supporting the Energy Innovation and Carbon Dividend Act

CN3 Dianne Khin, Director of Planning and Community Development
Motion to adopt a Resolution Directing the Town Clerk to Investigate Petition Received, to accept the Certificate of Sufficiency by the Town Clerk, and to adopt a Resolution Setting Date of Public Hearing for March 9, 2021 on the Question of Annexation – Apex Town Council's intent to annex Lufkin Leased Fee, LLC (3050 Lufkin Road) property containing 3.33 acres located at 3050 Lufkin Road, Annexation #707 into the Town's corporate limits.

CN4 Mary Beth Manville, Human Resources Director
Motion to approve the addition of one Diversity Officer position, salary Grade 27, for the Administration Department.

CN5 Marty Stone – Assistant Town Manager
Motion to approve an encroachment agreement between the Town and Daniel Gerard O'Sullivan and wife Kyra Lynn O'Sullivan to install a fence of which 330 S.F. will encroach onto the Town's 20' wide Public Utility Easement and authorize the Town Manager to execute the same.

CN6 Marty Stone – Assistant Town Manager
Motion to approve an encroachment agreement between the Town and William David Paxton and wife Vicki Thomas Paxton to install 100 S.F. and 84 S.F of fence

and 78 S.F. of stairs that will encroach onto the Town's 30'Sanitary Sewer Easement and authorize the Town Manager to execute the same.

CN7 Marty Stone, Assistant Town Manager and Vance Holloman, Finance Director
Motion to approve Budget Ordinance Amendment No. 12 appropriating funds for the purpose of reimbursing a developer for completion of the Reliance Avenue Extension connecting to the Meridian at Ten Ten Apartment Complex.

CN8 Keith McGee, Fire Chief
Motion to approve Town Manager to sign an amendment to the Fire Protection Agreement Apex and a Business Associate Agreement that are required for Apex Fire Department to provide assistance at the mass vaccination site hosted by Wake County.

CN9 Russell Dalton – Sr Transportation Engineer
Motion to approve a reimbursement agreement between the Town and NCDOT for construction of EB-6046, West Chatham St Sidewalk, and authorize the Town Manager to execute the same.

CN10 Michael Deaton, Water Resources Director
Motion to approve revisions to the Policy Regarding Town Participation in Utility Projects.

CN11 Michael Deaton, Water Resources Director
Motion to approve a Utility Infrastructure Reimbursement Agreement with MFW Investments, LLC, and to authorize the Town Manager the same for construction of the Middle Creek Regional Pump Station 2 and associated gravity sewer and force main infrastructure.

CN12 Colleen Merays, Downtown & Small Business Development Coordinator
Motion to close up to 13 on-street parallel parking spaces along N. Salem Street from Center St. to Chatham St. to allow for extended outdoor dining and alcohol consumption as permitted by ABC Law or regulations, and to approve an ordinance temporarily modifying Town Code Sections 14-14 and 18-11 as they relate to sidewalk dining and alcohol consumption on public streets and sidewalks through May 31, 2021.

CN13 Steve Adams, Utility Acquisition Specialist
Motion to approve purchase of +/- 5 acres located at 736 Hunter Street for $467,000, to grant authority to the Interim Town Manager to execute the contract and authority to the Interim Town Manager and Finance Director to execute all closing documents on behalf of the Town, and to approve Budget Ordinance Amendment 13.

CN14 Megan Pendell, Sustainability Coordinator
Motion to approve amendments to Apex Town Code section 2-58 in regards to membership on the Environmental Advisory Board.

CN15 Russell Dalton – Sr Transportation Engineer

Motion to approve a 2nd supplemental reimbursement agreement between the Town and NCDOT for construction of U-5537, Lake Pine Drive Improvements, and authorize the Town Manager to execute the same.

CN16 Amanda Grogan, Budget & Management Analyst
Motion to approve Budget Ordinance Amendment No. 14 to account for COVID expense reimbursements and distribution of those funds to department budgets and to allocate fund balance to cover additional onboarding and personnel costs

Mayor Gilbert corrected the date in Consent Agenda Item 12. Council Member Killingsworth stated that the language in Consent Agenda Item 4 is now gender neutral.

Mayor Gilbert called for a motion to adopt the Consent Agenda.
Council Member Stallings made the motion with the stated changes;
Council Member Killingsworth seconded the motion.
The motion carried by a 5-0 roll call vote.

REGULAR MEETING AGENDA

Mayor Gilbert called for a motion to adopt the Regular Agenda.
Council Member Gantt made the motion;
Council Member Killingsworth seconded the motion.
The motion carried by a 5-0 roll call vote.

PUBLIC FORUM

Carol Ferguson, Dan and Karen Willis, Jay Smith, and Micky and Peggy Smith; congratulated Parks, Recreation and Cultural Resources Director John M. Brown well wishes on his retirement.

Marcellus Howard; asked if some of the tennis courts at Apex Nature Park and Kelly Road Park could be repurposed as pickleball courts.

Lori Nelson; expressed concern over the state of the Apex Police Department. She asked for action to continue to be taken by the Mayor, Town Council and the Interim Police Chief, and that a citizen review board be created to address some of the issues that the Police Department is facing.

Carla Gregg-Kerns, Darlene Oglesby, Jessica Matthews, Kevin Nelson, Ross Pierson, Stephanie Mitchell, and Reid Pierson, S. Peoples; stated that they stood with Lori Nelson

and the call for police reform in Apex based on the Apex Police Department Cultural Assessment.

PUBLIC HEARINGS

PH1 Shannon Cox, Long Range Planning Manager

Possible motion to continue the public hearing for proposed Transportation Plan amendments associated with Rezoning Application #20CZ12 Felton Grove High School. Due to the Planning Board continuing their vote from February 10, 2021 to March 8, 2021 and the fact that 30 days will not have passed from the date of the first Planning Board public hearing, this item will not be heard by Town Council at this time, so a continuance of the Town Council public hearing to March 23, 2021 is requested.

AND

PH2 Shelly Mayo, Planner II

Possible motion to continue the public hearing for Rezoning Application #20CZ12 Felton Grove High School. The applicant, Wake County Board of Education, seeks to rezone approximately 60.68 acres located at 8550 Stephenson Road from Medium Density Residential-Conditional Zoning (MD-CZ #12CZ14) to Medium Density Residential-Conditional Zoning (MD-CZ). Due to the Planning Board continuing their public hearing from February 10, 2021 to March 8, 2021 and the fact that 30 days will not have passed from the date of the first Planning Board public hearing, this item will not be heard by Town Council at this time, so a continuance of the Town Council public hearing to March 23, 2021 is requested.

AND

PH3 Shelly Mayo, Planner II

Public hearing and possible motion to adopt an Ordinance on the Question of Annexation – Apex Town Council's intent to annex Wake County Board of Education (Felton Grove High School) property containing 68.06 acres located at 8550 Stephenson Road, Annexation #700 into the Town's corporate limits. **The applicant requests this item be continued to the March 23, 2021 meeting.**

Mayor Gilbert called for a motion to continue Public Hearing 1, 2, and 3 until the March 23, 2021 regular scheduled meeting. Council Member Gantt made the motion;
Council Member Killingsworth seconded the motion.
The motion carried by a 5-0 roll call vote.

PH4 Lauren Staudenmaier, Planner I

Public hearing and possible motion to adopt an Ordinance on the Question of Annexation – Apex Town Council's intent to annex Joseph D. Cusumano and Reagan

L. Cusumano property containing 1.914 acres located at 2609 New Hill Olive Chapel Road, Annexation #705 into the Town's corporate limits.

AND

PH5 Lauren Staudenmaier, Planner I

Public Hearing and possible motion to approve Rezoning Application #20CZ16 Cusumano Property and Ordinance. The applicant, Joseph D. Cusumano, seeks to rezone approximately 1.90 acres for the property located at 2609 New Hill Olive Chapel Road (PIN 0710847078), from Wake County Residential-40W (R-40W) to Medium Density-Conditional Zoning (MD-CZ).

Staff oriented Council to the site and stated the applicant's proposal for rezoning. The Environmental Advisory Board has reviewed the application and did not recommend any additional zoning conditions. The rezoning is consistent with the 2045 Land Use Plan and it is compatible with the existing area. The Planning Board recommended approval. Staff recommended approval.

Mayor Gilbert declared the Public Hearing Opened. There were no comments. Mayor Gilbert declared the Public Hearing Closed. Mayor Gilbert stated that no action would be taken and that a vote would be held at the meeting scheduled for Thursday, February 25, 2021 at 4:00 pm.

PH6 Sarah Van Every, Senior Planner

Public Hearing and possible motion to approve Rezoning Application #21CZ01 Wolfe Properties PUD Amendment. The applicant Josh Swindell, Envision Homes, LLC., seeks to rezone approximately 43.52 acres located at 1405, 1409, 1209, & 1401 Wimberly Road and 1012 & 1000 Double Helix Road (PINs 0722595328, 0722598851, 0723406397, 0723504154, 0723508938, & 0723601654) from Planned Unit Development-Conditional Zoning (PUD-CZ #19CZ22) to Planned Unit Development-Conditional Zoning (PUD-CZ).

Staff oriented Council to the site, stated the applicant's proposal for rezoning and explained the PUD Amendment. The Planning Board recommended approval. Staff recommended approval.

Mayor Gilbert declared the Public Hearing Opened.

John Shell; asked several questions related to the White Oak Site Plan.

Mayor Gilbert declared the Public Hearing Closed. Mayor Gilbert stated that no action would be taken and that a vote would be held at the meeting scheduled for Thursday, February 25, 2021 at 4:00 pm.

PH7 Shannon Cox, Long Range Planning Manager
Public hearing and possible motion regarding proposed amendments to the 2045 Land Use Map related to transit-oriented development.

Staff oriented Council to the amendments, and provided public feedback on the amendments. Staff provided updated recommendations to the 2045 Land Use Map. The Planning Board recommended approval.

Mayor Gilbert declared the Public Hearing Opened.

Sarah Sleight and Peter Muecke; asked that Council deny the proposed amendment of the lot at 0 W. Williams Street due to the lot's unique topography, the surrounding infrastructure and housing, and the stream.

Mayor Gilbert declared the Public Hearing Closed. Mayor Gilbert stated that no action would be taken and that a vote would be held at the meeting scheduled for Thursday, February 25, 2021 at 4:00 PM

## OLD BUSINESS

There was no Old business.

## UNFINISHED BUSINESS

UB1 Russell Dalton, Sr. Transportation Engineer
Possible Motion to recommend modifying Jessie Drive Phase 1 final design plans to remove the proposed U-turn bulb-out and include the Sweetgum Access Alternative while keeping Sweetgum Drive connected to Jessie Drive as a right-in/right-out access as presented; and, Possible Motion to recommend continuing the 10-foot side path westward along the north side of Jessie Drive in the Phase 1 final design plans to the intersection at future Production Drive/Horton Park Drive.

Staff reviewed the design plan for modifying Jessie Drive Phase 1 and the various options that have been considered. Staff summarized the public comments received after the Public Hearing.

Nate Nicholes; agreed with the new connector road to provide left turns versus U-turn, but he was against the proposed connector route. He favored pursuing a connector route south of the pipeline.

Amy Marshall; against the proposed connector route and cited request for traffic signal at Ten Ten Road. She cited concerns with any restrictions to existing Sweetgum Drive residents and emergency access. She suggested the use of 4801 Jessie Drive for a roundabout or turnaround leaving Sweetgum Drive access as is.

Elizabeth Farquhar and Zach Wienandt; opposed to the Jessie Drive project and cited concerns with access, environmental impact and home values due to Jessie Drive project.

Brian Bradley; cited concern with any restriction to existing Sweetgum Drive and requested a traffic signal at Ten Ten Road. He suggested a connector route directly parallel to the west side of the pipeline.

Rebecca Mitchell; against the proposed connector route and cited request for a traffic signal at Ten Ten Road. She was in favor of new access to Sweetgum Drive and suggested the route west of the pipeline.

Brent Cadd; proposed alignment east of the pipeline on Jessie Drive that would curve behind 2512 and 2528 Sweetgum Drive and asked for further evaluation based on the proposed suggestion.

Nicholas Ward; suggested a connector to Ten Ten Road be reconsidered, if it could provide long term left turn (turn in) and right turn (turn out) access to Sweetgum Drive. He was not in favor of direct impacts to any portion of the parcel located at 2528 Sweetgum Drive.

Donna Provance; requested further evaluation time to consider all options and was not in favor of impacts to the primary or secondary well.

Brian Dean; was in favor of new access to Sweetgum Drive and suggested the route west of the pipeline crossing the pipeline south of the house located at 2528 Sweetgum Drive.

Staff addressed the multiple obstacles the Town faced with the various options that could completed at Jessie Drive, and recommended the U-turn bulb if Council is opposed to the connector route.

Council Member Mahaffey made the motion to decline to build the side path to the north of Jessie Drive; Council Member Killingsworth seconded. The motion carried by a 5-0 vote by roll call.

Council Member Mahaffey made the motion to direct staff to continue with the bulb out option and to further direct staff to consider transportation plan updates considering the lots for provide further connectivity to Sweetgum Drive; Council Member Gantt seconded. The motion carried by a 5-0 vote by roll call.

NEW BUSINESS

NB1 Mayor Jacques Gilbert and the Apex Council
Possible motion to consider renaming the Apex Community Center to the John M. Brown Community Center

Mayor Gilbert read a Resolution recognizing the many contributions of Parks, Recreation, and Cultural Resources Director John M. Brown and his community involvement.

Council Member Killingsworth made the motion to adopt the Resolution to rename the Apex Community Center as the John M. Brown Community Center; Council Member Stallings seconded. The motion carried by a 5-0 vote by roll call.

NB2 Colleen Merays, Downtown & Small Business Coordinator
Motion to approve the Special Event Permit requests and Town Co-Sponsorship requests for 2021 and 2022.

Staff reviewed Special Event Permit application requests the Town has received. Applications have been submitted for the farmers market, Music Festival and Peak Festival.

Council Member Killingsworth made the motion to approve; Mayor Pro Tem Dozier seconded. The motion carried by a 5-0 vote by roll call.

NB3 Vance Holloman, Finance Director

Consider information and data presented by Finance staff to provide direction to finalize the development of a utility customer assistance program

The Town suspended disconnections due to the Governor's Orders and has established payment plans for those who would be in jeopardy of their services being disconnected. Western Wake Ministry Crisis has assisted in establishing criteria for the assistance program. Staff reviewed the eligibility requirements. Staff will be directed to not turn off anyone who has applied for assistance until eligibility to participate in the program has been determined. Staff recommended to allow suspension to be lifted as of February 28, 2021, with no cutoffs the month of March and for cutoffs to begin with the April billing cycle.

Council agreed with the assistance program, but stated that they did not want to cut people off during the pandemic.

Council Member Killingsworth made the motion to extend the moratorium until May 31, 2021; Mayor Pro Tem Dozier seconded. The motion carried by a 5-0 vote by roll call.

NB4 Terry Mahaffey, Council Member

Discussion and the setting of municipal election filing fees for the Town

Council Member Mahaffey stated that the Council has the authority to set filing fees for office and asked if Council should consider adjusting the fees. He stated that he doesn't believe the fee should be tied to compensation.

Council Member Mahaffey made the motion to have staff prepare an ordinance to set the filing fees to $50 for Council and $75 for the Mayor, and report to the Board of Elections; Council Member Killingsworth seconded. The motion carried by a 5-0 vote by roll call.

## PRESENTATION BY TOWN MANAGER

Interim Manager Clark stated that a process should be created to streamline citizen complaints and that he received all departmental reports.

## CLOSED SESSION

CS1 Laurie Hohe, Town Attorney

Possible motion to go into closed session to consult with the Town Attorney pursuant to NCGS 143-318.11(a)(3) and discuss a personnel matter pursuant to NCGS 143-318.11(a)(6).

Council Member Killingsworth made the motion to go into Closed Session; Council Member Mahaffey seconded. The motion carried by a 5-0 vote by roll call.

WORK SESSION

There was no Work Session

ADJOURNMENT

With there being no further business and without objection from Council, Mayor Gilbert adjourned the meeting.

_____
Tesa Silver CMC, NCCMC
Deputy Town Clerk

ATTEST:

_____
Jacques K. Gilbert, Mayor

This page left blank intentionally.

# SPECIAL TOWN COUNCIL MEETING

Tuesday, February 25, 2021 at 4:00 PM
~~Council Chamber at Apex Town Hall, 73 Hunter Street~~
THIS WAS A VIRTUAL MEETING

**Council and Administration**

Mayor: Jacques K. Gilbert | Mayor Pro Tem: Nicole L. Dozier
Council Members: Brett D. Gantt; Audra M. Killingsworth; Cheryl F. Stallings; Terry Mahaffey
Town Manager: Drew Havens | Assistant Town Managers: Shawn Purvis and Marty Stone
Town Clerk: Donna B. Hosch, MMC | Town Attorney: Laurie L. Hohe

In attendance were Mayor Jacques K. Gilbert, Mayor Pro Tem Nicole L. Dozier, and Council Members Audra M. Killingsworth, Brett D. Gantt, Terry Mahaffey, and Cheryl F. Stallings. Also in attendance were Assistant Town Manager Shawn Purvis, Town Clerk Donna B. Hosch, Town Attorney Laurie L. Hohe, and Deputy Town Clerk Tesa Silver.

## COMMENCEMENT

Mayor Gilbert called the meeting to order and called roll call for attendance.

## PUBLIC HEARINGS

PH4 Lauren Staudenmaier, Planner I

Public hearing and possible motion to adopt an Ordinance on the Question of Annexation – Apex Town Council's intent to annex Joseph D. Cusumano and Reagan L. Cusumano property containing 1.914 acres located at 2609 New Hill Olive Chapel Road, Annexation #705 into the Town's corporate limits.

AND

PH5 Lauren Staudenmaier, Planner I

Public Hearing and possible motion to approve Rezoning Application #20CZ16 Cusumano Property and Ordinance. The applicant, Joseph D. Cusumano, seeks to rezone approximately 1.90 acres for the property located at 2609 New Hill Olive Chapel Road (PIN 0710847078), from Wake County Residential-40W (R-40W) to Medium Density-Conditional Zoning (MD-CZ).

Mayor Gilbert declared the Public Hearing Opened. There were no additional comments submitted. Mayor Gilbert declared the Public Hearing Closed.

Council Member Killingsworth made the motion to approve; Council Member Mahaffey seconded. The motion carried by a 5-0 vote by roll call.

PH6 Sarah Van Every, Senior Planner

Public Hearing and possible motion to approve Rezoning Application #21CZ01 Wolfe Properties PUD Amendment. The applicant Josh Swindell, Envision Homes, LLC., seeks to rezone approximately 43.52 acres located at 1405, 1409, 1209, & 1401 Wimberly Road and 1012 & 1000 Double Helix Road (PINs 0722595328, 0722598851, 0723406397, 0723504154, 0723508938, & 0723601654) from Planned Unit Development-Conditional Zoning (PUD-CZ #19CZ22) to Planned Unit Development-Conditional Zoning (PUD-CZ).

Staff provided a brief overview of the rezoning application. Mayor Gilbert declared the Public Hearing Opened. There were no additional comments submitted. Mayor Gilbert declared the Public Hearing Closed.

Council Member Mahaffey made the motion to approve; Council Member Gantt seconded. The motion carried by a 5-0 vote by roll call.

PH7 Shannon Cox, Long Range Planning Manager

Public hearing and possible motion regarding proposed amendments to the 2045 Land Use Map related to transit-oriented development.

Staff provided a brief overview of the areas included in the 2045 Land Use Map that had been widely questioned. Council discussed how to proceed with these areas based on the feedback received from citizens.

Council Member Mahaffey made the motion to approve areas A, B, C, and E as presented; Council Member Killingsworth seconded. The motion carried by a 5-0 vote by roll call.

Council Member Gantt made the motion to approve D as presented; Council Member Mahaffey seconded. The motion carried by a 3-2 vote by roll call; Council Members Killingworth, Gantt, and Mahaffey voted in the affirmative and Mayor Pro Tem Dozier and Council Member Stallings voted against.

Council Member Mahaffey made the motion to approve the four parcels labeled A as presented and the remainder to go back to the Planning Committee for further reconsideration; Council Member Killingsworth seconded. The motion carried by a 4-1 vote by roll call. Mayor Pro Tem Dozier and Council Members Killingsworth, Stallings, and Mahaffey voted in the affirmative and Council Member Gantt voted against.

ADJOURNMENT

With there being no further business and without objection from Council, Mayor Gilbert adjourned the meeting.

_____
Tesa Silver CMC, NCCMC
Deputy Town Clerk

ATTEST:

_____
Jacques K. Gilbert, Mayor

This page left blank intentionally.

# | REGULAR TOWN COUNCIL MEETING

March 09, 2021 at 6:00 PM
~~Council Chamber at Apex Town Hall, 73 Hunter Street~~
THIS WAS HELD AS A VIRTUAL MEETING

Town Council and Administration
Mayor: Jacques K. Gilbert | Mayor Pro Tem: Nicole L. Dozier
Council Members: Brett D. Gantt; Audra M. Killingsworth; Cheryl F. Stallings; and Terry Mahaffey
Interim Town Manager: Ralph Clark | Assistant Town Managers: Shawn Purvis and Marty Stone
Town Clerk: Donna B. Hosch, MMC | Town Attorney: Laurie L. Hohe

In attendance were Mayor Jacques K. Gilbert, Mayor Pro Tem Nicole L. Dozier, and Council Members Audra M. Killingsworth, Brett D. Gantt, Terry Mahaffey, and Cheryl F. Stallings. Also in attendance were Interim Town Manager Ralph Clark, Assistant Town Managers Shawn Purvis and Marty Stone, Town Clerk Donna B. Hosch, and Town Attorney Laurie L. Hohe

## COMMENCEMENT

Mayor Gilbert called the meeting to order and called Council Member roll call. Mayor Gilbert recognized National Women's Day and stated celebration of those who have transitioned and not able to be with us. He called for a moment of silence in honor of these women after which he led the Pledge of Allegiance.

## PRESENTATIONS

PR1 Jason Morado, Senior Project Manager, ETC
Presentation of citizen satisfaction survey results

Communications Manager Stacie Galloway stated the results of the survey were posted to the website this afternoon and would be posted to social media. Mr. Morado explained the purpose and specialization of his firm. This was the second survey they had done for Apex.

Mr. Morado explained the purpose of such a survey which was to identify and measure priorities, trends, performance, and the ability to objectively assess citizen satisfaction. He explained their methodology, stating that 523 surveys had been completed which far exceeded their goal of 400. There was a good distribution throughout the Town, the demographics reflecting the Town's actual population.

Residents had a very positive perception of the Town. They thought the Town was moving in the right direction, and satisfaction with Town services was much higher than in other communities. Mr. Morado stated the top overall community priorities were managing growth and development, traffic, and maintenance of streets and sidewalks.

According to the ratings, Apex rated very satisfied to satisfied with very few residents being dissatisfied with overall qualities. There has been an improvement in the overall quality categories over three years ago. Most residents felt Apex a safe place to live, even at night.

Mr. Morado spoke about trends, noting the notable satisfaction increases since 2017. He presented how Apex rates higher than the Atlantic Region and US. As far as perceptions, Apex rates higher than the latter. Town leadership almost doubled the regional and national average. Overall, customer service was rated very high.

The overall priority ratings increased since last time in several categories. The findings for the current pace of development was presented. Mr. Morado stated Apex is setting the standard in a lot of different categories.

Responding to Council, Mr. Morado stated the survey responses were collected in December 2020 and January 2021. Overall, our results are better than normal. He defined what states are included in the Atlantic Region.

The Mayor recognized staff and leadership for keeping things moving forward.

PR2 Roy Jones, CEO ElectriCities
Presentation of the 2020 Public Power Award of Excellence in the areas of Grid Modernization and Workforce Development

Mr. Jones stated how his organization identifies what power communities are truly leaders in the community. He gave brief background on his organization and appreciated the invaluable input and perspective of those staff who sit in on their meetings.

He stated what grid modernization encompasses and stated the two things Apex did to plan for the future and our being able to identify and remediate power outages quickly. As for workforce development, Apex is doing a fantastic job in this area. Mr. Jones complimented what we are doing in cooperation with the schools. Apex continues to train its professional linemen throughout their careers. The journeyman program takes about eight years from entry level to line worker, and Apex offers the training and opportunity to advance and provides pay increases.

CONSENT AGENDA

CN1 Donna Hosch, Town Clerk

Minutes of the February 9, 2021 Regular Council Meeting

CN2 Tesa Silver, Deputy Town Clerk

Minutes of the February 12, 2021 Regular CouncilMeeting, the February 15, 2021 Special Council Meeting, and the February 17, 2021 Special Council Meeting

CN3 Donna Hosch, Town Clerk

Apex Tax Report dated January 5, 2021

CN4 Council Member Terry Mahaffey

Ordinance amending Section 2.2 of the Code of Ordinances in reference to the Town's municipal filing fees

CN5 Liz Loftin, Senior Planner

Resolution Directing the Town Clerk to Investigate Petition Received, Certificate of Sufficiency by the Town Clerk, and Resolution Setting Date of Public Hearing for March 23, 2021 on the Question of Annexation – Apex Town Council's intent to annex Edwin A. Goodwin, Testamentary Trust/Judy G. Hackney, Trustee (Hackney Tracts) property containing 2.867 acres located at 2600 Olive Chapel Road, Annexation #701 into the Town's corporate limits

CN6 Lauren Staudenmaier, Planner I

Statement of the Town Council for Rezoning Case #20CZ16, Joseph D. Cusumano, petitioner, for the property located on 2609 New Hill Olive Chapel Road

CN7 Sarah Van Every, Senior Planner

Statement of the Town Council and Ordinance for Rezoning Case #21CZ01 Wolfe Properties PUD Amendment, Josh Swindell, Envision Homes, LLC. petitioner, for the properties located on 1405, 1409, 1209, & 1401 Wimberly Road and 1012 & 1000 Double Helix Road

CN8 Liz Loftin, Senior Planner

Set Public Hearing for the March 23, 2021 Town Council meeting regarding Rezoning Application #20CZ14 Hackney PUD and Ordinance. The applicant, Brendie Vega, WithersRavenel, seeks to rezone approximately 79.79 acres located at 0, 2500, and 2600 Olive Chapel Rd (PINs 0721492629, 0722406699, & 0722411102) from Rural Residential (RR) and Wake County R-80W to Planned Unit Development-Conditional Zoning (PUD-CZ)

CN9 Liz Loftin, Senior Planner

Set Public Hearing for the March 23, 2021 Town Council meeting regarding Rezoning Application #21CZ02 Abbey Spring PUD. The applicant, Isabel Worthy Mattox, Mattox Law Firm, seeks to rezone approximately 5.01 acres located at 0 W. Williams Street (PIN 0742026247) from Planned Unit Development-Conditional Use (PUD-CU #02CU13) to Planned Unit Development-Conditional Zoning (PUD-CZ)

CN10 Amanda Bunce, Current Planning Manager
Set the Public Hearing for the March 23, 2021 Town Council meeting regarding amendments to the Unified Development Ordinance related to variance standards in the Watershed Protection Overlay Districts

CN11 Marty Stone – Assistant Town Manager
Encroachment agreement between the Town and property owner Bond Building & Design, Inc. to install 75 S.F. of private driveway that will encroach onto the Town's 20'Public Utility Drainage Easement and authorize the Town Manager to execute the same

CN12 Vance Holloman, Finance Director
Contract for audit services for the fiscal year ending June 30, 2021 with Cherry Bekaert LLP of Raleigh, North Carolina

CN13 Vance Holloman, Finance Director and Michael Deaton, Water Resources Director
Budget Ordinance Amendment No. 15 appropriating funds for the purpose of reimbursing the developer of Children's Lighthouse Daycare located at 2001 Apex Peakway. This reimbursement was in accordance with a December 2011 agreement executed by the Town of Apex, Brookfield Properties, LLC (Brookfield), and Vineyard Development, LLC (Vineyard)

CN14 Mary Beth Manville, Human Resources Director
Addition of one full-time equivalent Recreation Customer Service Specialist, salary grade 15, to staff the Senior Center

CN15 Vance Holloman, Finance Officer
Temporary Ordinance Modifications extending the current suspension of utility disconnections and application of penalties and fees for unpaid utility balances

Mayor Gilbert called for a motion to adopt the Consent Agenda. Council Member Stallings made the motion; Council Member Mahaffey seconded the motion. The motion carried by a 5-0 roll call vote.

## REGULAR MEETING AGENDA

Mayor Gilbert called for a motion to adopt the Regular Agenda. Council Member Gantt made the motion; Council Member Mahaffey seconded the motion. The motion carried by a 5-0 roll call vote.

## PUBLIC FORUM

Mayor Gilbert stated there were two recorded public comments to be heard. Due to technical issues, Mayor Gilbert stated these two comments would be heard later in the meeting.

PUBLIC HEARINGS

PH1 Dianne Khin, Director of Planning and Community Development
Ordinance on the Question of Annexation – Apex Town Council's intent to annex Lufkin Leased Fee, LLC (3050 Lufkin Road) property containing 3.33 acres located at 3050 Lufkin Road, Annexation #707 into the Town's corporate limits

Staff oriented Council to the site and stated that staff recommended approval.

Staff answered Council questions on when this property was rezoned and its current zoning.

Mayor Gilbert declared the Public Hearing open. With no public comments being received, Mayor Gilbert declared the Public hearing closed. Mayor Gilbert stated voting on this matter would take place at a Special Council Meeting on March 11, 2021 at 5:00 p.m.

PH2 Amanda Bunce, Current Planning Manager
Amendment to the Unified Development Ordinance related to Resource Conservation Area in North Carolina Certified Sites

Staff oriented Council to the site and explained the requested amendments. Planning Board and staff recommended approval.

Mayor Gilbert declared the Public Hearing open. With no public comments being received, Mayor Gilbert declared the Public hearing closed. Mayor Gilbert stated voting on this matter would take place at a Special Council Meeting on March 11, 2021 at 5:00 p.m.

PH3 Shannon Cox, Long Range Planning Manager
Proposed amendments to the Thoroughfare and Collector Street Plan map related to the site known as Cash Corporate Center, south of Production Drive and Burma Drive and north of Pristine Water Drive

Staff oriented Council to the site and explained the requested amendments.

Responding to Council, staff answered questions related to connectivity.

Mayor Gilbert declared the Public Hearing open. With no public comments being received, Mayor Gilbert declared the Public hearing closed. Mayor Gilbert stated voting on this matter would take place at a Special Council Meeting on March 11, 2021 at 5:00 p.m.

PH4 Shannon Cox, Long Range Planning Manager
Proposed amendments to the Thoroughfare and Collector Street Plan map along and in the vicinity of New Hill Olive Chapel Road near Old US 1 Highway

Staff oriented Council to the site and explained the requested amendments. Staff recommended Alternative 1 as did the Planning Board.

Responding to Council, staff answered questions about density as it related to traffic.

Mayor Gilbert declared the Public Hearing open.

Staff read received comments from Kaitlan Hatcher, Elizabeth Moore, Patty W. McKever, and Joseph McKever, II, all supporting Alternative 1.

Mayor Gilbert declared the Public hearing closed.

Responding to Council, staff spoke about traffic studies and future and current roads, stating that we are looking at long-term plans.

Mayor Gilbert stated voting on this matter would take place at a Special Council Meeting on March 11, 2021 at 5:00 p.m.

## OLD BUSINESS

There were no Old Business items for consideration.

## UNFINISHED BUSINESS

UB1 Jenna Shouse, Long Range Planner II & John Bosio, MERJE

Updates on the Town of Apex Wayfinding Signage Program, including public input received on the gateway design options and updates made to the sign designs; and request any input from Town Council in order to finalize the Wayfinding sign design package.

Staff stated this would be the last update; the next move would be to the technical documentation portion of the project. She provided overviews on the gateway, additional design updates, and the sign design package. There was public engagement, staff stating the various options that were presented to the public.

Responding to Council, staff spoke about the bridge sign which is in the preliminary stage. We are working to see if we can obtain approval for this from DOT. Council was pleased with what was presented but had concerns about the bridge sign being too simple. Mr. Bosio explained how the digital component of the parking signs would work. We would start

with static, and the signs would be designed to accommodate digital later. This would also apply for the kiosk.

Responding to Council, conversation ensued about the placement of the "A" logo on the signage. Council and the Mayor thanked staff for their efforts.

Consensus of Council was for staff to move forward with this project.

NEW BUSINESS

NB1 Shelly Mayo, Planner II

Revisions to the Design and Development Manual Native and Adaptive Plant List

Staff oriented Council to the updates of the plant list, planting details, site details, and architectural recommendations for the Small Town Character Overlay District. The plant list was not intended to be all inclusive. Consideration would be given to other plants which would do well here.

Staff presented a proposed plant list format which was simplified from the previous list. The Tree Cap Committee, Environmental Advisory Board, and Bee Committee all recommended approval of the proposed list and format. They also suggested listing trees which were bird or pollinator friendly. The Planning Board recommended approval.

Responding to Council, staff clarified consideration was given to pollinators and that the proposed list was general in nature. What was proposed held eco system benefit. Council thanked staff for the effort on this project which was better organized and more useful. There is a great deal of expertise among those involved, and it was good to see the collaboration worked well.

Mayor Gilbert called for a motion. Council Member Killingsworth made the motion to approve the proposed plant list with this being a living document; Council Member Stallings seconded the motion. The motion carried by a 5-0 roll call vote.

NB2 Vance Holloman, Finance Director

Resolution authorizing the filing of an application with the Local Government Commission to issue $42 million of GO Bonds for Street and Sidewalk Improvements

Staff stated the Resolution would allow the Town to begin the issuance of the debt process from its findings and determinations, mainly that there is the need for the bonds for streets

and sidewalks projects. He stated there will be a Public Hearing on the bonds with resulting actions to move forward.

Responding to Council, staff stated that he has not been made aware of a delay in our November elections, but we would not be locked in if the election was not held.

Council asked for the public forum comment from Darren Dexter to be heard. Mr. Dexter asked several questions related to the need for the bonds, other alternatives, projected start and completion dates, the benefit to him and his family, status of prior bonds passed, and how the bonds will be paid for.

Responding to Council, staff stated there will be numerous opportunities for the public to be informed and educated about the bonds prior to the referendum. The Town could release a list of anticipated projects prior to the election.

Mayor Gilbert called for a motion. Council Member Mahaffey made the motion to adopt the Resolution; Council Member Killingsworth seconded the motion. The motion carried by a 5-0 roll call vote.

## PRESENTATION BY TOWN MANAGER

TM1 Ralph Clark, Interim Town Manager

In regard to the upcoming municipal election, staff stated that Raleigh and Cary are having significant problems in data being available to adjust their wards and districts. Other municipalities have stated they would prefer to continue to hold their elections in November. Do we want to continue with November, in which case we would have a choice of time for early voting or no early voting at all. This would cost us approximately $70-$80,000.

Council expressed concern about the level of engagement if Raleigh delays. Maybe everyone should stay on one calendar. It would be a risk going forward if everyone else delays. We should have early voting, but maybe two weeks is a little long.

Council expressed wanting the November date and early voting. Two weeks or less would be fine.

Council stated it would make sense to go with November if that is what others are doing. She wanted early voting but was not sure about the time span without figures in front of her.

ITM Clark clarified that Council consensus was for voting in November, spanning at least two weekends.

Staff explained the roof line on the upcoming Inspections building – it was made to look like a government building. There are no solar panels, but the building is designed to put them in at a later time. It won't be done now because of budget restrictions.

Staff spoke briefly on the following subjects:

- Water flushing which is done every year;
- Departmental reports and capital projects updates and if these were useful to Council;
- COVID vaccine and our making efforts to have employees vaccinated;
- Our installing two charging stations under the NC Phase 1 Volkswagen Mitigation Plan;
- A sewer spill on private property that has been take care of including the proper notices.

Staff was in conversation with Congresswoman Ross. There is a good possibility of being granted earmarks this year for worthy projects. It would be critical for the projects to be started and completed in short order. He thought about affordable housing and the safe sidewalks program. Either would be legitimate to be submitted. The Mayor thought these two projects would be worthy for consideration.

Council wanted to be kept aware of time lines in order to get items together for consideration of the earmarks. She thought putting vaccine information in the utility bills would help with vaccinations, particularly for those who may not have access to technology. Staff stated the latter would be discussed in the next day's staff meeting.

Council stated he felt it would benefit Apex if the S Line of CSX could be bought by the State, even though this may be a regional project.

Council talked about the information from the County being made available to our citizens by any means possible. She felt the earmark program was a wonderful initiative, giving us an opportunity to present those projects important to Apex, including work on the Peakway.

Staff stated the window of opportunity on the earmarks is very, very tight. We should know by early next week what money would be available and what the process would be. The emphasis will be on getting the money out and moving. Staff thought the two identified projects would fit, and he would speak with staff the following day about getting a package together for approval.

Mayor Gilbert asked for the second Public Forum comment to be played. Carolina Gill addressed the reports submitted by the consulting firm about the police department. She expressed her dissatisfaction with how situations are handled and provided figures on how many officers have died in the line of duty and because of suicide. What are we doing to help officers with these intentions? She expressed concerns about the vetting process of the consulting firm and made comments about racism.

Mayor Gilbert stated he was proud of the Council and everything it was doing. He acknowledged, especially in light of Women's History Month, the women on the Council how much he enjoyed serving with them – Mayor Pro Tem Nicole Dozier and Council Members Killingsworth and Stallings. He acknowledged staff as well.

## CLOSED SESSION

There were no Closed Session items for consideration.

## WORK SESSION

There were no Work Session items for consideration.

## ADJOURNMENT

With no further business and without objection from Council, Mayor Gilbert adjourned the meeting.

_____
Donna B. Hosch, MMC, Town Clerk

ATTEST:

_____
Jacques K. Gilbert, Mayor

# | SPECIAL TOWN COUNCIL MEETING

March 11, 2021 at 5:00 PM
~~Council Chamber at Apex Town Hall, 73 Hunter Street~~
THIS WAS HELD AS A VIRTUAL MEETING

Town Council and Administration
Mayor: Jacques K. Gilbert | Mayor Pro Tem: Nicole L. Dozier
Council Members: Brett D. Gantt; Audra M. Killingsworth; Cheryl F. Stallings; and Terry Mahaffey
Interim Town Manager: Ralph Clark | Assistant Town Managers: Shawn Purvis and Marty Stone
Town Clerk: Donna B. Hosch, MMC | Town Attorney: Laurie L. Hohe

In attendance were Mayor Jacques K. Gilbert, Mayor Pro Tem Nicole L. Dozier, and Council Members Audra M. Killingsworth, Brett D. Gantt, Terry Mahaffey, and Cheryl F. Stallings. Also in attendance were Interim Town Manager Ralph Clark, Assistant Town Managers Shawn Purvis and Marty Stone, Town Clerk Donna B. Hosch, and Town Attorney Laurie L. Hohe

## COMMENCEMENT

Mayor Gilbert called the meeting to order and stated the purpose of the meeting was to vote on the Public Hearing items from the Regular Council Meeting held on March 9, 2021. Mayor Gilbert called for Council Member roll call.

PH1 Dianne Khin, Director of Planning and Community Development
Ordinance on the Question of Annexation – Apex Town Council's intent to annex Lufkin Leased Fee, LLC (3050 Lufkin Road) property containing 3.33 acres located at 3050 Lufkin Road, Annexation #707 into the Town's corporate limits

Staff provided a review and stated there were no new public comments.

Mayor Gilbert called for a motion. Council Member Stallings made a motion to adopt the Ordinance; Council Member Gantt seconded the motion. The motion carried by a 5-0 roll call vote.

PH2 Amanda Bunce, Current Planning Manager
Amendment to the Unified Development Ordinance related to Resource Conservation Area in North Carolina Certified Sites

Staff provided a review and stated there were no new public comments.

Mayor Gilbert called for a motion. Council Member Killingsworth made a motion to approve the Amendments; Council Member Dozier seconded the motion. The motion carried by a 5-0 roll call vote.

PH3 Shannon Cox, Long Range Planning Manager
Proposed amendments to the Thoroughfare and Collector Street Plan map related to the site known as Cash Corporate Center, south of Production Drive and Burma Drive and north of Pristine Water Drive

Staff provided a review and stated there were no new public comments.

Mayor Gilbert called for a motion. Council Member Stallings made a motion to approve the Amendments; Council Member Killingsworth seconded the motion. The motion carried by a 5-0 roll call vote.

PH4 Shannon Cox, Long Range Planning Manager
Proposed amendments to the Thoroughfare and Collector Street Plan map along and in the vicinity of New Hill Olive Chapel Road near Old US 1 Highway

Staff provided a review and stated there were no new public comments.

Council stated we need to think long term about the land use west of New Olive Chapel going forward. He spoke about the two-lane roads coming with long term consequences.

Council asked Council if he was concerned about density, Council answering 'yes'. Council stated it was worth having a conversation about this.

Council stated he didn't understand the density concern. The purpose of this change was more about commuters than land use. Responding to Council, Council stated he agreed this needed to be a regional discussion. Staff stated changes are needed. She re-emphasized this was more about commuter traffic, but she understood the density concern. She thought it was fine to revisit this.

Council stated we want to be as planful as possible moving forward.

Mayor Gilbert called for a motion. Council Member Mahaffey made a motion to approve Alternative 1; Council Member Gantt seconded the motion. The motion carried by a 5-0 roll call vote.

ADJOURNMENT

With no further business and without objection from Council, Mayor Gilbert adjourned the meeting.

_____
Donna B. Hosch, MMC, Town Clerk

ATTEST:

_____
Jacques K. Gilbert, Mayor

This page left blank intentionally.

# | Agenda Item | cover sheet

for consideration by the Apex Town Council

Item Type: CONSENT AGENDA

Meeting Date: March 23, 2021

## Item Details

Presenter(s): Donna Hosch, Town Clerk

Department(s): Office of the Town Clerk

Requested Motion

Motion to approve the Apex Tax Report dated 02/01/2021

Approval Recommended?

Yes

Item Details

At its regular meeting held on March 1, 2021, the Wake County Board of Commissioners approved the Apex Tax Report dated 02/01/2021.

Attachments

- Tax Report

Board Report

Return

Date : 03/01/2021

Approved By : Kris Labacher

TO : WAKE COUNTY BOARD OF COMMISSIONERS

RE: CONSIDERATION OF REFUND FOR TAXES, INTEREST AND PENALTIES FOR APEX

| No. | Name of Tax Payer | Account Number | Tax and Penalties | | Total Rebate | Total Refund | Request Status |
|---|---|---|---|---|---|---|---|
| 1 | MILLER, STEPHEN J<br>PO BOX 532<br>APEX NC, 27502 - 0532 | 0000218855- 2020- 2020- 000000 | City<br>County | 214.72<br>339.03 | 553.75 | 553.75 | Refund |
| | **Marcus D. Kinrade** | | Total City Rebated | 214.72 | | | |
| | **Wake County Tax Administrator** | | Total County Rebated | 339.03 | | | |
| | MSDL | | **Total Rebate/Refund** | | 553.75 | 553.75 | |

CC:

***Refund amount may differ from rebated total due to released interest or application of payment to any balance due on the account.**

Print Form

Board Report

Return

Date : 03/01/2021

Approved By : Kim Lobacher

TO : WAKE COUNTY BOARD OF COMMISSIONERS

RE: CONSIDERATION OF REFUND FOR TAXES, INTEREST AND PENALTIES FOR APEX

| No. | Name of Tax Payer | Account Number | Tax and Penalties | | Total Rebate | Total Refund | Request Status |
|---|---|---|---|---|---|---|---|
| 1 | RIDPATH, CHRISTOPHER MICHAEL<br>2819 KENTSHIRE PL<br>APEX NC, 27523 | 0006890352- 2020- 2019- 000000 | City<br>County | 121.05<br>166.80 | 287.85 | 287.85 | Refund |
| | **Marcus D. Kinrade** | | Total City Rebated | 121.05 | | | |
| | **Wake County Tax Administrator** | | Total County Rebated | 166.80 | | | |
| | | | **Total Rebate/Refund** | | 287.85 | 287.85 | |

CC:

*Refund amount may differ from rebated total due to released interest or application of payment to any balance due on the account.

WAKE COUNTY
NORTH CAROLINA

**Wake County Tax Administration**
**Rebate Details**
01/01/2021 - 01/31/2021
**APEX**

| DATE | TIME | PAGE |
|---|---|---|
| 02/01/2021 | 9:42:24 PM | 1 |

| REBATE NUMBER | PROPERTY | CITY TAG | LATE LIST | BILLED INTEREST | TOTAL REBATED | PROCESS DATE | ACCOUNT NUMBER | TAX YEAR | YEAR FOR | BILLING TYPE | OWNER |
|---|---|---|---|---|---|---|---|---|---|---|---|
| **BUSINESS ACCOUNTS** | | | | | | | | | | | |
| 775804 | 0.00 | 0.00 | 0.39 | 0.00 | 0.39 | 01/07/2021 | 0006707784 | 2020 | 2020 | 006000 | ADVANTAGE SALES & MARKETING LLC |
| 775815 | 0.00 | 0.00 | 16.94 | 0.00 | 16.94 | 01/07/2021 | 0006142317 | 2020 | 2020 | 006000 | DUNCAN-PARNELL INC |
| 776600 | 264.40 | 0.00 | 26.44 | 0.00 | 290.84 | 01/15/2021 | 0006797769 | 2020 | 2020 | 000000 | PEAK CITY HOLDINGS LLC |
| 776599 | 519.73 | 0.00 | 51.97 | 0.00 | 571.70 | 01/15/2021 | 0006797769 | 2019 | 2019 | 000000 | PEAK CITY HOLDINGS LLC |
| 776485 | 2.78 | 0.00 | 0.28 | 0.00 | 3.06 | 01/14/2021 | 0006856937 | 2020 | 2020 | 000000 | HARTOJO, GEMI |
| 776272 | 1,141.12 | 0.00 | 114.11 | 0.00 | 1,255.23 | 01/13/2021 | 0006910822 | 2020 | 2020 | 000000 | MARKRAFT CABINETS LLC |
| **SUBTOTALS FOR BUSINESS ACCOUNTS** | **1,928.03** | **0.00** | **210.13** | **0.00** | **2,138.16** | 6 | **Properties Rebated** | | | | |
| **BUSINESS REAL ESTATE ACCOUNTS** | | | | | | | | | | | |
| 776135 | 44.12 | 0.00 | 0.00 | 0.00 | 44.12 | 01/10/2021 | 0000468392 | 2020 | 2020 | 000000 | B9 MF VILLAGE WEST OWNER LLC |
| 776099 | 2,346.41 | 0.00 | 0.00 | 0.00 | 2,346.41 | 01/10/2021 | 0000047424 | 2020 | 2020 | 000000 | HENDRICK AUTOMOTIVE GROUP |
| 776133 | 368.03 | 0.00 | 0.00 | 0.00 | 368.03 | 01/10/2021 | 0000469235 | 2020 | 2020 | 000000 | B9 MF VILLAGE WEST OWNER LLC |
| 777115 | 3.42 | 0.00 | 0.00 | 0.00 | 3.42 | 01/25/2021 | 0000005882 | 2020 | 2020 | 000000 | SALEM VILLAGE OWNERS ASSOCIATION INC |
| **SUBTOTALS FOR BUSINESS REAL ESTATE ACCOUNTS** | **2,761.98** | **0.00** | **0.00** | **0.00** | **2,761.98** | 4 | **Properties Rebated** | | | | |

| REBATE NUMBER | PROPERTY | CITY TAG | LATE LIST | BILLED INTEREST | TOTAL REBATED | PROCESS DATE | ACCOUNT NUMBER | TAX YEAR | YEAR FOR | BILLING TYPE | OWNER |
|---|---|---|---|---|---|---|---|---|---|---|---|
| **INDIVIDUAL PROPERTY ACCOUNTS** | | | | | | | | | | | |
| 777235 | 96.05 | 25.00 | 0.00 | 0.00 | 121.05 | 01/26/2021 | 0006890352 | 2020 | 2019 | 000000 | RIDPATH, CHRISTOPHER MICHAEL |
| **SUBTOTALS FOR INDIVIDUAL PROPERTY ACCOUNTS** | **96.05** | **25.00** | **0.00** | **0.00** | **121.05** | **1** | **Properties Rebated** | | | | |
| **INDIVIDUAL REAL ESTATE ACCOUNTS** | | | | | | | | | | | |
| 777234 | 346.61 | 0.00 | 0.00 | 0.00 | 346.61 | 01/29/2021 | 0000057537 | 2020 | 2020 | 000000 | THOMAS, DIANNE R |
| 776105 | 170.05 | 0.00 | 0.00 | 0.00 | 170.05 | 01/10/2021 | 0000436789 | 2020 | 2020 | 000000 | ENGLISH, CHRISTOPHER N |
| 776143 | 934.71 | 0.00 | 0.00 | 0.00 | 934.71 | 01/10/2021 | 0000273745 | 2020 | 2020 | 000000 | APEX HOSPITALITY GROUP LLC |
| **SUBTOTALS FOR INDIVIDUAL REAL ESTATE ACCOUNTS** | **1,451.37** | **0.00** | **0.00** | **0.00** | **1,451.37** | **3** | **Properties Rebated** | | | | |
| **WILDLIFE BOAT ACCOUNTS** | | | | | | | | | | | |
| 776487 | 11.97 | 0.00 | 1.20 | 0.00 | 13.17 | 01/14/2021 | 0004199724 | 2020 | 2020 | 000000 | SMITH, KRISTOPHER BRIAN |
| **SUBTOTALS FOR WILDLIFE BOAT ACCOUNTS** | **11.97** | **0.00** | **1.20** | **0.00** | **13.17** | **1** | **Properties Rebated** | | | | |

| REBATE NUMBER | PROPERTY | CITY TAG | LATE LIST | BILLED INTEREST | TOTAL REBATED | PROCESS DATE | ACCOUNT NUMBER | TAX YEAR | YEAR FOR | BILLING TYPE | OWNER |
|---|---|---|---|---|---|---|---|---|---|---|---|
| TOTAL REBATED FOR APEX | 6,249.40 | 25.00 | 211.33 | 0.00 | 6,485.73 | | 15 Properties Rebated for City | | | | |

# | Agenda Item | cover sheet

for consideration by the Apex Town Council

Item Type: CONSENT AGENDA

Meeting Date: March 23, 2021

## Item Details

Presenter(s): Amanda Bunce, Current Planning Manager

Department(s): Planning and Community Development

Requested Motion

Motion to approve the Statement of the Apex Town Council pursuant to G.S. 160D-605(a) addressing action on the Unified Development Ordinance (UDO) Amendment of March 11, 2021.

Approval Recommended?

The Planning and Community Development Department recommends approval.

Item Details

Attachments

- Statement of Town Council

**STATEMENT OF THE APEX TOWN COUNCIL PURSUANT TO G.S. 160D-605(a) ADDRESSING ACTION ON THE UNIFIED DEVELOPMENT ORDINANCE (UDO) AMENDMENT OF MARCH 11, 2021**

Pursuant to G.S. §160D-601 and Sec. 2.2.11.E of the Unified Development Ordinance, the Planning and Community Development Director for the Town of Apex, Dianne Khin, caused proper notice to be given (by publication and posting), of a public hearing on UDO Amendments before the Town Council on the 9th day of March 2021.

The Apex Town Council held a public hearing on the 9th day of March 2021. Amanda Bunce, Current Planning Manager, presented the Planning Board's vote to recommend approval by a vote of 6-0 at the public hearing.

All persons who desired to present information relevant to the UDO Amendments and who were residents of Apex or its extraterritorial jurisdiction were allowed to present evidence at the public hearing before the Apex Town Council. No one who wanted to speak was turned away.

The Town Council, following a 24-hour public comment period, on the 11th day of March 2021 by a vote of 5 to 0 approved the Ordinance for UDO Amendments.

The Apex Town Council finds from information and testimony provided at the public hearing that the approval of the various UDO Amendments of March 11, 2021 is consistent with the Advance Apex: The 2045 Plan and reasonable and in the public interest for the following reason(s):

1. The amendments to UDO Sec. 8.1.2.C.10 *Size of the RCA, North Carolina Certified Sites* adds a maximum amount of Resource Conservation Area (RCA) that is required in a development designated as a North Carolina Certified site by the North Carolina Department of Revenue in order to improve the developable area of the site while protecting valuable natural resources.

_____
Jacques K. Gilbert
Mayor

ATTEST:

_____
Donna B. Hosch, MMC, NCCMC
Town Clerk

_____
Date

# | Agenda Item | cover sheet

for consideration by the Apex Town Council

Item Type: CONSENT AGENDA

Meeting Date: March 23, 2021

## Item Details

Presenter(s): Amanda Bunce, Current Planning Manager

Department(s): Planning and Community Development

Requested Motion

Motion to set the Public Hearing for the April 13, 2021 Town Council meeting regarding various amendments to the Unified Development Ordinance.

Approval Recommended?

The Planning and Community Development Department recommends approval.

Item Details

Summary of UDO Amendments

Requested by Planning and Economic Development Staff:

1. Amendments to Sec. 4.2.2 *Use Table* and 4.4.5.D *Supplemental Standards, Office and Research* in order to add the use "Medical or dental laboratory" as a permitted use in the Planned Commercial (PC) zoning district, non-storefront locations in the Downtown Business (B2) zoning districts, and the Small Town Character Overlay District and to provide supplemental standards for such use.

Requested by Planning Staff:

2. Amendment to Sec. 8.2.7.B *Fence/Wall Height* in order to correct a typographical error in a reference to another subsection.

Attachments

- N/A

# | Agenda Item | cover sheet

for consideration by the Apex Town Council

Item Type: CONSENT AGENDA

Meeting Date: March 23, 2021

## Item Details

Presenter(s): Dianne Khin, Director of Planning and Community Development

Department(s): Planning and Community Development

Requested Motion

Motion to adopt a resolution Directing the Town Clerk to Investigate Petition Received, to accept the Certificate of Sufficiency by the Town Clerk and to adopt a Resolution Setting Date of Public Hearing for April 13, 2021 on the Question of Annexation – Apex Town Council's intent to annex Jordan Lutheran Church property containing 6.22 acres located at 1201 Chapel Ridge Road, Annexation #708 into the Town's corporate limits.

Approval Recommended?

Yes, by the Planning and Community Development Department.

Item Details

The Town Clerk certifies to the investigation of said annexation. Adoption of the Resolution authorizes the Town Clerk to advertise said public hearing by electronic means and on the Town of Apex's website.

Attachments

- Annexation Petition
- Legal Description
- Vicinity Map
- Resolution Directing the Town Clerk to Investigate Petition
- Certificate of Sufficiency by the Town Clerk
- Resolution Setting Date of Public Hearing

RESOLUTION DIRECTING THE TOWN CLERK
TO INVESTIGATE PETITION RECEIVED UNDER G.S.§ 160A-31

Annexation Petition#708
Jordan Lutheran Church (1201 Chapel Ridge Road)

WHEREAS, G.S. §160-A 31 provides that the sufficiency of the petition shall be investigated by the Town Clerk before further annexation proceedings may take place; and

WHEREAS, the Town Council of the Town of Apex deems it advisable to proceed in response to this request for annexation;

NOW, THEREFORE, BE IT RESOLVED by the Town Council of the Town of Apex, that the Town Clerk is hereby directed to investigate the sufficiency of the above-described petition and to certify to the Town Council the result of her investigation.

This the 23rd day of March 2021.

_____
Jacques K. Gilbert
Mayor

ATTEST:

_____
Donna B. Hosch, MMC, NCCMC
Town Clerk




CERTIFICATE OF SUFFICIENCY BY THE TOWN CLERK

Annexation Petition #708
Jordan Lutheran Church (1201 Chapel Ridge Road)

**To: The Town Council of the Town of Apex, North Carolina**

I, Donna B. Hosch, Town Clerk, do hereby certify that I have investigated the annexation petition attached hereto, and have found, as a fact, that said petition is signed by all owners of real property lying in the area described therein, in accordance with G.S.§ 160A-31, as amended.

IN WITNESS WHEREOF, I have hereunto set my hand and affixed the seal of the Town of Apex, North Carolina this 23rd day of March 2021.

_____
Donna B. Hosch, MMC, NCCMC
Town Clerk

(Seal)

# PETITION FOR VOLUNTARY ANNEXATION

This document is a public record under the North Carolina Public Records Act and may be published on the Town's website or disclosed to third parties.

Application #: 708 Submittal Date: 2/1/21

Fee Paid $ 200.00 Check #

## TO THE TOWN COUNCIL APEX, NORTH CAROLINA

1. We, the undersigned owners of real property, respectfully request that the area described in Part 4 below be annexed to the Town of Apex, Wake County, North Carolina.
2. The area to be annexed is ☒ contiguous, ☐ non-contiguous (satellite) to the Town of Apex, North Carolina and the boundaries are as contained in the metes and bounds description attached hereto.
3. If contiguous, this annexation will include all intervening rights-of-way for streets, railroads, and other areas as stated in G.S. 160A-31(f), unless otherwise stated in the annexation amendment.

## OWNER INFORMATION

| | |
|---|---|
| JORDAN LUTHERAN CHURCH INC<br>Owner Name (Please Print) | 0732.25 8464<br>Property PIN or Deed Book & Page # |
| 919 303 1613 - OFFICE<br>Phone | CJBUEHRING@GMAIL.COM<br>E-mail Address |
| Owner Name (Please Print) | Property PIN or Deed Book & Page # |
| Phone | E-mail Address |
| Owner Name (Please Print) | Property PIN or Deed Book & Page # |
| Phone | E-mail Address |

## SURVEYOR INFORMATION

Surveyor: BENTON DEWAR

Phone: 919 868 1449 Fax:

E-mail Address: BENTONDEWAR@GMAIL.COM

## ANNEXATION SUMMARY CHART

| Property Information | | Reason(s) for annexation (select all that apply) | |
|---|---|---|---|
| Total Acreage to be annexed: | 6.22 | Need water service due to well failure | ☐ |
| Population of acreage to be annexed: | CHURCH | Need sewer service due to septic system failure | ☐ |
| Existing # of housing units: | 1 | Water service (new construction) | ☒ |
| Proposed # of housing units: | CHURCH | Sewer service (new construction) | ☒ |
| Zoning District*: | RURAL RESIDENTIAL | Receive Town Services | ☒ |

*If the property to be annexed is not within the Town of Apex's Extraterritorial Jurisdiction, the applicant must also submit a rezoning application with the petition for voluntary annexation to establish an Apex zoning designation. Please contact the Planning Department for questions.

## PETITION FOR VOLUNTARY ANNEXATION

Application #: _____ Submittal Date: _____

### COMPLETE IF SIGNED BY INDIVIDUALS:

All individual owners must sign. (If additional signatures are necessary, please attach an additional sheet.)

| Please Print | Signature |
|---|---|
| Please Print | Signature |
| Please Print | Signature |
| Please Print | Signature |

STATE OF NORTH CAROLINA
COUNTY OF WAKE

Sworn and subscribed before me, _____, a Notary Public for the above State and County, this the _____day of, _____, 20____.

_____
Notary Public

SEAL

My Commission Expires: _____

### COMPLETE IF A CORPORATION:

In witness whereof, said corporation has caused this instrument to be executed by its President and attested by its Secretary by order of its Board of Directors, this the _____ day of _____, 20_____.

Corporate Name JORDAN LUTHERAN CHURCH INC

SEAL

JK

By: _____
President (Signature)

Attest:

WR Wray Robertson
Secretary (Signature)

STATE OF NORTH CAROLINA
COUNTY OF WAKE

Sworn and subscribed before me, Tyler Morgan, a Notary Public for the above State and County, this the 25 day of January, 2021.

_____
Notary Public

SEAL

TYLER MORGAN
Notary Public
Wake Co., North Carolina
My Commission Expires April 27, 2021

My Commission Expires: 27 April 2021

Legal Description
Jordan Lutheran Church, Inc.

BEGINNING at an existing iron pipe having NC Grid Coordinates of N – 725,229.62 E – 2,033,153.88 NAD 83(2012B),on the western right of way of Chapel Ridge Road, and being North 65 degrees 04 minutes 24 seconds West – 345.50 feet from the intersection of Chapel Ridge Road and Ackerman Hill Drive:
Thence South 84 degrees 44 minutes 16 seconds West – 165.05 feet to an existing iron pipe;
Thence crossing a pond, North 89 degrees 19 minutes 00 seconds West – 516.35 feet to an iron stake set;
Thence North 14 degrees 02 minutes 35 seconds East – 49.56 feet to an iron stake set;
Thence North 19 degrees 52 minutes 06 seconds East – 68.19 feet to an iron stake set;
Thence North 19 degrees 14 minutes 38 seconds East – 62.17 feet to an iron stake set, on the southern right of way of Beaver Creek Commons Drive;
Thence along said right of way, along a curve to the left having a radius of 889.50 feet, an arc length of 316.35 feet, a chord bearing and distance of North 39 degrees 21 minutes 36 seconds East – 314.69 feet to an iron stake set;
Thence along said right of way, North 29 degrees 10 minutes 16 seconds East – 133.27 feet to an iron stake set;
Thence leaving said right of way, North 88 degrees 41 minutes 57 seconds East – 308.19 feet to an existing iron pipe, the corner between Lot 4 and Lot 5;
Thence the following calls along the lot line between Lot 4 and Lot 5:
South 03 degrees 08 minutes 46 seconds East – 329.74 feet to an existing iron pipe;
South 23 degrees 19 minutes 50 seconds East – 162.12 feet to an iron stake set on the western right of way of Chapel Ridge Road;
Thence along the western right of way of Chapel Ridge Road along a curve to the left having a radius of 50.00 feet, an arc length of 62.76 feet, a chord bearing and distance of South 30 degrees 41 minutes 41 seconds West – 58.72 feet to an existing iron pipe, the point of BEGINNING, containing 6.22 acres more or less, and being the residual area of Lot 4 Chapel Ridge Subdivision, Phase II. As recorded in Book of Maps 1987 Page 556 in the Wake County Register of Deeds.

## LEGEND

CMS – CONCRETE MONUMENT SET
ECM – EXISTING CONCRETE MONUMENT
EIP – EXISTING IRON PIPE
EIS – EXISTING IRON STAKE
ERB – EXISTING REBAR
ECS – EXISTING COTTON SPIKE
EPK – EXISTING PK NAIL
EN – EXISTING NAIL
ERS – EXISTING RAILROAD SPIKE
IPS – IRON PIPE SET
ISS – IRON STAKE SET
RSS – RAILROAD SPIKE SET
NS – NAIL SET
PKS – PK OR MAG. NAIL SET
R/W – RIGHT OF WAY
CL – CENTERLINE
B.M. – BOOK OF MAPS
P.B. – PLAT BOOK
M.B. – MAP BOOK
D.B. – DEED BOOK
SB – SET BACK
EP – EDGE PAVEMENT
NCGS – NORTH CAROLINA GEODETIC SURVEY
SL – STREET LIGHT

ECS – EXISTING COTTON SPINDLE
CSS – COTTON SPINDLE SET
D – DRAINAGE
G – GAS LINE
S – SANITARY SEWER
W – WATER
E – ELECTRIC
T – TELEPHONE
FH – FIRE HYDRANT
WM – WATER METER
WV – WATER VALVE
CO – SEWER CLEANOUT
TP – TELEPHONE PEDESTAL
UP – UTILITY POLE
EL – ELEVATION
MH – MANHOLE
BC – BACK OF CURB
HVAC – HEAT/AC UNIT
CP – COMPUTED POINT

NOTES
AREA BY COORDINATES.

THIS PROPERTY IS NOT LOCATED IN A FEMA MAPPED FLOOD HAZARD AREA. FEMA MAP # 3720073200J; ZONE X; EFF. DATE 5/2/2006.

SUBJECT TO ABOVE AND OR UNDERGROUND UTILITIES AND OR EASEMENTS.

NC GRID COORDINATES FORM GPS VRS OBSERVATONS. GPS UNIT – SPECTRA PRECISION SP 80.

HORIZONTAL – NAD 83 (2012B).
VERTICAL – NAVD 1988

RIGHT OF WAY OF BEAVER CREEK COMMONS DRIVE FROM BOOK OF MAPS 2006 PAGE 1566

I, BENTON W. DEWAR, CERTIFY THAT THIS PLAT WAS PREPARED UNDER MY SUPERVISION FROM AN ACTUAL FIELD SURVEY OF DESCRIPTION(S) AS RECORDED IN DEED BOOK 17576 PAGE 1305 THAT THE BOUNDARIES NOT SURVEYED ARE CLEARLY INDICATED AS SUCH AND WERE PLATTED FROM INFORMATION AS REFERENCED HERON: THAT THE RATIO OF PRECISION AS CALCULATED WAS 1:15,000+ AND THAT THE GLOBAL NAVAGATION SATELLITE SYSTEM (GNSS) WAS USED TO PERFORM A PORTION OF THIS SURVEY AND THE FOLLOWING INFORMATION WAS USED:

CLASS OF SURVEY : A
POSITIONAL ACCURACY : 0.03'
TYPE OF GPS FIELD PROCEDURE : RTK
DATES OF SURVEY : NOVEMBER 2020
DATUM/EPOCH : NAD83
PUBLISHED/FIXED-FIXED CONTROL USE : VRS
GEOID MODEL : 2012B
COMBINED GRID FACTOR : 0.999908
UNITS : US SURVEY FOOT

ANNEXATION # _____

I, DONNA B. HOSCH, MMC, NCCMC, TOWN CLERK, APEX, NORTH CAROLINA CERTIFY THIS A TRUE AND EXACT MAP OF ANNEXATION ADOPTED

THE ____ DAY OF _____, 2021

BY THE TOWN COUNCIL. I SET MY HAND AND SEAL OF THE TOWN OF APEX, _____, 2021.

_____
DONNA B. HOSCH, MMC, NCCMC, TOWN CLERK

I, BENTON W. DEWAR, PROFESSIONAL LAND SURVEYOR NO. L-3040, CERTIFY:

THAT THE SURVEY IS OF AN EXISTING PARCEL OR PARCELS OF LAND OR ONE OR MORE EXISTING EASEMENTS AND DOES NOT CREATE A NEW STREET OR CHANGE AN EXISTING STREET.
FOR THE PURPOSES OF THIS SUBSECTION, AN "EXISTING PARCEL" OR "EXISTING EASEMENT" IS AN AREA OF LAND DESCRIBED IN A SINGLE, LEGAL DESCRIPTION OF LEGALLY RECORDED SUBDIVISION THAT HAS BEEN OR MAY BE LEGALLY CONVEYED TO A NEW OWNER BY DEED IN IT'S EXISTING CONFIGURATION.

_____
BENTON W. DEWAR NCPLS 3040

I, BENTON W. DEWAR, CERTIFY THAT THIS PLAT WAS DRAWN UNDER MY SUPERVISION FROM AN ACTUAL SURVEY MADE UNDER MY SUPERVISION DEED BOOK 17576 PAGE 1305 MAP # 1987 PAGE 556; THAT THE BOUNDARIES NOT SURVEYED ARE CLEARLY INDICATED AS DRAWN FROM INFORMATION FOUND IN DEED MAP BOOK ____ PAGE ____; THAT THE RATIO OF PRECISION OR POSITIONAL ACCURACY AS CALCULATED IS 1:15,000+; THAT THIS PLAT WAS PREPARED IN ACCORDANCE WITH G.S. 47-30 AS AMMENDED. WITNESS MY ORIGINAL SIGNATRUE, LICENSE NUMBER AND SEAL THIS 2ND DAY OF MARCH, A.D. 20 21

_____
BENTON W. DEWAR, NCPLS – 3040

NORTH CAROLINA PROFESSIONAL L-3040 LAND SURVEYOR BENTON W. DEWAR

REVISIONS
2\12\2021 TOWN COMMENTS

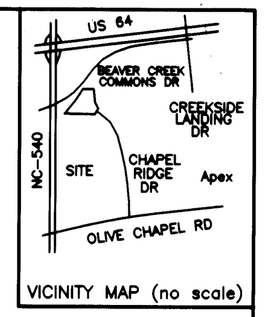

VICINITY MAP (no scale)

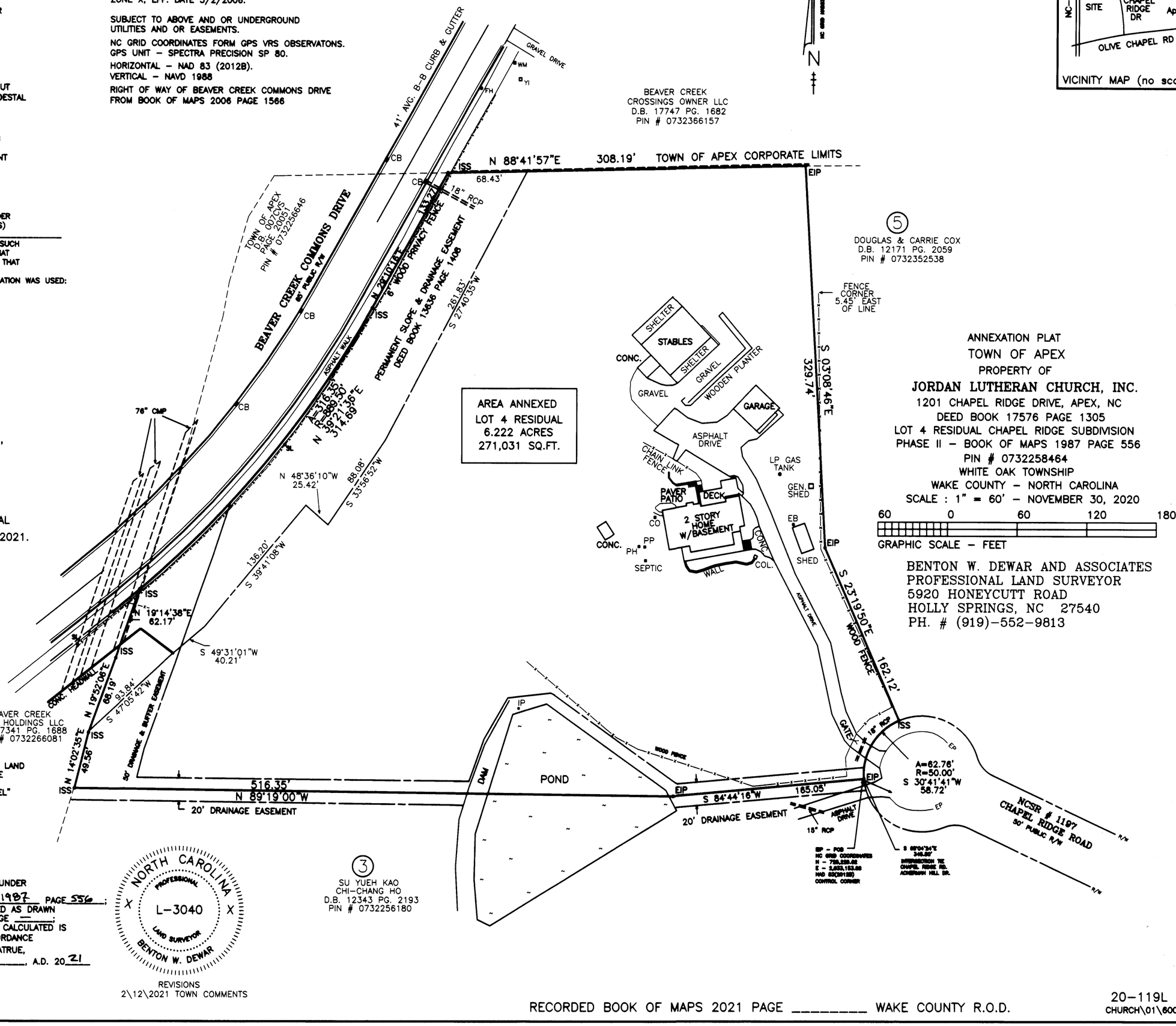


ANNEXATION PLAT
TOWN OF APEX
PROPERTY OF
**JORDAN LUTHERAN CHURCH, INC.**
1201 CHAPEL RIDGE DRIVE, APEX, NC
DEED BOOK 17576 PAGE 1305
LOT 4 RESIDUAL CHAPEL RIDGE SUBDIVISION
PHASE II – BOOK OF MAPS 1987 PAGE 556
PIN # 0732258464
WHITE OAK TOWNSHIP
WAKE COUNTY – NORTH CAROLINA
SCALE : 1" = 60' – NOVEMBER 30, 2020

60 0 60 120 180
GRAPHIC SCALE – FEET

BENTON W. DEWAR AND ASSOCIATES
PROFESSIONAL LAND SURVEYOR
5920 HONEYCUTT ROAD
HOLLY SPRINGS, NC 27540
PH. # (919)-552-9813

RECORDED BOOK OF MAPS 2021 PAGE _____ WAKE COUNTY R.O.D.

20-119L
CHURCH\01\600

# Wake County Real Estate Data
## Account Summary

Real Estate ID **0165055** PIN # **0732258464**

Location Address
**1201 CHAPEL RIDGE RD**

Property Description
**LO4 GRT PRT CHAPEL RIDGE SUB PH2 BM1987-00556**

| Property Owner | Owner's Mailing Address | Property Location Address |
|---|---|---|
| **JORDAN LUTHERAN CHURCH INC**<br>(Use the Deeds link to view any additional owners) | **1031 PEMBERTON HILL RD STE 202**<br>**APEX NC 27502-4278** | **1201 CHAPEL RIDGE RD**<br>**APEX NC 27502-8502** |

| **Administrative Data** | | **Transfer Information** | | **Assessed Value** | |
|---|---|---|---|---|---|
| Old Map # | **595--** | | | | |
| Map/Scale | **0732 01** | Deed Date | **9/16/2019** | Land Value Assessed | **$178,200** |
| VCS | **20AP101** | Book & Page | **17576 1305** | Bldg. Value Assessed | **$449,541** |
| City | | Revenue Stamps | **2000.00** | | |
| Fire District | **23** | Pkg Sale Date | **9/16/2019** | | |
| Township | **WHITE OAK** | Pkg Sale Price | **$1,000,000** | Tax Relief | |
| Land Class | **R-<10-HS** | Land Sale Date | | | |
| ETJ | **AP** | Land Sale Price | | Land Use Value | |
| Spec Dist(s) | | | | Use Value Deferment | |
| Zoning | **RR** | **Improvement Summary** | | Historic Deferment | |
| History ID 1 | | | | Total Deferred Value | |
| History ID 2 | | Total Units | **1** | | |
| Acreage | **6.19** | Recycle Units | **1** | | |
| Permit Date | **10/15/2014** | Apt/SC Sqft | | Use/Hist/Tax Relief | |
| Permit # | **0000021247** | Heated Area | **5,749** | Assessed | |
| | | | | Total Value Assessed* | **$627,741** |

*Wake County assessed building and land values reflect the market value as of January 1, 2020, which is the date of the last county-wide revaluation. Any inflation, deflation or other economic changes occurring after this date does not affect the assessed value of the property and cannot be lawfully considered when reviewing the value for adjustment.

The January 1, 2020 values will remain in effect until the next county-wide revaluation. Until that time, any real estate accounts created or new construction built is assessed according to the 2020 Schedule of Values.

**For questions regarding the information displayed on this site, please contact the Department of Tax Administration at Taxhelp@wakegov.com or call 919-856-5400.**

RESOLUTION SETTING DATE OF PUBLIC HEARING
ON THE QUESTION OF ANNEXATION PURSUANT TO G.S.§ 160A-31 AS AMENDED

Annexation Petition #708
Jordan Lutheran Church (1201 Chapel Ridge Road)

WHEREAS, a petition requesting annexation of the area described herein has been received; and

WHEREAS, the Town Council of Apex, North Carolina has by Resolution directed the Town Clerk to investigate the sufficiency thereof; and

WHEREAS, Certification by the Town Clerk as to the sufficiency of said petition has been made;

NOW, THEREFORE, BE IT RESOLVED by the Town Council of the Town of Apex, North Carolina that:

Section 1. A public hearing on the question of annexation of the area described herein will be held at the Apex Town Hall at 6 o'clock p.m. on the 13th day of April 2021.

Section 2. The area proposed for annexation is described as attached.

Section 3. Notice of said public hearing shall be published on the Town of Apex Website, www.apexnc.org, Public Notice, at least ten (10) days prior to the date of said public hearing.

This the 23rd day of March 2021.

_____
Jacques K. Gilbert, Mayor

ATTEST:

_____
Donna B. Hosch, MMC, NCCMC, Town Clerk

Legal Description
Jordan Lutheran Church, Inc.

BEGINNING at an existing iron pipe having NC Grid Coordinates of N – 725,229.62 E – 2,033,153.88 NAD 83(2012B),on the western right of way of Chapel Ridge Road, and being North 65 degrees 04 minutes 24 seconds West – 345.50 feet from the intersection of Chapel Ridge Road and Ackerman Hill Drive:
Thence South 84 degrees 44 minutes 16 seconds West – 165.05 feet to an existing iron pipe;
Thence crossing a pond, North 89 degrees 19 minutes 00 seconds West – 516.35 feet to an iron stake set;
Thence North 14 degrees 02 minutes 35 seconds East – 49.56 feet to an iron stake set;
Thence North 19 degrees 52 minutes 06 seconds East – 68.19 feet to an iron stake set;
Thence North 19 degrees 14 minutes 38 seconds East – 62.17 feet to an iron stake set, on the southern right of way of Beaver Creek Commons Drive;
Thence along said right of way, along a curve to the left having a radius of 889.50 feet, an arc length of 316.35 feet, a chord bearing and distance of North 39 degrees 21 minutes 36 seconds East – 314.69 feet to an iron stake set;
Thence along said right of way, North 29 degrees 10 minutes 16 seconds East – 133.27 feet to an iron stake set;
Thence leaving said right of way, North 88 degrees 41 minutes 57 seconds East – 308.19 feet to an existing iron pipe, the corner between Lot 4 and Lot 5;
Thence the following calls along the lot line between Lot 4 and Lot 5:
South 03 degrees 08 minutes 46 seconds East – 329.74 feet to an existing iron pipe;
South 23 degrees 19 minutes 50 seconds East – 162.12 feet to an iron stake set on the western right of way of Chapel Ridge Road;
Thence along the western right of way of Chapel Ridge Road along a curve to the left having a radius of 50.00 feet, an arc length of 62.76 feet, a chord bearing and distance of South 30 degrees 41 minutes 41 seconds West – 58.72 feet to an existing iron pipe, the point of BEGINNING, containing 6.22 acres more or less, and being the residual area of Lot 4 Chapel Ridge Subdivision, Phase II. As recorded in Book of Maps 1987 Page 556 in the Wake County Register of Deeds.

# PETITION FOR VOLUNTARY ANNEXATION

This document is a public record under the North Carolina Public Records Act and may be published on the Town's website or disclosed to third parties.

Application #: 708 Submittal Date: 2/1/21

Fee Paid $ 200.00 Check #

## TO THE TOWN COUNCIL APEX, NORTH CAROLINA

1. We, the undersigned owners of real property, respectfully request that the area described in Part 4 below be annexed to the Town of Apex, Wake County, North Carolina.
2. The area to be annexed is ☒ contiguous, ☐ non-contiguous (satellite) to the Town of Apex, North Carolina and the boundaries are as contained in the metes and bounds description attached hereto.
3. If contiguous, this annexation will include all intervening rights-of-way for streets, railroads, and other areas as stated in G.S. 160A-31(f), unless otherwise stated in the annexation amendment.

## OWNER INFORMATION

| | |
|---|---|
| JORDAN LUTHERAN CHURCH INC<br>Owner Name (Please Print) | 0732.25 8464<br>Property PIN or Deed Book & Page # |
| 919 303 1613 - OFFICE<br>Phone | CJBUEHRING@GMAIL.COM<br>E-mail Address |
| Owner Name (Please Print) | Property PIN or Deed Book & Page # |
| Phone | E-mail Address |
| Owner Name (Please Print) | Property PIN or Deed Book & Page # |
| Phone | E-mail Address |

## SURVEYOR INFORMATION

Surveyor: BENTON DEWAR

Phone: 919 868 1449 Fax:

E-mail Address: BENTONDEWAR@GMAIL.COM

## ANNEXATION SUMMARY CHART

| Property Information | | Reason(s) for annexation (select all that apply) | |
|---|---|---|---|
| Total Acreage to be annexed: | 6.22 | Need water service due to well failure | ☐ |
| Population of acreage to be annexed: | CHURCH | Need sewer service due to septic system failure | ☐ |
| Existing # of housing units: | 1 | Water service (new construction) | ☒ |
| Proposed # of housing units: | CHURCH | Sewer service (new construction) | ☒ |
| Zoning District*: | RURAL RESIDENTIAL | Receive Town Services | ☒ |

*If the property to be annexed is not within the Town of Apex's Extraterritorial Jurisdiction, the applicant must also submit a rezoning application with the petition for voluntary annexation to establish an Apex zoning designation. Please contact the Planning Department for questions.

## PETITION FOR VOLUNTARY ANNEXATION

Application #: _____ Submittal Date: _____

### COMPLETE IF SIGNED BY INDIVIDUALS:

All individual owners must sign. (If additional signatures are necessary, please attach an additional sheet.)

| Please Print | Signature |
|---|---|
| Please Print | Signature |
| Please Print | Signature |
| Please Print | Signature |

STATE OF NORTH CAROLINA
COUNTY OF WAKE

Sworn and subscribed before me, _____, a Notary Public for the above State and County, this the _____day of, _____, 20____.

_____
Notary Public

SEAL

My Commission Expires: _____

### COMPLETE IF A CORPORATION:

In witness whereof, said corporation has caused this instrument to be executed by its President and attested by its Secretary by order of its Board of Directors, this the _____ day of _____, 20_____.

Corporate Name JORDAN LUTHERAN CHURCH INC

SEAL

JK

By: _____
President (Signature)

Attest:

WR Wray Robertson
Secretary (Signature)

STATE OF NORTH CAROLINA
COUNTY OF WAKE

Sworn and subscribed before me, Tyler Morgan, a Notary Public for the above State and County, this the 25 day of January, 2021.

_____
Notary Public

SEAL

TYLER MORGAN
Notary Public
Wake Co., North Carolina
My Commission Expires April 27, 2021

My Commission Expires: 27 April 2021

Legal Description
Jordan Lutheran Church, Inc.

BEGINNING at an existing iron pipe having NC Grid Coordinates of N – 725,229.62 E – 2,033,153.88 NAD 83(2012B),on the western right of way of Chapel Ridge Road, and being North 65 degrees 04 minutes 24 seconds West – 345.50 feet from the intersection of Chapel Ridge Road and Ackerman Hill Drive:
Thence South 84 degrees 44 minutes 16 seconds West – 165.05 feet to an existing iron pipe;
Thence crossing a pond, North 89 degrees 19 minutes 00 seconds West – 516.35 feet to an iron stake set;
Thence North 14 degrees 02 minutes 35 seconds East – 49.56 feet to an iron stake set;
Thence North 19 degrees 52 minutes 06 seconds East – 68.19 feet to an iron stake set;
Thence North 19 degrees 14 minutes 38 seconds East – 62.17 feet to an iron stake set, on the southern right of way of Beaver Creek Commons Drive;
Thence along said right of way, along a curve to the left having a radius of 889.50 feet, an arc length of 316.35 feet, a chord bearing and distance of North 39 degrees 21 minutes 36 seconds East – 314.69 feet to an iron stake set;
Thence along said right of way, North 29 degrees 10 minutes 16 seconds East – 133.27 feet to an iron stake set;
Thence leaving said right of way, North 88 degrees 41 minutes 57 seconds East – 308.19 feet to an existing iron pipe, the corner between Lot 4 and Lot 5;
Thence the following calls along the lot line between Lot 4 and Lot 5:
South 03 degrees 08 minutes 46 seconds East – 329.74 feet to an existing iron pipe;
South 23 degrees 19 minutes 50 seconds East – 162.12 feet to an iron stake set on the western right of way of Chapel Ridge Road;
Thence along the western right of way of Chapel Ridge Road along a curve to the left having a radius of 50.00 feet, an arc length of 62.76 feet, a chord bearing and distance of South 30 degrees 41 minutes 41 seconds West – 58.72 feet to an existing iron pipe, the point of BEGINNING, containing 6.22 acres more or less, and being the residual area of Lot 4 Chapel Ridge Subdivision, Phase II. As recorded in Book of Maps 1987 Page 556 in the Wake County Register of Deeds.

LEGEND

CMS – CONCRETE MONUMENT SET
ECM – EXISTING CONCRETE MONUMENT
EIP – EXISTING IRON PIPE
EIS – EXISTING IRON STAKE
ERB – EXISTING REBAR
ECS – EXISTING COTTON SPIKE
EPK – EXISTING PK NAIL
EN – EXISTING NAIL
ERS – EXISTING RAILROAD SPIKE
IPS – IRON PIPE SET
ISS – IRON STAKE SET
RSS – RAILROAD SPIKE SET
NS – NAIL SET
PKS – PK OR MAG. NAIL SET
R/W – RIGHT OF WAY
CL – CENTERLINE
B.M. – BOOK OF MAPS
P.B. – PLAT BOOK
M.B. – MAP BOOK
D.B. – DEED BOOK
SB – SET BACK
EP – EDGE PAVEMENT
NCGS – NORTH CAROLINA GEODETIC SURVEY
SL – STREET LIGHT

ECS – EXISTING COTTON SPINDLE
CSS – COTTON SPINDLE SET
D – DRAINAGE
G – GAS LINE
S – SANITARY SEWER
W – WATER
E – ELECTRIC
T – TELEPHONE
FH – FIRE HYDRANT
WM – WATER METER
WV – WATER VALVE
CO – SEWER CLEANOUT
TP – TELEPHONE PEDESTAL
UP – UTILITY POLE
EL – ELEVATION
MH – MANHOLE
BC – BACK OF CURB
HVAC – HEAT/AC UNIT
CP – COMPUTED POINT

NOTES
AREA BY COORDINATES.

THIS PROPERTY IS NOT LOCATED IN A FEMA MAPPED FLOOD HAZARD AREA. FEMA MAP # 3720073200J; ZONE X; EFF. DATE 5/2/2006.

SUBJECT TO ABOVE AND OR UNDERGROUND UTILITIES AND OR EASEMENTS.

NC GRID COORDINATES FORM GPS VRS OBSERVATONS. GPS UNIT – SPECTRA PRECISION SP 80.

HORIZONTAL – NAD 83 (2012B).
VERTICAL – NAVD 1988

RIGHT OF WAY OF BEAVER CREEK COMMONS DRIVE FROM BOOK OF MAPS 2006 PAGE 1566

I, BENTON W. DEWAR, CERTIFY THAT THIS PLAT WAS PREPARED UNDER MY SUPERVISION FROM AN ACTUAL FIELD SURVEY OF DESCRIPTION(S) AS RECORDED IN DEED BOOK 17576 PAGE 1305 THAT THE BOUNDARIES NOT SURVEYED ARE CLEARLY INDICATED AS SUCH AND WERE PLATTED FROM INFORMATION AS REFERENCED HERON: THAT THE RATIO OF PRECISION AS CALCULATED WAS 1:15,000+ AND THAT THE GLOBAL NAVAGATION SATELLITE SYSTEM (GNSS) WAS USED TO PERFORM A PORTION OF THIS SURVEY AND THE FOLLOWING INFORMATION WAS USED:

CLASS OF SURVEY : A
POSITIONAL ACCURACY : 0.03'
TYPE OF GPS FIELD PROCEDURE : RTK
DATES OF SURVEY : NOVEMBER 2020
DATUM/EPOCH : NAD83
PUBLISHED/FIXED-FIXED CONTROL USE : VRS
GEOID MODEL : 2012B
COMBINED GRID FACTOR : 0.999908
UNITS : US SURVEY FOOT

ANNEXATION # _____

I, DONNA B. HOSCH, MMC, NCCMC, TOWN CLERK, APEX, NORTH CAROLINA CERTIFY THIS A TRUE AND EXACT MAP OF ANNEXATION ADOPTED

THE ____ DAY OF _____, 2021

BY THE TOWN COUNCIL. I SET MY HAND AND SEAL OF THE TOWN OF APEX, _____, 2021.

_____
DONNA B. HOSCH, MMC, NCCMC, TOWN CLERK

I, BENTON W. DEWAR, PROFESSIONAL LAND SURVEYOR NO. L-3040, CERTIFY:

THAT THE SURVEY IS OF AN EXISTING PARCEL OR PARCELS OF LAND OR ONE OR MORE EXISTING EASEMENTS AND DOES NOT CREATE A NEW STREET OR CHANGE AN EXISTING STREET.

FOR THE PURPOSES OF THIS SUBSECTION, AN "EXISTING PARCEL" OR "EXISTING EASEMENT" IS AN AREA OF LAND DESCRIBED IN A SINGLE, LEGAL DESCRIPTION OF LEGALLY RECORDED SUBDIVISION THAT HAS BEEN OR MAY BE LEGALLY CONVEYED TO A NEW OWNER BY DEED IN IT'S EXISTING CONFIGURATION.

_____
BENTON W. DEWAR NCPLS 3040

I, BENTON W. DEWAR, CERTIFY THAT THIS PLAT WAS DRAWN UNDER MY SUPERVISION FROM AN ACTUAL SURVEY MADE UNDER MY SUPERVISION DEED BOOK 17576 PAGE 1305 MAP # 1987 PAGE 556; THAT THE BOUNDARIES NOT SURVEYED ARE CLEARLY INDICATED AS DRAWN FROM INFORMATION FOUND IN DEED MAP BOOK ____ PAGE ____; THAT THE RATIO OF PRECISION OR POSITIONAL ACCURACY AS CALCULATED IS 1:15,000+; THAT THIS PLAT WAS PREPARED IN ACCORDANCE WITH G.S. 47-30 AS AMMENDED. WITNESS MY ORIGINAL SIGNATRUE, LICENSE NUMBER AND SEAL THIS 2ND DAY OF MARCH, A.D. 20 21

_____
BENTON W. DEWAR, NCPLS – 3040

NORTH CAROLINA PROFESSIONAL L-3040 LAND SURVEYOR BENTON W. DEWAR

REVISIONS
2\12\2021 TOWN COMMENTS

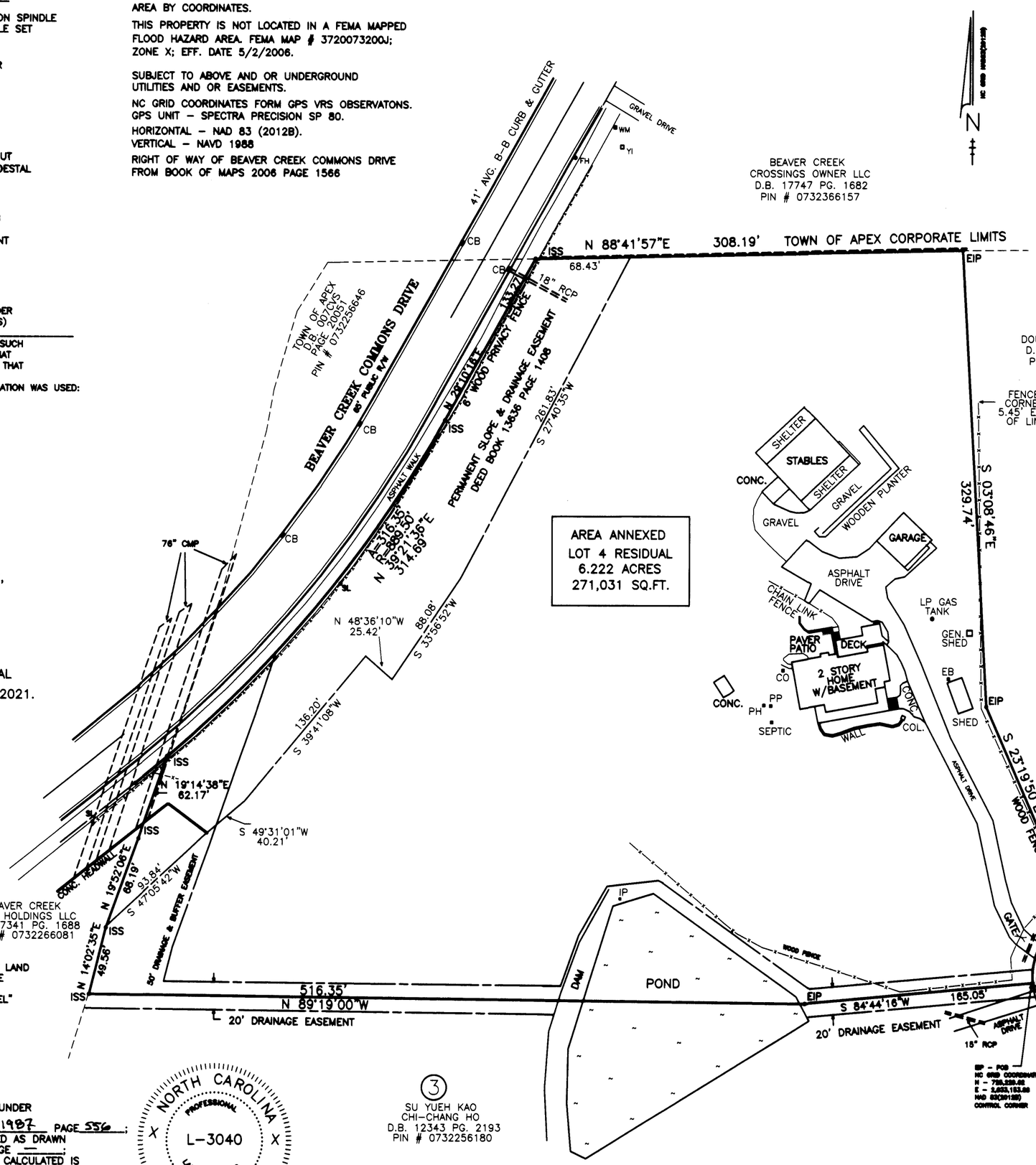


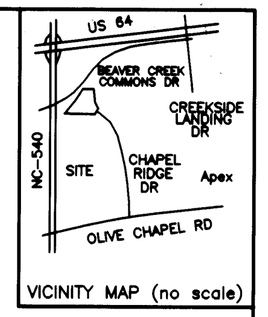

VICINITY MAP (no scale)

ANNEXATION PLAT
TOWN OF APEX
PROPERTY OF
**JORDAN LUTHERAN CHURCH, INC.**
1201 CHAPEL RIDGE DRIVE, APEX, NC
DEED BOOK 17576 PAGE 1305
LOT 4 RESIDUAL CHAPEL RIDGE SUBDIVISION
PHASE II – BOOK OF MAPS 1987 PAGE 556
PIN # 0732258464
WHITE OAK TOWNSHIP
WAKE COUNTY – NORTH CAROLINA
SCALE : 1" = 60' – NOVEMBER 30, 2020

60 0 60 120 180
GRAPHIC SCALE – FEET

BENTON W. DEWAR AND ASSOCIATES
PROFESSIONAL LAND SURVEYOR
5920 HONEYCUTT ROAD
HOLLY SPRINGS, NC 27540
PH. # (919)-552-9813

RECORDED BOOK OF MAPS 2021 PAGE _____ WAKE COUNTY R.O.D.

20-119L
CHURCH\01\600


Annexation #708
Us 64 Hwy To Nc 540 Hwy Sb Ramp
Nc 540 Hwy Nb To Us 64 Hwy Ramp
540
NC 540 Hwy SB
NC 540 Hwy NB
Beaver Creek Crossing
Creekside Landing Dr
Peak 502 at Beaver Creek
Chapel Ridge
Chapel Ridge Rd
Waymaker Ct
Whitesmith Dr
Loresman Aly
Old Chapman Dr
Hempstead at Beaver Creek
Housewright Aly
Knacker Aly
Ackerman Hill Dr
Hempstead at Beaver Creek
Beaver Creek Commons Dr
Chattering Lory Ln
February, 2021
January 2021 Aerial Photography
Prepared by: Town of Apex Planning Department
0
250
500
Feet

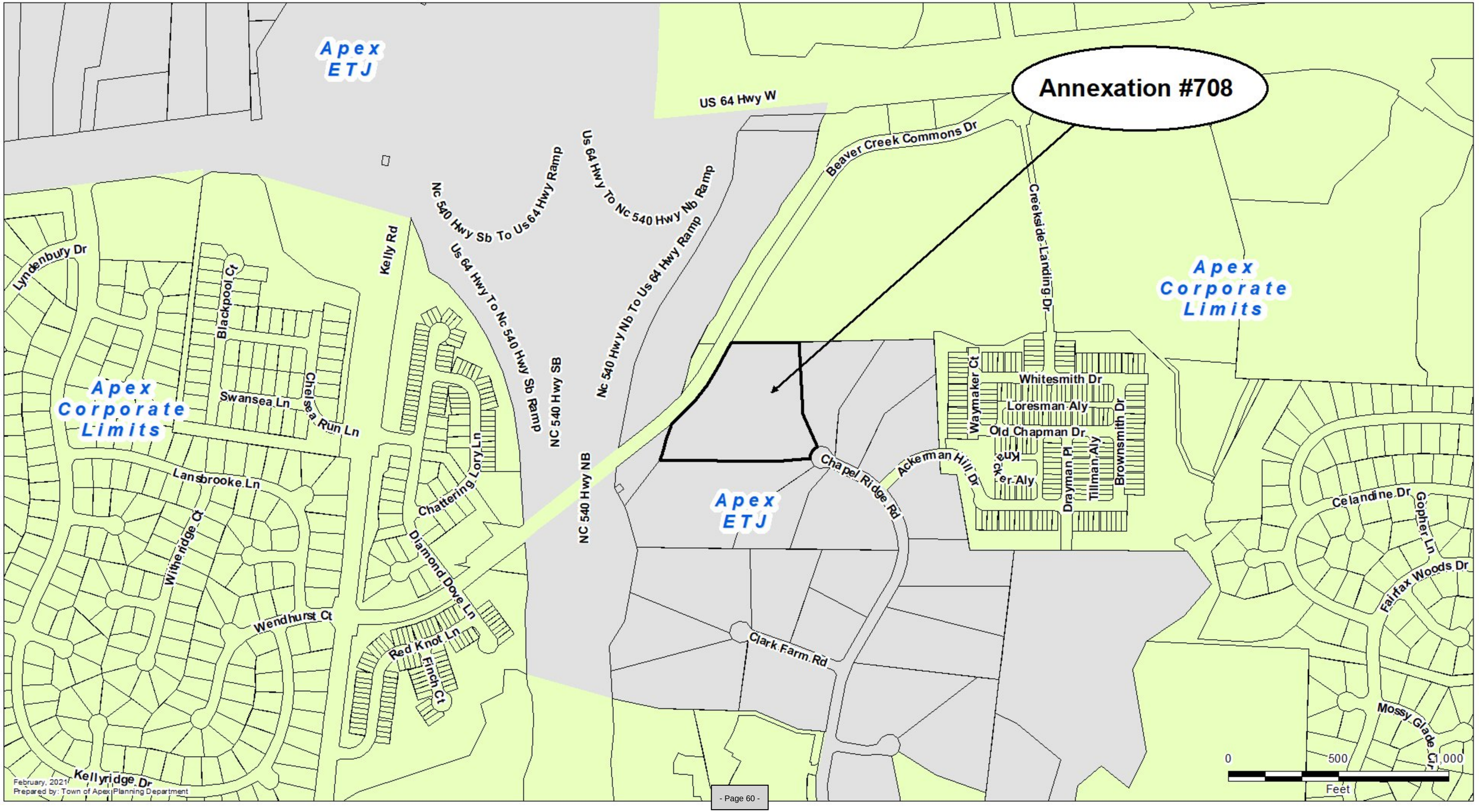
Annexation #708
Apex ETJ
Apex Corporate Limits
US 64 Hwy W
Nc 540 Hwy Sb To Us 64 Hwy Ramp
Us 64 Hwy To Nc 540 Hwy Nb Ramp
Us 64 Hwy To Nc 540 Hwy Sb Ramp
Nc 540 Hwy Nb To Us 64 Hwy Ramp
NC 540 Hwy SB
NC 540 Hwy NB
Beaver Creek Commons Dr
Creekside Landing Dr
Kelly Rd
Lyndenbury Dr
Blackpool Ct
Swansea Ln
Chelsea Run Ln
Lansbrooke Ln
Witheridge Ct
Wendhurst Ct
Kellyridge Dr
Chattering Lory Ln
Diamond Dove Ln
Red Knot Ln
Finch Ct
Chapel Ridge Rd
Ackerman Hill Dr
Clark Farm Rd
Waymaker Ct
Whitesmith Dr
Loresman Aly
Old Chapman Dr
Knapper Aly
Drayman Pl
Tillman Aly
Brownsmith Dr
Celandine Dr
Gopher Ln
Fairfax Woods Dr
Mossy Glade Ct
0
500
1,000
Feet
February, 2021
Prepared by: Town of Apex Planning Department

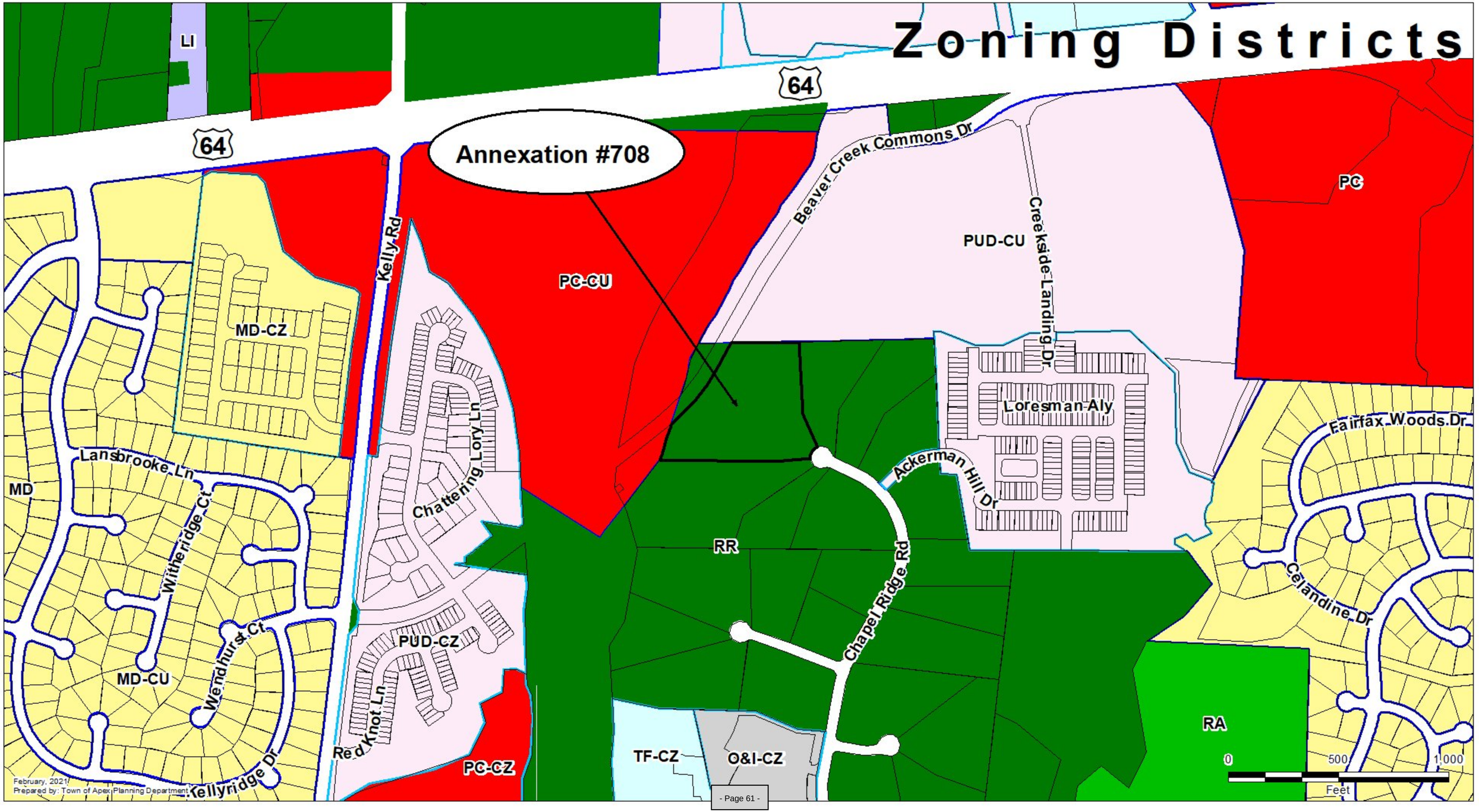
Zoning Districts
Annexation #708
LI
64
64
Kelly Rd
Beaver Creek Commons Dr
Creekside Landing Dr
PC
PUD-CU
PC-CU
MD-CZ
Loresman Aly
Fairfax Woods Dr
Lansbrooke Ln
Chattering Lory Ln
Ackerman Hill Dr
MD
Witheridge Ct
RR
Chapel Ridge Rd
Celandine Dr
PUD-CZ
Wendhurst Ct
MD-CU
Red Knot Ln
RA
TF-CZ
O&I-CZ
PC-CZ
Kellyridge Dr
February, 2021
Prepared by: Town of Apex Planning Department
0
500
1,000
Feet

Legal Description
Jordan Lutheran Church, Inc.

BEGINNING at an existing iron pipe having NC Grid Coordinates of N - 725,229.62 E - 2,033,153.88 NAD 83(2012B),on the western right of way of Chapel Ridge Road, and being North 65 degrees 04 minutes 24 seconds West - 345.50 feet from the intersection of Chapel Ridge Road and Ackerman Hill Drive:
Thence South 84 degrees 44 minutes 16 seconds West - 165.05 feet to an existing iron pipe;
Thence crossing a pond, North 89 degrees 19 minutes 00 seconds West - 516.35 feet to an iron stake set;
Thence North 14 degrees 02 minutes 35 seconds East- 49.56 feet to an iron stake set;
Thence North 19 degrees 52 minutes 06 seconds East - 68.19 feet to an iron stake set;
Thence North 19 degrees 14 minutes 38 seconds East - 62.17 feet to an iron stake set, on the southern right of way of Beaver Creek Commons Drive;
Thence along said right of way, along a curve to the left having a radius of 889.50 feet, an arc length of 316.35 feet, a chord bearing and distance of North 39 degrees 21 minutes 36 seconds East- 314.69 feet to an iron stake set;
Thence along said right of way, North 29 degrees 10 minutes 16 seconds East- 133.27 feet to an iron stake set;
Thence leaving said right of way, North 88 degrees 41 minutes 57 seconds East - 308.19 feet to an existing iron pipe, the comer between Lot 4 and Lot 5;
Thence the following calls along the lot line between Lot 4 and Lot 5:
South 03 degrees 08 minutes 46 seconds East- 329.74 feet to an existing iron pipe;
South 23 degrees 19 minutes 50 seconds East - 162.12 feet to an iron stake set on the western right of way of Chapel Ridge Road;
Thence along the western right of way of Chapel Ridge Road along a curve to the left having a radius of 50.00 feet, an arc length of 62.76 feet, a chord bearing and distance of South 30 degrees 41 minutes 41 seconds West- 58.72 feet to an existing iron pipe, the point of BEGINNING, containing 6.22 acres more or less, and being the residual area of Lot 4 Chapel Ridge Subdivision, Phase II. As recorded in Book of Maps 1987 Page 556 in the Wake County Register of Deeds.

# | Agenda Item | cover sheet

for consideration by the Apex Town Council

Item Type: CONSENT AGENDA

Meeting Date: March 23, 2021

## Item Details

Presenter(s): Dianne Khin, Director of Planning and Community Development

Department(s): Planning and Community Development

Requested Motion

Motion to adopt a resolution Directing the Town Clerk to Investigate Petition Received, to accept the Certificate of Sufficiency by the Town Clerk and to adopt a Resolution Setting Date of Public Hearing for April 13, 2021 on the Question of Annexation – Apex Town Council's intent to annex MFW Investments, LLC (portion of PIN #0751 21 6689 located at 0 East Williams Street), Trinity Apex North 100, LLC (portion of PIN #0751 32 3228 located at 5125 Jessie Drive) and Horton Park MF, LLC (portion of PIN #0751 31 9308) located at 5101 Jessie Drive) properties (Horton Park PUD), as recorded in Book of Maps 2021 Pages 128-134 containing ±1.139 acres, Annexation #709 into the Town's corporate limits.

Approval Recommended?

Yes, by the Planning and Community Development Department.

Item Details

The Town Clerk certifies to the investigation of said annexation. Adoption of the Resolution authorizes the Town Clerk to advertise said public hearing by electronic means and on the Town of Apex's website. The annexation plat showing these three parcels was previously recorded on January 15, 2021 in Book of Maps 2021, Pages 128-134.

Attachments

- Annexation Petition
- Recorded plat Book of Maps 2021 Pages 128-134
- Vicinity Maps
- Resolution Directing the Town Clerk to Investigate Petition
- Certificate of Sufficiency by the Town Clerk
- Resolution Setting Date of Public Hearing

RESOLUTION DIRECTING THE TOWN CLERK
TO INVESTIGATE PETITION RECEIVED UNDER G.S.§ 160A-31

Annexation Petition#709
MFW Investments, LLC, Trinity Apex North 100, LLC, and Horton Park MF, LLC

WHEREAS, G.S. §160-A 31 provides that the sufficiency of the petition shall be investigated by the Town Clerk before further annexation proceedings may take place; and

WHEREAS, the Town Council of the Town of Apex deems it advisable to proceed in response to this request for annexation;

NOW, THEREFORE, BE IT RESOLVED by the Town Council of the Town of Apex, that the Town Clerk is hereby directed to investigate the sufficiency of the above-described petition and to certify to the Town Council the result of her investigation.

This the 23rd day of March 2021.

_____
Jacques K. Gilbert
Mayor

ATTEST:

_____
Donna B. Hosch, MMC, NCCMC
Town Clerk

CERTIFICATE OF SUFFICIENCY BY THE TOWN CLERK

Annexation Petition #709
MFW Investments, LLC, Trinity Apex North 100, LLC, and Horton Park MF, LLC

**To: The Town Council of the Town of Apex, North Carolina**

I, Donna B. Hosch, Town Clerk, do hereby certify that I have investigated the annexation petition attached hereto, and have found, as a fact, that said petition is signed by all owners of real property lying in the area described therein, in accordance with G.S.§ 160A-31, as amended.

IN WITNESS WHEREOF, I have hereunto set my hand and affixed the seal of the Town of Apex, North Carolina this 23rd day of March 2021.

_____
Donna B. Hosch, MMC, NCCMC
Town Clerk

(Seal)

# PETITION FOR VOLUNTARY ANNEXATION

This document is a public record under the North Carolina Public Records Act and may be published on the Town's website or disclosed to third parties.

Application #: 709 Submittal Date: 3/5/2021

Fee Paid $ 200 Check # 1394

## TO THE TOWN COUNCIL APEX, NORTH CAROLINA

1. We, the undersigned owners of real property, respectfully request that the area described in Part 4 below be annexed to the Town of Apex, Wake County, North Carolina.
2. The area to be annexed is ■ contiguous, ☐ non-contiguous (satellite) to the Town of Apex, North Carolina and the boundaries are as contained in the metes and bounds description attached hereto.
3. If contiguous, this annexation will include all intervening rights-of-way for streets, railroads, and other areas as stated in G.S. 160A-31(f), unless otherwise stated in the annexation amendment.

## OWNER INFORMATION

| | |
|---|---|
| MFW Investments LLC<br>Owner Name (Please Print) | PIN 0751-21-6689 (portion)<br>Property PIN or Deed Book & Page # |
| (919) 801-3905<br>Phone | mwhitehead@macgregordev.com<br>E-mail Address |
| Owner Name (Please Print) | Property PIN or Deed Book & Page # |
| Phone | E-mail Address |
| Owner Name (Please Print) | Property PIN or Deed Book & Page # |
| Phone | E-mail Address |

## SURVEYOR INFORMATION

Surveyor: Bateman Civil Survey Company

Phone: (919) 577-1080 Fax: (919) 577-1081

E-mail Address: heath@batemancivilsurvey.com

## ANNEXATION SUMMARY CHART

**Property Information**

| | |
|---|---|
| Total Acreage to be annexed: | 0.51 acres |
| Population of acreage to be annexed: | 0 |
| Existing # of housing units: | 0 |
| Proposed # of housing units: | 0 |
| Zoning District*: | RA |

**Reason(s) for annexation (select all that apply)**

| | |
|---|---|
| Need water service due to well failure | ☐ |
| Need sewer service due to septic system failure | ☐ |
| Water service (new construction) | ☐ |
| Sewer service (new construction) | ☐ |
| Receive Town Services | ☑ |

*If the property to be annexed is not within the Town of Apex's Extraterritorial Jurisdiction, the applicant must also submit a rezoning application with the petition for voluntary annexation to establish an Apex zoning designation. Please contact the Planning Department for questions.

## PETITION FOR VOLUNTARY ANNEXATION

Application #: 709 Submittal Date: 3/5/2021

### COMPLETE IF IN A LIMITED LIABILITY COMPANY

In witness whereof, MFW Investments, LLC a limited liability company, caused this instrument to be executed in its name by a member/manager pursuant to authority duly given, this the 17th day of February, 2021.

Name of Limited Liability Company MFW Investments, LLC

By: _____
Signature of Member/Manager

STATE OF NORTH CAROLINA
COUNTY OF WAKE

Sworn and subscribed before me, Rhonda Muhaluk, a Notary Public for the above State and County, this the 17th day of, February, 2021.

Rhonda Muhaluk
Notary Public

SEAL

RHONDA MUHALUK
Notary Public
Carteret Co., North Carolina
My Commission Expires Aug. 19, 2024

My Commission Expires: Aug. 19, 2024

### COMPLETE IF IN A PARTNERSHIP

In witness whereof, _____, a partnership, caused this instrument to be executed in its name by a member/manager pursuant to authority duly given, this the _____ day of _____, 20_____.

Name of Partnership _____

By: _____
Signature of General Partner

STATE OF NORTH CAROLINA
COUNTY OF WAKE

Sworn and subscribed before me, _____, a Notary Public for the above State and County, this the _____day of _____, 20____.

_____
Notary Public

SEAL

My Commission Expires: _____

# PETITION FOR VOLUNTARY ANNEXATION

This document is a public record under the North Carolina Public Records Act and may be published on the Town's website or disclosed to third parties.

Application #: 709 Submittal Date: 3/5/2021

Fee Paid $ Check #

## TO THE TOWN COUNCIL APEX, NORTH CAROLINA

1. We, the undersigned owners of real property, respectfully request that the area described in Part 4 below be annexed to the Town of Apex, Wake County, North Carolina.
2. The area to be annexed is ■ contiguous, ☐ non-contiguous (satellite) to the Town of Apex, North Carolina and the boundaries are as contained in the metes and bounds description attached hereto.
3. If contiguous, this annexation will include all intervening rights-of-way for streets, railroads, and other areas as stated in G.S. 160A-31(f), unless otherwise stated in the annexation amendment.

## OWNER INFORMATION

| | |
|---|---|
| Trinity Apex North 100, LLC<br>Owner Name (Please Print) | PIN 0751-32-3228 (portion)<br>Property PIN or Deed Book & Page # |
| 919-356-7272<br>Phone | CHETMANN@GMAIL.COM<br>E-mail Address |
| CHET MANN<br>Owner Name (Please Print) | 0751323228<br>Property PIN or Deed Book & Page # |
| 919-777-0114<br>Phone | E-mail Address |
| Owner Name (Please Print) | Property PIN or Deed Book & Page # |
| Phone | E-mail Address |

## SURVEYOR INFORMATION

Surveyor: Bateman Civil Survey Company

Phone: (919) 577-1080 Fax: (919) 577-1081

E-mail Address: heath@batemancivilsurvey.com

## ANNEXATION SUMMARY CHART

| Property Information | | Reason(s) for annexation (select all that apply) | |
|---|---|---|---|
| Total Acreage to be annexed: | 0.332 acres | Need water service due to well failure | ☐ |
| Population of acreage to be annexed: | 0 | Need sewer service due to septic system failure | ☐ |
| Existing # of housing units: | 0 | Water service (new construction) | ☐ |
| Proposed # of housing units: | 0 | Sewer service (new construction) | ☐ |
| Zoning District*: | LI-CZ | Receive Town Services | ☑ |

*If the property to be annexed is not within the Town of Apex's Extraterritorial Jurisdiction, the applicant must also submit a rezoning application with the petition for voluntary annexation to establish an Apex zoning designation. Please contact the Planning Department for questions.

## PETITION FOR VOLUNTARY ANNEXATION

Application #: 709 Submittal Date: 3/5/2021

### COMPLETE IF IN A LIMITED LIABILITY COMPANY

In witness whereof, Trinity Apex North 100 LLC a limited liability company, caused this instrument to be executed in its name by a member/manager pursuant to authority duly given, this the 24 day of February, 2021.

Name of Limited Liability Company Trinity Apex North 100, LLC

By: _____
Signature of Member/Manager

STATE OF NORTH CAROLINA
COUNTY OF WAKE

Sworn and subscribed before me, Andrea T. Waters a Notary Public for the above State and County, this the 24 day of, February, 2021.

Andrea T. Waters
Notary Public

SEAL

ANDREA T. WATERS NOTARY PUBLIC WAKE COUNTY, NC

My Commission Expires: 1/22/2024

### COMPLETE IF IN A PARTNERSHIP

In witness whereof, _____, a partnership, caused this instrument to be executed in its name by a member/manager pursuant to authority duly given, this the _____ day of _____, 20____.

Name of Partnership _____

By: _____
Signature of General Partner

STATE OF NORTH CAROLINA
COUNTY OF WAKE

Sworn and subscribed before me, _____, a Notary Public for the above State and County, this the _____day of _____, 20____.

_____
Notary Public

SEAL

My Commission Expires: _____

## PETITION FOR VOLUNTARY ANNEXATION

This document is a public record under the North Carolina Public Records Act and may be published on the Town's website or disclosed to third parties.

Application #: 709 Submittal Date: 3/5/2021

Fee Paid $ Check #

## TO THE TOWN COUNCIL APEX, NORTH CAROLINA

1. We, the undersigned owners of real property, respectfully request that the area described in Part 4 below be annexed to the Town of Apex, Wake County, North Carolina.
2. The area to be annexed is ■ contiguous, ☐ non-contiguous (satellite) to the Town of Apex, North Carolina and the boundaries are as contained in the metes and bounds description attached hereto.
3. If contiguous, this annexation will include all intervening rights-of-way for streets, railroads, and other areas as stated in G.S. 160A-31(f), unless otherwise stated in the annexation amendment.

## OWNER INFORMATION

| | |
|---|---|
| Horton Park MF LLC<br>Owner Name (Please Print) | PIN 0751-31-9308 (portion)<br>Property PIN or Deed Book & Page # |
| (919) 880-0832<br>Phone | tdrake31@gmail.com<br>E-mail Address |
| Owner Name (Please Print) | Property PIN or Deed Book & Page # |
| Phone | E-mail Address |
| Owner Name (Please Print) | Property PIN or Deed Book & Page # |
| Phone | E-mail Address |

## SURVEYOR INFORMATION

Surveyor: Bateman Civil Survey Company

Phone: (919) 577-1080 Fax: (919) 577-1081

E-mail Address: heath@batemancivilsurvey.com

## ANNEXATION SUMMARY CHART

| Property Information | | Reason(s) for annexation (select all that apply) | |
|---|---|---|---|
| Total Acreage to be annexed: | 0.297 acres | Need water service due to well failure | ☐ |
| Population of acreage to be annexed: | 0 | Need sewer service due to septic system failure | ☐ |
| Existing # of housing units: | 0 | Water service (new construction) | ☐ |
| Proposed # of housing units: | 0 | Sewer service (new construction) | ☐ |
| Zoning District*: | PUD-CZ | Receive Town Services | ☑ |

*If the property to be annexed is not within the Town of Apex's Extraterritorial Jurisdiction, the applicant must also submit a rezoning application with the petition for voluntary annexation to establish an Apex zoning designation. Please contact the Planning Department for questions.

## PETITION FOR VOLUNTARY ANNEXATION

Application #: 709 Submittal Date: 3/5/2021

### COMPLETE IF IN A LIMITED LIABILITY COMPANY

In witness whereof, Horton Park MF LLC a limited liability company, caused this instrument to be executed in its name by a member/manager pursuant to authority duly given, this the 23 day of February, 2021.

Name of Limited Liability Company Horton Park MF LLC

By: Thomas W. Drake
Signature of Member/Manager

STATE OF NORTH CAROLINA
COUNTY OF WAKE

Sworn and subscribed before me, Emily E. Ballard, a Notary Public for the above State and County, this the 23 day of February, 2021.

SEAL

EMILY E BALLARD NOTARY PUBLIC WAKE COUNTY, NC My Commission Expires 07-29-23

Emily E Ballard
Notary Public

My Commission Expires: 7.29.23

### COMPLETE IF IN A PARTNERSHIP

In witness whereof, _____, a partnership, caused this instrument to be executed in its name by a member/manager pursuant to authority duly given, this the _____ day of _____, 20____.

Name of Partnership _____

By: _____
Signature of General Partner

STATE OF NORTH CAROLINA
COUNTY OF WAKE

Sworn and subscribed before me, _____, a Notary Public for the above State and County, this the _____day of _____, 20____.

_____
Notary Public

SEAL

My Commission Expires: _____

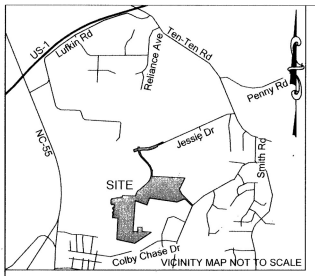


## REFERENCES

-Book Map 1942 Page 114
-Book Map 1987 Page 1199
-Book Map 1988 Page 754
-Book Map 2003 Page 1130
-Book Map 2006 Page 172
-Book Map 2015 Page 1973
-Book Map 2016 Page 1677
-Book Map 2016 Page 1902
-Book Map 2017 Page 1067
-Book Map 2017 Page 2004
-Book Map 2018 Page 1394
-Book Map 2018 Page 1751
-Deed Book 17511 Page 1752
-Deed Book 17511 Page 1755
-Deed Book 17473 Page 2443
-Deed Book 17279 Page 1698
-Deed Book 17211 Page 2706
-Deed Book 17139 Page 745
-Deed Book 16932 Page 295
-Deed Book 16638 Page 1192
-Deed Book 16215 Page 1702
-Deed Book 14735 Page 685
-Deed Book 4443 Page 94
-Deed Book 2353 Page 559



**Required Base Information:**

Project Information: MFW Investment LLC
0 E Williams Street, Apex, NC 27539 (Reid 0463860)
5220 Jessie Drive, Apex, NC 27539 (Reid 0012276)
5101 Jessie Drive, Apex, NC 27539 (Reid 0034313)
0 Dezola Street, Apex, NC 27539 (Reid 0203126)
8140 Smith Road, Apex, NC 27539 (Reid 0040550)
8306 Smith Road, Apex, NC 27539 (Reid 0033171)
0 Dezola Street, Apex, NC 27539 (Reid 0203135)
8252 Smith Road, Apex, NC 27539 (Reid 0089614)
Owner Information: MFW Investment LLC
Mike Whitehead
114 Birklands Drive, Cary, NC, 27518
mwhitehead@macgregordev.com
Project Information: Trinity Apex North 100 LLC
5125 Jessie Drive, Apex, NC 27539 (Reid 0099938)
Owner Information: Trinity Apex North 100 LLC
106 Island View Drive, Beaufort, NC, 28516
fill in the blank@whoknows.com
Project Information: Mary Elizabeth Horton
0 Dezola Street, Apex, NC 27539 (Reid 0434123)
Owner Information: Mary Elizabeth Horton
PO Box 306, Apex, NC, 27539
fill in the blank@whoknows.com
Project Information: MFWIRA LLC
0 Dezola Street, Apex, NC 27539 (Reid 0449641)
Owner Information: MFWIRA LLC
Mike Whitehead
114 Birklands Drive, Cary, NC, 27518
mwhitehead@macgregordev.com
Project Information: Kimberly A & Loomis Horton III
0 Dezola Street, Apex, NC 27539 (Reid 0457588)
Owner Information: Kimberly A & Loomis Horton III
4801 SW 202nd Avenue, Southwest Ranches, FL, 33332
mwhitehead@macgregordev.com
Project Information: Kimberly A & Loomis Horton III
8308 Smith Road, Apex, NC 27539 (Reid 0033292)
Owner Information: Kimberly A & Loomis Horton III
4801 SW 202nd Avenue, Southwest Ranches, FL, 33332
mwhitehead@macgregordev.com
Project Information: Dwight Marvin Wright
5010 Dezola Street, Apex, NC 27539 (Reid 0104750)
Owner Information: Dwight Marvin Wright
407 S Salem Street, Apex, NC, 27539
mwhitehead@macgregordev.com

Surveyor Information: Jeffrey W. Baker
North Carolina
L-4412
Date of Survey & Plat Preparation: 3/24/2020
Zoning District & Zoning Case #: PUD-CZ
Setbacks: PUD-CZ
Single Family: Front: 25'
Side: 6' minimum 16' total
Corner: 15'
Rear: 20'
Minimum Lot Width: 50'
Township, County, State: White Oak, Wake, North Carolina
Primary or Secondary Watershed: Secondary - Middle Creek Basin
FEMA designated floodplain: 'X' per F.I.R.M #3720075100J dated 05/02/2006

| Owner | PIN# | REID# | Deed Reference | Plat Reference | Use | Zoning |
|---|---|---|---|---|---|---|
| A) MFW Investments LLC - | 0750278925 - 0089614 - | | DB 17473, Pg 2443 - | BM 1988, Pg 754, - | Vacant - | PUD-CZ |
| B) MFW Investments LLC - | 0750278677 - 0203135 - | | DB 17511, Pg 1752 - | BM 1988, Pg 754, - | Vacant - | PUD-CZ |
| C) Timothy & Allison Felton - | 0750278301 - 0308838 - | | DB 17376, Pg 1337 - | BM 2003, Pg 1130, - | Single Family - | RR |
| D) John J & Joyce T Falchi - | 0750279358 - 0308837 - | | DB 10836, Pg 2123 - | BM 2003, Pg 1130, - | Single Family - | RR |
| E) Todd C & Gloria C Young - | 0750370454 - 0308836 - | | DB 11069, Pg 476 - | BM 2003, Pg 1130, - | Single Family - | RR |
| F) Dennis & Roberta Dale - | 0750371540 - 0308835 - | | DB 11800, Pg 97 - | BM 2003, Pg 1130, - | Single Family - | RR |
| G) Richard J & Mary A Stewart - | 0750372555 - 0308834 - | | DB 11012, Pg 2141 - | BM 2003, Pg 1130, - | Single Family - | RR |
| H) Robert E & Krista B Cathey III - | 0750373664 - 0308833 - | | DB 11988, Pg 1801 - | BM 2003, Pg 1130, - | Single Family - | RR |
| I) Amanda C & Steven A Rhodes - | 0750375700 - 0308832 - | | DB 12006, Pg 1186 - | BM 2003, Pg 1130, - | Single Family - | RR |

"I, Jeffrey W. Baker, certify that this plat was drawn under my supervision from an actual survey made under my supervision (deed description recorded in Book 17511, page 1752, Book 17511, page 1755, Book 17473, page 2443, Book 17279, page 1698, Book 17211, page 2706, Book 17139, page 745, Book 16932, page 295, Book 16638, page 1192, Book 16215, page 1702, Book 14735, page 685, Book 4443, page 94, Book 2353, page 559); that the boundaries not surveyed are clearly indicated as drawn from information found in Book 1942, page 114, Book 1987, Page 1199, Book 1988, page 754, Book 2003, page 1130, Book 2006, page 172, Book 2015, page 1973, Book 2016, page 1677, Book 2016, page 1902, Book 2017, page 1067, Book 2017, page 2004, Book 2018, page 1394, Book 2018, page 1751; that the ratio of precision or positional accuracy as calculated is 1:10000+; that this plat was prepared in accordance with G.S. 47-30 as amended. witness my origiral signature, license number and seal this 25th day of June, A.D. 2020."

Professional Land Surveyor
License Number-4412

***I, Jeffrey W. Baker, Professional Land Surveyor No. L-4412 certify D. That the survey is of another category, such as the recombination of existing parcels, a court-ordered survey, or other exceptions to the definition of subdivision.***

*Jeffrey W. Baker, PLS L-4412* 6/25/2020 *date*

NORTH CAROLINA PROFESSIONAL SEAL L-4412 LAND SURVEYOR JEFFREY W. BAKER

WAKE COUNTY, NC 85
TAMMY L. BRUNNER
REGISTER OF DEEDS
PRESENTED & RECORDED ON
01/15/2021 13:09:03
BOOK:BM2021 PAGE:00128

GRAPHIC SCALE
400 200 0 400
( IN FEET )
1 inch = 400 ft.

Class of Survey: D
Positional Accuracy: 0.02'
Date of Survey: July, 2017
Datum/Epoch: NAD83/NSRS2011
Geoid Model: 12B
Combined Grid Factors: 0.99988461
Units: US Survey Feet

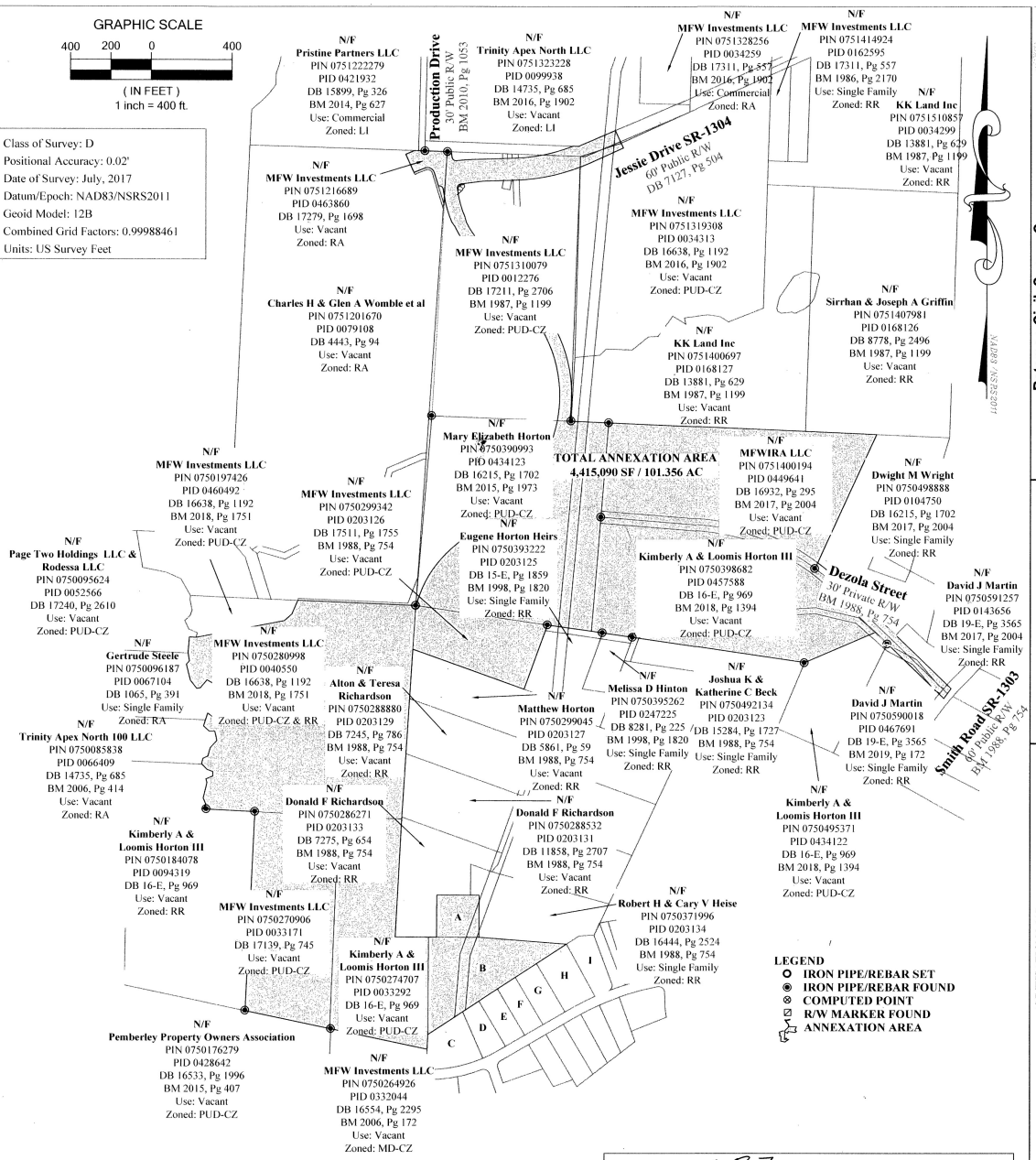


**LEGEND**
- IRON PIPE/REBAR SET
- IRON PIPE/REBAR FOUND
- COMPUTED POINT
- R/W MARKER FOUND
- ANNEXATION AREA

**NOTES:**

1. This survey was prepared by Bateman Civil Survey Co., under the supervision of Jeffrey W. Baker, PLS.
2. This plan has been prepared for layout and permitting purposes only.
3. Property lines shown were taken from existing field evidence, existing deeds and/or plats of public record, and information supplied to the surveyor by the client
4. All distances are horizontal ground distances and all bearings are North Carolina State Plane Coordinate System unless otherwise shown.
5. No investigation into the existence of jurisdictional wetlands or riparian buffers performed by this firm.
6. Surveyor has made no investigation or independent search for easements of record, encumbrances, restrictive covenants, ownership title evidence or any other facts that an accurate and current title search may disclose.
7. No Grid Monuments found within 2000'.
8. Tied to the National CORS Network through NC VRS.

ANNEXATION # 6087 . I Donna B. Hosch, MMC, NCCMC, Town Clerk, Apex, North Carolina certify this is a true and exact map of annexation adopted the 15 day of DECe , 2020 by the Town Council. I set my hand and seal of the Town of Apex, 17 12 20 Day / Month / Year

Donna B. Hosch, MMC, NCCMC, Town Clerk

UNLESS THIS MAP IS SIGNED AND SEALED BY THE SURVEYOR IN CHARGE, THIS MAP IS CONSIDERED PRELIMINARY AND NOT TO BE USED FOR RECORDING, CONVEYANCE OR SALES

APEX NORTH CAROLINA 1873 INCORPORATED

**Bateman Civil Survey Company**
Engineers ● Surveyors ● Planners
2524 Reliance Ave, Apex, NC 27539
Phone: 919.577.1080 Fax: 919.577.1081
NCBELS FIRM No. C-2378

OWNER
MFW INVESTMENTS LLC
114 BIRKLANDS DRIVE
CARY, NORTH CAROLINA, 27518

ANNEXATION MAP
FOR THE TOWN OF APEX
APEX, NC, WAKE COUNTY, WHITE OAK TOWNSHIP
REID# 0099938, 0463860, 0034313, 0012276, 0434123, 0449641, 0457588, 0040550, 0203126, 0033171, 0033292, 0089614 & 0203135

Designed By: N/A
Drawn By: JCH
Checked By: JWB
Scale: 1"=400'
Date: 03/24/2020
Project #:180585

SHEET 1 OF 7

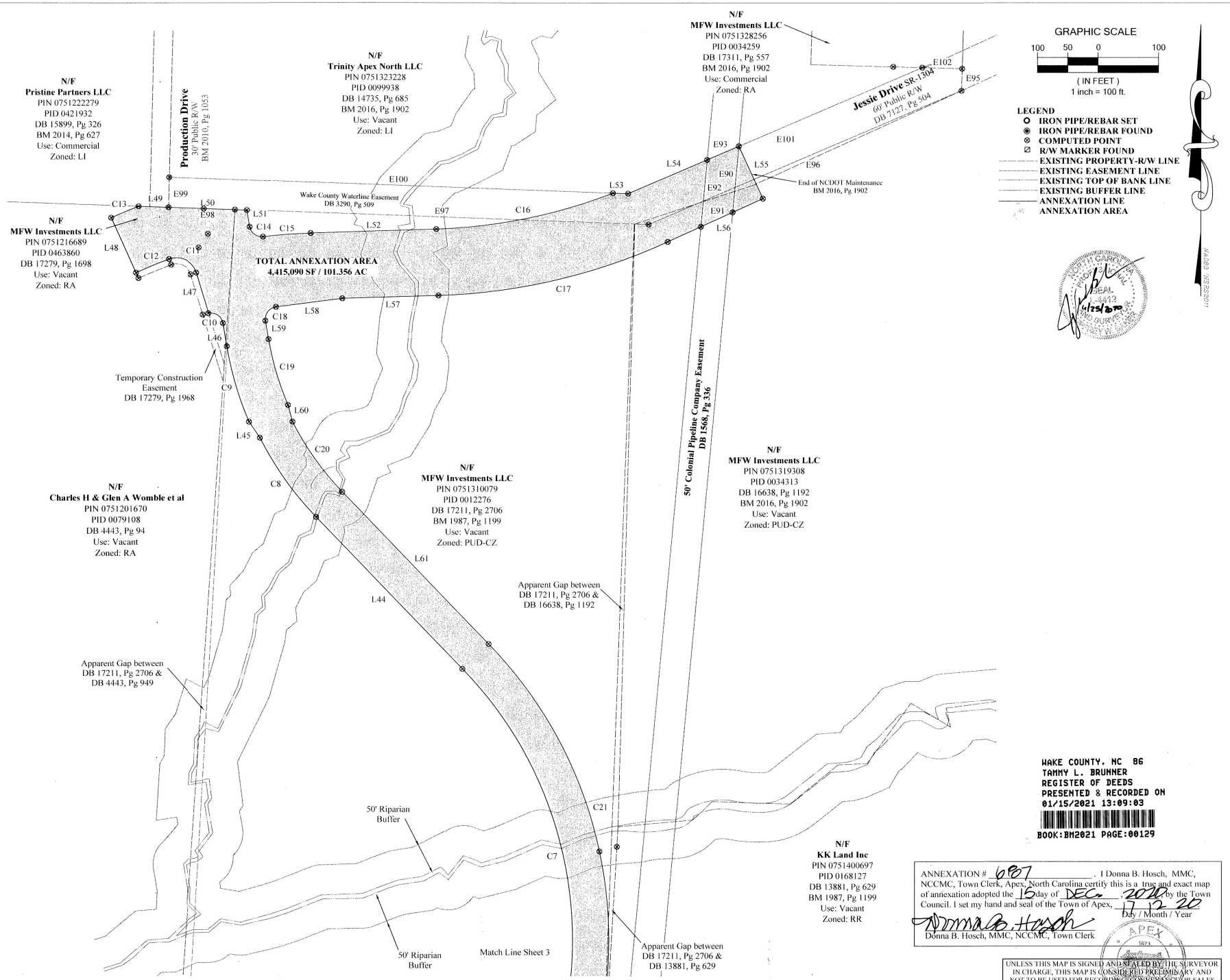


WAKE COUNTY, NC 86
TAMMY L. BRUNNER
REGISTER OF DEEDS
PRESENTED & RECORDED ON
01/15/2021 13:09:03
BOOK:BM2021 PAGE:00129

ANNEXATION # 6807. I Donna B. Hosch, MMC, NCCMC, Town Clerk, Apex, North Carolina certify this is a true and exact map of annexation adopted the 15 day of DEC. 2020 by the Town Council. I set my hand and seal of the Town of Apex, 12-22-20 Day / Month / Year

Donna B. Hosch, MMC, NCCMC, Town Clerk

APEX NORTH CAROLINA 1871

UNLESS THIS MAP IS SIGNED AND SEALED BY THE SURVEYOR IN CHARGE, THIS MAP IS CONSIDERED PRELIMINARY AND NOT TO BE USED FOR RECORDING, CONVEYANCE OR SALES

Bateman Civil Survey Company
Engineers ● Surveyors ● Planners
2524 Reliance Ave., Apex, NC 27539
Phone: 919.577.1080 Fax: 919.577.1081
NCBELS FIRM No. C-2378

OWNER
MFW INVESTMENTS LLC
114 BIRKLANDS DRIVE
CARY, NORTH CAROLINA, 27518

ANNEXATION MAP
FOR THE TOWN OF APEX
APEX, NC, WAKE COUNTY, WHITE OAK TOWNSHIP
REID# 0099938, 0463860, 0034313, 0012276, 0434123, 0449641, 0457588, 0040550, 0203126, 0033171, 0033292, 0089614 & 0203135

| | |
|---|---|
| Designed By: | N/A |
| Drawn By: | JCH |
| Checked By: | JWB |
| Scale: | 1"=100' |
| Date: | 03/24/2020 |
| Project #: | 180585 |

SHEET
2 OF 7

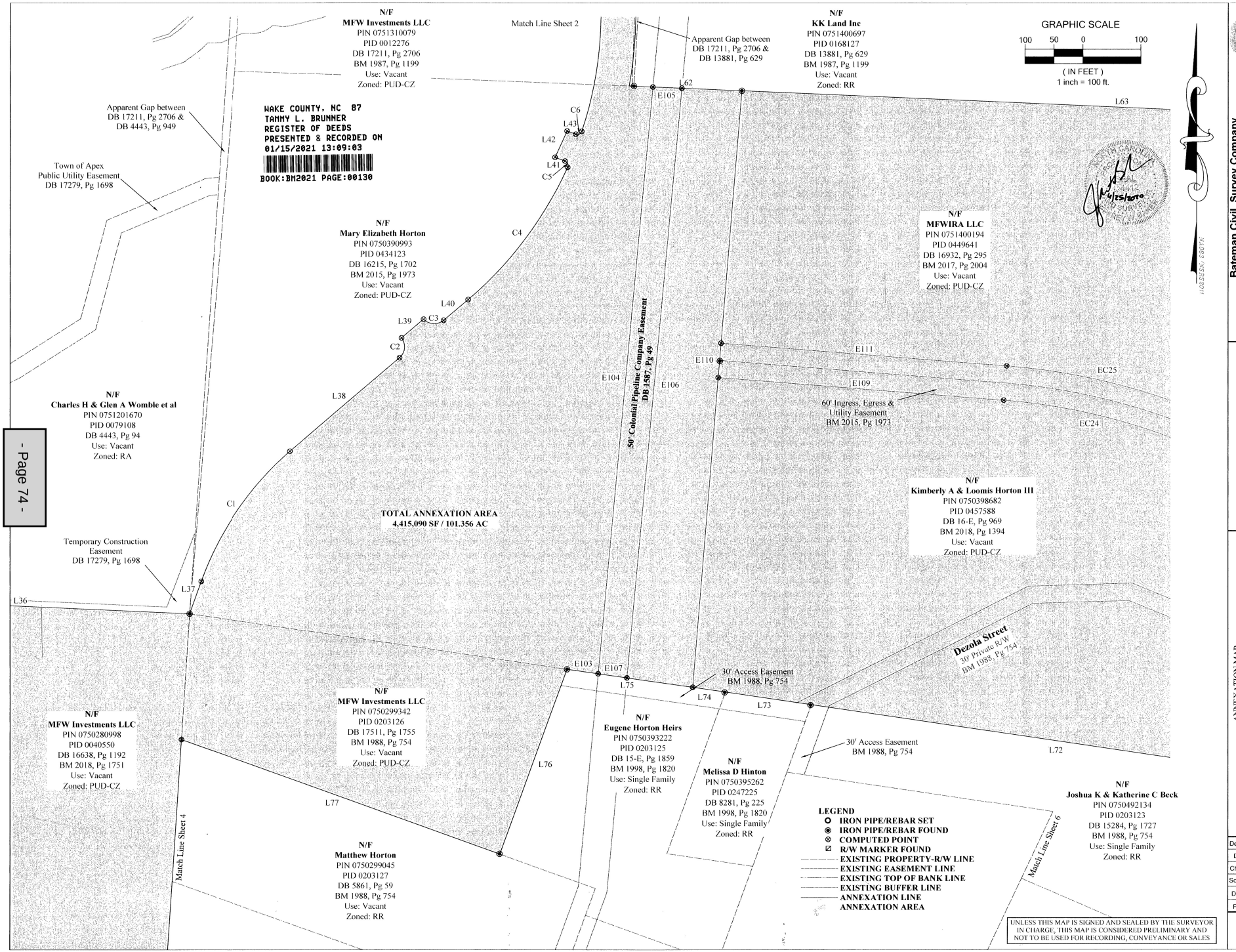


Bateman Civil Survey Company
Engineers ● Surveyors ● Planners
2524 Reliance Ave., Apex, NC 27539
Phone: 919.577.1080 Fax: 919.577.1081
NCBELS FIRM No. C-2378

OWNER
MFW INVESTMENTS LLC
114 BIRKLANDS DRIVE
CARY, NORTH CAROLINA, 27518

ANNEXATION MAP
FOR THE TOWN OF APEX
APEX, NC, WAKE COUNTY, WHITE OAK TOWNSHIP
REID# 0099938, 0463860, 0034313, 0012276, 0434123, 0449641, 0457588, 0040550, 0203126, 0033171, 0033292, 0089614 & 0203135

| |
|---|
| Designed By: N/A |
| Drawn By: JCH |
| Checked By: JWB |
| Scale: 1"=100' |
| Date: 03/24/2020 |
| Project #:180585 |

SHEET
3 OF 7

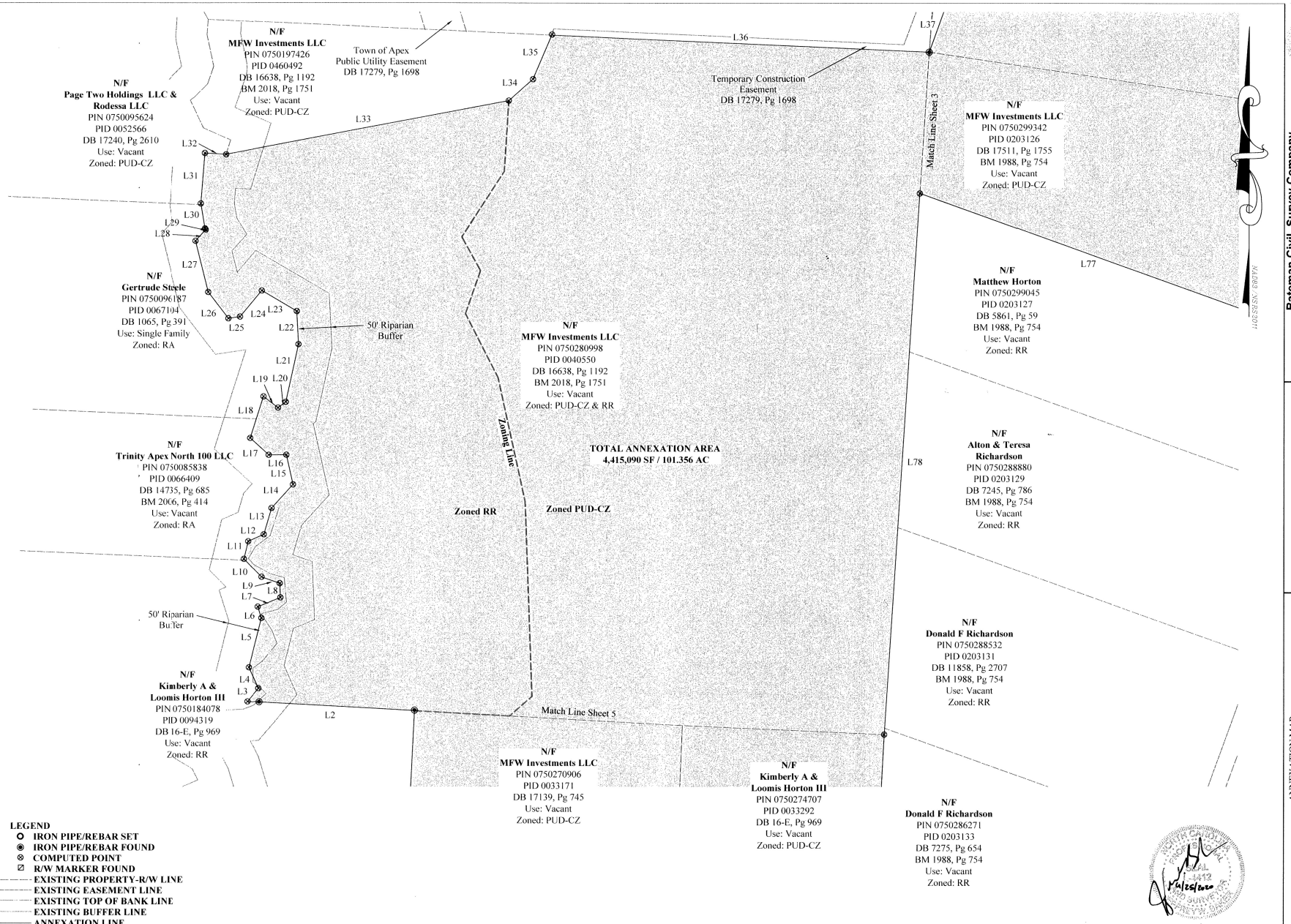


**LEGEND**

- IRON PIPE/REBAR SET
- IRON PIPE/REBAR FOUND
- COMPUTED POINT
- R/W MARKER FOUND
- EXISTING PROPERTY-R/W LINE
- EXISTING EASEMENT LINE
- EXISTING TOP OF BANK LINE
- EXISTING BUFFER LINE
- ANNEXATION LINE
- ANNEXATION AREA

GRAPHIC SCALE

100 50 0 100

( IN FEET )
1 inch = 100 ft.

WAKE COUNTY, NC 88
TAMMY L. BRUNNER
REGISTER OF DEEDS
PRESENTED & RECORDED ON
01/15/2021 13:09:03

BOOK:BM2021 PAGE:00131

UNLESS THIS MAP IS SIGNED AND SEALED BY THE SURVEYOR IN CHARGE, THIS MAP IS CONSIDERED PRELIMINARY AND NOT TO BE USED FOR RECORDING, CONVEYANCE OR SALES

Bateman Civil Survey Company
Engineers ● Surveyors ● Planners
2524 Reliance Ave., Apex, NC 27539
Phone: 919.577.1080 Fax: 919.577.1081
NCBELS FIRM No. C-2378

OWNER
MFW INVESTMENTS LLC
114 BIRKLANDS DRIVE
CARY, NORTH CAROLINA, 27518

ANNEXATION MAP
FOR THE TOWN OF APEX
APEX, NC, WAKE COUNTY, WHITE OAK TOWNSHIP
REID# 0099938, 0463860, 0034313, 0012276, 0434123, 0449641, 0457588, 0040550, 0203126, 0033171, 0033292, 0089614 & 0203135

| | |
|---|---|
| Designed By: | N/A |
| Drawn By: | JCH |
| Checked By: | JWB |
| Scale: | 1"=100' |
| Date: | 03/24/2020 |
| Project #: | 180585 |

SHEET
4 OF 7

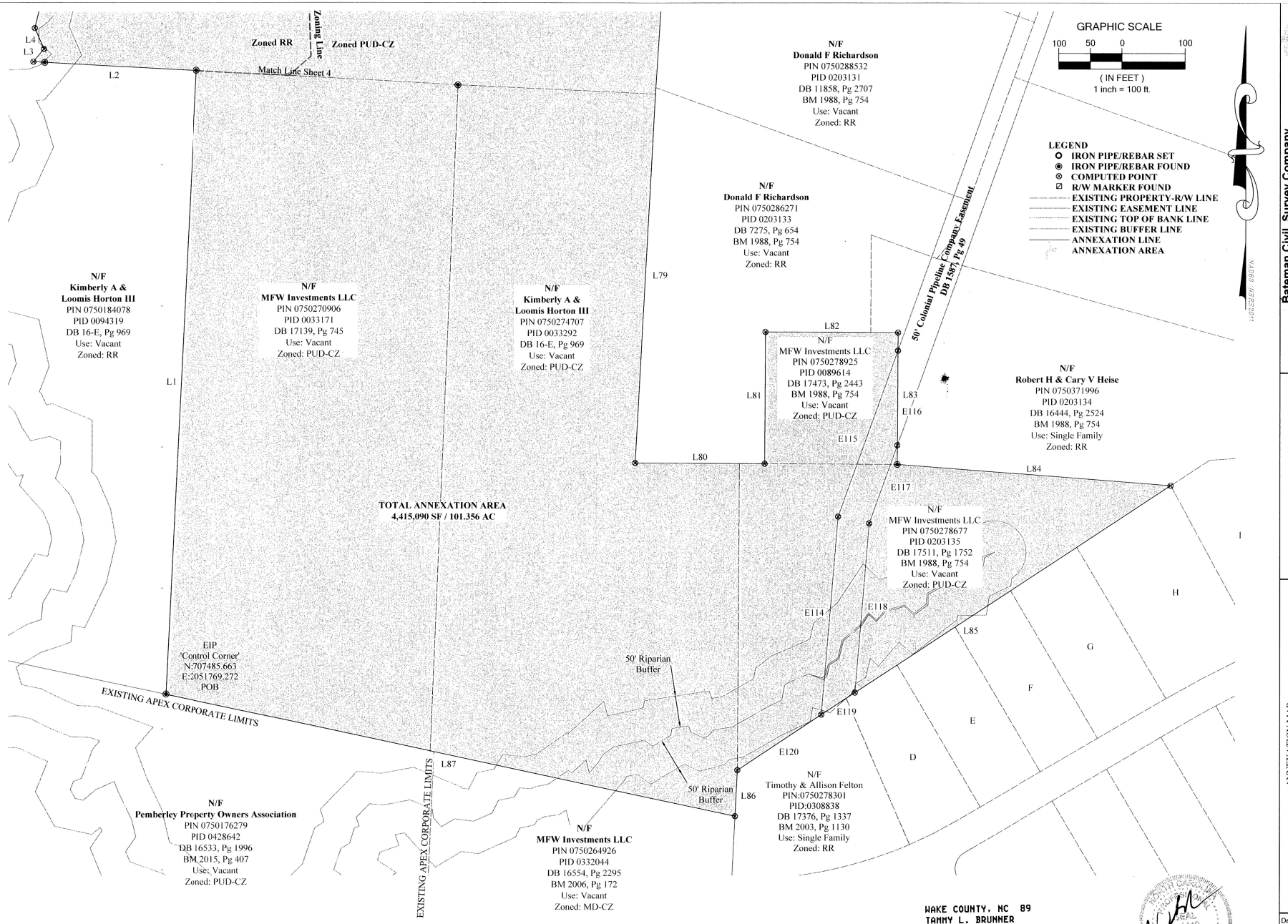


| Owner | PIN# | REID# | Deed Reference | Plat Reference | Use | Zoning |
|---|---|---|---|---|---|---|
| D) John J & Joyce T Falchi - | 0750279358 - | 0308837 - | DB 10836, Pg 2123 - | BM 2003, Pg 1130, - | Single Family - | RR |
| E) Todd C & Gloria C Young - | 0750370454 - | 0308836 - | DB 11069, Pg 476 - | BM 2003, Pg 1130, - | Single Family - | RR |
| F) Dennis & Roberta Dale - | 0750371540 - | 0308835 - | DB 11800, Pg 97 - | BM 2003, Pg 1130, - | Single Family - | RR |
| G) Richard J & Mary A Stewart - | 0750372555 - | 0308834 - | DB 11012, Pg 2141 - | BM 2003, Pg 1130, - | Single Family - | RR |
| H) Robert E & Krista B Cathey III - | 0750373664 - | 0308833 - | DB 11988, Pg 1801 - | BM 2003, Pg 1130, - | Single Family - | RR |
| I) Amanda C & Steven A Rhodes - | 0750375700 - | 0308832 - | DB 12006, Pg 1186 - | BM 2003, Pg 1130, - | Single Family - | RR |

WAKE COUNTY, NC 89
TAMMY L. BRUNNER
REGISTER OF DEEDS
PRESENTED & RECORDED ON
01/15/2021 13:09:03
BOOK:BM2021 PAGE:00132

4/25/2020

UNLESS THIS MAP IS SIGNED AND SEALED BY THE SURVEYOR IN CHARGE, THIS MAP IS CONSIDERED PRELIMINARY AND NOT TO BE USED FOR RECORDING, CONVEYANCE OR SALES

Bateman Civil Survey Company
Engineers ● Surveyors ● Planners
2524 Reliance Ave., Apex, NC 27539
Phone: 919.577.1080 Fax: 919.577.1081
NCBELS FIRM No. C-2378

OWNER
MFW INVESTMENTS LLC
114 BIRKLANDS DRIVE
CARY, NORTH CAROLINA, 27518

ANNEXATION MAP
FOR THE TOWN OF APEX
APEX, NC, WAKE COUNTY, WHITE OAK TOWNSHIP
REID# 0099938, 0463860, 0034313, 0012276, 0434123, 0449641, 0457588, 0040550, 0203126, 0033171, 0033292, 0089614 & 0203135

| | |
|---|---|
| Designed By: | N/A |
| Drawn By: | JCH |
| Checked By: | JWB |
| Scale: | 1"=100' |
| Date: | 03/24/2020 |
| Project #: | 180585 |

SHEET
5 OF 7

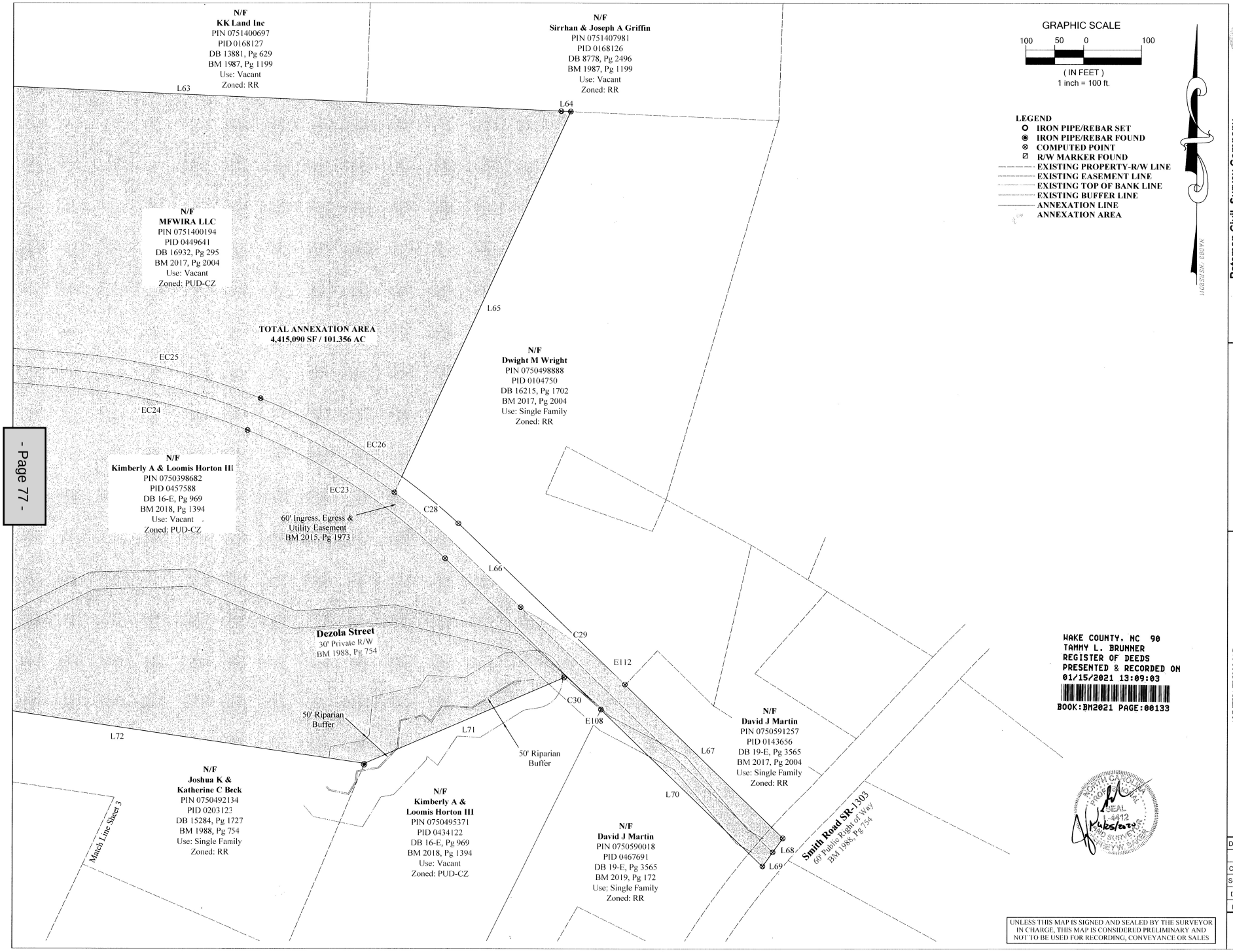


Bateman Civil Survey Company
Engineers ● Surveyors ● Planners
2524 Reliance Ave., Apex, NC 27539
Phone: 919.577.1080 Fax: 919.577.1081
NCBELS FIRM No. C-2378

OWNER
MFW INVESTMENTS LLC
114 BIRKLANDS DRIVE
CARY, NORTH CAROLINA, 27518

ANNEXATION MAP
FOR THE TOWN OF APEX
APEX, NC, WAKE COUNTY, WHITE OAK TOWNSHIP
REID# 0099938, 0463860, 0034313, 0012276, 0434123, 0449641, 0457588, 0040550, 0203126, 0033171, 0033292, 0089614 & 0203135

| | |
|---|---|
| Designed By: | N/A |
| Drawn By: | JCH |
| Checked By: | JWB |
| Scale: | 1"=100' |
| Date: | 03/24/2020 |
| Project #: | 180585 |

SHEET
6 OF 7

**Annexation Legal Description for REID# 0099938, 0463860, 0034313, 0012276, 0434123, 0449641, 0457588, 0040550, 0203126, 0033171, 0033292, 0089614 & 0203135**

All that certain parcels of land, situated in Apex, Wake County, North Carolina, being known as REID# 0099938, 0463860, 0034313, 0012276, 0434123, 0449641, 0457588, 0040550, 0203126, 0033171, 0033292, 0089614 & 0203135, Wake County Records, and being more particularly described as follows:

Beginning at an Iron Pipe found at the South West property corner of MFW Investments LLC (REID 0033171, DB 17139, PG 745), Wake County Records and South East property corner of Kimberly A & Loomis Horton III (REID 0094319, DB 16-E, PG 969), Wake County records and being designated as the Point of Beginning as shown on map made by Bateman Civil Survey Company, dated 3/24/2020 and entitled "Annexation Map for the Town of Apex" Apex, NC, Wake County, White Oak Township, REID# 0099938, 0463860, 0034313, 0012276, 0434123, 0449641, 0457588, 0040550, 0203126, 0033171, 0033292, 0089614 & 0203135, having State Plane Coordinates N:707485.663, E:2051769.272;
Thence N02°44'07"E, 994.82' to an Iron Pipe found; thence N86°50'22"W, 258.73' to an Iron Pipe found; thence N39°30'30"E, 26.26' to a point; thence N23°42'22"W, 35.95' to a point; thence N13°54'09"E, 79.15' to a point; thence N17°33'13"W, 18.56' to a point; thence N67°29'17"E, 37.85' to a point; thence N02°16'21"W, 22.18' to a point; thence N70°27'02"W, 29.99' to a point; thence N44°05'42"W, 39.31' to a point; thence N13°50'46"E, 28.19' to a point; thence N66°20'10"E, 26.21' to a point; thence N16°14'26"E, 42.75' to a point; thence N42°08'44"E, 49.37' to a point; thence N12°33'20"W, 47.21' to a point; thence S89°48'05"W, 27.39' to a point; thence N47°19'12"W, 39.00' to a point; thence N17°31'45"E, 67.92' to a point; thence S52°16'45"E, 28.62' to a point; thence N53°21'20"E, 14.91' to a point; thence N12°12'41"E, 91.90' to a point; thence N02°59'42"W, 51.52' to a point; thence N59°30'21"W, 62.80' to a point; thence S39°54'45"W, 52.49' to a point; thence S81°30'52"W, 18.15' to a point; thence N37°30'45"W, 51.54' to a point; thence N14°00'20"W, 81.92' to a point; thence N41°47'32"E, 23.66' to a point; thence N31°38'22"W, 1.96' to a point; thence N09°34'30"W, 39.41' to a point; thence N04°27'00"E, 78.83' to a point; thence S86°25'14"E, 33.05' to a point; thence N79°11'30"E, 445.19' to a point; thence N48°13'38"E, 50.09' to a point; thence N22°54'33"E, 74.47' to a point; thence S87°24'13"E, 584.86' to a point; thence N19°40'32"E, 59.76' to a point; thence a curve to the Right having a Radius of 540.00', a Length of 280.51' and a Direction of N34°33'25"E, 277.37' to a point; thence N49°26'19"E, 244.69' to a point; thence a curve to the Left having a Radius of 25.00', a Length of 38.27' and a Direction of N05°35'05"E, 34.64' to a point; thence N49°26'19"E, 50.04' to a point; thence a curve to the Right having a Radius of 25.00', a Length of 38.27' and a Direction of S86°42'27"E, 34.64' to a point; thence N49°26'19"E, 55.76' to a point; thence a curve to the Left having a Radius of 655.00', a Length of 288.86' and a Direction of N36°48'17"E, 286.52' to a point; thence a curve to the Left having a Radius of 8.00', a Length of 13.10' and a Direction of N22°43'53"W, 11.68' to a point; thence N69°38'01"W, 18.54' to a point; thence N24°32'45"E, 50.21' to a point; thence S69°38'01"E, 15.90' to a point; thence a curve to the Left having a Radius of 8.00', a Length of 12.85' and a Direction of N64°20'28"E, 11.51' to a point; thence a curve to the Left having a Radius of 655.00', a Length of 710.34' and a Direction of N12°45'08"W, 676.04' to a point; thence N43°49'14"W, 349.36' to a point; thence a curve to the Right having a Radius of 540.00', a Length of 161.66' and a Direction of N35°14'40"W, 161.05' to a point; thence N33°53'34"W, 32.27' to a point; thence a curve to the Right having a Radius of 545.00', a Length of 131.00' and a Direction of N16°24'52"W, 130.68' to a point; thence N09°31'44"W, 39.04' to a point; thence a curve to the Left having a Radius of 20.00', a Length of 32.64' and a Direction of N56°17'17"W, 29.14' to a point; thence N17°01'28"W, 70.37' to a point; thence a curve to the Left having a Radius of 35.00, a Length of 57.08' and a Direction of N63°44'30"W, 50.96' to a point; thence a curve to the Left having a Radius of 899.85', a Length of 59.13' and a Direction of S67°39'31"W, 59.12' to a point; thence N24°13'25"W, 100.00' to a point; thence a curve to the Right having a Radius of 1,000.00', a Length of 48.98' and a Direction of N67°10'47"E, 48.98' to a point; thence S87°58'54"E, 49.66' to a point; thence S87°58'17"E, 130.39' to a point; thence S09°31'44"E, 28.27' to a point; thence a curve to the Left having a Radius of 20.00', a Length of 30.32' and a Direction of S52°57'16"E, 27.50' to a point; thence a curve to the Right having a Radius of 1,005.00', a Length of 79.07' and a Direction of N85°52'26"E, 79.05' to a point; thence N88°07'40"E, 207.65' to a point; thence a curve to the Left having a Radius of 880.00', a Length of 299.33' and a Direction of N78°22'59"E, 297.89' to a point; thence S87°54'41"E, 25.01' to a point; thence N66°41'16"E, 199.17' to a point; thence S24°31'49"E, 95.91' to a point; thence S65°28'11"W, 172.84' to a point; thence a curve to the Right having a Radius of 990.00', a Length of 391.50' and a Direction of S76°47'55"W, 388.96' to a point; thence S88°15'11"W, 158.83' to a point; thence S82°47'37"W, 110.66' to a point; thence a curve to the Left having a Radius of 20.00', a Length of 32.23' and a Direction of S36°37'57"W, 28.85' to a point; thence S09°31'44"E, 31.05' to a point; thence a curve to the Left having a Radius of 475.00', a Length of 114.32' and a Direction of S16°25'26"E, 114.05' to a point; thence S14°55'06"E, 28.54' to a point; thence a curve to the Left having a Radius of 480.01', a Length of 143.51' and a Direction of S35°15'20"E, 142.97' to a point; thence S43°49'14"E, 349.36' to a point; thence a curve to the Right having a Radius of 715.00', a Length of 674.37' and a Direction of S16°48'02"E, 649.65' to a point; thence S87°28'46"E, 195.69' to a point; thence S87°28'09"E, 1,310.85' to a point; thence S87°31'29"E, 16.61' to a point; thence S24°36'54"W, 730.39' to a point; thence a curve to the Right having a Radius of 1097.98', a Length of 143.09' and a Direction of S49°31'31"E, 142.99' to a point; thence S45°47'31"E, 153.36' to a point; thence a curve to the Right having a Radius of 880.00', a Length of 231.46' and a Direction of S53°15'39"E, 230.79' to a point; thence S45°47'31"W, 376.61' to a point; thence S35°44'56"W, 30.33' to a point; thence S35°44'56"W, 30.33' to a point; thence N45°47'31"W, 385.60' to a point; thence a curve to the Left having a Radius of 820.00', a Length of 90.03' and a Direction of N48°52'15"E, 89.98' to a point; thence S66°31'41"W, 375.96' to a point; thence N81°31'47"W, 861.72 to a point; thence N81°28'50"W, 149.98' to a point; thence N81°33'25"W, 56.41' to a point; thence N81°44'30"W, 219.28' to a point; thence S19°51'42"W, 340.91' to a point; thence N70°08'18"W, 585.61 to a point; thence S03°40'12"W, 844.63' to a point; thence S03°03'45"W, 587.47' to a point; thence S89°39'02"E, 205.00' to a point; thence N00°17'07"E, 209.76' to a point; thence S89°42'53"E, 210.00' to a point; thence S00°17'07"W, 210.00' to a point; thence S85°26'31"E, 434.14' to a point; thence S56°32'07"W, 821.71' to a point; thence S02°53'36"W, 73.32' to a point; thence N77°53'40"W, 922.38' to a point;

said Iron Pipe being the Point of Beginning.
Said Annexation contains 4,415,090 square feet / 101.356 acres, more or less.

| Easement Line Table | | |
|---|---|---|
| Line # | Direction | Length |
| E90 | S05°16'12"W | 110.52 |
| E91 | S65°28'11"W | 57.62 |
| E92 | N05°16'12"E | 111.92 |
| E93 | N66°41'16"E | 56.94 |
| E95 | S01°32'39"W | 36.51 |
| E96 | S66°43'25"W | 562.77 |
| E97 | N87°54'57"W | 683.87 |
| E98 | N87°58'54"W | 110.69 |
| E99 | N01°20'12"E | 50.18 |
| E100 | S87°54'41"E | 759.44 |
| E101 | N66°41'16"E | 529.20 |
| E102 | S88°26'17"E | 65.92 |
| E103 | S81°44'30"E | 54.38 |
| E104 | N05°16'12"E | 1024.00 |
| E105 | S87°27'56"E | 50.06 |
| E106 | S05°16'12"W | 1029.00 |
| E107 | N81°44'30"W | 50.07 |
| E108 | N45°47'31"W | 767.73 |
| E109 | N85°20'31"W | 494.97 |
| E110 | N04°39'29"E | 60.00 |
| E111 | S85°20'31"E | 494.97 |
| E112 | S45°47'31"E | 758.81 |
| E114 | N04°45'16"E | 317.54 |
| E115 | N19°40'04"E | 280.91 |
| E116 | S00°17'07"W | 150.66 |
| E117 | S19°40'04"W | 132.24 |
| E118 | S04°45'16"W | 271.62 |
| E119 | S56°32'07"W | 63.64 |
| E120 | N56°32'07"E | 159.14 |

| Curve Table | | | | | | |
|---|---|---|---|---|---|---|
| Curve # | Radius | Length | Delta | Direction | Chord | Tangent |
| C1 | 540.00 | 280.51 | 029°45'47" | N34°33'25"E | 277.37 | 143.50 |
| C2 | 25.00 | 38.27 | 087°42'27" | N05°35'05"E | 34.64 | 24.02 |
| C3 | 25.00 | 38.27 | 087°42'27" | S86°42'27"E | 34.64 | 24.02 |
| C4 | 655.00 | 288.86 | 025°16'04" | N36°48'17"E | 286.52 | 146.82 |
| C5 | 8.00 | 13.10 | 093°48'15" | N22°43'53"W | 11.68 | 8.55 |
| C6 | 8.00 | 12.85 | 092°03'02" | N64°20'28"E | 11.51 | 8.29 |
| C7 | 655.00 | 710.34 | 062°08'11" | N12°45'08"W | 676.04 | 394.63 |
| C8 | 540.00 | 161.66 | 017°09'08" | N35°14'40"W | 161.05 | 81.44 |
| C9 | 545.00 | 131.00 | 013°46'17" | N16°24'52"W | 130.68 | 65.81 |
| C10 | 20.00 | 32.64 | 093°31'06" | N56°17'17"W | 29.14 | 21.27 |
| C11 | 35.00 | 57.08 | 093°26'04" | N63°44'30"W | 50.96 | 37.16 |
| C12 | 899.85 | 59.13 | 003°45'54" | S67°39'31"W | 59.12 | 29.58 |
| C13 | 1000.00 | 48.98 | 002°48'24" | N67°10'47"E | 48.98 | 24.50 |
| C14 | 20.00 | 30.32 | 086°51'05" | S52°57'16"E | 27.50 | 18.93 |
| C15 | 1005.00 | 79.07 | 004°30'28" | N85°52'26"E | 79.05 | 39.56 |
| C16 | 880.00 | 299.33 | 019°29'22" | N78°22'59"E | 297.89 | 151.13 |
| C17 | 990.00 | 391.50 | 022°39'29" | S76°47'55"W | 388.96 | 198.34 |
| C18 | 20.00 | 32.23 | 092°19'21" | S36°37'57"W | 28.85 | 20.83 |
| C19 | 475.00 | 114.32 | 013°47'24" | S16°25'26"E | 114.05 | 57.44 |
| C20 | 480.01 | 143.51 | 017°07'47" | S35°15'20"E | 142.97 | 72.29 |
| C21 | 715.00 | 674.37 | 054°02'25" | S16°48'02"E | 649.65 | 364.63 |
| C28 | 1097.98 | 143.09 | 007°28'00" | S49°31'31"E | 142.99 | 71.65 |
| C29 | 880.00 | 231.46 | 015°04'12" | S53°15'39"E | 230.79 | 116.40 |
| C30 | 820.00 | 90.03 | 006°17'26" | N48°52'15"W | 89.98 | 45.06 |

| Easement Curve Table | | | | | | |
|---|---|---|---|---|---|---|
| Curve # | Radius | Length | Delta | Direction | Chord | Tangent |
| EC23 | 1070.35 | 411.40 | 022°01'20" | N56°49'40"W | 408.87 | 208.27 |
| EC24 | 1065.04 | 325.80 | 017°31'38" | N76°36'09"W | 324.53 | 164.18 |
| EC25 | 1127.96 | 344.10 | 017°28'44" | S76°36'09"E | 342.77 | 173.40 |
| EC26 | 1127.99 | 434.53 | 022°04'18" | S56°49'40"E | 431.85 | 219.99 |

| Line Table | | |
|---|---|---|
| Line # | Direction | Length |
| L1 | N02°44'07"E | 994.82 |
| L2 | N86°50'22"W | 258.73 |
| L3 | N39°30'30"E | 26.26 |
| L4 | N23°42'22"W | 35.95 |
| L5 | N13°54'09"E | 79.15 |
| L6 | N17°33'13"W | 18.56 |
| L7 | N67°29'17"E | 37.85 |
| L8 | N02°16'21"W | 22.18 |
| L9 | N70°27'02"W | 29.99 |
| L10 | N44°05'42"W | 39.31 |
| L11 | N13°50'46"E | 28.19 |
| L12 | N66°20'10"E | 26.21 |
| L13 | N16°14'26"E | 42.75 |
| L14 | N42°08'44"E | 49.37 |
| L15 | N12°33'20"W | 47.21 |
| L16 | S89°48'05"W | 27.39 |
| L17 | N47°19'12"W | 39.00 |
| L18 | N17°31'45"E | 67.92 |
| L19 | S52°16'45"E | 28.62 |
| L20 | N53°21'20"E | 14.91 |
| L21 | N12°12'41"E | 91.90 |
| L22 | N02°59'42"W | 51.52 |
| L23 | N59°30'21"W | 62.80 |
| L24 | S39°54'45"W | 52.49 |
| L25 | S81°30'52"W | 18.15 |
| L26 | N37°30'45"W | 51.54 |
| L27 | N14°00'20"W | 81.92 |
| L28 | N41°47'32"E | 23.66 |
| L29 | N31°38'22"W | 1.96 |
| L30 | N09°34'30"W | 39.41 |
| L31 | N04°27'00"E | 78.83 |
| L32 | S86°25'14"E | 33.05 |
| L33 | N79°11'30"E | 445.19 |
| L34 | N48°13'38"E | 50.09 |
| L35 | N22°54'33"E | 74.47 |
| L36 | S87°24'13"E | 584.86 |
| L37 | N19°40'32"E | 59.76 |
| L38 | N49°26'19"E | 244.69 |
| L39 | N49°26'19"E | 50.04 |
| L40 | N49°26'19"E | 55.76 |
| L41 | N69°38'01"W | 18.54 |
| L42 | N24°32'45"E | 50.21 |
| L43 | S69°38'01"E | 15.90 |
| L44 | N43°49'14"W | 349.36 |

| Line Table | | |
|---|---|---|
| Line # | Direction | Length |
| L45 | N33°53'34"W | 32.27 |
| L46 | N09°31'44"W | 39.04 |
| L47 | N17°01'28"W | 70.37 |
| L48 | N24°13'25"W | 100.00 |
| L49 | S87°58'54"E | 49.66 |
| L50 | S87°58'17"E | 130.39 |
| L51 | S09°31'44"E | 28.27 |
| L52 | N88°07'40"E | 207.65 |
| L53 | S87°54'41"E | 25.01 |
| L54 | N66°41'16"E | 199.17 |
| L55 | S24°31'49"E | 95.91 |
| L56 | S65°28'11"W | 172.84 |
| L57 | S88°15'11"W | 158.83 |
| L58 | S82°47'37"W | 110.66 |
| L59 | S09°31'44"E | 31.05 |
| L60 | S14°55'06"E | 28.54 |
| L61 | S43°49'14"E | 349.36 |
| L62 | S87°28'46"E | 195.69 |
| L63 | S87°28'09"E | 1310.85 |
| L64 | S87°31'29"E | 16.61 |
| L65 | S24°36'54"W | 730.39 |
| L66 | S45°47'31"E | 153.36 |
| L67 | S45°47'31"E | 376.61 |
| L68 | S35°44'56"W | 30.33 |
| L69 | S35°44'56"W | 30.33 |
| L70 | N45°47'31"W | 385.60 |
| L71 | S66°31'41"W | 375.96 |
| L72 | N81°31'47"W | 861.72 |
| L73 | N81°28'50"W | 149.98 |
| L74 | N81°33'25"W | 56.41 |
| L75 | N81°44'30"W | 219.28 |
| L76 | S19°51'42"W | 340.91 |
| L77 | N70°08'18"W | 585.61 |
| L78 | S03°40'12"W | 844.63 |
| L79 | S03°03'45"W | 587.47 |
| L80 | S89°39'02"E | 205.00 |
| L81 | N00°17'07"E | 209.76 |
| L82 | S89°42'53"E | 210.00 |
| L83 | S00°17'07"W | 210.00 |
| L84 | S85°26'31"E | 434.14 |
| L85 | S56°32'07"W | 821.71 |
| L86 | S02°53'36"W | 73.32 |
| L87 | N77°53'40"W | 922.38 |

NORTH CAROLINA PROFESSIONAL L-4412 SURVEYOR SEAL 1/25/2020

WAKE COUNTY, NC 91
TAMMY L. BRUNNER
REGISTER OF DEEDS
PRESENTED & RECORDED ON
01/15/2021 13:09:03
BOOK:BM2021 PAGE:00134

UNLESS THIS MAP IS SIGNED AND SEALED BY THE SURVEYOR IN CHARGE, THIS MAP IS CONSIDERED PRELIMINARY AND NOT TO BE USED FOR RECORDING, CONVEYANCE OR SALES

Bateman Civil Survey Company
Engineers ● Surveyors ● Planners
2524 Reliance Ave., Apex, NC 27539
Phone: 919.577.1080 Fax: 919.577.1081
NCBELS FIRM No. C-2378

OWNER
MFW INVESTMENTS LLC
114 BIRKLANDS DRIVE
CARY, NORTH CAROLINA, 27518

ANNEXATION MAP
FOR THE TOWN OF APEX
APEX, NC, WAKE COUNTY, WHITE OAK TOWNSHIP
REID# 0099938, 0463860, 0034313, 0012276, 0434123, 0449641, 0457588, 0040550, 0203126, 0033171, 0033292, 0089614 & 0203135

Designed By: N/A
Drawn By: JCH
Checked By: JWB
Scale:
Date: 03/24/2020
Project # 180585

SHEET 7 OF 7

# Wake County Real Estate Data
## Account Summary

Real Estate ID **0463860** PIN # **0751216689**

Location Address
**0 E WILLIAMS ST**

Property Description
**TWN OF APEX / NEW PUBLIC RDWY ESMNT**

| Property Owner | Owner's Mailing Address | Property Location Address |
|---|---|---|
| **MFW INVESTMENTS LLC**<br>(Use the Deeds link to view any additional owners) | **114 BIRKLANDS DR**<br>**CARY NC 27518-8203** | **0 E WILLIAMS ST**<br>**APEX NC 27539-** |

| **Administrative Data** | | **Transfer Information** | | **Assessed Value** | |
|---|---|---|---|---|---|
| Old Map # | **696--** | | | | |
| Map/Scale | **0751 03** | Deed Date | **10/30/2018** | Land Value Assessed | **$25,704** |
| VCS | **20AP901** | Book & Page | **17279 1698** | Bldg. Value Assessed | |
| City | | Revenue Stamps | **47.00** | | |
| Fire District | **23** | Pkg Sale Date | | | |
| Township | **WHITE OAK** | Pkg Sale Price | | Tax Relief | |
| Land Class | **VACANT** | Land Sale Date | **10/30/2018** | | |
| ETJ | **AP** | Land Sale Price | **$23,500** | Land Use Value | |
| Spec Dist(s) | | | | Use Value Deferment | |
| Zoning | **RA** | **Improvement Summary** | | Historic Deferment | |
| History ID 1 | | | | Total Deferred Value | |
| History ID 2 | | Total Units | **0** | | |
| Acreage | **.51** | Recycle Units | **0** | | |
| Permit Date | | Apt/SC Sqft | | Use/Hist/Tax Relief | |
| Permit # | | Heated Area | | Assessed | |
| | | | | Total Value Assessed* | **$25,704** |

*Wake County assessed building and land values reflect the market value as of January 1, 2020, which is the date of the last county-wide revaluation. Any inflation, deflation or other economic changes occurring after this date does not affect the assessed value of the property and cannot be lawfully considered when reviewing the value for adjustment.

The January 1, 2020 values will remain in effect until the next county-wide revaluation. Until that time, any real estate accounts created or new construction built is assessed according to the 2020 Schedule of Values.

**For questions regarding the information displayed on this site, please contact the Department of Tax Administration at Taxhelp@wakegov.com or call 919-856-5400.**

# Wake County Real Estate Data
## Account Summary

Real Estate ID **0099938** PIN # **0751323228**

Location Address
**5125 JESSIE DR**

Property Description
**RCMB PROP TRINITY APEX NORTH 100 LLC BM2016-01902**

| Property Owner | Owner's Mailing Address | Property Location Address |
|---|---|---|
| **TRINITY APEX NORTH 100 LLC**<br>(Use the Deeds link to view any additional owners) | **106 ISLAND VIEW DR**<br>**BEAUFORT NC 28516-9108** | **5125 JESSIE DR**<br>**APEX NC 27539-6281** |

| **Administrative Data** | | **Transfer Information** | | **Assessed Value** | |
|---|---|---|---|---|---|
| Old Map # | **673-00000-0039** | | | | |
| Map/Scale | **0751 03** | Deed Date | **4/20/2012** | Land Value Assessed | **$1,272,552** |
| VCS | **SWAP001** | Book & Page | **14735 0685** | Bldg. Value Assessed | |
| City | | Revenue Stamps | **2160.00** | | |
| Fire District | **23** | Pkg Sale Date | **1/1/1977** | | |
| Township | **WHITE OAK** | Pkg Sale Price | **$26,500** | Tax Relief | |
| Land Class | **VACANT** | Land Sale Date | **4/20/2012** | | |
| ETJ | **AP** | Land Sale Price | **$216,000** | Land Use Value | |
| Spec Dist(s) | | | | Use Value Deferment | |
| Zoning | **LI** | **Improvement Summary** | | Historic Deferment | |
| History ID 1 | | | | Total Deferred Value | |
| History ID 2 | | Total Units | **0** | | |
| Acreage | **27.40** | Recycle Units | **0** | | |
| Permit Date | | Apt/SC Sqft | | Use/Hist/Tax Relief | |
| Permit # | | Heated Area | | Assessed | |
| | | | | Total Value Assessed* | **$1,272,552** |

*Wake County assessed building and land values reflect the market value as of January 1, 2020, which is the date of the last county-wide revaluation. Any inflation, deflation or other economic changes occurring after this date does not affect the assessed value of the property and cannot be lawfully considered when reviewing the value for adjustment.

The January 1, 2020 values will remain in effect until the next county-wide revaluation. Until that time, any real estate accounts created or new construction built is assessed according to the 2020 Schedule of Values.

**For questions regarding the information displayed on this site, please contact the Department of Tax Administration at Taxhelp@wakegov.com or call 919-856-5400.**

# Wake County Real Estate Data
## Account Summary

Real Estate ID **0034313** PIN # **0751319308**

Location Address
**5101 JESSIE DR**

Property Description
**LOGR PT 1 RCMB TRINITY APEX NORTH 100 LLC BM2016-01902**



| Property Owner | Owner's Mailing Address | Property Location Address |
|---|---|---|
| **MFW INVESTMENTS, LLC**<br>(Use the Deeds link to view any additional owners) | **114 BIRKLANDS DR**<br>**CARY NC 27518-8203** | **5101 JESSIE DR**<br>**APEX NC 27539-6281** |

| **Administrative Data** | | **Transfer Information** | | **Assessed Value** | |
|---|---|---|---|---|---|
| Old Map # | **673--** | | | | |
| Map/Scale | **0751 03** | Deed Date | **12/15/2016** | Land Value Assessed | **$1,088,248** |
| VCS | **20AP901** | Book & Page | **16638 1192** | Bldg. Value Assessed | |
| City | | Revenue Stamps | **3880.00** | | |
| Fire District | **23** | Pkg Sale Date | | | |
| Township | **WHITE OAK** | Pkg Sale Price | | Tax Relief | |
| Land Class | **VACANT** | Land Sale Date | **12/15/2016** | | |
| ETJ | **AP** | Land Sale Price | **$1,062,300** | Land Use Value | |
| Spec Dist(s) | | | | Use Value Deferment | |
| Zoning | **PUD-CZ** | **Improvement Summary** | | Historic Deferment | |
| History ID 1 | | | | Total Deferred Value | |
| History ID 2 | | Total Units | **0** | | |
| Acreage | **22.67** | Recycle Units | **0** | | |
| Permit Date | | Apt/SC Sqft | | Use/Hist/Tax Relief | |
| Permit # | | Heated Area | | Assessed | |
| | | | | Total Value Assessed* | **$1,088,248** |

*Wake County assessed building and land values reflect the market value as of January 1, 2020, which is the date of the last county-wide revaluation. Any inflation, deflation or other economic changes occurring after this date does not affect the assessed value of the property and cannot be lawfully considered when reviewing the value for adjustment.

The January 1, 2020 values will remain in effect until the next county-wide revaluation. Until that time, any real estate accounts created or new construction built is assessed according to the 2020 Schedule of Values.

**For questions regarding the information displayed on this site, please contact the Department of Tax Administration at Taxhelp@wakegov.com or call 919-856-5400.**

WAKE COUNTY, NC
CHARLES P. GILLIAM
REGISTER OF DEEDS
PRESENTED & RECORDED ON
06-04-2019 AT 15:35:34
STATE OF NC REAL ESTATE
EXCISE TAX: $3,000.00
BOOK: 017463 PAGE: 02103 - 02105

# NORTH CAROLINA GENERAL WARRANTY DEED

Excise Tax: $3,000.00

Tax Parcel No. Out of 00099938

E-Filing Certificate **Submitted electronically by Barringer Sasser, LLP in compliance with North Carolina statutes governing recordable documents and the terms of the submitter agreement with the Wake County Register of Deeds.**

**Mail/Box to: Barringer Sasser, LLP, PO Box 5566, Cary, NC 27512**

This instrument was prepared by: Barringer Sasser, LLP, PO Box 5566, Cary, NC 27512

Brief description for the Index: 23.275 acres, BM 2016, Pg. 1902, WCR.

THIS DEED made this 3rd day of June, 2019, by and between

| GRANTOR | GRANTEE |
|---|---|
| **MFW Investments, LLC,**<br>**a No. Carolina limited liability company** | **Horton Park MF LLC,**<br>**a No. Carolina limited liability company** |
| 114 Birklands Drive<br>Raleigh, North Carolina 27607 | c/o 3605 Glenwood Avenue, Suite 55<br>Raleigh, North Carolina 27612 |

The designation Grantor and Grantee as used herein shall include said parties, their heirs, successors, and assigns, and shall include singular, plural, masculine, feminine or neuter as required by context.

WITNESSETH, that the Grantor, for a valuable consideration paid by the Grantee, the receipt of which is hereby acknowledged, has and by these presents does grant, bargain, sell and convey unto the Grantee in fee simple, all of its right, title and interest in that certain lot or parcel of land (the "Subject Property") situated in Wake County, North Carolina and more particularly described as follows:

**Being all of that certain tract or parcel of land called "NEW AREA – 23.275 +/- acres, as shown on that plat entitled "Recombination Survey Property of Trinity Apex North 100, LLC", prepared by Riley Surveying, P.A., and recorded in Book of Maps 2016, Page 1902, Wake County Registry.**

The Subject Property hereinabove described was acquired by Grantor by instrument recorded in Book 16638, Page 1192, Wake County Registry.

No portion of the property herein conveyed includes the primary residence of Grantor.

TO HAVE AND TO HOLD the aforesaid lot or parcel of land and all privileges and appurtenances thereto belonging to the Grantee in fee simple.

And the Grantor hereby covenants with the Grantee, that Grantor is seized of the premises in fee simple, has the right to convey the same in fee simple, that title is marketable and free and clear of all encumbrances, and that Grantor will warrant and defend the title against the lawful claims of all persons whomsoever, other than the following exceptions:

1. The lien of ad valorem property taxes for the year 2019 and thereafter; and,
2. All covenants, conditions, easements, and/or rights of way of record.

IN WITNESS WHEREOF, the Grantor has duly executed the foregoing as of the day and year first above written.

**MFW Investments, LLC, a North Carolina limited liability company**

**By:** _____ **(SEAL)**
**Michael F. Whitehead, Duly Authorized Member/Manager**

**State of North Carolina - County of Wake**

I, Casey E Wentz, the undersigned Notary Public of Wake County, North Carolina, certify that **Michael F. Whitehead**, known to me or proved on the basis of satisfactory evidence to be the person described, personally appeared before me this day and acknowledged the due and voluntary execution of the foregoing instrument for and on behalf of the said limited liability company and in the indicated capacity.

Witness my hand and Notarial stamp or seal this 3rd day of June, 2019.

Casey E. Wentz
Casey E. Wentz Notary Public
Notary's Printed or Typed Name

NOTARY SEAL

CASEY E. WENTZ
Notary Public
Wake County, N.C.
My Commission Expires: June 16, 2020

My Commission Expires: June 16, 2020

# EXHIBIT A

**Being all of that certain tract or parcel of land called "NEW AREA – 23.275 +/- acres, as shown on that plat entitled "Recombination Survey Property of Trinity Apex North 100, LLC", prepared by Riley Surveying, P.A., and recorded in Book of Maps 2016, Page 1902, Wake County Registry.**

RESOLUTION SETTING DATE OF PUBLIC HEARING
ON THE QUESTION OF ANNEXATION PURSUANT TO G.S.§ 160A-31 AS AMENDED

Annexation Petition #709
MFW Investments, LLC, Trinity Apex North 100, LLC, and Horton Park MF, LLC

WHEREAS, a petition requesting annexation of the area described herein has been received; and

WHEREAS, the Town Council of Apex, North Carolina has by Resolution directed the Town Clerk to investigate the sufficiency thereof; and

WHEREAS, Certification by the Town Clerk as to the sufficiency of said petition has been made;

NOW, THEREFORE, BE IT RESOLVED by the Town Council of the Town of Apex, North Carolina that:

Section 1. A public hearing on the question of annexation of the area described herein will be held at the Apex Town Hall at 6 o'clock p.m. on the 13th day of April 2021.

Section 2. The area proposed for annexation is described as attached.

Section 3. Notice of said public hearing shall be published on the Town of Apex Website, www.apexnc.org, Public Notice, at least ten (10) days prior to the date of said public hearing.

This the 23rd day of March 2021.

_____
Jacques K. Gilbert, Mayor

ATTEST:

_____
Donna B. Hosch, MMC, NCCMC, Town Clerk

# PETITION FOR VOLUNTARY ANNEXATION

This document is a public record under the North Carolina Public Records Act and may be published on the Town's website or disclosed to third parties.

Application #: 709 Submittal Date: 3/5/2021

Fee Paid $ 200 Check # 1394

## TO THE TOWN COUNCIL APEX, NORTH CAROLINA

1. We, the undersigned owners of real property, respectfully request that the area described in Part 4 below be annexed to the Town of Apex, Wake County, North Carolina.
2. The area to be annexed is ■ contiguous, ☐ non-contiguous (satellite) to the Town of Apex, North Carolina and the boundaries are as contained in the metes and bounds description attached hereto.
3. If contiguous, this annexation will include all intervening rights-of-way for streets, railroads, and other areas as stated in G.S. 160A-31(f), unless otherwise stated in the annexation amendment.

## OWNER INFORMATION

| | |
|---|---|
| MFW Investments LLC<br>Owner Name (Please Print) | PIN 0751-21-6689 (portion)<br>Property PIN or Deed Book & Page # |
| (919) 801-3905<br>Phone | mwhitehead@macgregordev.com<br>E-mail Address |
| Owner Name (Please Print) | Property PIN or Deed Book & Page # |
| Phone | E-mail Address |
| Owner Name (Please Print) | Property PIN or Deed Book & Page # |
| Phone | E-mail Address |

## SURVEYOR INFORMATION

Surveyor: Bateman Civil Survey Company

Phone: (919) 577-1080 Fax: (919) 577-1081

E-mail Address: heath@batemancivilsurvey.com

## ANNEXATION SUMMARY CHART

**Property Information**

| | |
|---|---|
| Total Acreage to be annexed: | 0.51 acres |
| Population of acreage to be annexed: | 0 |
| Existing # of housing units: | 0 |
| Proposed # of housing units: | 0 |
| Zoning District*: | RA |

**Reason(s) for annexation (select all that apply)**

| | |
|---|---|
| Need water service due to well failure | ☐ |
| Need sewer service due to septic system failure | ☐ |
| Water service (new construction) | ☐ |
| Sewer service (new construction) | ☐ |
| Receive Town Services | ☑ |

*If the property to be annexed is not within the Town of Apex's Extraterritorial Jurisdiction, the applicant must also submit a rezoning application with the petition for voluntary annexation to establish an Apex zoning designation. Please contact the Planning Department for questions.

## PETITION FOR VOLUNTARY ANNEXATION

Application #: 709 Submittal Date: 3/5/2021

### COMPLETE IF IN A LIMITED LIABILITY COMPANY

In witness whereof, MFW Investments, LLC a limited liability company, caused this instrument to be executed in its name by a member/manager pursuant to authority duly given, this the 17th day of February, 2021.

Name of Limited Liability Company MFW Investments, LLC

By: _____
Signature of Member/Manager

STATE OF NORTH CAROLINA
COUNTY OF WAKE

Sworn and subscribed before me, Rhonda Muhaluk, a Notary Public for the above State and County, this the 17th day of, February, 2021.

Rhonda Muhaluk
Notary Public

SEAL

RHONDA MUHALUK
Notary Public
Carteret Co., North Carolina
My Commission Expires Aug. 19, 2024

My Commission Expires: Aug. 19, 2024

### COMPLETE IF IN A PARTNERSHIP

In witness whereof, _____, a partnership, caused this instrument to be executed in its name by a member/manager pursuant to authority duly given, this the _____ day of _____, 20_____.

Name of Partnership _____

By: _____
Signature of General Partner

STATE OF NORTH CAROLINA
COUNTY OF WAKE

Sworn and subscribed before me, _____, a Notary Public for the above State and County, this the _____day of _____, 20____.

_____
Notary Public

SEAL

My Commission Expires: _____

# PETITION FOR VOLUNTARY ANNEXATION

This document is a public record under the North Carolina Public Records Act and may be published on the Town's website or disclosed to third parties.

Application #: 709 Submittal Date: 3/5/2021

Fee Paid $ Check #

## TO THE TOWN COUNCIL APEX, NORTH CAROLINA

1. We, the undersigned owners of real property, respectfully request that the area described in Part 4 below be annexed to the Town of Apex, Wake County, North Carolina.
2. The area to be annexed is ■ contiguous, ☐ non-contiguous (satellite) to the Town of Apex, North Carolina and the boundaries are as contained in the metes and bounds description attached hereto.
3. If contiguous, this annexation will include all intervening rights-of-way for streets, railroads, and other areas as stated in G.S. 160A-31(f), unless otherwise stated in the annexation amendment.

## OWNER INFORMATION

| | |
|---|---|
| Trinity Apex North 100, LLC<br>Owner Name (Please Print) | PIN 0751-32-3228 (portion)<br>Property PIN or Deed Book & Page # |
| 919-356-7272<br>Phone | CHETMANN@GMAIL.COM<br>E-mail Address |
| CHET MANN<br>Owner Name (Please Print) | 0751323228<br>Property PIN or Deed Book & Page # |
| 919-777-0114<br>Phone | E-mail Address |
| Owner Name (Please Print) | Property PIN or Deed Book & Page # |
| Phone | E-mail Address |

## SURVEYOR INFORMATION

Surveyor: Bateman Civil Survey Company

Phone: (919) 577-1080 Fax: (919) 577-1081

E-mail Address: heath@batemancivilsurvey.com

## ANNEXATION SUMMARY CHART

| Property Information | | Reason(s) for annexation (select all that apply) | |
|---|---|---|---|
| Total Acreage to be annexed: | 0.332 acres | Need water service due to well failure | ☐ |
| Population of acreage to be annexed: | 0 | Need sewer service due to septic system failure | ☐ |
| Existing # of housing units: | 0 | Water service (new construction) | ☐ |
| Proposed # of housing units: | 0 | Sewer service (new construction) | ☐ |
| Zoning District*: | LI-CZ | Receive Town Services | ☑ |

*If the property to be annexed is not within the Town of Apex's Extraterritorial Jurisdiction, the applicant must also submit a rezoning application with the petition for voluntary annexation to establish an Apex zoning designation. Please contact the Planning Department for questions.

## PETITION FOR VOLUNTARY ANNEXATION

Application #: 709 Submittal Date: 3/5/2021

### COMPLETE IF IN A LIMITED LIABILITY COMPANY

In witness whereof, Trinity Apex North 100 LLC a limited liability company, caused this instrument to be executed in its name by a member/manager pursuant to authority duly given, this the 24 day of February, 2021.

Name of Limited Liability Company Trinity Apex North 100, LLC

By: _____
Signature of Member/Manager

STATE OF NORTH CAROLINA
COUNTY OF WAKE

Sworn and subscribed before me, Andrea T. Waters a Notary Public for the above State and County, this the 24 day of, February, 2021.

Andrea T. Waters
Notary Public

SEAL

ANDREA T. WATERS NOTARY PUBLIC WAKE COUNTY, NC

My Commission Expires: 1/22/2024

### COMPLETE IF IN A PARTNERSHIP

In witness whereof, _____, a partnership, caused this instrument to be executed in its name by a member/manager pursuant to authority duly given, this the _____ day of _____, 20_____.

Name of Partnership _____

By: _____
Signature of General Partner

STATE OF NORTH CAROLINA
COUNTY OF WAKE

Sworn and subscribed before me, _____, a Notary Public for the above State and County, this the _____day of _____, 20____.

_____
Notary Public

SEAL

My Commission Expires: _____

## PETITION FOR VOLUNTARY ANNEXATION

This document is a public record under the North Carolina Public Records Act and may be published on the Town's website or disclosed to third parties.

Application #: 709 Submittal Date: 3/5/2021

Fee Paid $ Check #

## TO THE TOWN COUNCIL APEX, NORTH CAROLINA

1. We, the undersigned owners of real property, respectfully request that the area described in Part 4 below be annexed to the Town of Apex, Wake County, North Carolina.
2. The area to be annexed is ■ contiguous, ☐ non-contiguous (satellite) to the Town of Apex, North Carolina and the boundaries are as contained in the metes and bounds description attached hereto.
3. If contiguous, this annexation will include all intervening rights-of-way for streets, railroads, and other areas as stated in G.S. 160A-31(f), unless otherwise stated in the annexation amendment.

## OWNER INFORMATION

| | |
|---|---|
| Horton Park MF LLC | PIN 0751-31-9308 (portion) |
| Owner Name (Please Print) | Property PIN or Deed Book & Page # |
| (919) 880-0832 | tdrake31@gmail.com |
| Phone | E-mail Address |
| | |
| Owner Name (Please Print) | Property PIN or Deed Book & Page # |
| Phone | E-mail Address |
| | |
| Owner Name (Please Print) | Property PIN or Deed Book & Page # |
| Phone | E-mail Address |

## SURVEYOR INFORMATION

Surveyor: Bateman Civil Survey Company

Phone: (919) 577-1080 Fax: (919) 577-1081

E-mail Address: heath@batemancivilsurvey.com

## ANNEXATION SUMMARY CHART

| Property Information | | Reason(s) for annexation (select all that apply) | |
|---|---|---|---|
| Total Acreage to be annexed: | 0.297 acres | Need water service due to well failure | ☐ |
| Population of acreage to be annexed: | 0 | Need sewer service due to septic system failure | ☐ |
| Existing # of housing units: | 0 | Water service (new construction) | ☐ |
| Proposed # of housing units: | 0 | Sewer service (new construction) | ☐ |
| Zoning District*: | PUD-CZ | Receive Town Services | ☑ |

*If the property to be annexed is not within the Town of Apex's Extraterritorial Jurisdiction, the applicant must also submit a rezoning application with the petition for voluntary annexation to establish an Apex zoning designation. Please contact the Planning Department for questions.

## PETITION FOR VOLUNTARY ANNEXATION

Application #: 709 Submittal Date: 3/5/2021

### COMPLETE IF IN A LIMITED LIABILITY COMPANY

In witness whereof, Horton Park MF LLC a limited liability company, caused this instrument to be executed in its name by a member/manager pursuant to authority duly given, this the 23 day of February, 2021.

Name of Limited Liability Company Horton Park MF LLC

By: Thomas W. Drake
Signature of Member/Manager

STATE OF NORTH CAROLINA
COUNTY OF WAKE

Sworn and subscribed before me, Emily E. Ballard, a Notary Public for the above State and County, this the 23 day of February, 2021.

SEAL

EMILY E BALLARD NOTARY PUBLIC WAKE COUNTY, NC My Commission Expires 07-29-23

Emily E Ballard
Notary Public

My Commission Expires: 7.29.23

### COMPLETE IF IN A PARTNERSHIP

In witness whereof, _____, a partnership, caused this instrument to be executed in its name by a member/manager pursuant to authority duly given, this the _____ day of _____, 20____.

Name of Partnership _____

By: _____
Signature of General Partner

STATE OF NORTH CAROLINA
COUNTY OF WAKE

Sworn and subscribed before me, _____, a Notary Public for the above State and County, this the _____day of _____, 20____.

_____
Notary Public

SEAL

My Commission Expires: _____

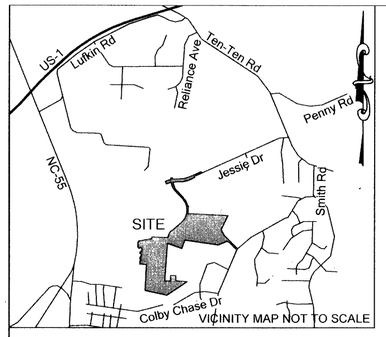


## *REFERENCES*

-Book Map 1942 Page 114
-Book Map 1987 Page 1199
-Book Map 1988 Page 754
-Book Map 2003 Page 1130
-Book Map 2006 Page 172
-Book Map 2015 Page 1973
-Book Map 2016 Page 1677
-Book Map 2016 Page 1902
-Book Map 2017 Page 1067
-Book Map 2017 Page 2004
-Book Map 2018 Page 1394
-Book Map 2018 Page 1751
-Deed Book 17511 Page 1752
-Deed Book 17511 Page 1755
-Deed Book 17473 Page 2443
-Deed Book 17279 Page 1698
-Deed Book 17211 Page 2706
-Deed Book 17139 Page 745
-Deed Book 16932 Page 295
-Deed Book 16638 Page 1192
-Deed Book 16215 Page 1702
-Deed Book 14735 Page 685
-Deed Book 4443 Page 94
-Deed Book 2353 Page 559

**Required Base Information:**

Project Information: MFW Investment LLC
0 E Williams Street, Apex, NC 27539 (Reid 0463860)
5220 Jessie Drive, Apex, NC 27539 (Reid 0012276)
5101 Jessie Drive, Apex, NC 27539 (Reid 0034313)
0 Dezola Street, Apex, NC 27539 (Reid 0203126)
8140 Smith Road, Apex, NC 27539 (Reid 0040550)
8306 Smith Road, Apex, NC 27539 (Reid 0033171)
0 Dezola Street, Apex, NC 27539 (Reid 0203135)
8252 Smith Road, Apex, NC 27539 (Reid 0089614)
Owner Information: MFW Investment LLC
Mike Whitehead
114 Birklands Drive, Cary, NC, 27518
mwhitehead@macgregordev.com
Project Information: Trinity Apex North 100 LLC
5125 Jessie Drive, Apex, NC 27539 (Reid 0099938)
Owner Information: Trinity Apex North 100 LLC
106 Island View Drive, Beaufort, NC, 28516
fill in the blank@whoknows.com
Project Information: Mary Elizabeth Horton
0 Dezola Street, Apex, NC 27539 (Reid 0434123)
Owner Information: Mary Elizabeth Horton
PO Box 306, Apex, NC, 27539
fill in the blank@whoknows.com
Project Information: MFWIRA LLC
0 Dezola Street, Apex, NC 27539 (Reid 0449641)
Owner Information: MFWIRA LLC
Mike Whitehead
114 Birklands Drive, Cary, NC, 27518
mwhitehead@macgregordev.com
Project Information: Kimberly A & Loomis Horton III
0 Dezola Street, Apex, NC 27539 (Reid 0457588)
Owner Information: Kimberly A & Loomis Horton III
4801 SW 202nd Avenue, Southwest Ranches, FL, 33332
mwhitehead@macgregordev.com
Project Information: Kimberly A & Loomis Horton III
8308 Smith Road, Apex, NC 27539 (Reid 0033292)
Owner Information: Kimberly A & Loomis Horton III
4801 SW 202nd Avenue, Southwest Ranches, FL, 33332
mwhitehead@macgregordev.com
Project Information: Dwight Marvin Wright
5010 Dezola Street, Apex, NC 27539 (Reid 0104750)
Owner Information: Dwight Marvin Wright
407 S Salem Street, Apex, NC, 27539
mwhitehead@macgregordev.com

Surveyor Information: Jeffrey W. Baker
North Carolina
L-4412
Date of Survey & Plat Preparation: 3/24/2020
Zoning District & Zoning Case #: PUD-CZ
Setbacks: PUD-CZ
Single Family: Front: 25'
Side: 6' minimum 16' total
Corner: 15'
Rear: 20'
Minimum Lot Width: 50'
Township, County, State: White Oak, Wake, North Carolina
Primary or Secondary Watershed: Secondary - Middle Creek Basin
FEMA designated floodplain: 'X' per F.I.R.M #3720075100J dated 05/02/2006

| Owner | PIN# | REID# | Deed Reference | Plat Reference | Use | Zoning |
|---|---|---|---|---|---|---|
| A) MFW Investments LLC - | 0750278925 | 0089614 | DB 17473, Pg 2443 | BM 1988, Pg 754, | Vacant | PUD-CZ |
| B) MFW Investments LLC - | 0750278677 | 0203135 | DB 17511, Pg 1752 | BM 1988, Pg 754, | Vacant | PUD-CZ |
| C) Timothy & Allison Felton - | 0750278301 | 0308838 | DB 17376, Pg 1337 | BM 2003, Pg 1130, | Single Family | RR |
| D) John J & Joyce T Falchi - | 0750279358 | 0308837 | DB 10836, Pg 2123 | BM 2003, Pg 1130, | Single Family | RR |
| E) Todd C & Gloria C Young - | 0750370454 | 0308836 | DB 11069, Pg 476 | BM 2003, Pg 1130, | Single Family | RR |
| F) Dennis & Roberta Dale - | 0750371540 | 0308835 | DB 11800, Pg 97 | BM 2003, Pg 1130, | Single Family | RR |
| G) Richard J & Mary A Stewart - | 0750372555 | 0308834 | DB 11012, Pg 2141 | BM 2003, Pg 1130, | Single Family | RR |
| H) Robert E & Krista B Cathey III - | 0750373664 | 0308833 | DB 11988, Pg 1801 | BM 2003, Pg 1130, | Single Family | RR |
| I) Amanda C & Steven A Rhodes - | 0750375700 | 0308832 | DB 12006, Pg 1186 | BM 2003, Pg 1130, | Single Family | RR |

"I, Jeffrey W. Baker, certify that this plat was drawn under my supervision from an actual survey made under my supervision (deed description recorded in Book 17511, page 1752, Book 17511, page 1755, Book 17473, page 2443, Book 17279, page 1698, Book 17211, page 2706, Book 17139, page 745, Book 16932, page 295, Book 16638, page 1192, Book 16215, page 1702, Book 14735, page 685, Book 4443, page 94, Book 2353, page 559); that the boundaries not surveyed are clearly indicated as drawn from information found in Book 1942, page 114, Book 1987, Page 1199, Book 1988, page 754, Book 2003, page 1130, Book 2006, page 172, Book 2015, page 1973, Book 2016, page 1677, Book 2016, page 1902, Book 2017, page 1067, Book 2017, page 2004, Book 2018, page 1394, Book 2018, page 1751; that the ratio of precision or positional accuracy as calculated is 1:10000+; that this plat was prepared in accordance with G.S. 47-30 as amended. witness my original signature, license number and seal this 25th day of June, A.D. 2020."

Professional Land Surveyor
License Number-4412

***I, Jeffrey W. Baker, Professional Land Surveyor No. L-4412 certify D. That the survey is of another category, such as the recombination of existing parcels, a court-ordered survey, or other exceptions to the definition of subdivision.***

*Jeffrey W. Baker, PLS L-4412* 6/25/2020 *date*

NORTH CAROLINA PROFESSIONAL SEAL L-4412 LAND SURVEYOR JEFFREY W. BAKER

WAKE COUNTY, NC 85
TAMMY L. BRUNNER
REGISTER OF DEEDS
PRESENTED & RECORDED ON
01/15/2021 13:09:03
BOOK:BM2021 PAGE:00128

GRAPHIC SCALE
400 200 0 400
( IN FEET )
1 inch = 400 ft.

Class of Survey: D
Positional Accuracy: 0.02'
Date of Survey: July, 2017
Datum/Epoch: NAD83/NSRS2011
Geoid Model: 12B
Combined Grid Factors: 0.99988461
Units: US Survey Feet

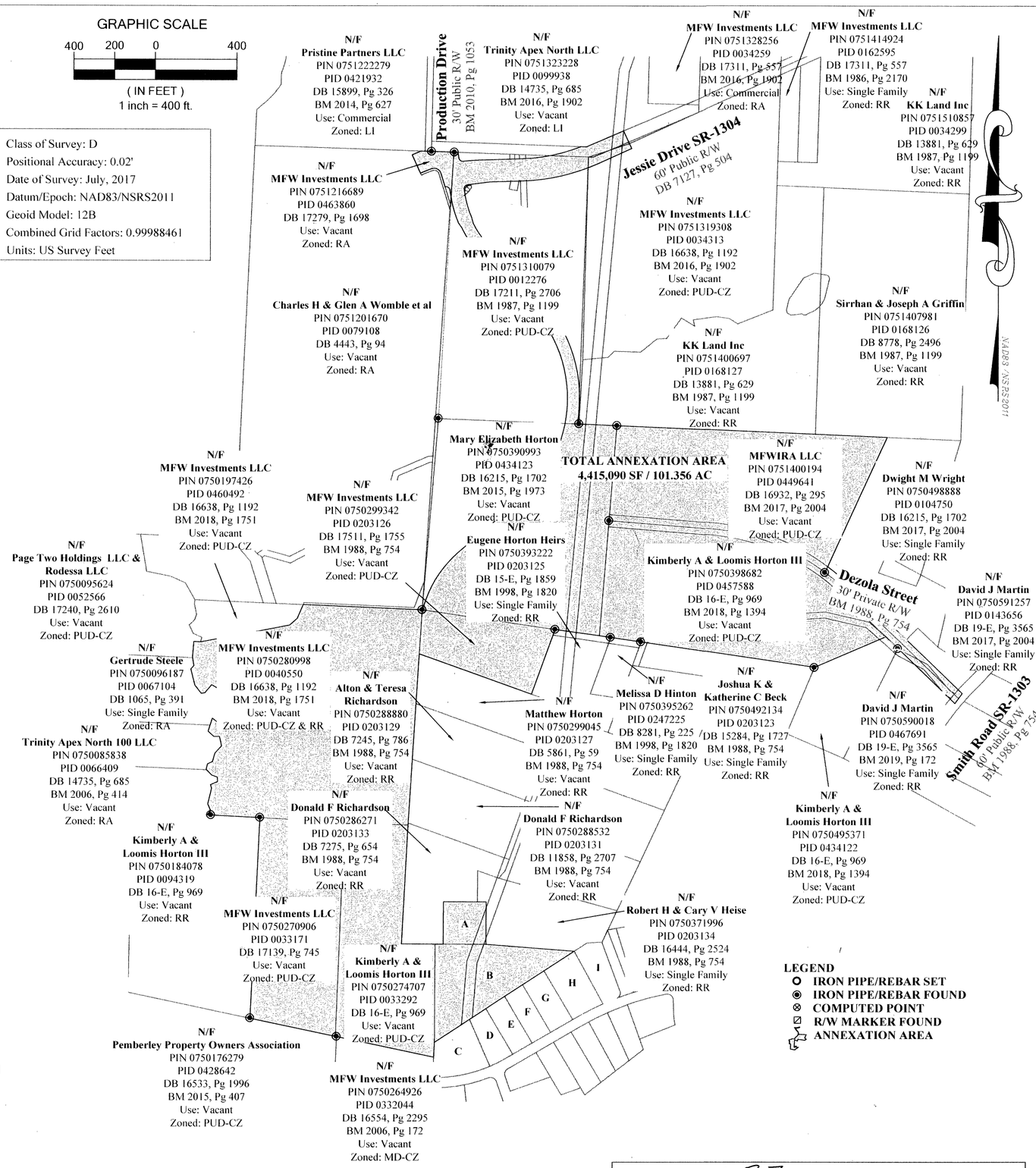


**LEGEND**
- IRON PIPE/REBAR SET
- IRON PIPE/REBAR FOUND
- COMPUTED POINT
- R/W MARKER FOUND
- ANNEXATION AREA

## NOTES:

1. This survey was prepared by Bateman Civil Survey Co., under the supervision of Jeffrey W. Baker, PLS.
2. This plan has been prepared for layout and permitting purposes only.
3. Property lines shown were taken from existing field evidence, existing deeds and/or plats of public record, and information supplied to the surveyor by the client
4. All distances are horizontal ground distances and all bearings are North Carolina State Plane Coordinate System unless otherwise shown.
5. No investigation into the existence of jurisdictional wetlands or riparian buffers performed by this firm.
6. Surveyor has made no investigation or independent search for easements of record, encumbrances, restrictive covenants, ownership title evidence or any other facts that an accurate and current title search may disclose.
7. No Grid Monuments found within 2000'.
8. Tied to the National CORS Network through NC VRS.

ANNEXATION # 687. I Donna B. Hosch, MMC, NCCMC, Town Clerk, Apex, North Carolina certify this is a true and exact map of annexation adopted the 15 day of DEC, 2020 by the Town Council. I set my hand and seal of the Town of Apex, 17 12 20 Day / Month / Year

Donna B. Hosch, MMC, NCCMC, Town Clerk

UNLESS THIS MAP IS SIGNED AND SEALED BY THE SURVEYOR IN CHARGE, THIS MAP IS CONSIDERED PRELIMINARY AND NOT TO BE USED FOR RECORDING, CONVEYANCE OR SALES

TOWN OF APEX NORTH CAROLINA 1873 NORTH CAROLINA

**Bateman Civil Survey Company**
Engineers ● Surveyors ● Planners
2524 Reliance Ave., Apex, NC 27539
Phone: 919.577.1080 Fax: 919.577.1081
NCBELS FIRM No. C-2378

OWNER
MFW INVESTMENTS LLC
114 BIRKLANDS DRIVE
CARY, NORTH CAROLINA, 27518

ANNEXATION MAP
FOR THE TOWN OF APEX
APEX, NC, WAKE COUNTY, WHITE OAK TOWNSHIP
REID# 0099938, 0463860, 0034313, 0012276, 0434123, 0449641, 0457588, 0040550, 0203126, 0033171, 0033292, 0089614 & 0203135

| | |
|---|---|
| Designed By: | N/A |
| Drawn By: | JCH |
| Checked By: | JWB |
| Scale: | 1"=400' |
| Date: | 03/24/2020 |
| Project #: | 180585 |

SHEET 1 OF 7

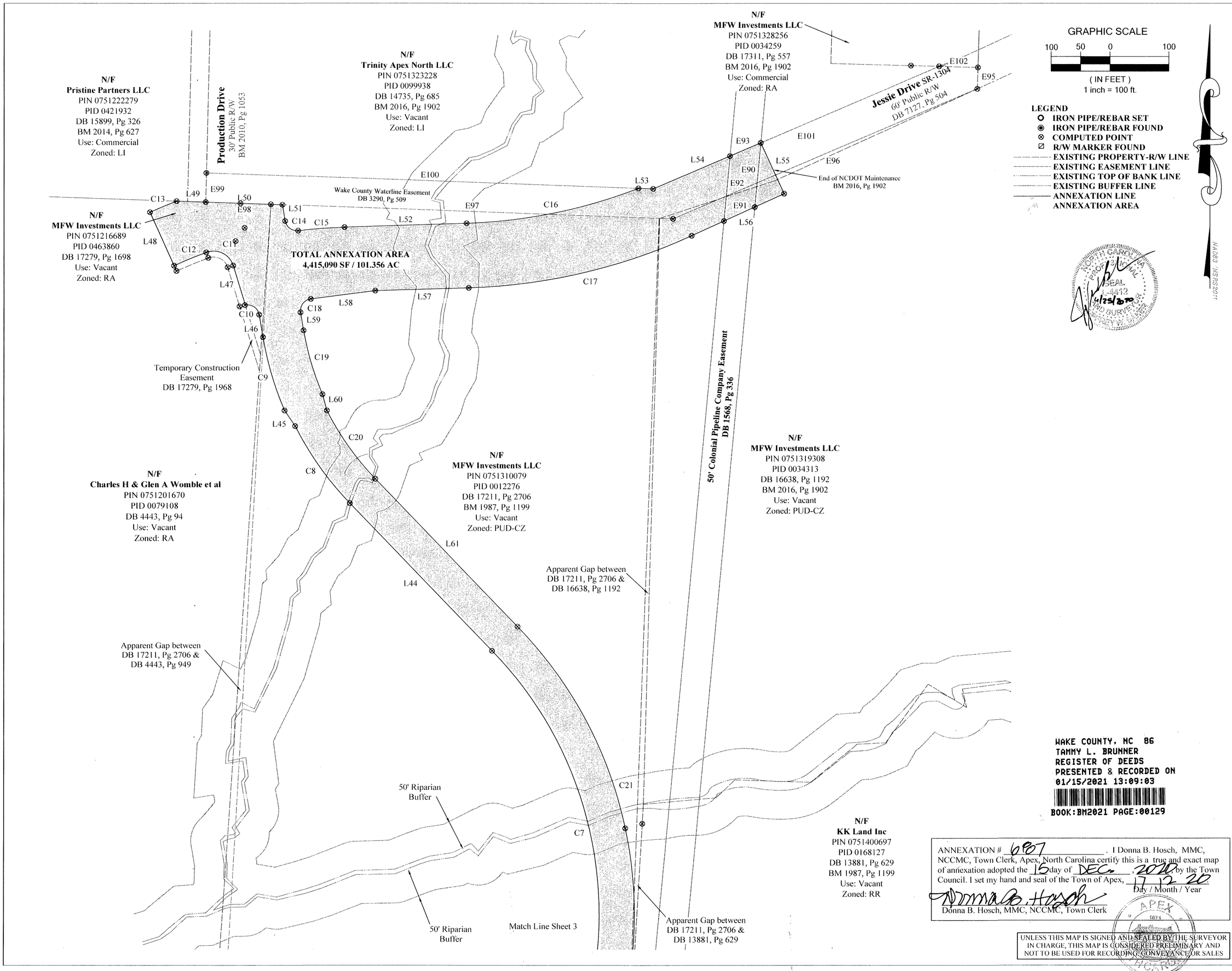


WAKE COUNTY, NC 86
TAMMY L. BRUNNER
REGISTER OF DEEDS
PRESENTED & RECORDED ON
01/15/2021 13:09:03
BOOK:BM2021 PAGE:00129

ANNEXATION # 687. I Donna B. Hosch, MMC, NCCMC, Town Clerk, Apex, North Carolina certify this is a true and exact map of annexation adopted the 15 day of DEC., 2020, by the Town Council. I set my hand and seal of the Town of Apex, 17 12 20
Day / Month / Year

Donna B. Hosch, MMC, NCCMC, Town Clerk

UNLESS THIS MAP IS SIGNED AND SEALED BY THE SURVEYOR IN CHARGE, THIS MAP IS CONSIDERED PRELIMINARY AND NOT TO BE USED FOR RECORDING, CONVEYANCE OR SALES

Bateman Civil Survey Company
Engineers ● Surveyors ● Planners
2524 Reliance Ave., Apex, NC 27539
Phone: 919.577.1080 Fax: 919.577.1081
NCBELS FIRM No. C-2378

OWNER
MFW INVESTMENTS LLC
114 BIRKLANDS DRIVE
CARY, NORTH CAROLINA, 27518

ANNEXATION MAP
FOR THE TOWN OF APEX
APEX, NC, WAKE COUNTY, WHITE OAK TOWNSHIP
REID# 0099938, 0463860, 0034313, 0012276, 0434123, 0449641, 0457588, 0040550, 0203126, 0033171, 0033292, 0089614 & 0203135

Designed By: N/A
Drawn By: JCH
Checked By: JWB
Scale: 1"=100'
Date: 03/24/2020
Project #:180585

SHEET
2 OF 7

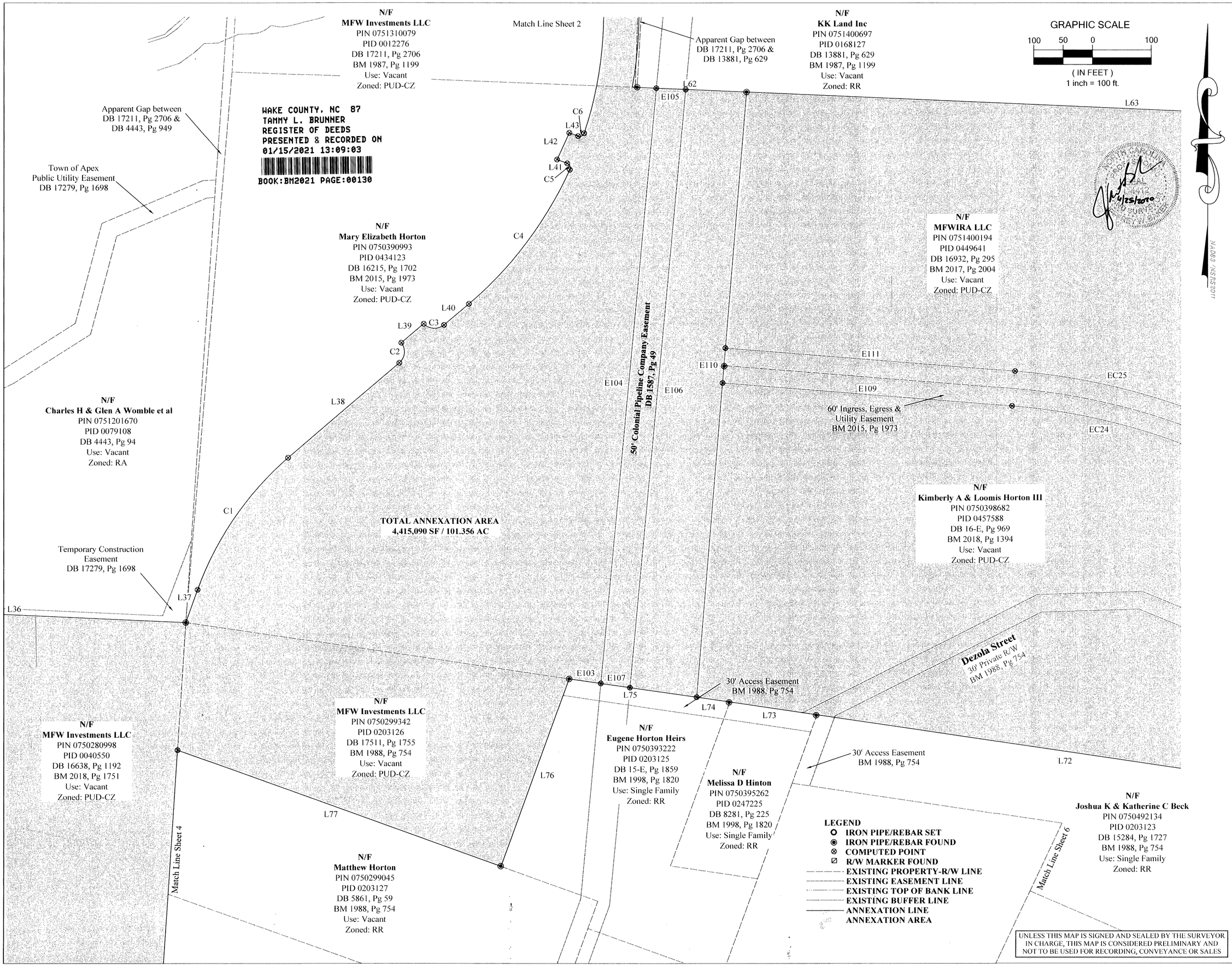


UNLESS THIS MAP IS SIGNED AND SEALED BY THE SURVEYOR IN CHARGE, THIS MAP IS CONSIDERED PRELIMINARY AND NOT TO BE USED FOR RECORDING, CONVEYANCE OR SALES

Bateman Civil Survey Company
Engineers ● Surveyors ● Planners
2524 Reliance Ave., Apex, NC 27539
Phone: 919.577.1080 Fax: 919.577.1081
NCBELS FIRM No. C-2378

OWNER
MFW INVESTMENTS LLC
114 BIRKLANDS DRIVE
CARY, NORTH CAROLINA, 27518

ANNEXATION MAP
FOR THE TOWN OF APEX
APEX, NC, WAKE COUNTY, WHITE OAK TOWNSHIP
REID# 0099938, 0463860, 0034313, 0012276, 0434123, 0449641, 0457588, 0040550, 0203126, 0033171, 0033292, 0089614 & 0203135

| | |
|---|---|
| Designed By: | N/A |
| Drawn By: | JCH |
| Checked By: | JWB |
| Scale: | 1"=100' |
| Date: | 03/24/2020 |
| Project #: | 180585 |

SHEET
3 OF 7

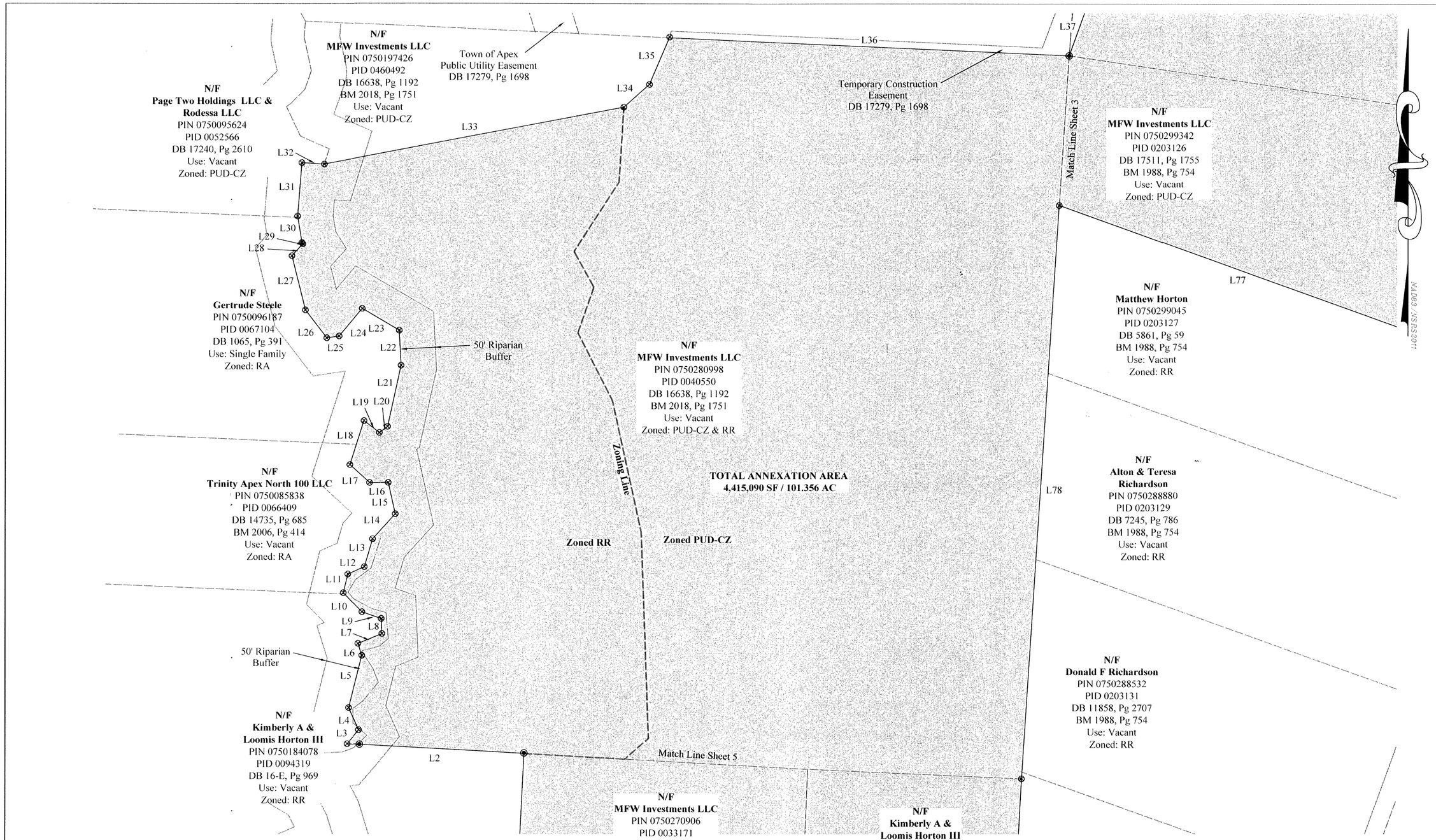


LEGEND

- IRON PIPE/REBAR SET
- IRON PIPE/REBAR FOUND
- COMPUTED POINT
- R/W MARKER FOUND
- EXISTING PROPERTY-R/W LINE
- EXISTING EASEMENT LINE
- EXISTING TOP OF BANK LINE
- EXISTING BUFFER LINE
- ANNEXATION LINE
- ANNEXATION AREA

GRAPHIC SCALE

100 50 0 100

( IN FEET )
1 inch = 100 ft.




WAKE COUNTY, NC 88
TAMMY L. BRUNNER
REGISTER OF DEEDS
PRESENTED & RECORDED ON
01/15/2021 13:09:03

BOOK:BM2021 PAGE:00131

UNLESS THIS MAP IS SIGNED AND SEALED BY THE SURVEYOR IN CHARGE, THIS MAP IS CONSIDERED PRELIMINARY AND NOT TO BE USED FOR RECORDING, CONVEYANCE OR SALES

**Bateman Civil Survey Company**
Engineers ● Surveyors ● Planners
2524 Reliance Ave., Apex, NC 27539
Phone: 919.577.1080 Fax: 919.577.1081
NCBELS FIRM No. C-2378

OWNER
MFW INVESTMENTS LLC
114 BIRKLANDS DRIVE
CARY, NORTH CAROLINA, 27518

ANNEXATION MAP
FOR THE TOWN OF APEX
APEX, NC, WAKE COUNTY, WHITE OAK TOWNSHIP
REID# 0099938, 0463860, 0034313, 0012276, 0434123, 0449641, 0457588, 0040550, 0203126, 0033171, 0033292, 0089614 & 0203135

| | |
|---|---|
| Designed By: | N/A |
| Drawn By: | JCH |
| Checked By: | JWB |
| Scale: | 1"=100' |
| Date: | 03/24/2020 |
| Project #: | 180585 |

SHEET
4 OF 7

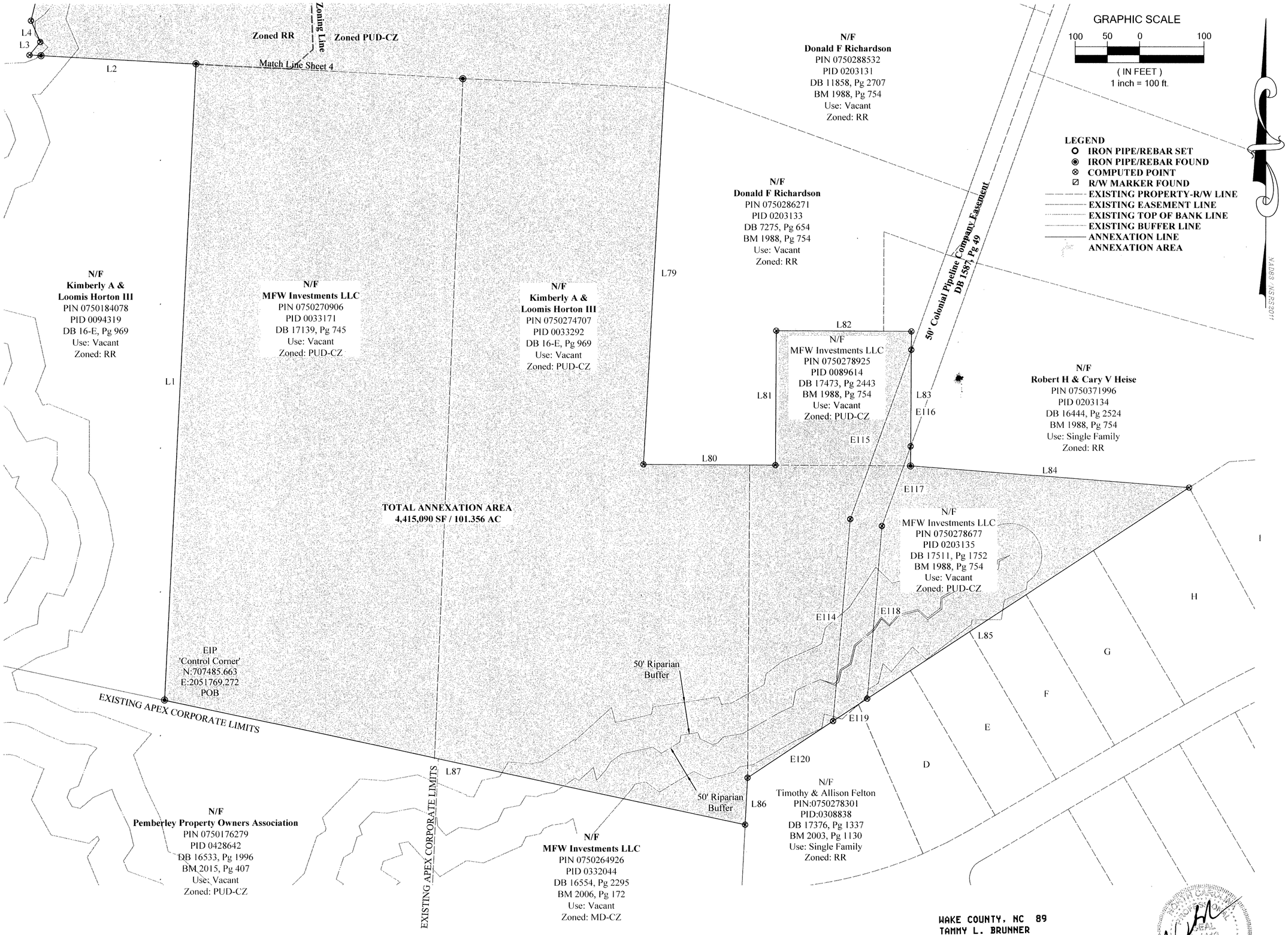


| Owner | PIN# | REID# | Deed Reference | Plat Reference | Use | Zoning |
|---|---|---|---|---|---|---|
| D) John J & Joyce T Falchi - | 0750279358 - | 0308837 - | DB 10836, Pg 2123 - | BM 2003, Pg 1130, - | Single Family - | RR |
| E) Todd C & Gloria C Young - | 0750370454 - | 0308836 - | DB 11069, Pg 476 - | BM 2003, Pg 1130, - | Single Family - | RR |
| F) Dennis & Roberta Dale - | 0750371540 - | 0308835 - | DB 11800, Pg 97 - | BM 2003, Pg 1130, - | Single Family - | RR |
| G) Richard J & Mary A Stewart - | 0750372555 - | 0308834 - | DB 11012, Pg 2141 - | BM 2003, Pg 1130, - | Single Family - | RR |
| H) Robert E & Krista B Cathey III - | 0750373664 - | 0308833 - | DB 11988, Pg 1801 - | BM 2003, Pg 1130, - | Single Family - | RR |
| I) Amanda C & Steven A Rhodes - | 0750375700 - | 0308832 - | DB 12006, Pg 1186 - | BM 2003, Pg 1130, - | Single Family - | RR |

WAKE COUNTY, NC 89
TAMMY L. BRUNNER
REGISTER OF DEEDS
PRESENTED & RECORDED ON
01/15/2021 13:09:03
BOOK:BM2021 PAGE:00132

4/25/2020

UNLESS THIS MAP IS SIGNED AND SEALED BY THE SURVEYOR IN CHARGE, THIS MAP IS CONSIDERED PRELIMINARY AND NOT TO BE USED FOR RECORDING, CONVEYANCE OR SALES

Bateman Civil Survey Company
Engineers ● Surveyors ● Planners
2524 Reliance Ave., Apex, NC 27539
Phone: 919.577.1080 Fax: 919.577.1081
NCBELS FIRM No. C-2378

OWNER
MFW INVESTMENTS LLC
114 BIRKLANDS DRIVE
CARY, NORTH CAROLINA, 27518

ANNEXATION MAP
FOR THE TOWN OF APEX
APEX, NC, WAKE COUNTY, WHITE OAK TOWNSHIP
REID# 0099938, 0463860, 0034313, 0012276, 0434123, 0449641, 0457588, 0040550, 0203126, 0033171, 0033292, 0089614 & 0203135

| | |
|---|---|
| Designed By: | N/A |
| Drawn By: | JCH |
| Checked By: | JWB |
| Scale: | 1"=100' |
| Date: | 03/24/2020 |
| Project #: | 180585 |

SHEET
5 OF 7

**N/F**
**KK Land Inc**
PIN 0751400697
PID 0168127
DB 13881, Pg 629
BM 1987, Pg 1199
Use: Vacant
Zoned: RR

**N/F**
**Sirrhan & Joseph A Griffin**
PIN 0751407981
PID 0168126
DB 8778, Pg 2496
BM 1987, Pg 1199
Use: Vacant
Zoned: RR

L63
L64
L65
L66
L67
L68
L69
L70
L71
L72

**N/F**
**MFWIRA LLC**
PIN 0751400194
PID 0449641
DB 16932, Pg 295
BM 2017, Pg 2004
Use: Vacant
Zoned: PUD-CZ

**TOTAL ANNEXATION AREA**
**4,415,090 SF / 101.356 AC**

**N/F**
**Dwight M Wright**
PIN 0750498888
PID 0104750
DB 16215, Pg 1702
BM 2017, Pg 2004
Use: Single Family
Zoned: RR

EC25
EC24
EC26
EC23
C28
C29
C30
E112
E108

**N/F**
**Kimberly A & Loomis Horton III**
PIN 0750398682
PID 0457588
DB 16-E, Pg 969
BM 2018, Pg 1394
Use: Vacant .
Zoned: PUD-CZ

60' Ingress, Egress & Utility Easement
BM 2015, Pg 1973

**Dezola Street**
30' Private R/W
BM 1988, Pg 754

50' Riparian Buffer

50' Riparian Buffer

**N/F**
**David J Martin**
PIN 0750591257
PID 0143656
DB 19-E, Pg 3565
BM 2017, Pg 2004
Use: Single Family
Zoned: RR

**N/F**
**Joshua K & Katherine C Beck**
PIN 0750492134
PID 0203123
DB 15284, Pg 1727
BM 1988, Pg 754
Use: Single Family
Zoned: RR

**N/F**
**Kimberly A & Loomis Horton III**
PIN 0750495371
PID 0434122
DB 16-E, Pg 969
BM 2018, Pg 1394
Use: Vacant
Zoned: PUD-CZ

**N/F**
**David J Martin**
PIN 0750590018
PID 0467691
DB 19-E, Pg 3565
BM 2019, Pg 172
Use: Single Family
Zoned: RR

**Smith Road SR-1303**
60' Public Right of Way
BM 1988, Pg 754

Match Line Sheet 3

GRAPHIC SCALE
100 50 0 100
( IN FEET )
1 inch = 100 ft.

**LEGEND**
- IRON PIPE/REBAR SET
- IRON PIPE/REBAR FOUND
- COMPUTED POINT
- R/W MARKER FOUND
- EXISTING PROPERTY-R/W LINE
- EXISTING EASEMENT LINE
- EXISTING TOP OF BANK LINE
- EXISTING BUFFER LINE
- ANNEXATION LINE
- ANNEXATION AREA

NAD83 (NSRS 2011)

WAKE COUNTY, NC 90
TAMMY L. BRUNNER
REGISTER OF DEEDS
PRESENTED & RECORDED ON
01/15/2021 13:09:03
BOOK:BM2021 PAGE:00133

SOUTH CAROLINA PROFESSIONAL SEAL 34412 LAND SURVEYOR

UNLESS THIS MAP IS SIGNED AND SEALED BY THE SURVEYOR IN CHARGE, THIS MAP IS CONSIDERED PRELIMINARY AND NOT TO BE USED FOR RECORDING, CONVEYANCE OR SALES

**Bateman Civil Survey Company**
Engineers ● Surveyors ● Planners
2524 Reliance Ave., Apex, NC 27539
Phone: 919.577.1080 Fax: 919.577.1081
NCBELS FIRM No. C-2378

OWNER
MFW INVESTMENTS LLC
114 BIRKLANDS DRIVE
CARY, NORTH CAROLINA 27518

ANNEXATION MAP
FOR THE TOWN OF APEX
APEX, NC, WAKE COUNTY, WHITE OAK TOWNSHIP
REID# 0099938, 0463860, 0034313, 0012276, 0434123, 0449641, 0457588, 0040550, 0203126, 0033171, 0033292, 0089614 & 0203135

| | |
|---|---|
| Designed By: | N/A |
| Drawn By: | JCH |
| Checked By: | JWB |
| Scale: | 1"=100' |
| Date: | 03/24/2020 |
| Project #: | 180585 |

SHEET
6 OF 7

**Annexation Legal Description for REID# 0099938, 0463860, 0034313, 0012276, 0434123, 0449641, 0457588, 0040550, 0203126, 0033171, 0033292, 0089614 & 0203135**

All that certain parcels of land, situated in Apex, Wake County, North Carolina, being known as REID# 0099938, 0463860, 0034313, 0012276, 0434123, 0449641, 0457588, 0040550, 0203126, 0033171, 0033292, 0089614 & 0203135, Wake County Records, and being more particularly described as follows:

Beginning at an Iron Pipe found at the South West property corner of MFW Investments LLC (REID 0033171, DB 17139, PG 745), Wake County Records and South East property corner of Kimberly A & Loomis Horton III (REID 0094319, DB 16-E, PG 969), Wake County records and being designated as the Point of Beginning as shown on map made by Bateman Civil Survey Company, dated 3/24/2020 and entitled "Annexation Map for the Town of Apex" Apex, NC, Wake County, White Oak Township, REID# 0099938, 0463860, 0034313, 0012276, 0434123, 0449641, 0457588, 0040550, 0203126, 0033171, 0033292, 0089614 & 0203135, having State Plane Coordinates N:707485.663, E:2051769.272;
Thence N02°44'07"E, 994.82' to an Iron Pipe found; thence N86°50'22"W, 258.73' to an Iron Pipe found; thence N39°30'30"E, 26.26' to a point; thence N23°42'22"W, 35.95' to a point; thence N13°54'09"E, 79.15' to a point; thence N17°33'13"W, 18.56' to a point; thence N67°29'17"E, 37.85' to a point; thence N02°16'21"W, 22.18' to a point; thence N70°27'02"W, 29.99' to a point; thence N44°05'42"W, 39.31' to a point; thence N13°50'46"E, 28.19' to a point; thence N66°20'10"E, 26.21' to a point; thence N16°14'26"E, 42.75' to a point; thence N42°08'44"E, 49.37' to a point; thence N12°33'20"W, 47.21' to a point; thence S89°48'05"W, 27.39' to a point; thence N47°19'12"W, 39.00' to a point; thence N17°31'45"E, 67.92' to a point; thence S52°16'45"E, 28.62' to a point; thence N53°21'20"E, 14.91' to a point; thence N12°12'41"E, 91.90' to a point; thence N02°59'42"W, 51.52' to a point; thence N59°30'21"W, 62.80' to a point; thence S39°54'45"W, 52.49' to a point; thence S81°30'52"W, 18.15' to a point; thence N37°30'45"W, 51.54' to a point; thence N14°00'20"W, 81.92' to a point; thence N41°47'32"E, 23.66' to a point; thence N31°38'22"W, 1.96' to a point; thence N09°34'30"W, 39.41' to a point; thence N04°27'00"E, 78.83' to a point; thence S86°25'14"E, 33.05' to a point; thence N79°11'30"E, 445.19' to a point; thence N48°13'38"E, 50.09' to a point; thence N22°54'33"E, 74.47' to a point; thence S87°24'13"E, 584.86' to a point; thence N19°40'32"E, 59.76' to a point; thence a curve to the Right having a Radius of 540.00', a Length of 280.51' and a Direction of N34°33'25"E, 277.37' to a point; thence N49°26'19"E, 244.69' to a point; thence a curve to the Left having a Radius of 25.00', a Length of 38.27' and a Direction of N05°35'05"E, 34.64' to a point; thence N49°26'19"E, 50.04' to a point; thence a curve to the Right having a Radius of 25.00', a Length of 38.27' and a Direction of S86°42'27"E, 34.64' to a point; thence N49°26'19"E, 55.76' to a point; thence a curve to the Left having a Radius of 655.00', a Length of 288.86' and a Direction of N36°48'17"E, 286.52' to a point; thence a curve to the Left having a Radius of 8.00', a Length of 13.10' and a Direction of N22°43'53"W, 11.68' to a point; thence N69°38'01"W, 18.54' to a point; thence N24°32'45"E, 50.21' to a point; thence S69°38'01"E, 15.90' to a point; thence a curve to the Left having a Radius of 8.00', a Length of 12.85' and a Direction of N64°20'28"E, 11.51' to a point; thence a curve to the Left having a Radius of 655.00', a Length of 710.34' and a Direction of N12°45'08"W, 676.04' to a point; thence N43°49'14"W, 349.36' to a point; thence a curve to the Right having a Radius of 540.00', a Length of 161.66' and a Direction of N35°14'40"W, 161.05' to a point; thence N33°53'34"W, 32.27' to a point; thence a curve to the Right having a Radius of 545.00', a Length of 131.00' and a Direction of N16°24'52"W, 130.68' to a point; thence N09°31'44"W, 39.04' to a point; thence a curve to the Left having a Radius of 20.00', a Length of 32.64' and a Direction of N56°17'17"W, 29.14' to a point; thence N17°01'28"W, 70.37' to a point; thence a curve to the Left having a Radius of 35.00, a Length of 57.08' and a Direction of N63°44'30"W, 50.96' to a point; thence a curve to the Left having a Radius of 899.85', a Length of 59.13' and a Direction of S67°39'31"W, 59.12' to a point; thence N24°13'25"W, 100.00' to a point; thence a curve to the Right having a Radius of 1,000.00', a Length of 48.98' and a Direction of N67°10'47"E, 48.98' to a point; thence S87°58'54"E, 49.66' to a point; thence S87°58'17"E, 130.39' to a point; thence S09°31'44"E, 28.27' to a point; thence a curve to the Left having a Radius of 20.00', a Length of 30.32' and a Direction of S52°57'16"E, 27.50' to a point; thence a curve to the Right having a Radius of 1,005.00', a Length of 79.07' and a Direction of N85°52'26"E, 79.05' to a point; thence N88°07'40"E, 207.65' to a point; thence a curve to the Left having a Radius of 880.00', a Length of 299.33' and a Direction of N78°22'59"E, 297.89' to a point; thence S87°54'41"E, 25.01' to a point; thence N66°41'16"E, 199.17' to a point; thence S24°31'49"E, 95.91' to a point; thence S65°28'11"W, 172.84' to a point; thence a curve to the Right having a Radius of 990.00', a Length of 391.50' and a Direction of S76°47'55"W, 388.96' to a point; thence S88°15'11"W, 158.83' to a point; thence S82°47'37"W, 110.66' to a point; thence a curve to the Left having a Radius of 20.00', a Length of 32.23' and a Direction of S36°37'57"W, 28.85' to a point; thence S09°31'44"E, 31.05' to a point; thence a curve to the Left having a Radius of 475.00', a Length of 114.32' and a Direction of S16°25'26"E, 114.05' to a point; thence S14°55'06"E, 28.54' to a point; thence a curve to the Left having a Radius of 480.01', a Length of 143.51' and a Direction of S35°15'20"E, 142.97' to a point; thence S43°49'14"E, 349.36' to a point; thence a curve to the Right having a Radius of 715.00', a Length of 674.37' and a Direction of S16°48'02"E, 649.65' to a point; thence S87°28'46"E, 195.69' to a point; thence S87°28'09"E, 1,310.85' to a point; thence S87°31'29"E, 16.61' to a point; thence S24°36'54"W, 730.39' to a point; thence a curve to the Right having a Radius of 1097.98', a Length of 143.09' and a Direction of S49°31'31"E, 142.99' to a point; thence S45°47'31"E, 153.36' to a point; thence a curve to the Right having a Radius of 880.00', a Length of 231.46' and a Direction of S53°15'39"E, 230.79' to a point; thence S45°47'31"W, 376.61' to a point; thence S35°44'56"W, 30.33' to a point; thence S35°44'56"W, 30.33' to a point; thence N45°47'31"W, 385.60' to a point; thence a curve to the Left having a Radius of 820.00', a Length of 90.03' and a Direction of N48°52'15"E, 89.98' to a point; thence S66°31'41"W, 375.96' to a point; thence N81°31'47"W, 861.72' to a point; thence N81°28'50"W, 149.98' to a point; thence N81°33'25"W, 56.41' to a point; thence N81°44'30"W, 219.28' to a point; thence S19°51'42"W, 340.91' to a point; thence N70°08'18"W, 585.61' to a point; thence S03°40'12"W, 844.63' to a point; thence S03°03'45"W, 587.47' to a point; thence S89°39'02"E, 205.00' to a point; thence N00°17'07"E, 209.76' to a point; thence S89°42'53"E, 210.00' to a point; thence S00°17'07"W, 210.00' to a point; thence S85°26'31"E, 434.14' to a point; thence S56°32'07"W, 821.71' to a point; thence S02°53'36"W, 73.32' to a point; thence N77°53'40"W, 922.38' to a point;

said Iron Pipe being the Point of Beginning.
Said Annexation contains 4,415,090 square feet / 101.356 acres, more or less.

| Easement Line Table | | |
|---|---|---|
| Line # | Direction | Length |
| E90 | S05°16'12"W | 110.52 |
| E91 | S65°28'11"W | 57.62 |
| E92 | N05°16'12"E | 111.92 |
| E93 | N66°41'16"E | 56.94 |
| E95 | S01°32'39"W | 36.51 |
| E96 | S66°43'25"W | 562.77 |
| E97 | N87°54'57"W | 683.87 |
| E98 | N87°58'54"W | 110.69 |
| E99 | N01°20'12"E | 50.18 |
| E100 | S87°54'41"E | 759.44 |
| E101 | N66°41'16"E | 529.20 |
| E102 | S88°26'17"E | 65.92 |
| E103 | S81°44'30"E | 54.38 |
| E104 | N05°16'12"E | 1024.00 |
| E105 | S87°27'56"E | 50.06 |
| E106 | S05°16'12"W | 1029.00 |
| E107 | N81°44'30"W | 50.07 |
| E108 | N45°47'31"W | 767.73 |
| E109 | N85°20'31"W | 494.97 |
| E110 | N04°39'29"E | 60.00 |
| E111 | S85°20'31"E | 494.97 |
| E112 | S45°47'31"E | 758.81 |
| E114 | N04°45'16"E | 317.54 |
| E115 | N19°40'04"E | 280.91 |
| E116 | S00°17'07"W | 150.66 |
| E117 | S19°40'04"W | 132.24 |
| E118 | S04°45'16"W | 271.62 |
| E119 | S56°32'07"W | 63.64 |
| E120 | N56°32'07"E | 159.14 |

| Curve Table | | | | | | |
|---|---|---|---|---|---|---|
| Curve # | Radius | Length | Delta | Direction | Chord | Tangent |
| C1 | 540.00 | 280.51 | 029°45'47" | N34°33'25"E | 277.37 | 143.50 |
| C2 | 25.00 | 38.27 | 087°42'27" | N05°35'05"E | 34.64 | 24.02 |
| C3 | 25.00 | 38.27 | 087°42'27" | S86°42'27"E | 34.64 | 24.02 |
| C4 | 655.00 | 288.86 | 025°16'04" | N36°48'17"E | 286.52 | 146.82 |
| C5 | 8.00 | 13.10 | 093°48'15" | N22°43'53"W | 11.68 | 8.55 |
| C6 | 8.00 | 12.85 | 092°03'02" | N64°20'28"E | 11.51 | 8.29 |
| C7 | 655.00 | 710.34 | 062°08'11" | N12°45'08"W | 676.04 | 394.63 |
| C8 | 540.00 | 161.66 | 017°09'08" | N35°14'40"W | 161.05 | 81.44 |
| C9 | 545.00 | 131.00 | 013°46'17" | N16°24'52"W | 130.68 | 65.81 |
| C10 | 20.00 | 32.64 | 093°31'06" | N56°17'17"W | 29.14 | 21.27 |
| C11 | 35.00 | 57.08 | 093°26'04" | N63°44'30"W | 50.96 | 37.16 |
| C12 | 899.85 | 59.13 | 003°45'54" | S67°39'31"W | 59.12 | 29.58 |
| C13 | 1000.00 | 48.98 | 002°48'24" | N67°10'47"E | 48.98 | 24.50 |
| C14 | 20.00 | 30.32 | 086°51'05" | S52°57'16"E | 27.50 | 18.93 |
| C15 | 1005.00 | 79.07 | 004°30'28" | N85°52'26"E | 79.05 | 39.56 |
| C16 | 880.00 | 299.33 | 019°29'22" | N78°22'59"E | 297.89 | 151.13 |
| C17 | 990.00 | 391.50 | 022°39'29" | S76°47'55"W | 388.96 | 198.34 |
| C18 | 20.00 | 32.23 | 092°19'21" | S36°37'57"W | 28.85 | 20.83 |
| C19 | 475.00 | 114.32 | 013°47'24" | S16°25'26"E | 114.05 | 57.44 |
| C20 | 480.01 | 143.51 | 017°07'47" | S35°15'20"E | 142.97 | 72.29 |
| C21 | 715.00 | 674.37 | 054°02'25" | S16°48'02"E | 649.65 | 364.63 |
| C28 | 1097.98 | 143.09 | 007°28'00" | S49°31'31"E | 142.99 | 71.65 |
| C29 | 880.00 | 231.46 | 015°04'12" | S53°15'39"E | 230.79 | 116.40 |
| C30 | 820.00 | 90.03 | 006°17'26" | N48°52'15"W | 89.98 | 45.06 |

| Easement Curve Table | | | | | | |
|---|---|---|---|---|---|---|
| Curve # | Radius | Length | Delta | Direction | Chord | Tangent |
| EC23 | 1070.35 | 411.40 | 022°01'20" | N56°49'40"W | 408.87 | 208.27 |
| EC24 | 1065.04 | 325.80 | 017°31'38" | N76°36'09"W | 324.53 | 164.18 |
| EC25 | 1127.96 | 344.10 | 017°28'44" | S76°36'09"E | 342.77 | 173.40 |
| EC26 | 1127.99 | 434.53 | 022°04'18" | S56°49'40"E | 431.85 | 219.99 |

| Line Table | | |
|---|---|---|
| Line # | Direction | Length |
| L1 | N02°44'07"E | 994.82 |
| L2 | N86°50'22"W | 258.73 |
| L3 | N39°30'30"E | 26.26 |
| L4 | N23°42'22"W | 35.95 |
| L5 | N13°54'09"E | 79.15 |
| L6 | N17°33'13"W | 18.56 |
| L7 | N67°29'17"E | 37.85 |
| L8 | N02°16'21"W | 22.18 |
| L9 | N70°27'02"W | 29.99 |
| L10 | N44°05'42"W | 39.31 |
| L11 | N13°50'46"E | 28.19 |
| L12 | N66°20'10"E | 26.21 |
| L13 | N16°14'26"E | 42.75 |
| L14 | N42°08'44"E | 49.37 |
| L15 | N12°33'20"W | 47.21 |
| L16 | S89°48'05"W | 27.39 |
| L17 | N47°19'12"W | 39.00 |
| L18 | N17°31'45"E | 67.92 |
| L19 | S52°16'45"E | 28.62 |
| L20 | N53°21'20"E | 14.91 |
| L21 | N12°12'41"E | 91.90 |
| L22 | N02°59'42"W | 51.52 |
| L23 | N59°30'21"W | 62.80 |
| L24 | S39°54'45"W | 52.49 |
| L25 | S81°30'52"W | 18.15 |
| L26 | N37°30'45"W | 51.54 |
| L27 | N14°00'20"W | 81.92 |
| L28 | N41°47'32"E | 23.66 |
| L29 | N31°38'22"W | 1.96 |
| L30 | N09°34'30"W | 39.41 |
| L31 | N04°27'00"E | 78.83 |
| L32 | S86°25'14"E | 33.05 |
| L33 | N79°11'30"E | 445.19 |
| L34 | N48°13'38"E | 50.09 |
| L35 | N22°54'33"E | 74.47 |
| L36 | S87°24'13"E | 584.86 |
| L37 | N19°40'32"E | 59.76 |
| L38 | N49°26'19"E | 244.69 |
| L39 | N49°26'19"E | 50.04 |
| L40 | N49°26'19"E | 55.76 |
| L41 | N69°38'01"W | 18.54 |
| L42 | N24°32'45"E | 50.21 |
| L43 | S69°38'01"E | 15.90 |
| L44 | N43°49'14"W | 349.36 |

| Line Table | | |
|---|---|---|
| Line # | Direction | Length |
| L45 | N33°53'34"W | 32.27 |
| L46 | N09°31'44"W | 39.04 |
| L47 | N17°01'28"W | 70.37 |
| L48 | N24°13'25"W | 100.00 |
| L49 | S87°58'54"E | 49.66 |
| L50 | S87°58'17"E | 130.39 |
| L51 | S09°31'44"E | 28.27 |
| L52 | N88°07'40"E | 207.65 |
| L53 | S87°54'41"E | 25.01 |
| L54 | N66°41'16"E | 199.17 |
| L55 | S24°31'49"E | 95.91 |
| L56 | S65°28'11"W | 172.84 |
| L57 | S88°15'11"W | 158.83 |
| L58 | S82°47'37"W | 110.66 |
| L59 | S09°31'44"E | 31.05 |
| L60 | S14°55'06"E | 28.54 |
| L61 | S43°49'14"E | 349.36 |
| L62 | S87°28'46"E | 195.69 |
| L63 | S87°28'09"E | 1310.85 |
| L64 | S87°31'29"E | 16.61 |
| L65 | S24°36'54"W | 730.39 |
| L66 | S45°47'31"E | 153.36 |
| L67 | S45°47'31"E | 376.61 |
| L68 | S35°44'56"W | 30.33 |
| L69 | S35°44'56"W | 30.33 |
| L70 | N45°47'31"W | 385.60 |
| L71 | S66°31'41"W | 375.96 |
| L72 | N81°31'47"W | 861.72 |
| L73 | N81°28'50"W | 149.98 |
| L74 | N81°33'25"W | 56.41 |
| L75 | N81°44'30"W | 219.28 |
| L76 | S19°51'42"W | 340.91 |
| L77 | N70°08'18"W | 585.61 |
| L78 | S03°40'12"W | 844.63 |
| L79 | S03°03'45"W | 587.47 |
| L80 | S89°39'02"E | 205.00 |
| L81 | N00°17'07"E | 209.76 |
| L82 | S89°42'53"E | 210.00 |
| L83 | S00°17'07"W | 210.00 |
| L84 | S85°26'31"E | 434.14 |
| L85 | S56°32'07"W | 821.71 |
| L86 | S02°53'36"W | 73.32 |
| L87 | N77°53'40"W | 922.38 |

NORTH CAROLINA PROFESSIONAL SEAL L-4412 LAND SURVEYOR JOHN W. BATEMAN IV
4/25/2020

WAKE COUNTY, NC 91
TAMMY L. BRUNNER
REGISTER OF DEEDS
PRESENTED & RECORDED ON
01/15/2021 13:09:03
BOOK:BM2021 PAGE:00134

UNLESS THIS MAP IS SIGNED AND SEALED BY THE SURVEYOR IN CHARGE, THIS MAP IS CONSIDERED PRELIMINARY AND NOT TO BE USED FOR RECORDING, CONVEYANCE OR SALES

**Bateman Civil Survey Company**
Engineers ● Surveyors ● Planners
2524 Reliance Ave., Apex, NC 27539
Phone: 919.577.1080 Fax: 919.577.1081
NCBELS FIRM No. C-2378

OWNER
MFW INVESTMENTS LLC
114 BIRKLANDS DRIVE
CARY, NORTH CAROLINA, 27518

ANNEXATION MAP
FOR THE TOWN OF APEX
APEX, NC, WAKE COUNTY, WHITE OAK TOWNSHIP
REID# 0099938, 0463860, 0034313, 0012276, 0434123, 0449641, 0457588, 0040550, 0203126, 0033171, 0033292, 0089614 & 0203135

| | |
|---|---|
| Designed By: | N/A |
| Drawn By: | JCH |
| Checked By: | JWB |
| Scale: | |
| Date: | 03/24/2020 |
| Project #: | 180585 |

SHEET 7 OF 7

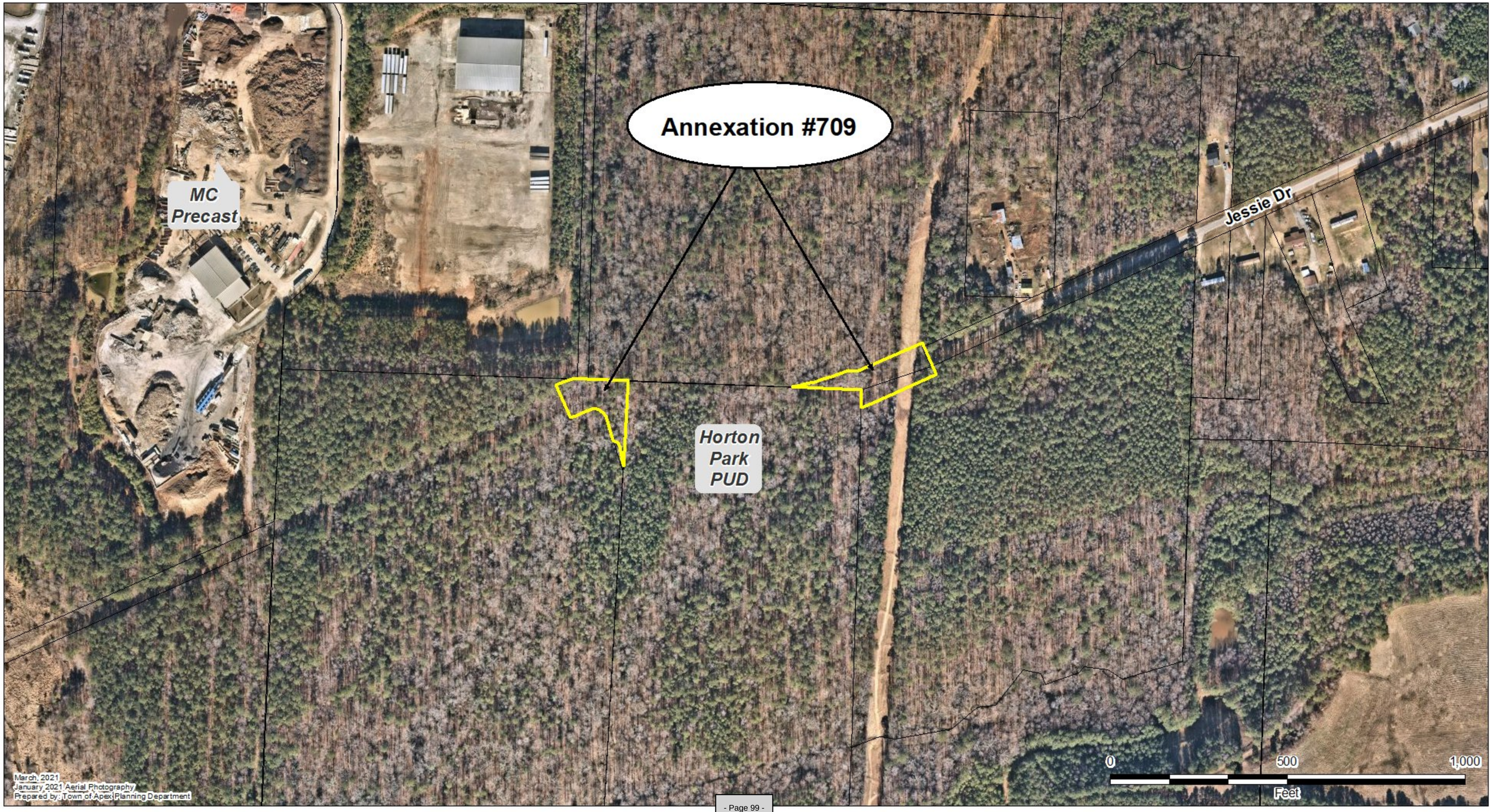
Annexation #709
MC Precast
Horton Park PUD
Jessie Dr
0
500
1,000
Feet
March, 2021
January 2021 Aerial Photography
Prepared by: Town of Apex Planning Department

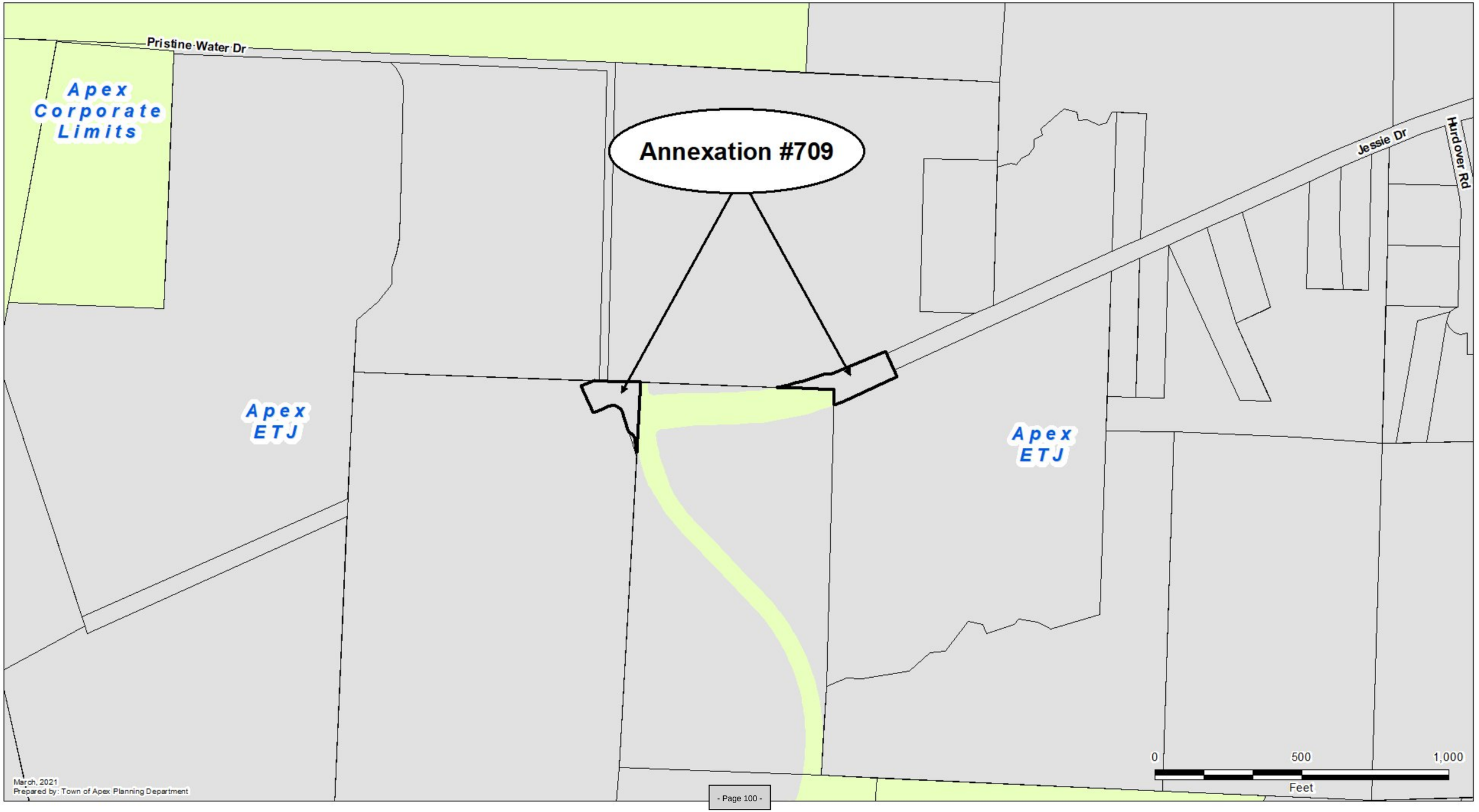
Pristine Water Dr
Apex Corporate Limits
Annexation #709
Jessie Dr
Hurdover Rd
Apex ETJ
Apex ETJ
0
500
1,000
Feet
March, 2021
Prepared by: Town of Apex Planning Department

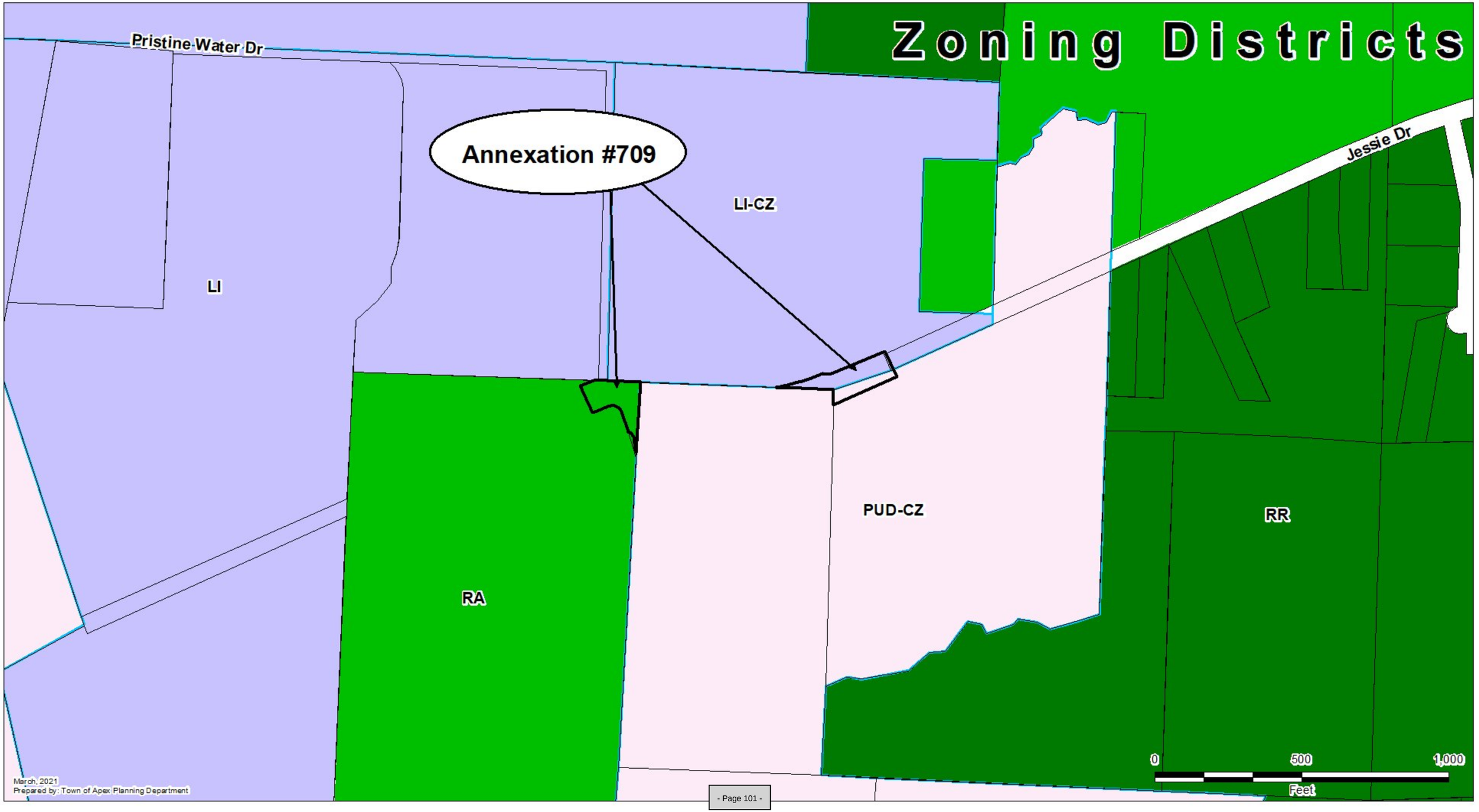
Zoning Districts
Pristine Water Dr
Annexation #709
LI-CZ
LI
Jessie Dr
PUD-CZ
RR
RA
0
500
1,000
Feet
March, 2021
Prepared by: Town of Apex Planning Department

# | Agenda Item | cover sheet

for consideration by the Apex Town Council

Item Type: CONSENT AGENDA
Meeting Date: March 23,2021

## Item Details

Presenter(s): Megan Pendell, Sustainability Coordinator
Department(s): Water Resources

Requested Motion

Motion to approve Sai Pranathi Sana as a new member on the Environmental Advisory Board (EAB).

Approval Recommended?

Yes

Item Details

A new member is set to replace the membership seat that Jessica Wilkerson left upon her resignation. The new member is Sai Pranathi Sana and membership service will begin on April 15, 2021.

Attachments

- Cognito Interest Form

**Donna Hosch**

**From:** Cognito Forms <notifications@cognitoforms.com>
**Sent:** Monday, February 17, 2020 11:47 AM
**To:** Donna Hosch; Stacie Galloway
**Subject:** Advisory Board Interest Form - Sai Pranathi Sana

**Notice: This message is from an external sender.**
Do not click links or open attachments unless you trust the sender, and can verify that the content is safe.

# Town of Apex

## Advisory Board Interest Form

## Entry Details

| | |
|---|---|
| I'M INTERESTED IN SERVING ON... | Environmental Advisory Board |
| HOW DID YOU HEAR ABOUT THIS OPPORTUNITY TO SERVE? | Town Website |
| LEGAL NAME | Sai Pranathi Sana |
| PREFERRED FIRST NAME | Pranathi |
| ADDRESS | 2108 Vittorio Lane, Apex, North Carolina 27502 |
| DO YOU LIVE WITHIN THE APEX TOWN LIMITS? | Yes |
| EMAIL | ssana@live.unc.edu |
| MOBILE PHONE | (336) 682-0189 |
| TELL US WHY YOU WOULD LIKE TO SERVE? | I am a graduate student pursuing a master's degree in health administration. I am very interested in non-clinical drivers of health, and in this case, the environment. I am also interested in policy and the |

| | |
|---|---|
| | implications of certain policies on the health of the citizens, and I would like to get firsthand experience on how these two play out. |
| **PLEASE LIST ANY EDUCATION, SPECIAL SKILLS, OR EXPERIENCE YOU HAVE THAT WOULD BE USEFUL WHILE CONSIDERING THIS FORM.** | Master of Health Administration - UNC Gillings School of Global Public Health<br>Research Assistant - NC DHHS Division of Public Health - Worked on a project that analyzed citizens' concerns about the Chemours plant that was contaminating their water. |
| **IF YOU NOW SERVE, OR HAVE PREVIOUSLY SERVED ON ANY TOWN BOARDS, COMMISSIONS OR COMMITTEES, PLEASE LIST THE COMMITTEES AND DATES SERVED.** | n/a |

# | Agenda Item | cover sheet

for consideration by the Apex Town Council

Item Type: CONSENT AGENDA

Meeting Date: March 23,2021

## Item Details

Presenter(s): Russell Dalton, Sr. Transportation Engineer

Department(s): Public Works & Transportation

Requested Motion

Motion to approve a reimbursement agreement between the Town and NCDOT for construction of TM-0026, bus stops to serve GoApex Route 1, and authorize the Interim Town Manager to execute the same.

Approval Recommended?

Yes

Item Details

Design of bus stops to serve the GoApex Route 1 bus route is currently in progress with anticipated construction in 2021. TM-0026 has been approved in the NCDOT Locally Administered Projects Program (LAPP) to receive federal funds toward reimbursement of construction activities for these bus stops.

This agreement provides for reimbursement of up to 70% of eligible construction costs based on an estimate of $610,000, for a total of up to $427,000 in reimbursement. NCDOT staff time for review and inspections will reduce the total amount of funding available under the agreement for reimbursement as typical for this type of agreement. However, contingencies were assumed in the project application intended to offset the impact of NCDOT staff time on eligible reimbursement. In addition, Apex entered into a Capital Funding Agreement with GoTriangle and CAMPO in the amount of $207,000 in October 2020 to obtain the local share of funds toward this project.

Attachments

- NCDOT Agreement ID #9728

# Executive Summary

The Executive Summary is a summation of this agreement and is not intended to be used as the agreement between the Department (North Carolina Department of Transportation) and the Party (Entity).

**Entity:** Town of Apex **County:** Wake

**TIP:** TM-0026

**Project:** Go Apex Route 1 Bus Stop Improvements

**Scope:** construction of improvements at 41 bus stops to serve a local bus circulator route. Improvements include providing pedestrian connections and amenities such as benches, trash receptacles, bike parking, shelter, route information and lighting.

**Eligible Activities:**

| | | |
|---|---|---|
| **PE** | _____ | Design |
| | | Environmental |
| **ROW** | _____ | ROW Acquisition |
| | | Utility Relocation |
| **CON** | 49605.3.1 | Construction |
| **OTHER** | 0501051 | |
| **FEDERAL-AID** | | |

| Fund Source | Federal Funds Amount | Reimbursement Rate | Non-Federal Match $ | Non-Federal Match Rate |
|---|---|---|---|---|
| STBG-DA | $427,000 | 70 % | $183,000 | 30 % |
| **Total Estimated Cost** | | **$610,000** | | |

**Responsibility:** The Town of Apex shall be responsible for all aspects of the project.

NORTH CAROLINA

WAKE COUNTY

NORTH CAROLINA DEPARTMENT OF TRANSPORTATION

AND

TOWN OF APEX

**LOCALLY ADMINISTERED PROJECT - FEDERAL**

| | | |
|---|---|---|
| DATE: | 3/3/2021 | |
| TIP #: | TM-0026 | |
| WBS Elements: | PE | _____ |
| | ROW | _____ |
| | CON | 49605.3.1 |
| OTHER FUNDING: | | |
| FEDERAL-AID NUMBER: | | 0501051 |
| CFDA #: | 20.205 | |
| Total Funds [NCDOT Participation] | $427,000 | |

THIS AGREEMENT is made and entered into on the last date executed below, by and between the North Carolina Department of Transportation, an agency of the State of North Carolina, hereinafter referred to as the "Department" and the Town of Apex, hereinafter referred to as the "Municipality".

**W I T N E S S E T H:**

WHEREAS, Fixing America's Surface Transportation (FAST) Act allows for the allocation of federal funds to be available for certain specified transportation activities; and,

WHEREAS, the Municipality has requested federal funding for Go Apex Route 1 Bus Stop Improvements, hereinafter referred to as the Project, in Wake County, North Carolina; and,

WHEREAS, subject to the availability of federal funds, the Municipality has been designated as a recipient to receive funds allocated to the Department by the Federal Highway Administration (FHWA) up to and not to exceed the maximum award amount of $427,000 for the Project; and,

WHEREAS, the Department has agreed to administer the disbursement of said funds on behalf of FHWA to the Municipality for the Project in accordance with the Project scope of work and in accordance with the provisions set out in this Agreement; and,

WHEREAS, the Department has programmed funding in the approved Transportation Improvement Program for the Project; and,

WHEREAS, the governing board of the Municipality has agreed to participate in certain costs and to assume certain responsibilities in the manner and to the extent as hereinafter set out; and,

WHEREAS, this Agreement is made under the authority granted to the Department by the North Carolina General Assembly including, but not limited to, the following applicable legislation: General Statutes of North Carolina (NCGS) Section 136-66.1, Section 136-71.6, Section 160A-296 and 297, Section 136-18, Section 136-41.3 and Section 20-169, to participate in the planning, construction and/or implementation of the Project approved by the Board of Transportation.

NOW, THEREFORE, this Agreement states the promises and undertakings of each party as herein provided, and the parties do hereby covenant and agree, each with the other, as follows:

## 1. GENERAL PROVISIONS

### FEDERAL FUNDING ACCOUNTABILITY AND TRANSPARENCY ACT

All parties to this Agreement, including contractors, subcontractors, and subsequent workforces, associated with any work under the terms of this Agreement shall provide reports as required by the Federal Funding Accountability and Transparency Act (FFATA) for this Project.

### AGREEMENT MODIFICATIONS

Any modification to scope, funding, responsibilities, or time frame will be agreed upon by all parties by means of a Supplemental Agreement.

### LOCAL PUBLIC AGENCY TO PERFORM ALL WORK

The Municipality shall be responsible for administering all work performed and for certifying to the Department that all terms set forth in this Agreement are met and adhered to by the Municipality and/or its contractors and agents. The Department will provide technical oversight to guide the Municipality. The Department must approve any assignment or transfer of the responsibilities of the Municipality set forth in this Agreement to other parties or entities.

### PERSON IN RESPONSIBLE CHARGE

The Municipality shall designate a person or persons to be in responsible charge of the Project, in accordance with Title 23 of the Code of Federal Regulations, Part 635.105. The person, or persons, shall be expected to:

- Administer governmental project activities, including those dealing with cost, time, adherence to contract requirements, construction quality and scope of Federal-aid projects;

- Maintain knowledge of day to day project operations and safety issues;
- Make or participate in decisions about changed conditions or scope changes that require change orders or supplemental agreements;
- Visit and review the project in accordance with the project scope and scale;
- Review financial processes, transactions and documentation to reduce the likelihood of fraud, waste, and abuse;
- Direct project staff, agency or consultant, to carry out project administration and contract oversight, including proper documentation; and
- Be aware of the qualifications, assignments and on-the-job performance of the agency and consultant staff at all stages of the project.

The person in responsible charge must be a full-time employee of the Municipality, but the duties may be split among several employees, if necessary.

**COMPLIANCE WITH STATE/FEDERAL POLICY**

The Municipality, and/or its agent, including all contractors, subcontractors, or sub-recipients shall comply with all applicable Federal and State policies and procedures, stated both in this Agreement and in the Department's guidelines and procedures, including the *Local Programs Management Handbook*.

**FAILURE TO COMPLY - CONSEQUENCES**

Failure on the part of the Municipality to comply with any of the provisions of this Agreement will be grounds for the Department to terminate participation in the costs of the Project and, if applicable, seek repayment of any reimbursed funds.

## 2. SCOPE OF PROJECT

The Project consists of construction of improvements at 41 bus stops to serve a local bus circulator route. Improvements include providing pedestrian connections and amenities such as benches, trash receptacles, bike parking, shelter, route information and lighting.

The Department's funding participation in the Project shall be restricted to the following eligible items:

- Construction

as further set forth in this Agreement.

## 3. FUNDING

**PROGRAMMING AND AUTHORIZATION OF FEDERAL FUNDS**

The funding currently programmed for the project in the State Transportation Improvement Program (STIP) is STBG-DA. The funding source may be modified with the coordination and approval of the respective Metropolitan Planning Organization (MPO) and/or the Department prior to authorization of funds. The Department will authorize and reimburse federal funding based on the type of federal funding that is programmed in the STIP at the time of the authorization request. The Department will notify the Municipality of the type of federal funds authorized by issuing a Technical Amendment – Funds Authorization letter. A modification in the source of funds will have no effect on project responsibilities outlined in this agreement.

**REIMBURSEMENT FOR ELIGIBLE ACTIVITIES**

Subject to compliance by the Municipality with the provisions set forth in this Agreement and the availability of federal funds, the Department shall reimburse seventy percent (70%) of eligible expenses incurred by the Municipality up to a maximum amount of Four Hundred Twenty-Seven Thousand Dollars ($427,000), as detailed below. The Municipality shall provide the non-federal match, as detailed in the FUNDING TABLE below, and all costs that exceed the total estimated cost.

**FUNDING TABLE**

| Fund Source | Federal Funds Amount | Reimbursement Rate | Non-Federal Match $ | Non-Federal Match Rate |
|---|---|---|---|---|
| STBG-DA | $427,000 | 70 % | $183,000 | 30 % |
| **Total Estimated Cost** | | **$610,000** | | |

**WORK PERFORMED BY NCDOT**

All work performed by the Department on this Project, including, but not limited to, reviews, inspections, and Project oversight, during any phase of the delivery of the Project, shall reduce the funding available to the Municipality under this Agreement. The Department will set aside ten percent (10%) of the total estimated cost, or ($61,000), to use towards the costs related to review and oversight of this Project, including, but not limited to review and approval of plans, environmental documents, contract proposals, engineering estimates, construction engineering

and inspection oversight, and other items as needed to ensure the Municipality's appropriate compliance with state and federal regulations.

In the event that the Department does not utilize all the set-aside funding, then those remaining funds will be available for reimbursement to the Municipality at the above reimbursement rate. For all costs of work performed on the Project, whether incurred by the Municipality or by the Department, the Municipality shall provide the non-federal match. The Department will bill the Municipality for the non-federal match of any costs that the Department incurs on the Project and for any costs that exceed the Total Estimated Cost.

## 4. PERIOD OF PERFORMANCE

The Municipality has three (3) years to complete all work outlined in the Agreement from the date of authorization of Federal Construction funds. Completion for this Agreement is defined as completion of all construction activities or implementation activities, acceptance of the project, and submission of a final reimbursement package to the Department.

If additional time is needed to complete the Project, then a supplemental agreement must be executed. The Department and/or FHWA reserves the right to revoke the funds awarded if the Municipality is unable to meet milestone dates included herein.

## 5. PRELIMINARY ENGINEERING AUTHORIZATION

If Preliminary Engineering is an eligible expense, then upon receipt of an executed agreement, the Department will authorize Preliminary Engineering funds and shall notify the Municipality, in writing, once funds have been authorized and can be expended. The Municipality shall not initiate any work, nor solicit for any professional services prior to receipt of written authorization from the Department to proceed. Any work performed, or contracts executed, prior to receipt of written authorization to proceed will be ineligible for reimbursement.

## 6. PROFESSIONAL AND ENGINEERING SERVICES

The Municipality shall comply with the policies and procedures of this provision if the Municipality is requesting reimbursement for the Preliminary Engineering contract or the Construction Contract Administration / Construction Engineering and Inspection contract.

**PROCUREMENT POLICY**

When procuring professional services, the Municipality must adhere to Title 2 Code of Federal Regulations Part 200; Title 23 of the Code of Federal Regulations, Part 172; Title 40 United States Code, Chapter 11, Section 1101-1104; NCGS 143-64, Parts 31 and 32; and the Department's *Policies and Procedures for Major Professional or Specialized Services Contracts*. Said policies and standards are incorporated in this Agreement by reference at www.fhwa.dot.gov/legsregs/legislat.html and www.ncleg.net/gascripts/Statutes/Statutes.asp.

- The Municipality shall ensure that a qualified firm is obtained through an equitable selection process, and that prescribed work is properly accomplished in a timely manner and at a just and reasonable cost.

- All Professional Services Firms shall be pre-qualified by the Department in the Work Codes advertised.

- A pre-negotiation audit will be conducted by the Department's External Audit Branch. The Municipality shall not execute a consultant contract until the Department's review has been completed.

**SMALL PROFESSIONAL AND ENGINEERING SERVICES FIRMS REQUIREMENTS**

Any contract entered into with another party to perform work associated with the requirements of this Agreement shall contain appropriate provisions regarding the utilization of Small Professional Services Firms (SPSF). This policy conforms with the SPSF Guidelines as approved by the North Carolina Board of Transportation.

- The Municipality shall not advertise nor enter into a contract for services performed as part of this Agreement, unless the Department provides written approval of the advertisement or the contents of the contract.

- If the Municipality fails to comply with these requirements, the Department will withhold funding until these requirements are met.

**WORK BY ENTITY**

If the Design, Planning, Contract Administration and/or Construction Engineering and Inspection required for this project will be undertaken by the Municipality, and the Municipality requests reimbursement, then the Municipality must submit a request and supporting documentation to the Department for review and approval, prior to any work being initiated by the Municipality.

## 7. PLANNING / ENVIRONMENTAL DOCUMENTATION

The Municipality shall prepare the environmental and/or planning document, including any environmental permits, needed to construct the Project, in accordance with the National Environmental Policy Act (NEPA) and all other appropriate environmental laws and regulations. All work shall be performed in accordance with Departmental procedures and guidelines. Said documentation shall be submitted to the Department for review and approval.

- The Municipality shall be responsible for preparing and filing with all proper agencies the appropriate planning documents, including notices and applications required to apply for those permits necessary for the construction of the desired improvements. Copies of approved permits should be forwarded to the Department.

- The Municipality shall advertise and conduct any required public hearings.

- If any permit issued requires that action be taken to mitigate impacts associated with the improvements, the Municipality shall design and implement a mitigation plan. The Department will determine if any mitigation costs are eligible for reimbursement. The Municipality shall bear all costs associated with penalties for violations and claims due to delays.

- The Municipality shall be responsible for designing an erosion control plan if required by the North Carolina Sedimentation Pollution Control Act of 1973, NCGS 113A, Article 4, incorporated in this Agreement by reference at www.ncleg.net/gascripts/Statues/Statutes.asp and obtaining those permits required thereby in order to construct the Project. During the construction of the improvements, the Municipality, and its contractors and agents, shall be solely responsible for compliance with the provisions of said Act and the plan adopted in compliance therewith.

## 8. DESIGN

### CONTENT OF PLAN PACKAGE

The Municipality, and/or its agent, shall prepare the Project's plans, specifications, and a professional estimate of costs (PS&E package), in accordance with the Department's guidelines and procedures, and applicable Federal and State standards. All work shall be submitted to the Department for review and approval. The plans shall be completed to show the design, site plans, landscaping, drainage, easements, and utility conflicts.

## 9. RIGHT OF WAY / UTILITY AUTHORIZATION

If the costs of right of way acquisition or utility relocation are an eligible expense, the Municipality shall submit a letter of request to the Department to authorize and set up right of way and/or utility funding. The acquisition for right of way, construction easements, and/or utility relocation may be undertaken only after the Municipality receives written authorization from the Department to proceed.

## 10. PROJECT LIMITS AND RIGHT OF WAY (ROW)

The Municipality shall comply with the policies and procedures of this provision regardless of whether the Municipality is requesting reimbursement for the Right of Way phase of the Project.

### SPONSOR PROVIDES ROW

The Municipality, at no liability whatsoever to the Department, shall be responsible for providing and/or acquiring any required ROW and/or easements for the Project.

### ROW GUIDANCE

The Municipality shall accomplish all ROW activities, including acquisition and relocation, in accordance with the following: Title 23 of the Code of Federal Regulations, Part 710, Subpart B and Title 49 of the Code of Federal Regulations, Part 24, [Uniform Act] incorporated by reference at www.fhwa.dot.gov/legsregs/directives/fapgtoc.htm; NCGS, Chapter 133, Article 2, Sections 133-5 through 133-18, Relocation Assistance, incorporated by reference at www.ncleg.net/gascripts/Statutes/Statutes.asp; and the North Carolina Department of Transportation Right of Way Manual.

### APPRAISAL

The Municipality shall submit the appraisal to the Department for review and approval in accordance with Departmental policies and procedures.

### CLEARANCE OF PROJECT LIMITS / ROW

The Municipality shall remove and dispose of all obstructions and encroachments of any kind or character (including hazardous and contaminated materials) from said ROW, with the exception that the Municipality shall secure an encroachment agreement for any utilities (which shall remain

or are) to be installed within the Department's ROW, or follow other applicable approval process, for utilities within the Municipality's ROW. The Municipality shall indemnify and save harmless the Department, Federal Highway Administration, and the State of North Carolina, from any and all damages and claims for damages that might arise on account of said right of way acquisition, drainage, and construction easements for the construction of said Project. The Municipality shall be solely responsible for any damages caused by the existence of said material now and at any time in the future and will save the Department harmless from any legal actions arising as a result of this contaminated and/or hazardous material and shall provide the Department with documentation proving the proper disposal of said material.

**RELOCATION ASSISTANCE**

The Municipality shall provide relocation assistance services and payments for families, businesses, and non-profit organizations being displaced by the Project in full accordance with the Federal relocation requirements of Title 49 Code of Federal Regulations, Part 24 [Uniform Act], as amended. Relocation assistance services and payments may be accomplished by contract with any other municipal corporation, or State or Federal agency, rendering such services upon approval by the Department and Federal Highway Administration.

## 11. UTILITIES

The Municipality, and/or its agent, at no liability to the Department, shall relocate, adjust, relay, change or repair all utilities in conflict with the Project, regardless of ownership. All utility work shall be performed in a manner satisfactory to and in conformance with State and Federal rules and regulations, prior to Municipality beginning construction of the project. This Agreement does not modify or supersede any existing Utility Encroachment Agreements that may be in place.

## 12. RIGHT OF WAY / UTILITY / RAILROAD CERTIFICATION

The Municipality, upon acquisition of all right of way/property necessary for the Project, relocation of utilities, and coordination with the railroad shall provide the Department all required documentation (deeds/leases/easement/plans/agreements) to secure certification. Certification is only issued after all ROW is in public ownership or property is publicly accessible by a legal document; utilities in conflict with the project are relocated, or a plan for their relocation during construction has been approved; and coordination with the railroad (if applicable) has occurred and been documented.

## 13. CONTRACT PROPOSAL AND ENGINEER'S ESTIMATE

### CONTRACT PROPOSAL

The Municipality shall develop a contract proposal that will be advertised for bids. The proposal shall comply with NCDOT Specifications and Standard Drawings as applicable to the Project. The proposal shall also contain provisions, as applicable, per Title 23 Code of Federal Regulations 633 and 635 to include, but not be limited to: FHWA 1273, Buy America, Davis-Bacon Wage Rates, Non-discrimination, DBE Assurances, Contractor Certification regarding suspension and debarment, and other provisions as required by the Department.

### ENGINEER'S ESTIMATE

The Municipality shall develop an itemized engineer's estimate to show items referenced to the NCDOT Standard Specifications, if applicable, along with units and unit price. The engineer's estimate will be used as the basis for comparing bids received.

## 14. CONSTRUCTION AUTHORIZATION

The Municipality shall submit the required environmental and/or planning document, ROW certification, final construction plans, total contract proposal, and an estimate of Project costs (final PS&E package) to the Department for review and approval.

- After approval of all documentation, the Department will request construction authorization from the Federal Highway Administration.
- The Municipality shall not advertise for bids prior to receiving written construction authorization from the Department.

## 15. CONTRACTOR PROCUREMENT

### ADVERTISE FOR BIDS

Upon receipt of written construction authorization from the Department, the Municipality may advertise the Project. The Municipality shall follow applicable Federal and/or State procedures pertaining to the advertisement of the Project, bid opening, and award of the contract, according to Title 2 of the Code of Federal Regulations, Part 200 and Title 23 of the Code of Federal Regulations, Part 633 and Part 635, incorporated by reference at

www.fhwa.dot.gov/legsregs/directives/fapgtoc.htm; and NCGS, Chapter 143, Article 8 (Public Contracts), incorporated by reference at www.ncleg.net/gascripts/Statutes/Statutes.asp.

**CONSTRUCTION CONTRACTOR REQUIREMENTS**

All Contractors submitting bids on the project shall be pre-qualified by the Department. All proposed subcontractors must be pre-qualified before construction work begins. Any subcontractors who are proposed to meet the Disadvantaged Business Enterprise goal must be certified by the Department.

**CONSTRUCTION SUBCONTRACTOR REQUIREMENTS**

Any contract entered into with another party to perform work associated with the requirements of this Agreement shall contain appropriate provisions regarding the utilization of Disadvantaged Business Enterprises (DBEs), or as required and defined in Title 49 of the Code of Federal Regulations, Part 26 and the North Carolina Administrative Code. These provisions are incorporated into this Agreement by reference https://connect.ncdot.gov/projects/Contracts/Pages/LGA-Projects.aspx.

- The Municipality shall not advertise nor enter into a contract for services performed as part of this Agreement, unless the Department provides written approval of the advertisement or the contents of the contract.
- If the Municipality fails to comply with these requirements, the Department will withhold funding until these requirements are met.

**AWARDING CONTRACT**

After the advertisement of the Project for construction bids, the Municipality shall request concurrence from the Department to award the construction contract by submitting a letter along with tabulated bids received depicting Disadvantaged Business Enterprises (DBE) goals, and a resolution recommending award of the Project to the lowest responsible, responsive bidder. The Department will review the submitted information and provide written approval to the Municipality prior to the contract being awarded by the Municipality.

**DELAY IN PROCUREMENT**

In the event the Project has not been let to contract within six (6) months after receiving construction authorization from the Department, the Municipality shall be responsible for

documenting to the Department justification for project delay and that the Project remains in compliance with the terms of this Agreement, the approved plans and specifications, and current codes.

**FORCE ACCOUNT**

Force account work is only allowed when there is a finding of cost effectiveness for the work to be performed by some method other than a contract awarded by a competitive bidding process, or there is an emergency. Written approval from the Department is required prior to the use of force account by the Municipality. Federal Highway Administration regulations governing Force Account are contained in Title 23 Code of Federal Regulations, Part 635.201, Subpart B; said policy being incorporated in this Agreement by reference www.fhwa.dot.gov/legsregs/directives/cfr23toc.htm. North Carolina General Statutes governing the use of Force Account, Chapter 143, Article 8 (Public Contracts) can be found at www.ncleg.net/gascripts/Statutes/Statutes.asp.

## 16. CONSTRUCTION

The Municipality, and/or its agents shall construct the Project in accordance with the plans and specifications of the Project as filed with, and approved by, the Department. During the construction of the Project, the procedures set out below shall be followed:

**CONSTRUCTION CONTRACT ADMINISTRATION**

The Municipality shall comply with the NCDOT Construction Manual as referenced at http://www.ncdot.org/doh/operations/dp%5Fchief%5Feng/constructionunit/formsmanuals/construction/, which outlines the procedures for records and reports that must be adhered to in order to obtain uniformity of contract administration and documentation. This includes, but is not limited to, inspection reports, material test reports, materials certification, documentation of quantities, project diaries, and pay records. The Municipality, and/or its agent, shall perform the construction engineering, sampling and testing required during construction of the Project, in accordance with Departmental procedures, including the Department's Guide for Process Control and Acceptance Sampling and Testing. The Municipality shall document that said compliance was accomplished in accordance with State and Federal procedures, guidelines, standards and specifications.

**RETAINAGE**

The Municipality shall not retain any portion of a payment due the contractor.

**SIGNAGE**

The Municipality shall provide and maintain adequate signage and other warning devices for the protection of the public in accordance with the approved traffic control plans for the Project and the current edition of the Manual on Uniform Traffic Control Devices (MUTCD) for Streets and Highways, or any subsequent revision of the same, published by the Federal Highway Administration and effective at the time of award of the contract.

**SITE LAYOUT**

The Municipality shall be responsible for ensuring that all site layout, construction work, and Project documentation are in compliance with applicable city, state and federal permits, guidelines, and regulations, including American Association of State Highway and Transportation Officials (AASHTO) guidelines and Americans with Disabilities Act (ADA) Standards for Accessible Design (www.usdoj.gov/crt/ada/stdspdf.htm).

**RIGHT TO INSPECT**

The Department and representatives of the Federal Highway Administration shall have the right to inspect, sample or test, and approve or reject, any portion of the work being performed by the Municipality or the Municipality's contractor to ensure compliance with the provisions of this Agreement. Prior to any payment by the Department, any deficiencies inconsistent with approved plans and specifications found during an inspection must be corrected.

**CONTRACTOR COMPLIANCE**

The Municipality will be responsible for ensuring that the contractor complies with all of the terms of the contract and any instructions issued by the Department or FHWA as a result of any review or inspection made by said representatives.

**CHANGE ORDERS**

If any changes in the Project plans are necessary, the Department must approve such changes prior to the work being performed.

**SHOP DRAWINGS**

Shop Drawings shall be submitted in accordance with the approved plans and specifications and may require review by the Designer.

## 17. CLOSE-OUT

Upon completion of the Project, the Municipality shall be responsible for the following:

### FINAL INSPECTION

The Municipality shall arrange for a final inspection by the Department. Any deficiencies determined during the final field inspection must be corrected prior to final payment being made by the Department to the Municipality. Additional inspection by other entities may be necessary in accordance with the Department's guidelines and procedures. The Municipality shall provide the Department with written evidence of approval of completed project prior to requesting final reimbursement.

### FINAL PROJECT CERTIFICATION

The Municipality will provide a certification to the Department that all work performed for this Project is in accordance with all applicable standards, guidelines, and regulations.

## 18. MAINTENANCE

The Municipality, at no expense or liability to the Department, shall assume all maintenance responsibilities for the Go Apex Route 1 Bus Stop Improvements, or as required by an executed encroachment agreement.

## 19. REIMBURSEMENT

### SCOPE OF REIMBURSEMENT

Activities eligible for funding reimbursement for this Project shall include:

- Construction

### REIMBURSEMENT GUIDANCE

The Municipality shall adhere to applicable administrative requirements of Title 2 Code of Federal Regulations, Part 200 (www.fhwa.dot.gov/legsregs/directives/fapgtoc.htm) "Uniform Administrative Requirements, Cost Principles and Audit Requirements for Federal Awards." Reimbursement to the Municipality shall be subject to the policies and procedures contained in

Title 23 Code of Federal Regulations, Part 140 and Part 172, which is being incorporated into this Agreement by reference at www.fhwa.dot.gov/legsregs/directives/fapgtoc.htm. Reimbursement to the Municipality shall be subject to the guidance contained in Title 2 Code of Federal Regulations, Part 170 (http://edocket.access.gpo.gov/2010/pdf/2010-22705.pdf) and Office of Management and Budget (OMB) "Federal Funding Accountability and Transparency Act" (FFATA). Said reimbursement shall also be subject to the Department being reimbursed by the Federal Highway Administration and subject to compliance by the Municipality with all applicable federal policy and procedures.

**REIMBURSEMENT LIMITS**

- **WORK PERFORMED BEFORE NOTIFICATION**

  Any costs incurred by the Municipality prior to written notification by the Department to proceed with the work shall not be eligible for reimbursement.

- **NO REIMBURSEMENT IN EXCESS OF APPROVED FUNDING**

  At no time shall the Department reimburse the Municipality costs that exceed the total funding per this Agreement and any Supplemental Agreements.

- **UNSUBSTANTIATED COSTS**

  The Municipality agrees that it shall bear all costs for which it is unable to substantiate actual costs or any costs that have been deemed unallowable by the Federal Highway Administration and/or the Department's Financial Management Division.

- **WORK PERFORMED BY NCDOT**

  All work performed by the Department on this Project, including, but not limited to, reviews, inspections, and Project oversight, shall reduce the maximum award amount of $427,000 available to the Municipality under this Agreement. The Department will bill the Municipality for the non-federal match of any costs that the Department incurs on the Project and for any costs that exceed the Total Estimated Cost.

- **CONSTRUCTION ADMINISTRATION**

  Reimbursement for construction contract administration will be made as governed by Departmental policy that limits reimbursement for construction contract administration to no more than fifteen (15%) percent of the actual construction contract of the Project.

These costs will also include any cost overruns and charges to the Project by the Department during the Construction Phase.

- **CONSTRUCTION CONTRACT UNIT PRICES**

  Reimbursement for construction contract work will be made on the basis of contract unit prices in the construction contract and any approved change orders.

- **RIGHT OF WAY**

  Reimbursement will be limited to the value as approved by the Department. Eligible costs for reimbursement of Right of Way Acquisition include: realty appraisals, surveys, closing costs, and the agreed upon just compensation for the property, at the reimbursement rate as shown in the FUNDING TABLE.

- **FORCE ACCOUNT**

  Invoices for force account work shall show a summary of labor, labor additives, equipment, materials and other qualifying costs in conformance with the standards for allowable costs set forth in 2 CFR 200 “Uniform Administrative Requirements, Cost Principles, and Audit Requirements for Federal Awards.” Reimbursement shall be based on actual eligible costs incurred with the exception of equipment owned by the Municipality or its Project partners. Reimbursement rates for equipment owned by the Municipality or its Project partners cannot exceed the Department’s rates in effect for the time period in which the work is performed.

**BILLING THE DEPARTMENT**

- **PROCEDURE**

  The Municipality may bill the Department for eligible Project costs in accordance with the Department’s guidelines and procedures. Proper supporting documentation shall accompany each invoice as may be required by the Department. By submittal of each invoice, the Municipality certifies that it has adhered to all applicable state and federal laws and regulations as set forth in this Agreement.

  Along with each invoice, the Municipality is responsible for submitting the FFATA Subrecipient Information Form, which is available at https://connect.ncdot.gov/municipalities/Funding/Pages/default.aspx.

- **INTERNAL APPROVALS**

Reimbursement to the Municipality shall be made upon approval of the invoice by the Department's Financial Management Division.

- **TIMELY SUBMITTAL OF INVOICES**

  The Municipality may invoice the Department monthly for work accomplished, but no less than once every six (6) months to keep the Project funds active and available. If the Municipality is unable to invoice the Department, then they must provide an explanation. Failure to submit invoices or explanation may result in de-obligation of funds.

- **FINAL INVOICE**

  All invoices associated with the Project must be submitted within six (6) months of the completion of construction and acceptance of the Project to be eligible for reimbursement by the Department. Any invoices submitted after this time will not be eligible for reimbursement.

## 20. REPORTING REQUIREMENTS AND RECORDS RETENTION

### PROJECT EVALUATION REPORTS

The Municipality is responsible for submitting quarterly Project evaluation reports, in accordance with the Department's guidelines and procedures, that detail the progress achieved to date for the Project.

### PROJECT RECORDS

The Municipality and its agents shall maintain all books, documents, papers, accounting records, Project records and such other evidence as may be appropriate to substantiate costs incurred under this Agreement. Further, the Municipality shall make such materials available at its office and shall require its agent to make such materials available at its office at all reasonable times during the contract period, and for five (5) years from the date of payment of the final voucher by the Federal Highway Administration, for inspection and audit by the Department's Financial Management Section, the Federal Highway Administration, or any authorized representatives of the Federal Government.

## 21. OTHER PROVISIONS

### REFERENCES

It will be the responsibility of the Municipality to follow the current and/or most recent edition of references, websites, specifications, standards, guidelines, recommendations, regulations and/or general statutes, as stated in this Agreement.

### INDEMNIFICATION OF DEPARTMENT

The Municipality agrees to indemnify and hold harmless the Department, FHWA and the State of North Carolina, to the extent allowed by law, for any and all claim for payment, damages and/or liabilities of any nature, asserted against the Department in connection with this Project. The Department shall not be responsible for any damages or claims, which may be initiated by third parties.

### DEBARMENT POLICY

It is the policy of the Department not to enter into any agreement with parties that have been debarred by any government agency (Federal or State). By execution of this agreement, the Municipality certifies that neither it nor its agents or contractors are presently debarred, suspended, proposed for debarment, declared ineligible or voluntarily excluded from participation in this transaction by any Federal or State Agency or Department and that it will not enter into agreements with any entity that is debarred, suspended, proposed for debarment, declared ineligible or voluntarily excluded from participation in this transaction.

### TITLE VI - CIVIL RIGHTS ACT OF 1964

The Municipality shall comply with Title VI of the Civil Rights Act of 1964, (Title 49 CFR, Subtitle A, Part 21). Title VI prohibits discrimination on the basis of race, color, national origin, disability, gender, and age in all programs or activities of any recipient of Federal assistance.

### OTHER AGREEMENTS

The Municipality is solely responsible for all agreements, contracts, and work orders entered into or issued by the Municipality for this Project. The Department is not responsible for any expenses or obligations incurred for the Project except those specifically eligible for the funds and obligations as approved by the Department under the terms of this Agreement.

**AVAILABILITY OF FUNDS**

All terms and conditions of this Agreement are dependent upon, and, subject to the allocation of funds for the purpose set forth in the Agreement and the Agreement shall automatically terminate if funds cease to be available.

**IMPROPER USE OF FUNDS**

Where either the Department or the FHWA determines that the funds paid to the Municipality for this Project are not used in accordance with the terms of this Agreement, the Department will bill the Municipality.

**TERMINATION OF PROJECT**

If the Municipality decides to terminate the Project without the concurrence of the Department, the Municipality shall reimburse the Department one hundred percent (100%) of all costs expended by the Department and associated with the Project.

**AUDITS**

In accordance with 2 CFR 200 “Uniform Administrative Requirements, Cost Principles, and Audit Requirements for Federal Awards,” Subpart F – Audit Requirements, and the Federal Single Audit Act Amendments of 1996, the Municipality shall arrange for an annual independent financial and compliance audit of its fiscal operations. The Municipality shall furnish the Department with a copy of the annual independent audit report within thirty (30) days of completion of the report, but not later than nine (9) months after the Municipality’s fiscal year ends.

**REIMBURSEMENT BY MUNICIPALITY**

For all monies due the Department as referenced in this Agreement, reimbursement shall be made by the Municipality to the Department within sixty (60) days of receiving an invoice. A late payment penalty and interest shall be charged on any unpaid balance due in accordance with NCGS 147-86.23.

**USE OF POWELL BILL FUNDS**

If the other party to this agreement is a Municipality and fails for any reason to reimburse the Department in accordance with the provisions for payment hereinabove provided, NCGS 136-41.3 authorizes the Department to withhold so much of the Municipality’s share of funds allocated

to Municipality by NCGS 136-41.1, until such time as the Department has received payment in full.

**ENTIRE AGREEMENT**

This Agreement contains the entire agreement between the parties and there are no understandings or agreements, verbal or otherwise, regarding this Agreement except as expressly set forth herein.

**AUTHORIZATION TO EXECUTE**

The parties hereby acknowledge that the individual executing the Agreement on their behalf is authorized to execute this Agreement on their behalf and to bind the respective entities to the terms contained herein and that he has read this Agreement, conferred with his attorney, and fully understands its contents.

**FACSIMILE SIGNATURES**

A copy or facsimile copy of the signature of any party shall be deemed an original with each fully executed copy of the Agreement as binding as an original, and the parties agree that this Agreement can be executed in counterparts, as duplicate originals, with facsimile signatures sufficient to evidence an agreement to be bound by the terms of the Agreement.

**GIFT BAN**

By Executive Order 24, issued by Governor Perdue, and NCGS 133-32, it is unlawful for any vendor or contractor (i.e. architect, bidder, contractor, construction manager, design professional, engineer, landlord, offeror, seller, subcontractor, supplier, or vendor), to make gifts or to give favors to any State employee of the Governor's Cabinet Agencies (i.e. Administration, Commerce, Environmental Quality, Health and Human Services, Information Technology, Military and Veterans Affairs, Natural and Cultural Resources, Public Safety, Revenue, Transportation, and the Office of the Governor).

## 22. SUNSET PROVISION

All terms and conditions of this Agreement are dependent upon, and subject to, the allocation of funds for the purpose set forth in the Agreement and the Agreement shall automatically terminate if funds cease to be available.

IT IS UNDERSTOOD AND AGREED that the approval of the Project by the Department is subject to the conditions of this Agreement, and that no expenditures of funds on the part of the Department will be made until the terms of this Agreement have been complied with on the part of the Municipality.

IN WITNESS WHEREOF, this Agreement has been executed, in duplicate, the day and year heretofore set out, on the part of the Department and the Municipality by authority duly given.

L.S. ATTEST: TOWN OF APEX

BY: _____ BY: _____

TITLE: _____ TITLE: _____

DATE: _____

NCGS 133-32 and Executive Order 24 prohibit the offer to, or acceptance by, any State Employee of any gift from anyone with a contract with the State, or from any person seeking to do business with the State. By execution of any response in this procurement, you attest, for your entire organization and its employees or agents, that you are not aware that any such gift has been offered, accepted, or promised by any employees of your organization.

This Agreement has been pre-audited in the manner required by the Local Government Budget and Fiscal Control Act.

(SEAL)

_____
(FINANCE OFFICER)

Federal Tax Identification Number

_____

Town of Apex

Remittance Address:

_____

_____

DEPARTMENT OF TRANSPORTATION

BY: _____
(CHIEF ENGINEER)

DATE: _____

APPROVED BY BOARD OF TRANSPORTATION ITEM O: _____(Date)

# | Agenda Item | cover sheet

for consideration by the Apex Town Council

Item Type: CONSENT AGENDA

Meeting Date: March 23, 2021

## Item Details

Presenter(s): Adam Stephenson, Engineering Supervisor

Department(s): Public Works & Transportation; Water Resources

Requested Motion

Motion to approve revisions to the Town Standard Specifications and Details.

Approval Recommended?

Yes

Item Details

Proposed revisions to the Town Standard Specifications and Details have been drafted to include a new Section 450 Utility Trenches, along with revisions to Section 600 Water Distribution System, Section 700 Wastewater Collection Systems, and Section 800 Wastewater Pumping Stations and Force Mains. These proposed revisions were spearheaded by the Water Resources (Utilities Engineering) Department and included input from Water Resources Operations and Infrastructure Inspections staff.

Following approval of these revisions, the files will be updated on the Town website.

Attachments

- Summary of Revisions
- Standard Specifications
- Standard Details

TOWN OF APEX
STANDARD SPECIFICATIONS & STANDARD DETAILS

SUMMARY OF REVISIONS
March 23, 2021

## Standard Specifications

Section 450 – Utility Trenches (new section) – List of changes attached
Section 600 – Water Distribution Systems – List of changes attached
Section 700 – Wastewater Collection Systems – List of changes attached
Section 800 – Wastewater Pumping Systems and Force Mains – List of changes attached

## Standard Details

Revised Details*:

Section 600 – Water Distribution Systems

| | | |
|---|---|---|
| 1. | 600.01 1 of 2 | 3/4" & 1" Water Service & Meter Box |
| 2. | 600.01 2 of 2 | 3/4" & 1" Water Service & Meter Box |
| 3. | 600.02 | 1-1/2" & 2" Meter Installation & Vault |
| 4. | 600.03 1 of 2 | 3" & Larger Meter Installation & Vault |
| 5. | 600.04 | Blow-Off Assembly |
| 6. | 600.05 | Hydrant Installation |
| 7. | 600.06 | Hydrant Location |
| 8. | 600.07 | Yard Hydrant (non-freeze) |
| 9. | 600.08 | Valve Box Installation |
| 10. | 600.12 1 of 2 | Air Release Manhole for Water Mains |
| 11. | 600.13 | Reaction Blocking |
| 12. | 600.15 | Valve Box Marker for Unpaved Areas |
| 13. | 600.16 | Post Indicator Valve |
| 14. | 600.17 | Butterfly Valve with 5’ Manhole Encasement |

Section 700 – Wastewater Collection Systems

| | | |
|---|---|---|
| 1. | 700.03 | Sanitary Sewer Service Connections |
| 2. | 700.04 1 of 3 | Precast Manhole Traffic Rated |
| 3. | 700.04 2 of 3 | Precast Manhole (Outfalls) |
| 4. | 700.04 3 of 3 | Precast Manhole |
| 5. | 700.05 1 of 2 | Manhole Ring & Cover (Type 1 - Paved Areas, H-20 Rated) |
| 6. | 700.05 2 of 2 | Manhole Ring & Rotating Cover for Watertight Manholes (Type 2 - Non-Traffic Only) |
| 7. | 700.07 | Drop Manhole |
| 8. | 700.10 | 4" Sanitary Sewer Tap & Service for Sewer Mains Over 13’ Deep |
| 9. | 700.12 | Doghouse Manhole Installation Over Existing Sewer Main |
| 10. | 700.13 | Manhole Vent |
| 11. | 700.14 | Cleanout Cover for Vehicle Traffic Areas |

*All details modified to be consistent with changes in Standard Specifications.

New Details:

Section 450 – Utility Trenches

| | | |
|---|---|---|
| 1. | 450.01 | Water Main Pipe Backfilling |
| 2. | 450.02 | Sanitary Sewer Pipe Bedding & Backfilling |
| 3. | 450.03 | Concrete Repair |
| 4. | 450.04 | Trench & Pavement Repair Section for Asphalt |
| 5. | 450.05 | Trench & Pavement Repair Section for Concrete |
| 6. | 450.06 | Bore and Jack |
| 7. | 450.07 | HDD Transition Fitting |
| 8. | 450.08 | Vertical Bend |
| 9. | 450.09 | Concrete Cradle |
| 10. | 450.10 | Anti-Seep Collar |
| 11. | 450.11 | Open Cut Ditch |
| 12. | 450.12 1 of 2 | Vehicle Crossing at Stream |
| 13. | 450.12 2 of 2 | Vehicle Crossing at Stream Notes |
| 14. | 450.13 | Tracer Wire |

Section 600 – Water Distribution Systems

| | | |
|---|---|---|
| 1. | 600.12 2 of 2 | Air Release Manhole for Water Mains offset from main |
| 2. | 600.18 | Sampling Station |
| 3. | 600.21 | Reverse Tap |
| 4. | 600.22 | Tapping Sleeve and valve |
| 5. | 600.23 | Standard Stubout/Capping Detail |

Section 700 – Wastewater Collection Systems

| | | |
|---|---|---|
| 1. | 700.01 | Standard Typical Sewer Point Repair |
| 2. | 700.09 | Manhole Step |
| 3. | 700.16 | Sanitary Sewer Protection During Construction |
| 4. | 700.18 | Solid Steel Riser Assembly |
| 5. | 700.19 1 of 2 | Oil and Grease Structures |
| 6. | 700.19 2 of 2 | Dimensions: Grease Interceptors Oil-Water-Sand Separators |
| 7. | 700.20 | Typical Easement Fence Gate |

Section 800 – Wastewater Pumping Stations and Force Mains

| | | |
|---|---|---|
| 1. | 800.01 | Force Main Discharge Manhole |
| 2. | 800.02 | Plug Valve Box Installation |
| 3. | 800.03 1 of 2 | Sewage Grinder Unit (Wetwell Installation) |
| 4. | 800.03 2 of 2 | Sewage Grinder Unit (Wetwell Installation) |
| 5. | 800.04 1 of 2 | Standard Mag Meter Installation |
| 6. | 800.04 2 of 2 | Standard Mag Meter Installation |
| 7. | 800.05 | Wetwell Hatch |
| 8. | 800.06 | Pump Station Access Road |
| 9. | 800.07 | Typical Chain Link Fence |
| 10. | 800.08 | Typical Security Double Gate |

11. 800.09 Typical Pump Station Layout < 500 GPM
12. 800.10 Typical Pump Station Layout > 500 GPM
13. 800.11 Air Release Manhole for Sanitary Sewer Force Mains

# Section 450 Summary List of Changes

**451 Excavation and Preparation**

**A. Preparation**

1. General Requirements
   - New Standard: 1(a) thru (e)

**B. Trenching**

1. Trench Dimensions

   b) New Standard: Open trenches shall not exceed 100-ft**.**
   Old Standard Removed: Section 700, page 13 of 24

   c) New Standard

   d) New Standard

2. Trench Protection:

   - New Standard: a) thru c).

Old Standard removed: 705 (a)

**452 Pipe Laying and Backfilling**

**Moved from Section 700 to 450**

Old Standard Removed: 706 c) Class V soil

**A. General Requirements**

1. Embedment Material
   - New Standard: b) thru f)
2. Pipe Laying
   - New Standard: a) thru g) and type 1, type 4, and type 5.
3. DIP Specific Installation Requirements
   - New Standard: a) and b).
4. PVC Specific Installation Requirements
   - New Standard: a) thru g).
5. Backfill
   - New Standard: a) thru i).
6. Pipe Identification and Marking
   - New Standard: a) Marking Tape; 1) thru 3).
   - New Standard: b) Tracer Wire; 1) thru 11).
   - New Standard: c) Marker Tape and Tracer Wire Testing; 1).

**453 Pavement Repairs**

**A. Open trench Pavement Repairs**

1. General Requirements

- New Standard: a) thru e).

**454 Trenchless Pipe Installation**

**A. Design**

1. General Requirements

- New Standard: a) thru f).

**B. Materials**

1. Encasement Pipe
   - New Standard: a) thru e) and Table
2. Casing Pipe Spacers and End Closures
   - New Standard: a) thru g).
3. Carrier Pipe
   - New Standard: a)
4. Polyethylene (PE) Pressure Pipe
   - New Standard: a) thru e).
5. Fusible Polyvinylchloride Pipe
   - New Standard: a) thru h).

**C. Installation**

1. General Requirements
   - New Standard: a) thru d).
2. Settlement Surveying
   - New Standard: a) thru d).
3. Horizontal Directional Drilling
   a) General
      - New Standard: 1 thru 7
   b) Fusible Polyvinylchloride (FPVC) Pipe
      1. General
         - New Standard: a) 1 thru 5.

**455 External Corrosion Protection**

**1. General Requirements**

- New Standard: a) thru g).

**456 Rock Excavation**

**Moved from Section 700 to 450. Section includes Blasting specifications.**

1. General Requirements
   - New Standard: a) thru c).

## Section 600 Summary List of Changes

**601 Water Distribution Pipe**

**A. Design**

1. Location
    - New Standard: Language
2. Sizing
    - New Standard: Language
3. Restraint
    - New Standard: Language a) thru f) and Restraint Table
4. Depth of Installation
    - New Standard: Language
5. Relation to Sanitary and Storm water
    - New Standard: Language a) thru c)

**B. Materials**

General

- New Standard: Table

1. Ductile Iron Pipe
    - New Standard: Language a) thru c).
2. Ductile Iron Fittings
    - New Standard: Language
3. Ductile Iron Fittings
    - New Standard: Language

**C. Installation**

- New Standard: Language 1 thru 8

**602 Fire Protection**

**A. Fire Hydrants**

1. Sizing of Mains
    - New Standard: Language
2. Location
    - Standard Revised: Language a) thru d).
    - New Standard: Language e) thru h).
3. Specifications
    - New Standard: Language
4. Installation
    - New Standard: Language

5. Depth of Bury
    - New Standard: Language
6. Hydrant Relocations
    - New Standard: Language

**B. Automatic Fire Sprinkler Systems**

1. General
    - New Standard: Language
2. Design
    - New Standard: Language
3. Hydraulic Design
    - New Standard: Language
4. Backflow Prevention
    - New Standard: Language
5. Post Indicator Valve (PIV)
    - New Standard: Language
6. Fire Department Connection
    - New Standard: Language
7. Dedicated Riser Room
    - New Standard: Language
8. Alarm Communication
    - New Standard: Language
9. Access
    - New Standard: Language
10. Identification
    - New Standard: Language
11. Fire Alarm Panel
    - New Standard: Language

**C. Fire Protection During Construction**

- New Standard: Language

**603 Trenchless Pipe Installation**

**A. Valves**

1. General
    - New Standard: Language b) thru d).
2. Combination Air Valves
    - New Standard: Language a) thru d).
3. Gate Valves, Less than 4” for Blow off Assemblies
    - New Standard: Language
4. Gate Valves, 6-inches to 12 inches

- New Standard: Language

5. Gate Valves, 14-inches through 48-inches
   - New Standard: Language
6. Butterfly Valves
   - New Standard: Language
7. Insertion Valves
   - New Standard: Language
8. Valve Boxes
   - Standard Revised: Language
9. Actuators
   - New Standard: Language

**B. Appurtenances**

1. Blowoffs
   - Standard Revised: Language
2. Reaction Blocking
   - Standard Revised: Language
3. Rodding
   - New Standard: Language and New Table
4. Wedge Action Retainer Glands
   - New Standard: Language
5. Sample Stations
   - New Standard: Language
6. Gaskets for Contaminated Installations
   - New Standard: Language a) thru c).
7. Polyethylene Wrapping
   - New Standard: Language
8. Marker Posts
   - New Standard: Language

**604 Watermain Taps and Services**

**A. Design**

- New Standard: Language 1 thru 18.

**B. Materials**

1. Full Body Tapping Sleeves
   - Standard Revised: Language
2. Stainless Steel Tapping Sleeves, 6-inch through 12-inch Main Lines
   - New Standard: Language and Table.
3. Stainless Steel Tapping Sleeves, 14-inch through 24-inch Main Lines
   - New Standard: Language
4. Tapping Saddles, 14-inch through 24-inch Main Lines

- New Standard: Language and Table.

5. Corporation Stops
   - New Standard: Language a) and b).
6. Service Saddles
   - Standard Revised: Language
7. Copper Service Tubing
   - Standard Revised: Language
8. Meter Boxes for ¾ and 1-inch Services
   - Standard Revised: Language
9. 1 ½ and 2-inch Water Services
   - New Standard: Language
10. Water Services Greater than 2-inches
    - New Standard: Language
11. Meter Vaults
    - New Standard: Language

**605 Irrigation Systems**

- Standard Revised: "Private" removed. Language 1 thru 5.

**606 Testing and Inspections**

**A. General**

- New Standard: Language 1 thru 4.

**B. Testing**

1. Pigging of Water Mains
   - Standard Revised: Language
2. Hydrostatic Testing
   - Standard Revised: Language a) thru d).
3. Disinfection
   - Standard Revised: Language a) 1 thru 6 and Table.
4. Flushing
   - New Standard: Language a) thru d).
5. Bacteriological and Turbidity Sampling
   - Standard Revised: Language a) thru l).
6. Tracer Wire and Marker Tape Testing
   - New Standard: Language

**607 Testing and Inspections**

1. Joint Leaks
   - New Standard: Language
2. Line Breaks and Punctures

- New Standard: Language

3. Line Splits or Blow Outs
   - New Standard: Language
4. Asbestos Cement Pipe to PVC or Ductile Iron Pipe Transitions
   - New Standard: Language
5. All Water Main Point Repairs
   - New Standard: Language
6. Water Service Line Repairs
   - New Standard: Language a) thru c).
7. Abandonment of Existing Water Mains
   - New Standard: Language a) and b).

## Section 700 Summary List of Changes

**701 Gravity Sewer**

**A. Design**

1. Main Location
    - New Standard and Revised: Language a) thru w).
2. Main Size, Slope, and Design Criteria

    New Standard: Language a) thru n) and Table.

**B. Materials**

- New Standard and Revised: Language and Table.

1. Ductile Iron Pipe
    - New Standard and Revised: Language and Tables.
2. Solid Wall PVC Pipe
    - New Standard and Revised: Language

**C. Sewer Main Installation**

1. General Requirements
    - New Standard: Language a) thru h).

**702 Pump Station Site and Structures**

**A. Design**

1. Manhole Location, Siting and Design
    - New Standard and Revised: Language a) thru m).
2. Manhole Sizing

    New Standard and Revised: Language a) and Table.

**B. Materials**

1. Concrete Manholes
    - New Standard and Revised: Language a) thru g).
2. Manhole Frame and Cover Materials

    New Standard and Revised: Language a) thru e).

**C. Installation**

1. General Requirements
    - Standard Revised: Language a) thru h).
2. Manholes Subject to Inundation
    - Standard Revised: Language a) thru c).
3. Manholes Located on Large Collection Mains

- New Standard: Language

4. Force Main Discharge Manholes
    - Standard Revised: Language
5. Epoxy Coating
    - New Standard: Language a) and b).
6. Labeling
    - New Standard: Language a)

**703 Service Connections**

**A. Design**

1. General Requirements
    - New Standard and Revised: Language a) thru j).

**B. Materials**

1. Pipe Materials
    - Standard Revised: Language a) thru c).
2. Sewer Service Fittings, New Construction
    - New Standard and Revised: Language a) thru d).
3. Service Saddle Connections, Existing Sewer Mains
    - New Standard and Revised: Language a) and b).

**C. Installation**

1. General Requirements
    - New Standard and Revised: Language a) thru g).

**704 Testing and Inspections**

**A**. General
    - Standard Revised: Language

**B. Sewer Main and Service Connection Testing**

1. Visual Testing and Observation
    - New Standard: Language a) and b).
2. Air Testing
    - Standard Revised: Language a) thru c) and Table.

3. Infiltration Tests
    - Standard Revised: Language a) thru c).
4. Deflection Testing for Flexible Pipe
    - Standard revised: Language a) thru c) and Table.
5. Video Assessment and Cleaning
    - Standard Revised: Language a) and g).
6. Marker Tape Testing
    - New Standard: Language

**C. Manhole Testing**

1. Vacuum Testing
    - Standard Revised: Language a) thru d).
2. Holiday Testing of Lines Manholes
    - New Standard: Language

**705 Aerial Crossings**

**A. Design**
- New Standard: Language

**B. Pipe Materials**

1. Ductile Iron Pipe
    - New Standard: Language
2. PVC Pipe
    - New Standard: Language
3. Steel Pipe
    - New Standard: Language

**C. Installation**
- New Standard: Language

**706 Repairs, Modifications, and Abandonment**

**A. Sewer Main Repairs**

1. Vitrified Clay Pipe
    - New Standard: Language
2. PVC Pipe
    - New Standard: Language
3. ABS / PVC Truss Pipe
    - New Standard: Language
4. Asbestos Cement Pipe
    - New Standard: Language

**B. Installation**

1. Paragraph
    - New Standard: Language
2. Paragraph

- New Standard: Language

**C. Draining Sewer Mains**

- New Standard: Language

**D. Abandonment of Existing Sewer Mains**

- New Standard: Language 1 and 2

## Section 800 Summary List of Changes

**801 Pump Station General**

**A. Design Requirements**

- Standard Revised: Language 1 thru 9.

**B. Warranty**

- Standard Revised: Language

**C. Submittals**

1. Design Report

   - New Standard: Language a).

2. Project Review Submittals

   New Standard: Language a) and b).

3. Pre-Approved Equal Submittals

   New Standard: Language a) thru d).

4. Testing Results Submittals

   New Standard: Language a) thru c).

5. Operation and Maintenance Manuals (O&M)

   Standard Revised: Language a) thru c).

**802 Pump Station Site and Structures**

**A. General**

- New Standard: Language 1 thru 5.

**B. Site Work**

- New Standard: Language 1 thru 8.

**C. Structures**

1. General

   - Standard Revised: Language a) thru e).

2. Wet Well
   - Standard Revised: Language a) thru m).

3. Valve / Meter Vaults

   - New Standard: Language

4. Manholes

- Standard Revised: Language

5. Buildings

- New Standard: Language a) thru d).

**D. Piping and Valves**

- Standard Revised: Language 1) thru 11).

**E. Electrical - General**

- Standard Revised: Language 1) thru 9).

**803 Pump Station Equipment**

**A. Pumps**

1. General

- New Standard and Revised: Language a) thru f).

2. Submittals

- New Standard and Revised: Language a) and b).

3. Quality Assurance

- New Standard: Language a) 1 thru 6.

4. Materials

- New Standard and Revised: Language a) thru j).

5. Pumps

- New Standard and Revised: Language a) thru g).

6. Pump Motors

- New Standard and Revised: Language a) thru o).

7. Appurtenances

- New Standard: Language a) thru g).

8. Shop Painting

- New Standard: Language a) thru c).

**B. Pump Control Systems**

- Standard Revised: Language 1 thru 28.

**C. Alarm Dialer / Scada / Telemetry**

- Standard Revised: Language 1 and 2.

**D. Grinders**

1. General
    - New Standard and Revised: Language a) thru h).
2. Submittals
    - New Standard: Language
3. Quality Assurance
    - New Standard: Language a) thru d).

**E. Generators**

1. General
    - New Standard and Revised: Language a) thru i).
2. Submittals
    - New Standard: Language a).
3. Quality Control
    - New Standard: Language a).
4. Generator Equipment
    - New Standard and Revised: Language a) thru n).

**F. Automatic Transfer Switch**

1. Standard Revised: Language
2. General
    - New Standard and Revised: Language a) thru i).
3. Sequence of Operation
    - New Standard: Language a) thru i).
4. Construction and Performance
    - New Standard and Revised: Language a) thru l).

**804 Odor / Chemical Facilities**

- New Standard: Language 1 thru 3.

**805 Inspections, Testing, and Training**

**A. Inspections**

- New Standard: Language 1 and 2.

**B. Testing**

1. General
   - New Standard: Language a) thru l).
2. Pump Testing
   - New Standard: Language a) thru c).
3. Grinder Testing
   - New Standard: Language a) thru c).
4. Generator Testing
   - New Standard: Language a) thru c).
5. Automatic Transfer Switch Testing
   - New Standard and Revised: Language a) and b).
6. Control System Testing
   - New Standard: Language a).
7. Structure Testing
   - New Standard: Language a) thru d).

**C. Operator Training**

- New Standard and Revised: Language 1 thru 7.

**806 Force Main General**

- New Standard and Revised: Language 1 thru 4.

**807 Wastewater Force Mains**

**A. Design**

- New Standard and Revised: Language 1 and 14.

**B. Materials**

1. Pipe Materials
   - New Standard and Revised: Language a) thru g) and Tables.
2. Manhole Materials

   New Standard and Revised: Language a) thru e).

**C. Installation**

1. General

   New Standard: Language 1 and 2.

**D. Valves and Appurtenances**

1. Pipe Materials

- New Standard: Language 1 thru 10.

**808 Force Main Inspections and Testing**

**A. Inspections**

- New Standard: Language 1 and 2.

**B. Testing**

1. General
    - New Standard and Revised: Language a) thru c).
2. Force Main Testing
    - New Standard and Revised: Language a).

# SECTION 450
# UTILITY TRENCHES


**451 Excavation and Preparation**
- **A. Preparation**
- **B. Trenching**

**452 Pipe Laying and Backfilling**
- **A. General Requirements**

**453 Pavement Repairs**
- **A. Open Trench Pavement Repair**

**454 Trenchless Pipe Installation**
- **A. Design**
- **B. Materials**
- **C. Installation**

**455 External Corrosion Protection**

**456 Rock Excavation**

## 451 Excavation and Preparation

### A. Preparation

1. General Requirements

a) Trenching for pipelines (water, gravity sewer, and force main), shall be excavated to the required depth to permit the installation of the pipe (inclusive of pipes and structures) along the lines and grades shown on the construction drawings.

b) Prior to trenching for the construction of any utility mains or connections, the Contractor shall locate all existing utilities within the construction zone. This may include at a minimum contacting the North Carolina One Call Center at 811 or 1-800-632-4949. Where critical Town water and sewer utilities cannot be located by traditional means, specialized utility locating, such as vacuum excavation or ground penetrating radar (GPR) may be required to locate existing utilities before excavating.

c) In all cases where trenchless methods are planned to cross an existing utility corridor with water, sewer, force main, and/or other Town maintained pipelines, an SUE (subsurface utility exploration) services firm shall be contracted to verify the depths of existing utilities prior to boring.

d) The Contractor shall be responsible for implementing all required safety provisions for trenching in compliance with the Occupational Safety and Health Administration (OSHA) regulations and all other applicable safety requirements and procedures.

e) Refer to Section 500 for all Stormwater installations.

### B. Trenching

1. Trench Dimensions

a) The minimum trench width at the top of the pipe shall be at least 16 inches greater than the outside diameter of the pipe, the maximum shall be 24 inches greater than the outside diameter. Rock shall be removed to a depth of at least 6 inches below the bottom of the pipe and the trench backfilled with suitable material.

b) Open trenches shall not exceed 100-ft.

c) All trenches shall be confined to the limits of the right-of-way or utility easement. Trenches in paved areas shall not be sloped.

d) All trenches shall be properly backfilled at the end of each working day.

2. Trench Protection

a) Wet gravity sewer trenches shall be stabilized with a base layer of #57 stone. The bottom of the trench shall be shaped to provide uniform support along the entire length of the pipeline. Severely unstable trench bottoms requiring undercut excavation shall receive a foundation support system for the pipeline designed by a registered Geotechnical Engineer licensed in the State of NC.

b) A space shall be excavated at each bell to provide ample space to join the pipes with no misalignment.

c) The Contractor shall take all necessary measures to prevent water from entering the trench.

3. Dewatering

a) The ground adjacent to the excavation shall be graded to prevent surface water from entering the trench. The Contractor will, at his expense, remove by pumping or other means approved by the Town, any water accumulated in the trench and shall keep the trench dewatered until bedding and pipe laying are complete. When water is pumped from the trench, the discharge shall follow natural drainage channels. Proper erosion control measures shall be employed. Direct discharge into stream is not permissible.

b) In gravity sewer trenches where water is present or where dewatering is required, the trench bottom shall be undercut and stabilized with No. 57 or No. 67 stone, having a minimum depth of 8-inches.

## 452 Pipe Laying and Backfilling

### A. General Requirements

1. Embedment Material

a) Bedding and embedment material classifications shall be defined as follows:

1) CLASS I - Angular, (1/4 to 1-1/2 inch) graded stone, including a number of fill materials that have regional significance such

as coral, slag, cinders, crushed stone, crushed gravel, and crushed shells.

2) CLASS II - Coarse sands and gravels with maximum particle size of 1-1/2 inch, including variously graded sands and gravels containing small percentages of fines, generally granular and non-cohesive, either wet or dry. Soil types GW, GP, SW and SP are included in this class.

3) CLASS III - Fine sand and clayey gravels, including fine sands, sand-clay mixtures, and gravel-clay mixtures, Soil Types GM, GC, SM, and SC are included in this class.

4) CLASS IV - Silt, silty clays, and clays, including inorganic clays and silts of medium to high plasticity and liquid limits. Soil Types MH, ML, CH and CL are included in this class. These materials shall not be used for embedment.

b) Class I foundation material consisting of ¼-inch to 1½ -inch graded stone shall be required in addition to standard bedding and embedment for all sewer installations, regardless of pipe material, when the trench bottom is unstable due to water, rock, infiltration or soil type.

c) All bedding, embedment and backfill materials shall be compacted to a minimum of 95% Standard Proctor density regardless of material. In instances where compliance with compaction requirements is questionable as determined by the Town, testing shall be provided by the Contractor and a reputable licensed Geotechnical Engineer to verify compliance.

d) The minimum trench width shall be one pipe diameter plus 8 inches on each side of the pipe, with a maximum of 12 inches on each side of the pipe.

e) In any area where the pipe will be installed below existing or future ground water levels or where the trench could be subject to inundation, additional Class I material shall be used for bedding.

f) If hydraulic jack shoring is utilized for trench walls, it shall be restricted to the area just above the top of the pipe. This will ensure the embedment materials and pipe will not be disturbed when the shoring is removed.

2. Pipe Laying

a) Open ends of pipe shall be plugged when pipe laying is not in progress to prevent trench water, soil, and debris from entering.

b) All pipe shall be laid in accordance with the manufacturer's recommendations, all applicable Town Standards, Specifications and Details, and in accordance with construction drawings.

c) Pipe laying shall be accomplished in a manner and with the required resources to provide a properly aligned and sealed pipeline and joints.

d) Pipe deflection limits shall not be exceeded in accordance with manufacturer requirements.

e) All gravity mains shall be installed beginning with the downhill section at the lowest elevation, and advanced upgrade to the terminus of the main. All bell ends shall be oriented facing the uphill direction.

f) Laying conditions shall be defined as follows:

**Type 1:**
Flat Bottom Trench with Pipe Resting on Stable Undisturbed Earth. Unstable conditions such as wet trench bottoms, intermediate rock layering, partially weathered rock, and other unsuitable soil conditions shall require utilizing more stringent laying conditions. At a minimum, Type 4 laying condition shall be utilized with a minimum of 4-inches of bedding to overcome unstable conditions. For severe unstable soil conditions, undercut excavation and an engineer designed foundation plan shall be provided prior to pipeline installation.

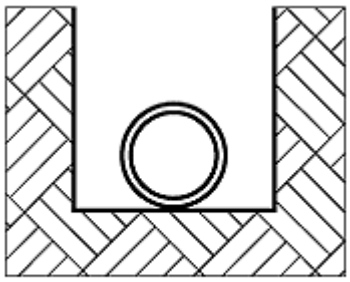

Type 1*

**Type 4:**
Pipe bedded in Class 1 material, No. 67 or No 57 crushed stone to a depth of 1/8 pipe diameter or a minimum of 6-inches. Embedment material, consisting of Class 1, Class 2 or Class 3 materials, shall be compacted greater than 95% Proctor to the top of the pipe. Careful attention must be allocated to compacting embedment material under the bottom edges of the pipe.

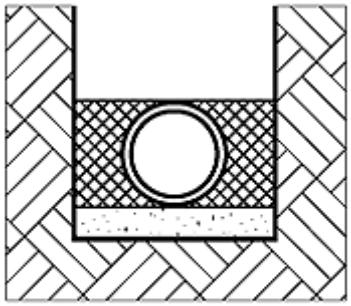

Type 4

**Type 5:**
Pipe bedded in Class 1 material, No. 67 or No. 57 crushed stone to the center of the pipe and extending a minimum of 6-inches under the pipe. Granular or select embedment, consisting of Class 1 or Class 2 materials, compacted to greater than 95% Proctor installed to the top of the pipe.

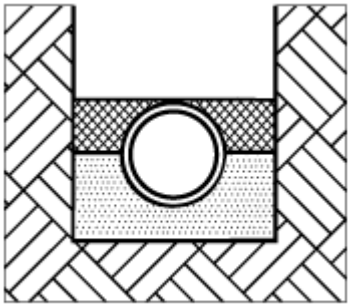

Type 5

g) For installations below the water table, a single layer of engineering fabric shall be installed between the pipe and trench floor/trench wall. The fabric shall fully encapsulate the waterline, bedding, and embedment material with a minimum of 12-inch overlap at the top of the embedment material.

3. DIP Specific Installation Requirements

a) Ductile iron pipe shall be installed in accordance with the requirements of AWWA C600 and the Ductile Iron Pipe Handbook published by the Ductile Iron Pipe Research Association. Materials at all times shall be handled with mechanical equipment or in such a manner to protect them from damage. At no time shall pipe and fittings be dropped or pushed into ditches.

b) Pipe shall be installed at laying conditions as specified herein and identified by the plan drawings. Laying conditions for ductile iron pipe shall be as described in AWWA C151 and the Ductile Iron Pipe Research Association.

4. PVC Specific Installation Requirements

The installation of PVC Pipe shall satisfy the requirements of the manufacturer, and/or the following, whichever is more stringent:

a) For PVC pipe, the pipe shall be produced with bell and spigot end construction. Joining shall be accomplished by rubber gasket in accordance with manufacturer's recommendation. Flexible watertight elastomeric seals in accordance with ASTM D3212-1 may also be used. Each pipe length shall be clearly marked with information including pipe size, profile number and class number.

b) Installation of PVC pipe shall follow the recommendations of ASTM D-2321 "Underground Installation of Thermoplastic Pipe for Sewers and other Gravity-Flow Applications". For PVC pipe installation, bedding and embedment material shall be Class I, typically No. 67 or No. 57 washed stone. Bedding and embedment materials for PVC gravity sewers other than No. 67 or No. 57 washed stone shall be approved by the Town of Apex prior to use.

c) Bedding for gravity sewer shall consist of minimum 4-inches of No. 67 or No. 57 stone installed under the pipe (Type 4). Embedment shall extend to the top of the pipe. Bedding and embedment shall be compacted to 95% standard proctor density. Careful attention shall be placed on compacting embedment under the haunches of the pipe to prevent any potential voids.

d) The bedding and embedment materials shall be in accordance with ASTM D-2321. The embedment materials shall be installed from trench wall to trench wall.

e) The maximum allowable deflection after installation shall BE LESS THAN 5% for PVC pipe.

f) All PVC pipe shall be stored properly to prevent UV damage prior to installation. Any PVC pipe with visible fading caused by UV radiation from sunlight shall be rejected.

g) All PVC pipe shall be free from nicks, scratches and gouges at the time of installation. Such defects can impact the strength of PVC pipe and all pipes with visible gouges shall be rejected.

5. Backfill

a) Backfill material shall be free from construction material, frozen material, organic material, or unstable material. Backfill with a high clay content or high shrink-swell potential that cannot meet compaction requirements shall be deemed unsuitable and replaced.

b) Backfill materials that have been allowed to become saturated or with moisture contents non-conducive to meeting compaction requirements shall be deemed unsuitable and replaced.

c) When original excavated materials have been deemed unsuitable, granular material must be imported to the site to backfill utility trenches and meet compaction requirements. The following materials shall be acceptable forms of granular backfill: aggregate base course, soil type base course, select backfill material, sand or screenings in accordance with NCDOT Specifications.

d) In all open utility trenches, backfill shall be compacted to 95% maximum dry density as measured by AASHTO method T99. The Contractor shall be responsible for verifying that compaction requirements have been met or exceeded by providing soils testing data from an approved Geotechnical Firm. The soil test results shall be certified by a licensed Geotechnical Engineer.

e) Backfill for utility trenches shall be placed in lifts of uncompacted soil in accordance with the standard detail and compacted with a mechanical tamp before placing additional layers.

f) No rocks, boulders, or stones shall be included in the backfill material for at least 2 feet above the top of the pipe. In traffic areas, the final backfill shall be placed and compacted in 6-inch layers. Backfill shall be of such density as to ensure no settlement of the trench.

g) A compaction test shall be performed every 1,000 feet for utility installations, with a minimum of one test per utility by a licensed Professional Engineer and shall be coordinated and submitted at the Contractor's expense. The location of tests shall be determined by the Town. The Town may request

additional testing. Additional tests that are deemed passing will be at the Town's expense, failed tests shall be paid for by the Contractor. Organic material shall not be permitted for backfill.

h) Should any water line trench exhibit settlement, the Contractor shall correct the deficiency to the complete satisfaction of the Town. Where a utility line is in or crosses existing State roads or other public roads, the backfill shall be compacted to at least 95% standard density as measured by AASHTO Method T-99, or in accordance with NCDOT specifications, whichever is more stringent.

i) For permitted open-cut utility installations and/or tie-ins, the Town may require that "flowable fill" be used for backfill material. If required, 1 foot of approved natural backfill material shall be compacted over the main per Apex Specifications, the remaining excavated trench shall be backfilled with "flowable fill". Within seven (7) days after the excavation has been filled, the open-cut area shall be repaired per the Standard Detail.

6. Pipe Identification and Marking

a) Marking Tape

1) Installation: Marking tape shall be installed continuously and longitudinally along all mains and services for new construction and for any repair or retrofit construction using open trench methods. For service connections, the marking tape shall extend from the main line to the meter or first cleanout off the main/manhole. Marking tape shall be installed directly above the center of the pipe and at least 18-inches deep from final grade to a maximum depth of 24-inches below final grade.

2) Specifications: The marking tape shall be made of polyethylene (or approved equivalent) material, 6-inches wide and a minimum of 6 millimeters thick. The marking tape shall have detectable markers embedded in the tape and spaced adequately to provide continuous detection along the tape from above the buried pipe at final grade. The tape color shall be in accordance with the utility being installed:

a. Blue for water and shall be marked with words "CAUTION WATER LINE BURIED BELOW" (or an approved equivalent wording).

b. Green for gravity sewer and force mains and shall be marked with words "CAUTION SEWER LINE BURIED BELOW" (or an approved equivalent wording).

3) The wording shall be repetitive along the full length of the tape.

b) Tracer Wire

1) Tracer wire shall be installed with all water and forcemain piping and color coded blue for water or green for forcemain.

2) Tracer wire access must be provided utilizing an approved grade level/in-ground trace wire access box, located in line over the utility to be located. The grade level/in-ground trace wire access box shall be delineated using a concrete marker with a brass plate per Standard Detail.

3) All tracer wire and trace wire products shall be domestically manufactured in the U.S.A.

4) All tracer wire shall have HDPE insulation intended for direct bury, blue in color for water and green in color for sewer, coated per APWA standard.

5) Tracer wire systems must be installed as a single continuous wire, except where using approved connectors. No looping or coiling of wire is allowed.

6) Wire installation method requirements are:

a. Open Trench - Trace wire shall be #12 AWG Copper Clad Steel, High Strength with minimum 450 lb. break load, with minimum 30 mil HDPE insulation thickness.

b. Directional Drilling/Boring - Trace wire shall be #12 AWG Copper Clad Steel, Extra High Strength with minimum 1,150 lb. break load, with minimum 30 mil HDPE insulation thickness.

c. Pipe Bursting/Slip Lining - Trace wire shall be 7 x 7 Stranded Copper Clad Steel, Extreme Strength with 4,700 lb. break load, with minimum 50 ml HDPE insulation thickness.

7) Direct bury wire connectors – shall include 3-way lockable connectors and mainline to lateral lug connectors specifically manufactured for use in underground trace wire installation. Connectors shall be dielectric silicon filled to seal out moisture and corrosion, and shall be installed in a manner so as to

prevent any uninsulated wire exposure.

8) Non locking friction fit, twist on or taped connectors are prohibited.

9) Termination and access requirements as follows:

   a. Tracer wire access points are to be no more than 500' apart.

   b. All tracer wire termination points must utilize an approved tracer wire access box (grade level/in-ground access box as applicable), per Standard Detail.

   c. All grade level/in-ground access boxes shall be appropriately identified with "water" or "sewer" cast into the cap, per Standard Detail.

   d. A minimum of 2 ft. of excess/slack wire is required in all trace wire access boxes after meeting final elevation.

   e. All tracer wire access boxes must include a manually interruptible conductive/connective link between the terminal(s) for the tracer wire connection and the terminal for the grounding anode wire connection.

   f. Grounding anode wire shall be connected to the identified (or bottom) terminal on all access boxes.

10) Test Stations shall be 2 ½" diameter with 2 terminals, green and be equivalent to Bingham and Taylor model P225 SR or Copperhead model LD12 TP and shall be installed in a valve box per Standard Detail.

11) A grounding anode shall be installed at each test station equivalents to Copperhead model ANO-1005.

c) Marker Tape and Tracer Wire Testing

1) Testing of the marker tape and tracer wire shall be performed by the Contractor at the completion of the project to assure they are all working properly. It is the Contractor's responsibility to provide the necessary equipment to perform all testing. Any defective, missing, or otherwise non-locatable units shall be replaced.

## 453 Pavement Repairs

### A. Open Trench Pavement Repair

1. General Requirements

a) All pavement cuts shall be repaired within a maximum of three (3) days from the date the cut is made. If conditions do not permit a permanent repair within the given time limit, permission to make a temporary repair must be obtained from the Town.

b) Pavement repairs shall be made in accordance with the Details.

c) All asphalt pavement utilized to repair open trenches shall comply with all applicable Town of Apex asphalt pavement material and installation Specifications.

d) All pavement patches shall be provided in such a manner that a uniform and smooth driving surface free of depressions and/or bumps is obtained. Pavement patches not meeting this standard shall be milled and replaced.

e) All utility mains installed by open cut across Town or NCDOT roadways shall include steel encasement, sized in accordance with tables found in this specification.

## 454 Trenchless Pipe Installation

### A. Design

1. General Requirements

a) All utility crossings within Town streets shall be made by trenchless methods. State maintained streets within the Town ETJ should also be crossed using trenchless methods. In cases where utility conflicts, rock, or other obstructions prevent trenchless crossings, the Town may consider approving other methods.

b) The preferred trenchless method shall be auger boring. Alternate trenchless methods including microtunneling, guided boring, conventional tunneling, horizontal directional drilling or hand tunneling may be approved after thorough evaluation by the Water Resources Department.

c) In addition to meeting or exceeding all Town requirements, all trenchless crossings shall be approved by and meet the requirements of all controlling legal authorities, such as NCDOT, Norfolk Southern Railway, CSX Corporation, Colonial Pipeline, Cardinal Pipeline, and Dixie Pipeline.

d) Direct bores may be made without a casing pipe on pipelines 6-inches in diameter and smaller.

e) Encasement pipe shall be installed with all trenchless construction methods (excluding horizontal directional drilling when it is approved and as noted above). There shall be a minimum cover of 4-ft between the pavement subgrade and the top of the casing pipe. Under no circumstances shall the pavement subgrade be disturbed.

f) Permanent easements shall be provided at all trenchless pits to allow for future access to casing pipes.

## B. Materials

1. Encasement Pipe

a) Encasement pipe shall be new and manufactured of grade 'B' steel with minimum yield strength of 35,000-psi in accordance with ASTM A139 and A283.

b) All casing pipe shall have machine cut, bevel ends that are perpendicular to the longitudinal axis of the casing. Ends shall be plumb and welded without the use of filler material.

c) Size and minimum wall thickness of smooth wall or spiral welded steel encasement pipe shall be as shown in the below table. Actual wall thicknesses shall be determined by the casing installer based on their evaluation of the required forces to be exerted on the casing when it is installed.

Minimum Wall Thickness of Steel Encasement Pipe

| Encasement Pipe Outside Diameter *(inches)* | Minimum Wall Thickness *(inches)* |
|---|---|
| 14 | 0.375 |
| 16 | 0.375 |
| 18 | 0.375 |
| 20 | 0.375 |
| 24 | 0.375 |
| 26 | 0.500 |
| 28 | 0.500 |
| 30 | 0.500 |
| 36 | 0.625 |
| 42 | 0.625 |
| 48 | 0.750 |
| 54 | 0.750 |
| 60 | 0.750 |
| 66 | 0.750 |

d) Encasement pipe installed for railroad bores shall meet the requirements of the American Railway Engineering Association (AREA) for boring under railroads.

e) Encasement pipe shall be sized in accordance with the standard detail.

2. Casing Pipe Spacers and End Closures

a) The carrier pipe shall rest on steel pipe alignment spacers. The spacers shall have either a bituminous or epoxy coating. A minimum of 3 steel spacers per joint shall be required on carrier pipe less than 36-inches. Carrier pipe greater than or equal to 36-inches shall have a fourth spacer. The steel spacers shall be located evenly along the carrier pipe alignment in such a manner that each spacer supports the same unit weight of carrier main. The spacing interval of the steel spacers shall assure the necessary grade, clearance, and support of the carrier main. The spacers shall be manufactured for the specific carrier pipe and casing pipe diameters being used such that the risers do not allow the pipe to float within the casing.

b) In cases where the encasement pipe is installed in within the easement of facilities with stray current, such as gas lines, high voltage power transmission lines, petroleum lines, railroad tracks, etc., the spacers shall be a composite material such as an ultra-high molecular weight polyethylene plastic to prevent transmitting the stray current to the carrier pipe.

c) In cases where PVC carrier pipe is installed in an encasement pipe, steel spiders with soft contact surfaces rated for use with PVC pipe shall be used.

d) The carrier pipe bells shall not be allowed to contact the interior of the encasement pipe under any circumstances.

e) No blocks or temporary spacers shall be wedged between the carrier pipe and the top of the encasement pipe.

f) The ends of the encasement pipe shall be sealed using solid 8-inch bricks and a non-shrink grout.

g) A 2-inch galvanized vent pipe shall be provided on the upper end of the casing on all stream and railroad crossings.

3. Carrier Pipe

a) All carrier pipe shall be manufacturer provided restrained joint ductile iron pipe except for sewer force mains in which restrained PVC C900 may be utilized in compliance with Section 0800.

4. Polyethylene (PE) Pressure Pipe

a) Pipe shall be certified and listed for potable water distribution products in accordance with NSF 61 and bear the NSF seal on each section of pipe.

b) Outside diameter shall conform with ductile-iron pipe.

c) Material for pipe manufacturing shall be PE 3408 high density polyethylene (HDPE) meeting ASTM D3350 cell classification of 345444C.

d) Pipe shall be pressure class PC 250 with a standard dimension ratio (DR) of 9.

e) Fittings shall be made of material meeting the same requirements as the pipe.

5. Fusible Polyvinylchloride Pipe

a) Fusible polyvinylchloride pipe shall conform to AWWA C900. Testing shall be in accordance with AWWA standards.

b) Pipe shall be DIPS standard dimensions with a minimum pressure rating of 235 psi (DR18) and the size as indicated on the Drawings.

c) Piping shall be made from a PVC compound conforming to cell classification 12454 per ASTM D1784.

d) Fusible polyvinylchloride pipe shall be extruded with plain ends. The ends shall be square to the pipe and free of any bevel or chamfer. There shall be no bell or gasket of any kind incorporated into the pipe.

e) Fusible polyvinylchloride pipe shall be manufactured in standard 40 foot nominal lengths.

f) Fusible polyvinylchloride pipe shall be blue in color for water use or green in color for wastewater use.

g) Pipe generally shall be marked per industry standards, and shall include as a minimum:

1. Nominal pipe size
2. PVC
3. Dimension Ratio
4. Pipe legend or stiffness designation, or AWWA pressure class
5. AWWA Standard designation number
6. Extrusion production-record code
7. Trademark or trade name
8. Cell Classification 12454 and/or PVC material code 1120 may also be included.

h) Pipe shall be homogeneous throughout and be free of visible cracks, holes, foreign material, blisters, or other visible deleterious faults.

## C. Installation

1. General Requirements

a) As the trenchless operation progresses, each new section of encasement pipe shall be joined using full penetration seal welds prior to installation of the casing. Joints shall be electric-fusion welded by operators qualified in accordance with the American Welding Society's standard procedure for arc welds. The welds shall be capable of transmitting all thrust and other loads across the joints.

b) If voids are encountered while installing encasement pipe thirty (30) inches and larger, 2-inch or larger grout holes shall be installed at ten (10) foot centers in the top section of the encasement pipe. The grout

holes shall be used to fill the void spaces with 1:3 Portland cement grout at sufficient pressure to prevent settlement of the roadway, unless NCDOT approval stipulates otherwise. Other grout mixtures may be submitted for approval.

c) In the event that an obstruction is encountered during the trenchless operations, the equipment shall be withdrawn. The pipe shall be cut off, capped, and filled with 1:3 Portland cement grout at a sufficient pressure to fill all voids before moving to another boring site.

d) Restrained joint ductile iron carrier pipe shall be pulled into the casing pipe. Pipe lined with Protecto 401 for sewer application shall never be pushed into a casing.

2. Settlement Surveying

a) For all trenchless operations of 100-ft or more, the ground surface elevations shall be recorded prior to beginning work.

1. At a minimum, survey points shall be identified with a nail or hub located as follows:

i. Road crossings: Centerline and each shoulder/curb

ii. Utility and Pipeline Crossings: Directly above and 10-ft each side of the crossing

iii. All locations: Points shall not exceed 50-ft spacing

2. Elevations at each point shall be recorded with an accuracy of 0.01-ft.

b) Settlement observations shall be made each day until the pipe/casing is fully installed. Once installed, observations shall be made weekly for a period of at least four (4) weeks.

c) Readings shall be reported to the Infrastructure Inspector.

d) In the case of observed settlement, the monitoring points and observation frequency shall be increased as determined by the Town.

3. Horizontal Directional Drilling

a) General

1. Drill pilot hole along the path shown on the Drawings to the following tolerances:

    a. Vertical Location - Plus or minus 1 foot

    b. Horizontal Location - Plus or minus 3 feet.

2. At the completion of the pilot hole drilling, provide a tabulation of coordinates referenced to the drilled entry point which accurately describes the location of the pilot hole.

3. Perform reaming diameter to 1.25 to 1.5 times the outside diameter of the pipe being installed. Prepare pipe to facilitate connection to the remainder of the pipeline being installed.

4. Use care to protect the pipe from scarring, gouging, or excessive abrasion.

5. Method of connection between HDD pipe and other pipe materials shall be as indicated on the Drawings.

6. Pipe shall be deflected within the tolerances as provided by the pipe manufacturer.

7. For drills under structural conditions (i.e., roadways), perform reaming diameter to 2 inches maximum greater than outside diameter of the pipe being installed. If larger size is necessary, provide statement from North Carolina Professional Engineer stating that “an overbore in excess of 2-inches will arch and no damage will be done to pavement or sub-grade”.

b) Fusible Polyvinylchloride (FPVC) pipe

1. General

    a. Installation guidelines from the pipe supplier shall be followed for all installations.

    b. The fusible polyvinylchloride pipe will be installed in a manner so as not to exceed the recommended bending radius guidelines.

2. Handling and Storage

    a. Pipe shall be offloaded, loaded, installed, handled, stored and stacked per the pipe supplier's guidelines. These guidelines include compliance with the minimum recommended bend radius and maximum safe pull force for the specific pipe being used.

3. Fusion Joints

    a. Fusible polyvinylchloride pipe lengths shall be assembled in the field with butt-fused joints. The fusion technician shall follow the pipe supplier's guidelines for this procedure. All fusion joints shall be completed as described in this specification.

4. Fusion Process

    a. Fusible polyvinylchloride pipe will be handled in a safe and non-destructive manner before, during, and after the fusion process and in accordance with this specification and pipe supplier's guidelines.

    b. Fusible polyvinylchloride pipe will be fused by qualified fusion technicians holding current qualification credentials for the pipe size being fused, as documented by the pipe supplier.

    c. Pipe supplier's procedures shall be followed at all times during fusion operations.

5. Installation

    a. Once installed according to manufacturer's requirements, the contractor shall make connections to the open cut pipe by means of mechanical joint fittings, taking care to correct horizontal or vertical alignment with the fittings rather than the Fusible PVC.

## 455 External Corrosion Protection

1. General Requirements

a) External corrosion can occur at an accelerated rate in metallic pipelines such as steel and ductile iron when they are installed in aggressive soils

or when they are installed near other structures or utilities that carry impressed currents. Such facilities that typically utilize impressed current cathodic protection are gas pipelines, such as owned by Colonial Pipeline, Cardinal Pipeline and Dixie Pipeline. Other potential sources that may create stray currents that contribute to accelerated pipeline corrosion are high voltage power transmission lines and railroad crossings.

b) In cases where metallic steel and ductile iron pipelines or encasement pipes are planned for installation in close proximity to any potential sources of stray current or aggressive soils, zinc coated pipe shall be specified and a field analysis consisting of stray current evaluation and soil testing shall be conducted by an experienced technician, as certified by the National Association of Corrosion Engineers, (NACE), to determine the potential for external corrosion and the need for additional protection measures. In cases where stray current conditions and/or aggressive soils are prevalent, a corrosion specialist certified by the NACE or other applicable certification board shall be consulted regarding the design of pipeline protection measures.

c) At a minimum, all stray current protection systems should include bonded joints and sacrificial anodes with a 50-year or longer design life and test facilities in lieu of polyethylene encasement, unless otherwise approved by the Town of Apex. The cathodic protection element of the pipeline design package shall be sealed by Professional Engineer licensed in the State of NC.

d) Full impressed current cathodic protection shall only be utilized when extreme corrosion potential has been proven and/or as otherwise directed by the Water Resources Department and the certified corrosion engineer of record.

e) When field conditions require cathodic protection, the Engineer must provide alignment showing no practical alternative, as well as calculations and design of cathodic protection system. Design shall include, but not be limited to, the provisions of all instruments, anodes, wiring, appurtenant equipment, and accessories and must be specifically called out on the drawings for a complete and operating cathodic protection system.

f) All ductile iron pipe that is installed within 60 feet of any gas line shall be wrapped with a dual layer of 8 mil polyethylene encasement. The dual polyethylene encasement shall meet AWWA C105 requirements for dielectric strength of 800 volts per mil (12,800 volts per a 16-mils thick dual polyethylene system) to shield the ductile pipe from elevated stray currents.

g) Perpendicular crossings of gas lines/easements with ductile iron pipe shall include a dual layer of 8 mil polyethylene encasement across the entire easement width plus a distance of 60 feet on each side of the easement.

## 456 Rock Excavation

1. General Requirements

a) Rock shall be defined as that solid material that cannot be excavated, in the opinion of the Water Resources Director, by any means other than drilling and blasting, drilling and wedging, or boulders and broken concrete exceeding ½ cubic yard in volume. Rock shall be excavated to the same limits as earth excavation except that the trench shall be made 6- inches lower than the outer bottom of the pipe. This 6-inches shall be refilled with 6-inches of #67 stone and thoroughly compacted to the sub-grade level. All blasting shall be done under the supervision of the Town Inspector or Engineer and subject to all applicable regulations. The Town reserves the right to require the removal of rock by means other than blasting where any pipe or conduit is either too close to or so situated with respect to the blasting as to make blasting hazardous. Rock taken from the ditch shall immediately be hauled away and disposed of by the contractor.

b) Blasting procedures shall conform to all applicable local, state and federal laws and ordinances. A blasting permit shall be obtained from the Town's Fire Marshal's Office, prior to any blasting. The application shall be obtained 24-hours before any blasting takes place, and the Fire Marshal may specify the hours of blasting. The contractor shall take all necessary precautions to protect life and property, including the use of an approved blasting mat where there exists the danger of throwing rock or over-burden. The contractor shall keep explosive materials that are on the job site in special constructed boxes provided with locks. Failure to comply with this specification shall be grounds for suspension of blasting operations until full compliance is made. No blasting shall be allowed unless a galvanometer is employed to check cap circuits. Where blasting takes place within five-hundred feet of a utility, structure or property which could be damaged by vibration, concussion or falling rock, the contractor shall be required to take seismograph readings and to keep a blasting log containing the following information for each and every shot:

1) Date of shot
2) Time of shot
3) Crew Supervisor
4) Number and depth of holes

5) Approximate depth of overburden
6) Amount and type of explosive used in each hole
7) Type of caps used (instant or delay)
8) The weather
9) Seismograph instrument and readings

c) This blasting log shall be made available to the Water Resources Director upon request and shall be kept in an orderly manner. It shall be the contractor's responsibility to have adequate insurance to cover any damages resulting from blasting so to hold the Town of Apex harmless from any claims.

# SECTION 600
# WATER DISTRIBUTION SYSTEM


**601 Water Distribution Pipe**
- **A. Design**
- **B. Materials**
- **C. Installation**

**602 Fire Protection**
- **A. Fire Hydrants**
- **B. Automatic Fire Sprinkler Systems**
- **C. Fire Protection During Construction**

**603 Valves and Appurtenances**
- **A. Valves**
- **B. Appurtenances**

**604 Water Main Taps and Services**
- **A. Design**
- **B. Materials**

**605 Irrigation Systems**

**606 Testing and Inspections**
- **A. General**
- **B. Testing**

**607 Repair and Abandonment**

## 601 Water Distribution Pipe

### A. Design

The following Standard Specifications and associated Standard Detail Drawings shall apply to all water system extensions and development of the Apex municipal water system. The Standard Specifications included herein shall apply to all aspects of the Apex water system that is owned, operated and maintained by the Town of Apex.

All utility extension permits must be obtained prior to construction. Refer to General Provisions in Section 0200 for further requirements.

1. Location: Water transmission lines shall be located and sized in accordance with the current "Water System Master Plan" or as directed by the Town, and shall extend to the adjacent properties to provide an adequate network. All public water mains shall be located within dedicated right of way of Town roads, outside of the right of way on NCDOT roads, or dedicated easements with a minimum width of 20 feet. Dedicated easements for water mains and appurtenances shall be recorded as "Town of Apex Public Waterline Easement." Town of Apex utility and pipeline easements shall contain only Town of Apex utilities unless otherwise approved by an approved site plan or encroachment agreement. Easements that are shared by water mains and greenway paths shall have a minimum width of 30 feet. Easements shall be acquired by the Developer (unless utility is designed as part of a Capital Improvement Project) prior to construction approval.

   If the water main is located within the road right-of-way, a clear width equal to or greater than the easement width required must be available. If adequate width is not available within the right-of-way, additional easement outside of the right-of-way must be maintained. For example, if a water main normally requiring a 20 foot easement is installed 5 feet inside of the right-of-way, an additional 5 feet of easement must be obtained outside of the right-of-way to provide a clear total width of 10 feet on each side of the pipe.

   All water main extensions and distribution facilities which connect to the water distribution system of the Town shall be considered as public facilities up to the metering point. Therefore, all such facilities must be installed in public street right-of-way (not alleys) or centered within an easement. Extensions shall terminate at the furthermost property line fronting the property.

   Where deemed necessary to enhance water flow and/or pressures in the area, extensions may be required to be “looped” to an existing water main or “dead end” line within the area being developed.

If a proposed development site has a gap in road frontage, the development shall extend the water main along the road frontage to eliminate the gap in water service, unless otherwise approved by the Water Resources Director.

Mains shall not be installed under any part of water impoundments or area to be impounded. Mains shall not be installed through, above, or below any retained earth structure. Main location and depth shall not be within the theoretical 1:1 slope of any impoundment dam or structure, or shall maintain a minimum of 10' horizontal separation from the toe of slope, whichever is greater. The entire easement shall be outside of the toe of slope, unless prior approval is obtained from the Water Resources Director.

Easement Areas: No permanent structures, equipment, retaining walls, embankments, impoundments, or other elements that would inhibit maintenance operations shall be constructed within a utility and pipeline easement. Fences may be allowed across easements provided that appropriate access gates or removable panels have been installed to allow utility maintenance. Fences shall not be installed parallel within utility easements. Fill or cut slopes greater than 4:1 are not allowed to extend into easements. Easements must be clearly labeled as public or private.

Where public water mains are installed within easements crossing private property, the Water Resources Department shall have the right to enter upon the easement for purposes of inspecting, repairing or replacing the water mains and appurtenances. Where paved private streets, driveways, parking lots, etc. have been installed over the public water mains, the Town of Apex shall not be responsible for the repair or replacement of pavement, curbing, etc. which must be removed to facilitate repairs. The Water Resources Department shall excavate as necessary to make the repair, and shall backfill the disturbed area to approximately the original grade. Replacement of privately owned pavement, curbing, walkways and any other private infrastructure shall be the responsibility of the property owner or Homeowner's Association.

Easements shall be accessible from public rights-of-ways. If easement is not accessible perpendicular from right-of-way due to steep slope, environmental feature, or other obstacle, additional easement may be necessary.

Only one utility can be installed per easement, unless prior approval from the Water Resources Director is obtained.

2. Sizing: Major transmission lines shall be sized in accordance with the "Water System Master Plan" or as directed by the Town. Six (6) inch

mains may be used on a case by case basis when the Town has determined that a sufficient grid exists and the existing network supports using six (6) inch mains. The total maximum length of 6 inch and 8 inch lines, without connecting to a larger main, is 1200 feet and 2000 feet, respectively. Where the existing network is lacking connectivity, lines shall be upsized to provide adequate fire flow as directed by the Director of Water Resources. All lines shall be designed to maintain a minimum of 20 psi at maximum daily demand with applicable fire flow conditions. Water distribution facilities for Multi-Family Units, Apartments, Condominiums, and Townhouse Developments shall comply with the provisions for Business, Commercial, and Industrial Zoning Districts indicated below.

Business, Commercial, and Industrial Zoning Districts - Water mains shall be 8- inch and 12- inch minimum. Eight-inch shall be used only when it completes a good grid and the maximum length of 8-inch lines without connection to a larger feeder main is 1,200 feet unless special approval for deviation from this requirement is granted by the Director of Water Resources.

Where water mains dead end or are terminated for future extension, at least one full length stick of ductile iron pipe shall be installed with a thrust collar, main line valve, and blow-off assembly. This dead end shall terminate within a right-of-way or dedicated easement.

Dead end mains may be extended to existing mains in adjacent streets when it is practical to do so in order to enhance flow, water quality, and/or pressure in the affected area.

3. Restraint:

All valves and fittings shall be restrained. Pipe joints shall also be restrained an adequate length away from valves and fittings in accordance with AWWA manual M41 (or the latest edition of *Thrust Restraint Design for Ductile Iron Pipe* as published by the Ductile Iron Pipe Research Association). The standard joint restraint method shall be to use manufacturer provided restrained joint pipe and fittings.

a) 6” to 12” Diameter Pipe: For pipe 6-inches through 12-inches, the following table may be used to determine the required restrained length of pipe for single occurrences of valves or fittings within the pipe system. The table may not be used for combined bends or offsets where a series of fittings occur. In lieu of using the below table, a pipe restraint plan detailing all assumptions and calculations may be provided by the NC Professional Engineer sealing the plan drawings. In either case, the method of restraint to be used and the

length of pipe to be restrained (if applicable) shall be clearly identified on the plans at all necessary locations.

**Required Restrained Lengths for Single Fittings and Valves for Pipe 6-inches to 12-inches in Diameter (in Feet, Both Directions unless otherwise noted)**

| | **6”** | **8”** | **10”** | **12”** |
|---|---|---|---|---|
| **45° Horizontal**<br>**45° Vertical Up**<br>**45° Vertical Down** | 34’<br>34’<br>53’ | 44’<br>44’<br>69’ | 53’<br>53’<br>82’ | 61’<br>61’<br>96’ |
| **22½° Horizontal**<br>**22½° Vertical Up**<br>**22½° Vertical Down** | 17’<br>17’<br>26’ | 21’<br>21’<br>33’ | 26’<br>26’<br>40’ | 30’<br>30’<br>47’ |
| **11¼° Horizontal**<br>**11¼° Vertical Up**<br>**11¼° Vertical Down** | 8’<br>8’<br>13’ | 11’<br>11’<br>17’ | 13’<br>13’<br>20’ | 15’<br>15’<br>23’ |
| **Tee**<br>***(Restrain the Branch)*** | *6”* – 115’ | *6”* – 111’<br>*8”* – 154’ | *6”* – 107’<br>*8”* – 151’<br>*10”* – 186’ | *6”* – 103’<br>*8”* – 148’<br>*10”* – 184’<br>*12”* – 220’ |
| **Reducer**<br>***(Restrain Larger Pipe)*** | N/A | 70’ | 10” x 8” – 67’<br>10” x 6” – 122’ | 12” x 10” – 68’<br>12” x 8” – 123’<br>12” x 6” – 169’ |
| **Dead Ends (*Caps and Plugs*) & Inline Valves** | 126’ | 165’ | 198’ | 232’ |

b) All valves, pipe, and fittings: **Projects with pipe diameters greater than 12-inches, poly-wrapped pipe, or combined bends must have a pipe restraint plan with the method of restraint to be used and the length of pipe to be restrained clearly identified on the plans at all necessary locations.** The pipe restraint plan must be calculated in accordance with AWWA manual M41 (or the latest edition of *Thrust Restraint Design for Ductile Iron Pipe* as published by the Ductile Iron Pipe Research Association). The plan must also account for the actual soil types that exist at the project site. A minimum safety factor of 1.5 (2.0 if/when required by NCDOT) and a minimum pressure of 200 PSI must be used.

c) Valves: Valves shall be restrained in a manner consistent with operation as a dead end. This includes restraining the valve to the pipe and restraining a sufficient number of pipe joints on both sides of the valve to accommodate dead end restraint. Valves located at waterline intersections (at tees and crosses) shall have no joints between the valve and fitting.

d) Dead Ends: All MJ cap and plug fittings, including tapped caps, shall be restrained with approved wedge action retainer glands. The

adjacent pipe shall be restrained the distances specified above (or on the sealed pipe restraint plan). Reaction blocking shall not be used to restrain caps and plugs.

e) All pipe restraint systems shall be factory produced by the manufacturer. Approved wedge action retainer glands or bell restraints may be used for pipe/fittings up to (but not including) 16" in diameter. Restraint on mains 16" and larger shall be factory produced by the manufacturer.

f) Restraining systems not included within this Specification shall require written approval prior to utilization. All joint restraint products that include the means of restraint within the joint gasket shall be prohibited in the Town of Apex water system.

4. Depth of Installation:

All water mains shall have a minimum cover of 3 feet measured from the top of the pipe to the finished grade. Water mains shall have a maximum cover of 8 feet measured from the top of the pipe to the finished grade. Installations requiring greater than 8 feet of cover due to road crossings, stream/wetland crossings, or other conflicts must have prior approval from the Water Resources Director.

When water lines are installed along a roadway they shall be installed at sufficient depth to maintain three (3) feet of cover to the subgrade of any future road improvements including potential vertical alignment changes.

5. Relation to Sanitary and Storm Sewers:

Separation between Potable Water Mains and Sanitary Sewer Mains or Storm Sewers.

a) Parallel Installations: 10-ft lateral separation (pipe edge to pipe edge) or minimum 5-ft lateral separation and water line at least 18-inches above sanitary sewer line measured vertically from top of sewer pipeline to bottom edge of water main.

b) Crossings (Water Main Over Sanitary or Storm Sewer): All water main crossings of sanitary sewer lines shall be constructed over the sewer line in conformance with Town of Apex Specifications. At a minimum, 18-inches of clearance shall be maintained between the bottom edge of the water main and the top edge of the sanitary sewer main, 24-inches of clearance shall be maintained between the bottom edge of the water main and the top edge of the storm sewer main. If 18-inches or 24-inches, respectively, of clearance is not

achievable, the water main and sanitary/storm sewer main shall both be constructed of ductile iron pipe with joints in conformance with water main construction standards. The sanitary sewer pipe shall be ductile iron the entire run from manhole to manhole. When the separation between pipelines is 18-inches or less, the void space between the pipes shall be filled with minimum 500-psi, quick setting, non-excavatable flowable fill extending 3-ft on both sides of the crossing. Regardless of pipe material, at least 12-inches of vertical separation is required for both sanitary and/or storm sewer crossings of potable water mains.

c) Crossings (Water Main Under Sanitary or Storm Sewer Line): Allowed only as approved by Town of Apex, when it is not possible to cross the water main above the sanitary or storm sewer line. At a minimum, 18-inches of separation shall be maintained, (measured from pipe edge to pipe edge) and both the water main and sanitary/storm sewer shall be constructed of ductile iron in conformance with water main construction standards. The sanitary sewer pipe shall be ductile iron the entire run from manhole to manhole. If local conditions prevent providing 18-inches of clearance, then at least 12-inches of clearance shall be provided and the void space between the pipes shall be filled with minimum 500-psi, quick setting, non-excavatable flowable fill extending at least 3-ft on both sides of the crossing.

## B. Materials

General: All water main distribution pipe shall be ductile iron. The following table lists approved manufacturers of DIP, DIP fittings, and RJDIP that are allowable for installation within the Town's system.

| Product Category | Approved Manufacturer | Model/Series | Pressure/Load Rating | Reference Standard | Requirements |
|---|---|---|---|---|---|
| Ductile Iron Pipe | US Pipe | Tyton Joint | 250-350 psi | AWWA C150 and C151 | Cement mortar lined with exterior bituminous coating. McWane pipe stamped "McWane by Atlantic States or Clow" only |
| | American (ACIPCO) | Fastite Joint | | | |
| | McWane | Tyton Joint | | | |
| Ductile Iron Fittings | Sigma | Mech. Joint | 250-350 psi | AWWA C110/C111 and AWWA C153 | Shall always meet or exceed pipe pressure rating |
| | Tyler Union | Mech. Joint | | | |
| | SIP Industries | Mech. Joint | | | |
| | Star | Mech. Joint | | | |
| | American | Mech. Joint | | | |
| Ductile Iron Restrained Joint Pipe | US Pipe | TR Flex | 250-350 psi | AWWA C150 and C151 | Boltless restraint unless otherwise specified |
| | American (ACIPCO) | Flex Ring | | | |
| | McWane | TR Flex (pipes 24" and smaller) | | | |

1. Ductile Iron Pipe

   a) Ductile iron pipe shall be designed and manufactured in accordance with AWWA C150 and C151 and provided in nominal 20-ft lengths. The minimum required pressure ratings for ductile iron pipe and required laying conditions are tabulated below. For all other installations other than specified, the laying condition, bedding requirements or the minimum pressure class rating and/or thickness class shall be increased in accordance with AWWA C151. A pipe thickness design shall be submitted for external loading in all cases where the pipe depth exceeds the specified range of depths outlined in the following table.

**Pressure Class, Max. Depth and Laying Condition for DI Water Mains**

| Pipe Diameter | AWWA C-150, Laying Condition | Pressure Class | Maximum Depth of Cover |
|---|---|---|---|
| 6-8 -inch | type 1 | 350 psi | 3-16 feet |
| 6-8 -inch | type 4 | 350 psi | 16-20 feet |
| 10-12 -inch | type 1 | 350 psi | 3-10 feet |
| 10-12 -inch | type 4 | 350 psi | 10-20 feet |
| 14-20 -inch | type 4 | 250 psi | 3-20 feet |
| 24-30 -inch | type 4 | 250 psi | 3-20 feet |
| 36-42 -inch | type 4 | 300 psi | 3-20 feet |

*Any installation deeper than 20 feet must obtain approval from the Water Resources Director and no practical alternative must be proven.

**Note:** For cases not specified, a ductile iron pipe and bedding design certified by a Professional Engineer licensed in the State of North Carolina shall be required in compliance with AWWA C150 and the Ductile Iron Pipe Research Association.

b) Pipe joints shall be mechanical joint or push-on type as per AWWA C111. Pipe lining shall be cement mortar with a seal coat of bituminous material in accordance with AWWA C104. All buried ductile iron pipe shall have a bituminous exterior coating in accordance with AWWA C151.
c) Pipe manufacturer must have a supplier within 200 miles of the Town of Apex.

2. Ductile Iron Fittings

All ductile iron fittings shall be provided in conformance with AWWA C110 for standard ductile iron fittings and AWWA C153 for compact ductile iron fittings. All fittings shall be pressure rated for a minimum 350-psi through 24-inches in diameter and 250-psi for fittings greater than 24-inches in diameter. In cases where minimum pressure standards are less than the pipe specification, fittings shall always be pressured rated to meet or exceed the pressure ratings for the specified pipe. All fittings for potable water service shall be provided with cement mortar linings and asphaltic seal coats in accordance with AWWA C104. All ductile iron fittings shall have an asphaltic exterior coating in accordance with AWWA C151. All ductile iron fittings shall be provided with mechanical joint end connections or proprietary restrained joints from an approved manufacturer. Gaskets shall be provided in conformance with AWWA C111 with EPDM rubber gaskets preferred over SBR. Two 45 degree fittings shall be used in lieu of 90 degree fittings in all horizontal and vertical installations, with exception of reverse taps.

Fitting manufacturer must have a supplier within 200 miles of the Town of Apex.

3. Restrained Joint Ductile Iron Pipe
   All restrained joint ductile iron pipe unless otherwise specified shall be of the boltless restrained joint type. For installations requiring welded locking rings, the rings shall be factory welded.

   All proprietary pipe restraint systems shall be approved by the Town of Apex and provided in compliance with all standards for coatings, linings, pressure classes, etc. as required for ductile iron pipe. All restrained joint pipe shall be installed based on laying conditions, pressure class, etc. as required for typical ductile iron pipe.

   Restraining systems not included within this Specification shall require written approval prior to utilization. All joint restraint products that include the means of restraint within the joint gasket shall be prohibited in the Town of Apex water system

   Pipe manufacturer must have a supplier within 200 miles of the Town of Apex.

## C. Installation

1. Ductile iron pipe shall be installed in accordance with the requirements of AWWA C600 and the Ductile Iron Pipe Handbook published by the Ductile Iron Pipe Research Association. Materials at all times shall be handled with mechanical equipment or in such a manner to protect them from damage. At no time shall pipe and fittings be dropped or pushed into ditches.

2. Pipe and fitting interiors shall be protected from foreign matter and shall be inspected for damage and defects prior to installation. In the event foreign matter is present in pipe and fittings, it shall be removed before installation. Open ends of pipe shall be plugged or capped when pipe laying is not in progress.

3. All pipe shall be constructed with at least 36 inches of cover below the finished surface grade or road subgrade. Pipe shall be laid on true lines as directed by the Engineer. Trenches shall be sufficiently wide to adjust the alignment. Bell holes shall be dug at each joint to permit proper joint assembly. The pipe shall be laid and adjusted so that the alignment with the next succeeding joint will be centered in the joint and the entire pipeline will be in continuous alignment both horizontally and vertically. Pipe joints shall be fitted so that a thoroughly watertight joint will result. All joints will be made in conformance with the manufacturer's recommendations for the type of joint selected. All transition joints between different types of pipe shall be made with transition couplings approved on shop drawings showing the complete assembly to scale.

4. Prior to beginning construction, the Contractor shall contact local utility companies and verify the location of existing utilities. The Contractor shall be completely and

solely responsible for locating all existing buried utilities inside the construction zone before beginning excavation. The Contractor shall be solely responsible for scheduling and coordinating the utility location work. When an existing utility is in conflict with construction, it shall be exposed prior to beginning construction to prevent damage to the existing utility.

5. All valves that are under the ownership and acceptance of the Town of Apex municipal water system shall be operated only by trained personnel of the Town of Apex. Existing valves in the Town of Apex water system will not be operated without a minimum notice of 24 hours. Contractor's personnel shall only be responsible for operating valves within new construction areas that are not directly connected with the existing municipal water supply. At such time when the valves in new construction areas are connected with the municipal water supply, the valves shall only be operated by Town of Apex personnel or in limited circumstances by Contractor's personnel after receiving authorization from the Operator in Responsible Charge of the water distribution system.

6. The unloading and loading of pipe, fittings, valves, and related accessories shall be performed with care so as to avoid any damage to these materials. All such materials shall not be stored directly on the ground, but shall be on pallets, or other suitable supports, so as to prevent the entry of mud and debris into the pipe or other materials. Contractor shall also endeavor to store these materials in accordance with any special practices as required by the manufacturer.

7. Fittings shall be installed at the location indicated on the drawings with care taken to insure that joints are fully homed and fully and property supported.

8. Water mains shall not be installed within roundabouts or alleys.

## 602 Fire Protection

### A. Fire Hydrants

1. Sizing of Mains

   a) Water mains shall be sized in order to meet minimum fire flow conditions according to the type and classification of the proposed development. Mains shall be sized in accordance with conditions set forth within the Town's Water Distribution Extension permit application.

2. Location

   a) All fire hydrants shall be installed on a minimum 6 inch water line. Only one fire hydrant may be installed when the line is served by a 6 inch tap and is not looped to another main. There shall be at least one fire hydrant at each street

intersection. Hydrants at intersections shall be located in accordance with the Standard Details. Valves provided on the fire hydrant branch supply line shall be located within 5-ft of the main line. The maximum length of a fire hydrant leg shall not exceed 50 feet.

b) In residential districts the maximum distance between hydrants, measured along street centerlines, shall be 500 feet. When residential intersections are less than 700 feet apart, a hydrant is not required between the intersections. For single-family residential projects, a hydrant shall be located at the end of all cul-de-sacs.

c) In business, office and institutional, and industrial zoning the maximum distance between hydrants, measured along street centerline, shall be 300 feet. If a building is completely equipped with a fire sprinkler system and the project is developed with a private water distribution system, all parts of the building shall be within 300 feet of a hydrant. Hydrants positioned greater than 50 feet from the public water main shall occur on a looped water main.

d) All premises where buildings or portions of the building are located more than 300 feet (commercial) or 500 feet (residential) from a fire hydrant, shall be provided with approved on-site fire hydrants and water mains capable of supplying the fire flow required by the Fire Department.

e) Residential developments which do not meet minimum fire flow requirements shall have individual fire protection systems designed and installed at each residence. Residential fire systems must be current Town Backflow Prevention Protection, listed under Section 620.

f) On thoroughfares and collector streets with access points only at street intersections, hydrants shall be located at each street intersection and at 1000 foot intervals along the street. Where these intersections are less than 1200 feet apart, no hydrant is required between the intersections. Fire hydrants shall be placed in a staggered arrangement on both sides of any roadway classified as a major or minor thoroughfare with the hydrant spacing as referenced above.

g) Where sprinkler systems are used, a fire department connection shall be within 50 feet of an accessible fire hydrant, unless otherwise permitted by the Fire Department.

h) Any proposed, relocated, or replaced water main that includes new fire hydrants shall require submittal of fire flow calculations.

i) Fire hydrant legs shall not be tapped from water service connections, they shall be tapped directly from the main line.

3. Specifications

Hydrants shall conform to AWWA C502 with a minimum valve opening of 4 1/2 inches. Hydrants shall be furnished with a 5 inch Storz steamer and double 2 1/2 inch hose connections with caps and chains, National Standard Threads, mechanical joint, 1 1/2 inch pentagon operating nut, open left, painted fire hydrant red, bronze to bronze seating, a minimum 4 foot bury depth with a break away ground line flange and break away rod coupling. The hydrant bonnet will be designed with a sealed oil or grease reservoir with O-ring seals and a Teflon thrust bearing. Fire hydrant caps shall be attached to the body of the hydrant with a minimum 2/0 twist link, heavy duty, non-kinking, machine chain. All fire hydrants shall be designed and rated for a working pressure of 250-psi or greater.

4. Installation

Hydrants shall be set plumb, properly located with the pumper nozzle facing the closest curb of a fire lane or street, but not a parking space. The back of the hydrant opposite the pipe connection shall be firmly blocked against the vertical face of the trench with 1/3 cubic yard of concrete. Double bridle rods and collars shall be connected from the tee to the hydrant. All joints between the tee and the hydrant shall be mechanical joints restrained with wedge action retainer glands. Stainless steel rods not less than 3/4 inch diameter may also be used to restrain the assembly. A minimum of 8 cubic feet of stone shall be placed around the drains. The backfill around the hydrants shall be thoroughly compacted and closely match the elevation on the approved plans. Hydrant extensions will not be allowed on new or retrofit installations. Hydrant installation shall be in accordance with the Details. Hydrant tees may be used upon approval of the Water Resources Department. A clear level space of not less than 10 feet shall be provided and maintained on all sides of a fire hydrant for immediate access. Clearance from the ground surface to the steamer nozzle shall be between eighteen (18) inches and twenty-four (24) inches.

5. Depth of Bury:

*Typical 90-Degree Hydrant Shoe Installations*:
The maximum depth of bury for all new fire hydrants with 90-degree hydrant shoes shall be 5-ft from the breakaway flange connection. The breakaway flange or safety coupling shall be oriented vertically just above finished grading and bolted directly to the fire hydrant in compliance with manufacturer standards. The breakaway flange or safety coupling shall not be buried.

*Vertical Shoe Hydrant Installations*:
For installations requiring depth of bury greater than 5-ft, the fire hydrant shall be equipped with a vertical shoe arrangement that provides for full extension of the lower valve plate against a stopping mechanism located inside the vertical shoe to maximize hydraulic flow conditions through the hydrant. The vertical shoe shall

be equipped with flanged connections. The maximum depth of bury for vertical shoe installations shall not exceed 4-ft measured from the breakaway flange to the bottom of the vertical hydrant shoe. The vertical shoe and all piping included in the hydrant supply line shall be restrained with blocking and rodding or blocking with wedge action retainer glands or standard Aquagrip, Grip Ring, or Romac connections.

6. Hydrant Relocations: For installations where hydrants will be relocated, all hydrants with greater than 20-years of operational service, as indicated by the date of manufacture provided on the hydrant, shall be replaced with new fire hydrants. The existing fire hydrant shall be turned over to the Town of Apex Public Works Department.

   For installations where the hydrant to be relocated has less than 20-years of operational service, the existing hydrant may be relocated. The existing hydrant shall still be disinfected, flushed and pressure tested.

   All fire hydrants shall be initially tagged and/or bagged “NOT IN SERVICE”. This tag or bag shall not be removed until approved by the Inspector.

## B. Automatic Fire Sprinkler Systems

1. General: Four (4) complete sets of working plans and calculations for all fire sprinkler systems and standpipe systems shall be submitted as required by the Inspections and Permits Department for review and approval. If 20 sprinkler heads or more are modified or added to an existing sprinkler system, if any modifications occur in the hydraulically calculated remote area, or the hazard classification changes, a plan submittal including complete calculations and a permit will be required. All fire sprinkler systems shall be installed with an alarm check valve installed in each riser with all required appurtenances (example: retard chamber, water motor gong, pressure gauges, etc.). Exception: NFPA 13 D and 13 R residential sprinklers when approved by a fire official. All installations, minor repairs, or minor replacements shall be performed by a licensed fire sprinkler contractor. Contact the Inspections and Permits Department for a permit application.

2. Design: Approved working plans shall be in complete compliance with NFPA No. 13, 13D, 13R, 14, 231, 231C, 231D, 231F and Town Specifications. An NFPA above ground material and test certificate and NFPA underground material and test certificate are required after completion of designated, approved work.

3. Hydraulic Design: If a system is hydraulically designed, the following design criteria must be followed:

a) Safety Margin: In all cases, a fixed minimum safety margin of at least 10-psi shall be applied to the design calculations. (Example: Demand = 70 psi, Supply $\geq$ 80 psi)

b) Hose Allowances: Both exterior and interior hose allowances shall comply with NFPA 13 requirements.

c) Water Supply Pressure: The sprinkler system designer shall be responsible for verifying system pressure. Refer to Town of Apex Policy Statement 129 regarding Minimum Water Supply Pressure.

4. Backflow Prevention: When a fire protection system is proposed, with a Fire Dept. connection or as otherwise required by the Cross Connection Ordinance a reduced pressure principle detector assembly (RPDA), two and one half inch or greater, shall be installed on the supply side of the sprinkler fire protection line inside the riser room. A two inch or less reduced pressure principle assembly may be allowed if the site is designed for that size. At no time shall any fire backflow preventer outlet be smaller than the water pipe inlet. These backflow prevention devices must be UL listed and/or listed by Factory Mutual Research Corporation. Reduced pressure principle detector assemblies shall not be arranged vertically. For all RPDA's, a relief valve drip cup piped outside the building shall be provided. The relief valve drain may be piped to the main building drain but must meet current specification listed in Section 620 or the drain be sized per the manufacturer recommendations, whichever is more stringent.

5. Post Indicator Valve (PIV): A post indicator valve may be provided at the right of way or edge of easement at least 40 feet from the building if space permits. Each connection into the building shall have a post indicator valve. The top of the PIV shall be 30-42 inches above finished grade and 36-inches of unobstructed access perimeter shall be maintained around the PIV.

   In urban settings, a wall mounted indicator valve may be used where there is no suitable location for a post mounted indicator valve. Wall mounted indicator valves shall be centered 30–42 inches above the finished grade. It shall be greater than 10-ft from any door, window, or other protected opening along the wall.

   All indicator valves regardless of type shall have an electronically controlled tamper switch. All PIVs shall be made of ductile iron construction and shall be UL listed and FM approved. The stand pipe of all PIV's shall be painted red.

6. Fire Department Connection: Where automatic fire sprinkler systems or standpipe systems are used, a fire department connection with National Standard threads shall be provided within 50-ft of a fire hydrant, except for town homes, apartment buildings, and within urban settings where greater lengths may be permitted. When a sprinkler system serves only part of a large structure, the fire department

connection shall be labeled, with minimum 2 inch letters on a permanent sign, as to which section of the structure that sprinkler riser serves.

7. Dedicated Riser Room: A dedicated sprinkler riser room is required providing an entry door to the room from the exterior of the building. All dedicated riser rooms shall be equipped with a floor drain sized appropriately to prevent flooding. The floor drain shall be piped to storm system or main building drain. The floor drain shall be provided with a circular raised ring/hub around the floor drain to prevent debris and/or chemicals from entering the drain during an emergency spill. The hub shall be fabricated of cast iron or other corrosion resistant material and extend at least 3-inches above floor elevation. All BFPs located inside of a building must have direct access to that room from the building exterior.

8. Alarm Communication: All sprinkler systems are to have alarm communication equipment to fully comply with NFPA 72. Equipment must be fully functional and reporting to a UL listed central receiving station before a Certificate of Occupancy is issued for the facility.

9. Access: All buildings which have an elevator, a fire alarm system monitored by a central receiving station, or a fire sprinkler protection system shall provide a “Knox Box” key entry system. This “Knox Box” shall be mounted on the exterior entrance to the dedicated riser room or at the normal fire department entrance when no fire sprinkler system is provided and there is no dedicated riser room. Mount “Knox Box” on wall at 5 feet A.F.F. on door handle side of dedicated riser room door or entrance door. This “Knox Box” shall be ordered through the Town Fire Department and shall be in place before a Certificate of Occupancy is issued. Keys to access the facility shall be provided to the Fire Department by the owner/manager. An access door directly to the mechanical room or mechanical storage area shall be provided.

10. Identification: The exterior door leading to the dedicated sprinkler riser room shall be labeled with minimum 2 inch lettering designating “SPRINKLER RISER ROOM” in a contrasting color. Durable vinyl lettering is suggested.

11. Fire Alarm Panel Location: When a building is protected by an automatic sprinkler system and has a fire alarm system, the fire alarm control panel or a remote annunciation of the fire alarm control panel shall be placed in the sprinkler riser room. This control panel shall have the capacity of silencing and resetting. Adjacent to the fire alarm control panel shall be a framed zone map. Nomenclature shall correspond with the zone map. Submit four complete sets of plans and specifications to the Inspections and Permits Department for approval prior to installation of equipment or wiring. When there is no sprinkler system in a building, the fire alarm control panel or remote annunciator shall be located at the normal fire department entrance.

## C. Fire Protection During Construction

The fire protection water supply system, including fire hydrants, shall be installed and be in at least functional status prior to placing combustible materials on the project site. If phased construction is planned, coordinated installation of the fire protection water system is permitted. Coordination of the water system will be done through the Water Resources Department.

## 603 Valves and Appurtenances

## A. Valves

1. General

a) Valves shall be installed on all branches from feeder mains and hydrants according to the following schedule: 4 valves at crosses; 3 valves at tees; one valve on each hydrant branch and elsewhere as directed by the Director of Water Resources. When a loop section of water line is connected back into the feeder main within a distance of 200 feet or less, only one valve will be required in the feeder main. In all cases where new water mains are connected to an existing water distribution line, valves shall be located at all end points and at intermediate points throughout the new system extension to assure testing requirements can be met without interfering with the operation of the existing system.

b) Where no water line intersections are existing, a main line valve shall be installed at every 100 feet per 1 inch diameter main up to a maximum distance of 2000 feet between valves.

c) Valves shall be properly located, operable and at the correct elevation. The maximum depth of the valve nut shall be 5 feet without an extension kit. When valve extension kits are used, they must be manufactured by the same company which manufactured the valve.

d) Valves shall be set at locations shown on the plans with care being taken to support the valve properly and to accurately position the valve box over the operating nut of the valve. When valves are located in street right-of-way, but out of pavement, the boxes shall be adjusted to finish grade and a concrete collar 2-feet square and 6-inches thick shall be poured around the box ½-inch from the top of the casting, in lieu of the poured in place concrete a pre-cast concrete collar may be used such as manufactured by Brooks, Inc. or Buckhorn Products. Valve boxes located in the pavement shall be set flush with the current pavement. If the pavement requires a future final lift, the valve boxes shall be adjusted no more than 60 days prior to completion of the final lift. Stem extensions are allowed so that nut is within 30” of final grade.

When valves are located outside of street right-of-way, the boxes shall be

adjusted 6 inches above the finished grade, and a concrete collar 2-feet square and 6-inches thick shall be poured around the casting or approved concrete donut with marker. ARV's must be located at high points with positive slope on the line to the ARV in both directions.

2. Combination Air Valves

a) Combination air valves shall be provided to purge air from the system at startup, vent small pockets of air while the system is being pressurized and running, and prevent critical vacuum conditions during draining. Combination air valves rated for potable water use shall be installed at all high points of water lines 8 inches in diameter or larger and at other locations such as major changes in grade as directed by the Town. A high point shall be determined as any high location where the difference between the high elevation and adjacent low elevation exceeds 10-ft, unless otherwise determined by the Director of Water Resources based on special circumstances.

All combination air valves shall be provided in conformance with AWWA C-512. The water main shall be installed at a grade which will allow the air to migrate to a high point where the air can be released through an air valve. A minimum pipe slope of 1 foot in 500 feet should be maintained.

b) The combination air valve shall be sized by the Engineer, and approved by the Town. Combination air valves shall be of the single housing style with Type 304 or 316 stainless steel body that combines the operation of both an air/vacuum and air release valve. The valve shall be rated for minimum 230 PSI working pressure. The combination air valve shall be provided with cylindrical shaped floats and anti-shock orifice made of high density polyethylene. Combination air valves with spherical floats shall not be accepted. All combination air valves shall be installed in accordance with the Details.

c) 2 inch combination air valves shall be installed in a standard 4-foot diameter eccentric manhole. The 2 inch valve shall have a 2 inch male NPT inlet. Connection to the main shall be with a saddle tap in the same sizing as the combination air valve assembly and isolated with a gate valve also of the same size. The isolation gate valve shall be provided with NPT threads and connected with "no lead" brass (meeting UNS C89833 as per ASTM B584) or bronze piping. Brass or bronze ball valves may be used in lieu of gate valves for 2-inch installations. The isolation valve shall be rated for 200-psi service or greater.

d) Combination air valves 3-inches and greater shall be installed in a flat top manhole sized according to the water main diameter. Mains less than or equal to 20" shall utilize a 5 foot diameter manhole and larger mains shall utilize a minimum 6 foot diameter manhole. All connections shall be by flange joints.

Connection to the main shall be by an MJ x FLG tee with the branch diameter equal to at least half of the main diameter. If needed due to larger diameters, a flanged reducer shall be provided prior to the flanged gate valve sized equally to the flanged combination air valve.

Precast concrete manholes shall meet the requirements of the Standard Details.

3. Gate Valves, Less than 4-inches for Blowoff Assemblies

Gate valves for blowoff installations sized smaller than 4-inches, shall be resilient seated wedge type with a non-rising stem and a 2 inch operating nut in compliance with AWWA C509. The smaller diameter gate valves shall be provided with triple O-ring seals and threaded end connections in compliance with ANSI B2.1. Gate valves smaller than 2-inches shall be identified “no lead” and consist of brass components designated under UNS C89833 as per ASTM B584. The small diameter gate valves shall be rated for a minimum pressure rating of 200-psi.

4. Gate Valves, 6-inches to 12-inches

All valves for potable water applications, 6-inches in diameter to 12-inches in diameter shall be resilient seated wedge gate valves in conformance with the requirements of AWWA C509, (grey or ductile iron body) or AWWA C515, (reduced wall ductile iron body). All coating materials used in the construction of gate valves for potable water applications must comply with NSF 61 to assure lead free construction. All gate valves shall be designed for a working pressure of 250-psi with a minimum UL listing and FM approval rating of 200-psi. Gate valves shall be fusion bonded epoxy (FBE) coated both interior and exterior at a minimum of 10-mils and the FBE coating shall be provided in conformance with AWWA C550. All gate valves shall be assembled with stainless steel bolts.

All gate valves 6-inches in diameter to 12-inches in diameter shall be installed in the vertical position and shall be provided with mechanical joint fittings. Gate valves shall be restrained by wedge action retainer glands or other approved manufacturer provided restraining systems. All gate valves shall open left with a non-rising stem (NRS) and be provided with a 2-inch square operating nut. All gate valves shall be constructed with triple o-ring seals in which 2 o-rings are located above the thrust collar and 1 o-ring is located below the thrust collar. The two upper o-rings shall be replaceable with the valve fully open and subjected to full rated working pressure.

The gate valve wedge shall be fully encapsulated in rubber. All valves shall be rated for bi-directional flow. All sealing gaskets shall be made of EPDM rubber materials.

Valves shall be Mueller or approved equal.

5. Gate Valves, 14-inches through 48-inches

   Gate valves 14-inches through 48-inches shall be resilient seated wedge gate valves in conformance with the requirements of AWWA C515, (reduced wall ductile iron body) and shall comply with all Specifications outlined for gate valves 6 through 12 inches. Gate valves installed vertically shall be provided with a minimum of 2-ft of overhead clearance between the top of the operator nut and the finished grade. All gate valves 18-inches and greater shall be provided with a geared actuator. Vertical gate valve installations shall have spur gear actuators and horizontal installations shall have bevel gears.

   Gate valves 18 inches in diameter shall be provided with a gear operator at a minimum 2:1 ratio and larger valves through 24-inches shall be provided with a gear operator at a minimum 3:1 ratio.

   Gate valves installed in a horizontal position shall only be provided as permitted by the Director of Water Resources for special circumstances where vertical alignment is not possible. All horizontal gate valves shall meet or exceed the Specifications outlined herein for vertical gate valves including the 250-psi pressure rating. All horizontal gate valves shall be equipped with bevel gears resulting in a minimum 4:1 turn ratio for valves 30 through 48-inches in diameter.

   Valves shall be Mueller or approved equal.

6. Butterfly Valves: Butterfly Valves shall not be used in the Town of Apex water system unless permitted by the Director of Water Resources in unique cases where a gate valve cannot be installed. All butterfly valves shall meet the requirements of AWWA C504 with mechanical joints, 2 inch open left operating nut. Valves greater than 12-inches shall be installed in a manhole with the 2-inch nut accessible from above grade. Valves designated by the Town to potentially have a remote actuator shall also be installed in a manhole regardless of size. All butterfly valves shall be rated for a working pressure of 200-psi or greater. Butterfly valves shall be provided with a fusion bonded epoxy coating on both interior and exterior surfaces at a minimum of 10-mils with an NSF 61 approved epoxy. All rubber seals and gaskets shall be made of EPDM rubber.

7. Insertion Valves: Insertion valves shall only be used as permitted by the Water Resources Department. Insertion valves shall meet the requirements of AWWA C515, seat on the valve body and be rated for a working pressure of 250-psi or greater. All insertion valves shall be made of ductile iron in conformance with ASTM A-536 Grade 65-45-12 and epoxy coated at a minimum of 10-mils. Insertion valves are available for pipe sizes through 12-inches in diameter. In cases where insertion valves are being installed to shut down water to a work zone area, the insertion valve shall be located a minimum of 100-ft from the work zone or greater as determined by the Engineer of Record to assure the insertion valve can safely

operate as a dead end without dislodging from the pipeline or otherwise causing the existing pipeline to shift.

8. Valve boxes

   a) Valve Boxes shall be cast iron, screw type, with a 5 inch opening and "water" stamped on the cover. The cover shall be 6-inches in depth. All valve box assemblies and covers shall be cast from Class 35 gray iron and domestically made and manufactured in the USA. Boxes shall be painted prior to shipment with a coat of protecting asphaltic paint.

   b) Valve box ring adjustments will not be allowed. The valve box shall be centered over the wrench nut and seated on compacted backfill without touching the valve assembly. All valve boxes in pavement shall be flush with the top of the pavement or flush with the finished grade. Outside of paved areas precast concrete valve box encasements or a trowel finished 2' x 2' x 6" pad of 3000-psi concrete may be used for valve box encasement provided the assembly is buried flush with the surface grade and compacted properly to prevent movement of the precast encasement.

9. Actuators: All valves shall be provided with standard 2-inch operating nuts. Unless otherwise specified, the direction of rotation to open the valves shall be to the left, (counterclockwise), when viewed from the top. Each valve body or actuator shall have cast thereon the word “OPEN” and an arrow indicating the direction to open.

## B. Appurtenances

1. Blowoffs:

   a) Blowoffs shall be the same size as the water main installed on and installed at the end of all dead-end water lines.

   b) Blowoff Assemblies shall be constructed as shown in the Details. The valves shall be gate type with a non-rising stem and a 2 inch operating nut, O-ring seals and screwed ends. A full size gate valve is required on water mains that are planned to be extended.

2. Reaction Blocking: Material for reaction blocking shall be 3000 psi concrete, poured in place. The reaction areas are shown in the Details. A minimum 6 mil plastic shall cover the fitting to ensure that no concrete will interfere with removal of the fitting. Blocking shall be installed in addition to pipe restraint. Blocking shall be installed against solid, undisturbed earth.

3. Rodding: All rodding shall be constructed with type 304 stainless steel rods at the number and sizing specified in the following table. Rod coupling shall not be allowed. All hardware shall also be stainless steel type 304.

Stainless Steel Rod Requirements are as follows:

| | |
|---|---|
| 6-inch branch | 2, ¾-inch stainless steel rods |
| 8-inch branch | 4, ¾-inch stainless steel rods |
| 12-inch branch | 6, ¾-inch stainless steel rods |
| 16-inch branch | 8, ¾-inch stainless steel rods |

4. Wedge Action Retainer Glands:
   All wedge action retainer glands shall be manufactured as a one piece retainer gland for use with mechanical joints and shall be rated to provide restraint up to 350-psi pressure rating for sizes through 16-inches. For sizing above 16-inches, the wedge action retainer gland shall be rated to provide restraint up to 250-psi. Approved wedge action retainer glands shall be made of ductile iron, coated with a manufacturer applied epoxy coating or polyester powder coating.

   In cases where wedge action retainer glands are approved for pipe restraint of fire hydrant supply lines or other applications, the entire hydrant supply line shall be restrained.

   Wedge action retainer gland connections to push on pipe are not approved.

5. Sampling Stations:

   Sampling Stations shall be provided at all new residential and commercial development areas at the rate of 1 sampling station per development complex consisting of at least 200-homes or 1- per 10 acre or greater commercial complex or 1 per institutional facility with more than 100,000 square feet or as otherwise required by the Director of Water Resources. Padlocks for sampling stations shall be provided by the Town of Apex Public Works Dept. The sampling station requirement may be waived in cases where area sampling is already deemed sufficient by the Town.

   Sampling stations shall be provided as a self-contained manufactured assembly with locking aluminum housing, copper drainage tube and unthreaded spigot.

6. Gaskets for Contaminated Installations

   a) Installation within contaminated areas should be avoided. If not possible or practical, and with prior approval from the Water Resources Director, water mains may be installed within some areas of contamination.

   b) The common type of gasket used for DIP is made of a synthetic rubber, which is a copolymer of styrene and butadiene (SBR). It is generally suitable for applications in fresh water, salt water and sanitary sewage environments. All

gaskets for DIP shall meet the minimum requirements of AWWA C111/A21.11. Gaskets for all PVC sewer pipes shall meet the requirements of ASTM F477.

c) Nitrile (NBR) or Buna-N gasket is another type of gasket made of synthetic rubber, which is a copolymer of butadiene and acrylonitrile. In general, this type of synthetic rubber has good resistance to refined petroleum products like gasoline, kerosene, jet fuel and lubricating oils. It may not be effective for use with aromatic hydrocarbons like benzene and toluene or chlorinated hydrocarbons like chloromethane and chlorobenzene.

7. Polyethylene Wrapping

When soils and/or field conditions require polyethylene wrapping of water mains, wrap shall be provided and installed in accordance with ANSI/AWWA C105/A21.5. When installed with restrained joint pipe, calculations for length of restrain must factor in the use of wrapping.

8. Marker Posts

Water main shall be marked with a plastic marker at every valve, every horizontal fitting, and spaced every 1,000 feet along the water main. The post shall having a minimum diameter of four inches and a minimum bury of thirty inches with a minimum of four feet exposed. The exposed portion shall be painted blue and label “Apex Water”. Marker posts shall be installed through easements, all non-residential areas, and as directed by the Water Resources Director. Valves shall have marker posts only when they are installed outside of paved areas.

## 604 Water Main Taps and Services

### A. Design

1. Individual water services shall be provided from the main to each water meter for single family residences in accordance with the Details. Gang meters are prohibited, with exception to installations at apartment buildings or multiple commercial units within a single building where metering individual dwelling units may be impractical. All connections shall be made by wet taps. Service connections shall be made perpendicular to the main and shall run straight to the meter. Any deviation from this standard must be approved by the Water Resources Director prior to implementing the change.

2. All water service lines shall be installed with a minimum depth of cover of 24-inches or greater.

3. All water meter boxes and vaults shall be located at the edge of the serviced lot’s right of way or easement. Water meter boxes shall not be placed in streets,

sidewalks, parking areas or obstructed by fencing or buildings. A 5-foot clear zone easement shall be maintained around meter boxes and vaults.

4. Provisions for backflow prevention shall be in accordance with existing Town standards and specifications as well as the NC Plumbing Code.

5. The water meter shall be sized based on water demand. All water service lines shall be minimum 3/4 inch diameter. Multiple branches up to a maximum of 2 potable water services per multiple branch assembly for a single residential use shall be sized by the Engineer of Record in accordance with AWWA M22, but shall not be less than 1.5-inches in diameter.

6. Service taps to new water lines shall be made by the Contractor/Developer in accordance with the Specifications after obtaining applicable permits and paying applicable fees.

7. No taps shall be made within 3-feet of the bell or spigot end of the pipe or within 20 feet of a dead end.

8. Water service supply lines shall be continuous from the water main to the meter, no connections or joints are allowed, for services up to and including 2-inch. No services shall be tapped on water transmission mains.

9. Multiple meters on branched services are acceptable for multi-family projects. Multiple meters and water services greater than ¾" in size used in gang meter installations shall require design calculations certified by a professional engineer licensed in North Carolina and submitted to the Town prior to construction approval.

   All multiple meter installations shall conform to the Standard Detail and shall contain a curb stop on the feeder line. The curb stop shall be buried and shall be equipped with a curb box.

10. Meter installation - The Town of Apex shall provide and install (¾" – 2") water meters subject to the following conditions:
    - The Town has received a copy of the waterline purity test results and the Engineer' certification.
    - The Developer (or property owner) has paid all acreage fees.
    - The Developer (or property owner) has paid prescribed meter fee.
    - The Developer has installed all specified improvements or guaranteed their installation as prescribed in the Town Code.

11. No services shall be made directly to water mains that are 12" or larger. These connections must utilize a cut-in tee and appropriate reducers/fittings.

12. Service connections larger than 2” shall be made by means of a tapping sleeve and valve or cut in tee.

13. All new water services shall be equipped with a dual check valve which shall be located immediately downstream of the meter.

14. All meters shall register in gallons.

15. Multiple meters may be installed in accordance with the Standard Detail.

16. Taps shall be made only on lines under pressure, and after mains have been tested and chlorinated. No taps on dry lines shall be allowed.

17. Taps shall be made in accordance with the Standard Detail and shall be a continuous run from the main line to the metering point without intermediate connections and/or joints.

18. Each service shall be flushed and disinfected after installation, abiding to the same requirements as water mains.

**B. Materials**

1. Full Body Tapping Sleeves: Mechanical Joint tapping sleeves shall be fabricated of ductile iron construction in a two-piece assembly with mechanical joint connections to the main line and flanged connection to the tapping valve. All MJ tapping sleeves shall be rated for a working pressure of 200-psi or greater and provided with a ¾-inch test plug for testing. All tapping sleeves shall be hydrostatically tested up to 200-psi before a tap is made. Tapping sleeves shall not be air tested.

   All mechanical joint tapping sleeves shall be manufacturer fabricated and approved for installation on the specific main line pipe material, whether ductile iron, plastic, cast iron or asbestos cement.

   Full body tapping sleeves must be used when the main line is greater than 24-inches. Tapping sleeves fabricated of carbon steel in a two-piece assembly with mechanical joint connections to the main line and flanged connection to the tapping valve will be considered for approval on a case by case basis for mains that are greater than 24-inches. Carbon steel sleeves should be rated for a working pressure of 250-psi or greater and be provided with a ¾-inch test plug. A fusion bonded epoxy coating shall be applied to all carbon steel sleeves.

2. Stainless Steel Tapping Sleeves, 6-inch through 12-inch main lines:
   Stainless steel tapping sleeves may be used in lieu of mechanical joint tapping sleeves for ductile iron or asbestos cement water mains through 12-inches in

diameter with branch sizing as shown in the following table. All stainless steel tapping sleeves shall be manufactured in conformance with AWWA C223. All stainless steel tapping sleeves shall have a stainless steel flange and be provided in a two piece assembly with a full circumferential gasket with tabbed gasket holding assembly and ¾-inch test plug. The back band shall be a minimum 14 gauge stainless steel and the front band (where the outlet is located) shall be a minimum 12 gauge stainless steel. The bolt bars shall be a minimum 7 gauge stainless steel. All stainless steel tapping sleeves shall be manufacturer rated for a working pressure of 200-psi or greater and hydrostatically tested to 200-psi before a tap is made. Stainless steel tapping sleeves shall not be air tested.

Stainless Steel Tapping Sleeve Sizes Allowed

| Nominal Main Size (inches) | Nominal Branch Size (inches) |
|---|---|
| 6 | 4 |
| 8 | 4 |
| 10 | 4 |
| 10 | 6 |
| 12 | 4 |
| 12 | 6 |
| 12 | 8 |

3. Stainless Steel Tapping Sleeves, 14-inch through 24-inch main lines:
   For larger diameter water mains, stainless steel tapping sleeves approved by the Town may be used in lieu of a mechanical joint tapping sleeve for cases where the branch line is 50% or less in diameter than the main line diameter. All of the previous Specifications described for tapping sleeves from 6 to 12 inches shall be met for stainless steel tapping sleeves for larger diameter water mains. Additionally, the outlet band for stainless steel tapping sleeves 14-inches through 24-inches shall be a minimum 7 gauge stainless steel. The back half of the sleeve shall be a minimum 12 gauge stainless steel.

4. Tapping Saddles, 14-inch through 24-inch main lines:
   Tapping Saddles may be used in lieu of mechanical joint tapping sleeves to tap mains 14 inches through 24-inches when the branch line is 50% or less in diameter than the main line diameter. Saddles shall be made of ductile iron providing a factor of safety of 2.5 with a working pressure of 250-psi. Saddles shall be equipped with an AWWA C110 flange connection on the branch. Sealing gaskets shall be O-ring type, high quality molded rubber having an approximate 70 durometer hardness, placed into a groove on the curved surface of the saddles. Straps shall be alloy steel. The minimum strap count for branch sizing from 4-12 inches is shown below.

Strap Requirements for Tapping Saddles

| Nominal Saddle Outlet (inches) | Number of Straps |
|---|---|
| 6 | 3 |
| 8 | 4 |
| 12 | 7 |

5. Corporation Stops:

   a) Corporation Stops shall be ball type, made of “no lead” brass (meeting UNS C89833 as per ASTM B584). Corp stops shall be complete with a compression coupling and AWWA Standard threads as per AWWA C800. Taps shall be located at 10:00 or 2:00 o'clock on the circumference of the pipe. Service taps shall be staggered alternating from one side of the water main to the other and at least 12 inches apart. The taps must be a minimum of 24 inches apart if they are on the same side of the pipe. All corporation stops shall be rated for a working pressure of 300-psi.

   b) No burned taps will be allowed and each corporation stop will be wrapped with Teflon tape for ductile iron pipe water mains. No taps are allowed on a fire hydrant line. No tapping shall be made where rodding is placed.

6. Service Saddles:
   Service Saddles shall be used for service taps larger than 1-inch on all ductile iron water mains 14-inches and greater, or when direct taps cannot be made. Service saddles shall also be used for all taps on existing water mains other than ductile iron, such as asbestos cement, PVC, etc. Service Saddles shall be provided with brass body and fasteners (85-5-5-5 waterworks brass or “no lead” brass meeting UNS C89833 as per ASTM B584) conforming to AWWA C800 and double straps made of silicon bronze conforming to ASTM A98 and factory installed grade 60 rubber gaskets. Service saddles shall be provided with AWWA standard threads per AWWA C800.

7. Copper Service Tubing: Copper service tubing shall be type K soft copper tubing per ASTM B88. No union shall be used in the installation of the service connection of 100-feet or less. Service lines more than 100 feet shall use a three (3) piece compression coupling. Only one (1) compression coupling shall be used for each 100 feet or fraction thereof.

8. Meter boxes for ¾ and 1 inch services: ¾ and 1-inch meter boxes shall behigh density polyethylene (black). Meter boxes shall provide a cover opening of at least 7.5 X 13 inches and boxes shall measure at least 18 inches in depth. Lids may be designed with an internal housing for the ERT device, or with mounting bracket.

They shall also be lockable. Lids shall be provided with a 2 inch (maximum) diameter hole to accommodate a transmitter. All meter boxes and lids shall be installed as shown in the Details and shall meet AASHTO HS20 load bearing capacity.

Meter boxes shall have 45 degree compression connections outside the box on the inlet side. There shall be a lockable ball valve inside the box on both the inlet and outlet which shall be permanently affixed to ensure proper spacing and alignment for the meter. Meter boxes shall also be provided with an ASSE 1024 approved inline, dual check valve located behind the meter. For boxes not utilizing a 1 inch meter, adapters shall be provided to accommodate a 5/8 x 3/4 inch meter. All fittings and connections shall be "no lead" brass conforming to UNS C89833 as per ASTM B584.

A "no lead" brass curb stop with compression connections shall be installed within 2 feet of the inlet connection. The curb stop may be buried without a box above it.

One 2 inch or 6 inch grade adjuster may be used when needed to meet final grade, however, no grade adjusters are permitted on new construction projects. Grade adjusters shall be cast iron. Grade adjuster and box shall be by the same manufacturer.

9. 1 ½ and 2 inch Water Services: 1 1/2" and 2" meter boxes shall be concrete or light weight polymer concrete as indicated in the Standard Details. Meter boxes for 1 ½ and 2 inch water services shall provide a cover opening of 24 X 36 inches and boxes shall measure at least 30-inches in depth and provided in straight wall arrangement. Standard meter box covers shall bolt down to the box, and all polymer cement covers shall be provided in solid configuration with a 2 inch diameter transmitter hole, and with the words, "Water Meter" cast into the lid. The meter box covers shall be provided with 2 stainless steel bolts in penta head configuration for security. To ensure positive discharge, the box should be tied into the existing storm drain system, or shall have an open bottom to allow drainage through a 6-inch stone base. All meter box covers for potable water service shall be provided in standard concrete gray or black color.

   Custom setter piping and fittings for 1 ½ and 2 inch water meters shall be constructed from "no lead" brass (meeting UNS C89833 as per ASTM B584) and copper tubing and shall be equipped with a lockable by-pass flanged ball valve and flanged angle meter ball valves All applications shall have a separate above ground backflow preventer.

10. Water services greater than 2-inches: Water services greater than 2-inches shall have the meter and bypass line located within a precast concrete vault. All piping and valves shall have flanged connections. There shall be isolation gate valves on both sides of the meter as well as one on the bypass line. Gate valves within the vault shall meet the above requirements of AWWA C509 for non-rising stem

gate valves, but shall be provided with hand wheel operators. A standard buried gate valve with 2-inch nut shall be provided between the main and the vault. Link seals shall be used where the pipe enters and exits the vault.

11. Meter Vaults: Meter vaults and access doors shall meet HS-20 loading requirements and shall be located outside of travel areas. Pedestrian rated covers shall not be used regardless of where they are located. The access double doors shall be aluminum with a flush drop lift handle, stainless steel hinges and bolts, a stainless steel slam lock, an automatic hold open arm, and compression springs to allow for easy opening. Vaults shall be approximately 9-feet by 12-feet. To ensure positive drainage, the vault shall be tied into the existing storm drainage system. If positive drainage is unobtainable, a sump pump shall be located and operated in the vault.

## 605 Irrigation Systems

1. All irrigation systems shall be provided with privately maintained lead free reduced pressure principle backflow prevention installed in accordance with the NC Plumbing Code and the Foundation for Cross Connection Control and Hydraulic Research. Reduced pressure zone backflow preventers shall be installed above ground in an insulated box as shown by the details.

2. All irrigation systems within public street right of way require an encroachment agreement from the Town or NCDOT prior to installation. Plans designating the location, size, material, and depth shall be submitted with the agreement application to the Inspection & Permits Department. If there is an approved site plan, it shall be referenced with the encroachment submittal to the State.

3. Pipe material for the mainline proposed to be used within the public right of way shall be Schedule 40 PVC or greater. A distance of at least 3-feet shall be provided from the back of curb or edge of asphalt in a ditch section. A minimum depth of 2-feet of cover shall be provided and all heads shall spray away from the street.

4. All street crossings of irrigation systems shall be encased in ductile iron or steel conduit. Irrigation systems installed in the medians of Town maintained roadways must also have French drains installed behind the curb and gutter which are piped to a storm system.

5. There shall be no interconnections between the Town's water system and any private water sources (wells).

## 606 Testing and Inspections

### A. General

1. All materials must be approved by the Infrastructure Inspector prior to installation. Materials rejected by the Infrastructure Inspector shall be immediately removed from the job site.

2. The Contractor shall furnish all materials, labor, and equipment to perform all testing and inspections to the satisfaction of the Infrastructure Inspector or Water Quality representative. The Town shall provide water for testing purposes on water mains in accordance with Town Standard Procedure 4, Control and Monitoring of Water System Flow Activity.

### B. Testing

1. Pigging of Water Mains

   a) All new water mains shall be pigged as a part of the testing procedure. Pigging shall take place at the conclusion of pipe installation utilizing the initial water fill or loading of the pipe. Pigging shall take place prior to any introduction of chlorine solution to the pipe. The Contractor shall use a 5 pounds/cubic foot density polyethylene pig and shall write their company name and the street name where the work is taking place in a permanent manor on the pig. A minimum velocity of 2 feet per second shall be maintained during pigging operations. In larger water mains, a swab may be utilized with prior approval from the Water Resources Director.

2. Hydrostatic Testing

   a) No valve in the Town water system shall be operated without authorization in accordance with the Town and by a Town employee. Advance notice of at least 24 hours shall be provided prior to testing. A section of line that is to be hydrostatically tested, shall be slowly filled with water at a rate which will allow complete evacuation of air from the line. Hand pumps shall not be used for the pressure testing of water mains. Taps used for testing purposes shall be removed after testing and repaired using a “no lead” brass plug.

   b) When filling the pipeline, it is very important to fill the line slowly to avoid undue impacts associated with surge and to allow air to evacuate the pipeline. After all air has been expelled from the water main, the line shall be tested to a pressure of 200 psi as measured at the lowest elevation of the line for a duration of 2 hours. The testing period shall not commence until all air has been evacuated and the pressure has stabilized. The pressure gauge used in the hydrostatic test shall be calibrated in increments of 20-psi or less. The pressure gauge shall be liquid-filled and indexed for an operating range of 300-psi or

less with a minimum dial size of 4 inches. At the end of the test period, the leakage shall be measured with an accurate water meter.

c) No leakage shall be allowed. If leakage is present, repair of the water main and additional testing shall be conducted until the standards are met.

d) Once testing and sampling have been completed, Contractor shall verify with Town that all valves have been opened.

3. Disinfection

a) All additions or replacements to the water system shall be disinfected with chlorine in conformance with AWWA C651 before being placed in service under the supervision of the Town's Infrastructure Inspector in the following manner:

1) Taps shall be made at the control valve at the upstream end of the line and at all extremities of the line including valves.

2) A solution of water containing 70% High Test Hypochlorite (HTH) available chlorine shall be introduced into the line by regulated pumping at the control-valve tap. The solution shall be of such a concentration that the line shall have a uniform concentration of not less than 50-ppm and not more than 100-ppm total chlorine immediately after chlorination. The chart below shows the required quantity of 70% HTH compound to be contained in solution in each 1000 feet section of line to produce the desired concentration from 50-ppm to 100 ppm.

Required Hypochlorite Concentration

| Pipe Size (inches) | Pounds of High Test Hypochlorite (70%) to reach 50-ppm *per 1,000 feet of line* | Pounds High Test Hypochlorite (70%) to reach 100-ppm *per 1000 feet of line* |
|---|---|---|
| 6 | 0.88 | 1.76 |
| 8 | 1.56 | 3.12 |
| 10 | 2.42 | 4.84 |
| 12 | 3.50 | 7.00 |
| 14 | 4.76 | 9.52 |
| 16 | 6.22 | 12.44 |
| 20 | 9.76 | 19.52 |
| 24 | 14.00 | 28.00 |
| 30 | 21.86 | 43.72 |
| 36 | 31.47 | 62.94 |
| 42 | 42.85 | 85.70 |

3) The HTH Solution shall be circulated in the main by opening the control valve and systematically manipulating hydrants and taps at the line extremities. The HTH solution must be pumped in at a constant rate for each discharge rate so a uniform concentration will be produced in mains.

4) HTH solution shall remain in lines for no less than 24 hours or as directed by the Town's Infrastructure Inspector.

5) Extreme care shall be exercised at all times to prevent the HTH solution from entering existing mains.

6) Free residual chlorine after 24 hours shall be at least 10 ppm or the Infrastructure Inspector will require that the lines be re-chlorinated.

4. Flushing

a) Flushing of lines may only proceed after 24 hours of disinfection contact time and as directed by Town staff, provided the free residual chlorine analysis is satisfactory.

b) At the completion of disinfection, chlorinated water flushed from the water main shall be disposed of in conformance with all Federal, State and local regulations.

c) In accordance with all applicable regulations, a neutralizing chemical shall be applied to minimize chlorine residual in the flushing water before discharging from the water main, unless an alternate plan is submitted in writing and approved by the Town.

d) Water used for disinfection shall be flushed from the water main until the chlorine residual concentration is below 5-ppm before initiating sampling.

5. Bacteriological and Turbidity Sampling

a) Bacteriological sampling shall be utilized to verify disinfection prior to placing a newly constructed water main in operational service. Bacteriological sampling shall consist of 2 consecutive sets of acceptable samples taken at least 24-hours apart and collected from each 1,200-ft section of water main and all dead ends and branches as outlined by ANSI/AWWA C651.

b) For the first round of sampling, the requested laboratory analysis shall be specified as follows: "Bacteriological Test and Turbidity." For the second round of testing, the laboratory analysis shall be specified as, "Bacteriological Test Only."

c) Samples for laboratory analysis shall be collected by the Town's Infrastructure Inspector after flushing is completed. The Contractor shall set up sampling stations and furnish the sample bottles, the testing agency and shall secure these samples. The Contractor shall make arrangements with the laboratory that all test results be submitted directly to the Town's Infrastructure Inspector or other designee approved by the Water Resources Department. All costs for laboratory testing shall be borne by the Contractor. Samples shall be taken at 2000 feet intervals, at the end of the main, at each branch connection, and each side of all cut-in connections.

d) The laboratory secured for testing shall be certified by the State Laboratory of Public Health. All sample bottles for bacteriological sampling provided by the laboratory shall be sterilized and treated with a dechlorinating agent, such as sodium thiosulfate. Samples for turbidity shall be taken in plain sterilized bottles from the lab, which are separate from the bottles provided for bacteriological testing. The sample bottles shall be provided with tamper proof seals that will be adhered to the bottles by the Town's Infrastructure Inspector. The Infrastructure Inspector shall provide a sample identification number, job title and an identification of Phase 1 or Phase 2 sampling that will be provided on the tamper proof custody seal. The bottles and tamper proof custody seals shall be accompanied by a chain of custody form provided by the certified laboratory conducting the testing. All sample identification numbers, job titles, and Phase 1 or Phase 2 testing identification from the custody seal shall be recorded on the chain of custody forms by the Infrastructure Inspector.

e) All samples shall be collected in compliance with the sampling protocols provided by the certified laboratory. The samples shall be kept in a cooler provided by the Contractor at approximately 40-degrees Fahrenheit or 4-degrees Celsius and delivered to the certified lab for testing as soon as possible. The time at which the sample is taken shall be recorded on the chain of custody form by the Infrastructure Inspector. Any samples processed at the laboratory more than 30-hours following collection shall be declared invalid, i.e. samples shall be submitted to the lab within 24-hours of collecting them.

f) All first round samples shall be tested for bacteriological quality and turbidity in accordance with standards established by NCDEQ and AWWA. If turbidity exceeds 1.0 NTU, the sample shall fail and the system shall be re-flushed before initiating a new round of testing.

g) If the phase 1 sample results for bacteriological quality and turbidity are acceptable, then a second set of samples can be collected at least 24-hours following the first sample collection. No additional flushing other than required to obtain a representative sample will be allowed prior to collecting the second set of samples.

h) The second set of samples shall be tested for bacteriological quality only. All custody seals and chain of custody forms shall identify the second round samples as “Phase 2” testing to notify the lab that the first set of samples have already been evaluated and received a satisfactory laboratory analysis.

i) At the completion of sampling, the total chlorine concentration shall be at least 2-mg/L and no higher than 4-mg/L before the system can be made operational.

j) If three successive test results are unsatisfactory, the Contractor shall immediately re-chlorinate lines and proceed with such measures as are necessary to properly disinfect the lines.

k) The new water system shall be valved off from the existing system until a satisfactory bacteriological laboratory analysis has been obtained and the Infrastructure Inspector has authorized the use of the new water system.

l) Water mains shall be placed into service within 72 hours of passing bacteriological analysis requirements. If no activity is anticipated on a water main after it is placed into service, the contractor shall notify the Town’s Operations Manager.

6. Tracer Wire and Marker Tape Testing

   Testing of the tracer wire and tape shall be performed by the Contractor at the completion of the project to assure they are all working properly. It is the Contractor’s responsibility to provide the necessary equipment to test the markers. Any defective, missing, or otherwise non-locatable units shall be replaced.

## 607 Repair and Abandonment

1. Joint leaks of Ductile Iron Pipe shall be repaired by using a bell joint leak repair clamp approved by the Town or otherwise replacing the damaged pipe and reconnecting with a mechanical joint sleeve connection.

2. Line Breaks or Punctures shall be repaired by a full circle repair clamp as approved by the Town or otherwise replacing the damaged pipe and reconnecting with a mechanical joint sleeve connection.

3. Line Splits or Blow Outs shall be repaired by replacing the damaged section with ductile iron pipe with a restrained sleeve connection at each end.

4. Asbestos Cement Pipe to PVC or Ductile Iron Pipe transitions shall use a Krausz Hymax or Romac Macro HP coupling with different end diameters sized specifically for the pipe materials and pipe outside diameter at each end.

5. All water main point repairs shall be replaced with DIP in accordance with these Specifications and backfilled with crush and run stone compacted to 95% maximum dry density as specified elsewhere in the Standard Specifications.

6. Water Service Line Repairs

   a) A water service line severed between the water main and the water meter shall be repaired using new type K copper tubing and bronze or “no lead” brass 3 piece compression unions.

   b) A corporation stop pulled out of a PVC pipe water main shall have a new service saddle and a new “no lead” brass corporation stop installed on the water main.

   c) A corporation stop pulled out of a ductile iron pipe shall have a full circle repair clamp placed over the old tap hole. A new tap shall be made and a new “no lead” brass corporation stop installed on the water main.

7. Abandonment of Existing Water Mains

   a) Existing water mains located outside of road sections shall be removed, unless otherwise directed by the Town. All materials and labor shall be provided by the contractor.

   b) Grout filling and abandoning in place may be allowed with prior approval from the Director of Water Resources.

# SECTION 700
# WASTEWATER COLLECTION SYSTEMS


**701 Gravity Sewers**
- **A. Design**
- **B. Materials**
- **C. Sewer Main Installation**

**702 Manholes**
- **A. Design**
- **B. Materials**
- **C. Installation**

**703 Service Connections**
- **A. Design**
- **B. Materials**
- **C. Installation**

**704 Testing and Inspections**
- **A. General**
- **B. Sewer Main and Service Connection Testing**
- **C. Manhole Testing**

**705 Aerial Crossings**
- **A. Design**
- **B. Pipe Materials**
- **C. Installation**

**706 Repairs, Modifications, and Abandonment**
- **A. Sewer Main Repairs**
- **B. Installation**
- **C. Draining Sewer Mains**
- **D. Abandonment of Existing Sewer Mains**

## 701 Gravity Sewer

### A. Design

1. Main Location

a) All public sanitary sewer mains shall be installed in dedicated street right of way or in dedicated utility easements. Mains within easements shall be centered within the easement. Mains located along NCDOT roads shall be placed outside of NCDOT right of way.

b) In preparing engineering design plans, all elevations shall be tied to NC grid system and the benchmark shall be described on the plans. A field survey of all waterways and waterbodies within project area must be performed, including but not limited to: creeks, streams, rivers, lakes, ponds, ditches, and culverts. Survey must include adequate points to accurately represent the cross section of the waterway/waterbody, i.e. top of bank, toe, centerline, etc.

c) Construction Drawings shall be prepared by or under the direct supervision of a professional engineer, licensed in North Carolina. Design shall conform to all standards and guidelines established by the Town and NCDEQ. Any design that does not meet minimum requirements set forth by NCDEQ and 15A NCAC 02T rules shall require a variance approval from NCDEQ. Plans shall indicate deflection angles at all manholes.

d) All private sewer collection mains inside the Town service area that will connect or are planning to discharge into the Apex sewer system shall comply with all Town of Apex design, siting and installation criteria outlined herein. The Owner of the private sewer collection system shall meet all State design requirements and obtain a State permit to operate the private system.

e) Gravity mains shall be installed in dedicated public right of way (not alleys or roundabouts) or in dedicated utility easements as follows:

| Pipe Depth* | Permanent Easement Width | Town Road R/W |
|---|---|---|
| 8-ft or less | 20-ft | Allowed |
| 8-ft – 15-ft | 30ft | As Specified by the WR Department |
| 15-ft – 20-ft | 40-ft | Not Allowed |
| Deeper than 20 ft | As Specified by the WR Department | Not Allowed |

*Depth of the sewer main shall be measured from the top of the pipe to the final grade or road subgrade at the deepest point between manholes.

Dedicated easements for sewer mains and appurtenances shall be recorded as “Town of Apex Public Sanitary Sewer Easement”. Town of Apex sewer easements shall contain only Town of Apex utilities unless otherwise approved by the site plan or an encroachment agreement. Sewer mains shall be centered in the easement. Easements shall be acquired by the Developer (unless utility is designed as part of a Capital Improvement Project) prior to construction approval.

Easements must be clearly labeled as “public” or “private”.

If the sewer main is located within the road right-of-way, a clear width equal to or greater than the easement width required must be available. If adequate width is not available within the right-of-way, additional easement outside of the right-of-way must be maintained. For example, if a sewer main normally requiring a 20 foot easement is installed 5 feet inside of the right-of-way, an additional 5 feet of easement must be obtained outside of the right-of-way to provide a clear total width of 10 feet on each side of the pipe.

f) The minimum width of a permanent easement that contains sanitary sewer and storm sewer shall be 30 feet. There must be a separation of 10 feet between the outside of each pipe and 10 feet from the centerline of the pipe to the easement line.

g) The minimum width of a permanent easement that contains sanitary sewer and greenway shall be 15 feet in addition to the width required in the table above. There must be a separation of 10 feet between the sewer main and the edge of pavement and at least 10 feet from the centerline of the pipe to the easement line.

h) No structures, equipment, retaining walls, embankments, impoundments, pavement, landscaping, fill, or other elements that would inhibit maintenance operations shall be constructed within a sewer main easement as outlined in Section 200. Fences may be allowed across easements provided that appropriate access gates or removable panels have been installed to allow utility maintenance. Fences shall not be installed parallel within utility easements. In all cases, Town of Apex Operations Staff shall have access to secured access gates. Fill or cut slopes are not allowed to extend into easements without full development plan approval or an approved encroachment agreement from the Town of Apex, see Section 200 for further information. All such pre-existing or planned conditions as noted herein that would impact operations and maintenance within the noted sewer main easement shall be noted and disclosed during the site plan approval process. Pre-existing conditions that are not disclosed during

the site plan review may nullify the approval and require relocating the sewer easement where there are no existing conflicts.

i) Where public sanitary sewer mains are installed within easements crossing private property, the Town's Water Resources Department shall have the right to enter upon the easement for purposes of inspecting, repairing, or replacing the sewer main and appurtenances. Where paved private streets, driveways, parking lots, etc. have been installed over public sewer mains, the Town of Apex shall not be responsible for the repair or replacement of pavement, curbing, landscaping, etc. which must be removed to facilitate repairs. The Water Resources Department shall excavate as necessary to make the repair, and shall backfill the disturbed area to approximately the original grade. Replacement of privately owned pavement, curbing, walkways, etc. shall be the responsibility of the property owner and/or Homeowner's Association.

j) Easements shall be accessible from public rights-of-ways. If easement is not accessible perpendicular from right-of-way due to steep slope, environmental feature, or other obstacle, additional easement may be necessary.

k) Sewer line easements shall be graded smooth, free from rocks, boulders, roots, stumps, and other debris, and seeded and mulched upon the completion of construction. Easements across sloped areas shall be graded uniformly across the slope to no steeper than a 4 to 1 ratio.

l) Mains paralleling a creek shall be of sufficient depth to allow lateral connections below the stream bed elevation. The top of the sewer main and laterals shall be at least three feet below the stream bed. Concrete encasement and ductile iron pipe shall be required when the cover between the top of the pipe and the stream bed is less than 3 feet.

m) Mains shall not be installed under any part of water impoundments or area to be impounded. Sewer mains shall not be installed through, above, or below any retained earth structure. Sewer main location and depth shall not be within the theoretical 1:1 slope of any impoundment dam or structure, or shall maintain a minimum of 10’ horizontal separation from the toe of slope, whichever is greater. The entire easement shall be outside of the toe of slope, unless prior approval is obtained from the Water Resources Director.

n) Sewer profile shall follow natural topography and road grade. Sewer designed against natural grade or road grade shall only be allowed if

approved by the Water Resources Director and no practical alternative is available.

o) The following minimum horizontal separations shall be maintained:

1. 100 feet from any private or public water supply source, including wells, WS-1 waters or Class I or Class II impounded reservoirs used as a source of drinking water (except as noted below)

2. 50 feet from wetlands and any waters (from normal high water) classified WS-II, WS-III, B, SA, ORW, HQW or SB (except as noted below)

3. 20 feet from any other stream, lake, or impoundment (except as noted below)

4. With approval directly from PERCS, the following separations may be acceptable when water main standards are implemented:

    a. All appurtenances shall be outside the 100 foot radius of wells.

    b. 50 feet from private wells (with no exceptions)

    c. 50 feet from public water wells (with no exceptions)

    d. Where the required minimum separations cannot be obtained, ductile iron pipe shall be used with joints equivalent to water main standards.

p) Sewer mains shall always be extended along any and all natural drainage courses/draws that are located within the property line boundaries of the proposed development. This sewer shall be extended to all adjacent upstream property lines.

    1) Sewer design shall account for future upstream development based on the current land use plan.

    2) Project shall include evaluation of existing downstream sewer capacity. <u>This evaluation shall address the capacity of all sewer collection and truck sewer systems that will be impacted downstream of the new development and/or redevelopment.</u> If any downstream sewer segments exceed 50 percent full, but are less than 65% full, the Town will evaluate and determine if upsizing is required. If any downstream sewer segments exceed 65 percent full, the

sewer main must be upsized or re-installed at a greater slope to allow for greater flow through the pipe. All improvements must be made the full length, from manhole to manhole.

3) The most upstream manhole shall be designed and located so that all upstream properties will have access to connect with future sewer mains. Depths shall be evaluated so that streams, roads, culverts, and any other features that must be crossed by future upstream sewer mains can do so and still achieve the required minimum cover on top of the sewer main.

q) Gravity sewer mains shall be deep enough to serve the adjoining properties and allow for sufficient slope in lateral lines. Gravity sewer pipe shall have the following minimum covers:

1) 3 feet from the top of pipe to finished subgrade in roadways.

2) 3 feet from the top of pipe to finished grade outside roadways.

r) Sewer mains that do not meet minimum cover stated above or the table in section A.1.e) are required to be ductile iron for the entire run between manholes. Steel casing and/or concrete may also be required for protection, at the direction of the Water Resources Director.

s) In all cases where fill material is added above existing sewer mains, the Engineer of Record shall prepare a structural analysis of the existing pipeline and determine if it is capable of supporting additional loading. If the additional fill material exceeds AWWA, DIPRA, UNIBELL and/or manufacturer standards for loading, the pipeline shall either be reinforced to adequately support the additional loading or replaced with a ductile iron pipe rated to support the added loading.

t) Separation Between Sanitary Sewer and Storm Water Pipes:
Sewer mains shall have a minimum vertical separation of 24 inches between storm pipes when the horizontal separation is 3 feet or less. Where sanitary and storm sewers cross with a vertical separation of less than 24 inches, the entire leg of sanitary sewer shall be made of standard ductile iron pipe with joints rated for water main service and the void space between the pipe crossing shall be backfilled with 3000-psi concrete or quick setting, minimum 500-psi, non-excavatable flowable fill that meets or exceeds NCDOT Specifications.

u) Separation Between Sanitary Sewer and Sewer Force Main:
There shall be a minimum 7 foot horizontal separation between parallel gravity and force mains when the depth of installation is 8-ft

or less. Otherwise, the minimum horizontal separation between pipelines shall be 10-ft up to 10-ft depth of installation.

v) Separation Between Sanitary Sewer and Water Main

1) Parallel Installations: 10-ft lateral separation (pipe edge to pipe edge) or minimum 5-ft lateral separation, and water line at least 18-inches above sanitary sewer line measured vertically from top of sewer pipeline to bottom edge of water main.

Crossings (Water Main Over Sewer): All water main crossings of sewer lines shall be constructed over the sewer line in conformance with Town of Apex Specifications. At a minimum, 18-inches of clearance shall be maintained between the bottom edge of the water main and the top edge of the sewer main. If 18-inches of clearance is not maintained, the water main and sanitary sewer main shall:

a. Both lines shall be constructed of ductile iron pipe with joints in conformance with water main construction standards.
b. The sanitary sewer pipe shall be ductile iron the entire run from manhole to manhole.
c. The void space between the pipes shall be filled with minimum 500-psi, quick setting non-excavatable flowable fill extending 3-ft on both sides of the crossing. Regardless of pipe material, at least 12-inches of vertical separation is required for sanitary sewer crossings of potable water mains.

2) Crossings (Water Main Under Sewer Line): Allowed only as approved by Town of Apex, when it is not possible to cross the water main above the sewer line. At a minimum, 18-inches of separation shall be maintained, (measured from pipe edge to pipe edge) and the sanitary sewer shall be constructed of ductile iron in conformance with water main construction standards the entire run from manhole to manhole. If local conditions prevent providing 18-inches of clearance, then at least 12-inches of clearance shall be provided and the void space between the pipes shall be filled with minimum 500-psi, quick setting, non-excavatable flowable fill extending at least 3-ft on both sides of the crossing.

w) Where concentrated sources of runoff (e.g., SCM discharge, FES discharge outlets, natural drainage ways, etc.) convey across existing or proposed Town of Apex Sanitary Sewer Easements, the applicant must design a rip rap lined channel across the full width of the easement.

2. Main Size, Slope and Design Criteria

a) Public gravity mains shall be a minimum of 8 inches in diameter.

b) Major interceptors shall be sized in accordance with the "Town of Apex Sewer Master Plan". In areas not included in the master plan, interceptors shall be designed based on the proposed land use (according to the Town's Comprehensive Growth Plan), using the following flow factors. At a minimum, all gravity sewer mains shall be designed and sized to serve the ultimate tributary buildout of the drainage basin.

Residential flow rates:

| **Land Use** | **Flow Factor** |
|---|---|
| Single Family Residential | 300 gpd per dwelling unit |
| Multi-Family Residential | 250 gpd per dwelling unit |

Non-residential flow rates:

Use flow factors as required by the North Carolina Department of Environmental Quality (at the time of this Specification revision, these flow rates are contained in 15A NCAC 02T .0114).

For all other flow rates not listed in Section ii above, use:

| **Land Use** | **Flow Factor** |
|---|---|
| Office and Institutional | 0.09 gpd/sq.ft bldg. space |
| Commercial | 0.12 gpd/sq.ft bldg. space |
| Industrial | 0.20 gpd/sq.ft bldg. space |

c) The ratio of peak to average daily flow shall be 2.5.

d) Sanitary sewers shall be designed to carry the projected average daily flow at no more than 1/2 full. The minimum velocity for sanitary sewer lines shall be 2.5-fps.

e) Sanitary sewers shall be sized based on the Manning's Equation with Manning's roughness coefficient "n" = 0.013 or greater. Pipe diameter sizes used in the calculation of Manning's Equation shall be nominal pipe sizes.

f) The minimum grades for public sanitary sewers shall be as follows:

Minimum Slopes for Gravity Sewer Mains

| Main Size *(diameter in inches)* | Minimum Slope V=2.5ft/s, depth 1/2 full *(feet per 100 feet)* *{standard required velocity}* |
|---|---|
| 8 | 0.52 |
| 10 | 0.39 |
| 12 | 0.30 |
| 14 | 0.25 |
| 15 | 0.23 |
| 16 | 0.21 |
| 18 | 0.18 |
| 21 | 0.15 |
| 24 | 0.12 |
| 27 | 0.11 |
| 30 | 0.09 |
| 36 | 0.07 |
| 42 | 0.06 |
| 48 | 0.05 |

Note1: All minimum slopes based on Manning's Equation
Note2: Manning's coefficient n = 0.013 used for all computations

g) The minimum grade for the uppermost reach of a sanitary sewer line shall be 1% regardless of sewer line size.

h) The maximum grade for sanitary sewers is 10%. The maximum velocity in sanitary sewers is 15 ft/sec. These limits may only be exceeded with the approval of the Director of Water Resources and the incorporation of the following provisions, which apply to all sewers either designed or installed at grades equal to or exceeding 10%:

1) All sewers with a grade of 10% or higher must have the downstream run of pipe installed with ductile iron pipe.

2) High velocity manholes shall be used on all sewers with a grade of 10% or higher. High velocity lines cannot tie directly to an existing line and must proceed 180$^{o}$ through the invert into the downstream line.

3) Concrete thrust collars shall be installed on all sewers designed at grades of 10% or higher. The anchors shall be installed at the following spacing:

   a. Not over 36' center to center on grades from 10% to 25%
   b. Not over 24' center to center on grades from 25% to 40%
   c. Not over 16' center to center on grades exceeding 40%

4) The Town reserves the right to require all high velocity requirements outlined herein for sewer lines either designed or installed at grades of 10% or greater, regardless of the flow velocity. In cases where the design grade established on the sewer design plan is exceeded during construction and the 10% threshold is exceeded, all high velocity requirements shall apply without waiver.

i) Sewer extensions shall be designed for projected flows, even when the diameter of the receiving sewer is less than the diameter of the proposed extension.

j) All pipe diameter changes shall occur only in manholes, with the invert of the larger pipe lowered sufficiently to maintain the same energy gradient. An approximate method of obtaining this result is to place the crown of the incoming pipes may be designed for an elevation at or above the crown of the outgoing pipe.

k) All transitions of pipe material, pipe separations, grade changes, pipe thicknesses and all angular deflection changes shall occur only at manholes.

l) Pipe trench excavation and backfilling shall be performed in accordance with Section 0450 of these Specifications.

m) Gravity sewer downstream from a connection point with a force main shall be lined with 401-type ceramic epoxy for a minimum of 1,200 linear feet.

n) The minimum angle between inlet and outlet pipes in a manhole shall be 90 degrees.

## B. Materials

Materials specified herein are acceptable for sewer service as described. Sanitary sewer mains shall conform to the following criteria:

| Diameter (in) | Depth (ft)* | Material |
|---|---|---|
| Any | ≤ 4 | DIP |
| 8 – 15 | 4 ≤ 13 | PVC SDR 35 or C900 DR 18 |
| 8 – 15 | 13 < D ≤ 16 | PVC C900 DR 18 or DIP |
| > 15 | Any | DIP |
| Any | > 16 | DIP |

*Depth of the sewer main shall be measured from the top of the pipe to the final grade or road subgrade at the deepest point between manholes.

1. Ductile Iron Pipe

Material Specifications

Ductile Iron Pipe shall be designed and manufactured in accordance with AWWA C150 and C151 and provided in nominal 20-ft lengths. The minimum requirements for ductile iron pipe and required laying conditions are tabulated below. For all other installations other than specified, the laying condition, bedding requirements or the minimum pressure class rating and/or thickness class shall be increased in accordance with AWWA C151. A pipe thickness design shall be submitted for external loading in all cases where the pipe depth exceeds the specified range of depths outlined in the following table.

Pressure Class, Max. Depth and Laying Condition for DIP Sewer Mains

| Pipe Diameter | AWWA C-150, Laying Condition | Pressure Class | Maximum Depth of Cover |
|---|---|---|---|
| 8 -inch | type 1 | 350 psi | 3-16 feet |
| 8 -inch | type 4 | 350 psi | > 16 feet |
| 10-12 -inch | type 1 | 350 psi | 3-16 feet |
| 10-12 -inch | type 4 | 350 psi | 16-20 feet |
| 10-12 -inch | type 5 | 350 psi | > 20 feet |
| 14-20 -inch | type 4 | 250 psi | 3-20 feet |
| 14-20 -inch | type 5 | 250 psi | > 20 feet |
| 14-20 -inch | type 5 | 350 psi | As Directed |
| 24-30 -inch | type 4 | 250 psi | 3-20 feet |
| 24-30 -inch | type 5 | 300 psi | > 20 feet |
| 24-30 -inch | type 5 | 350 psi | As Directed |
| 36-42 -inch | type 4 | 300 psi | 3-20 feet |
| 36-42 -inch | type 5 | 350 psi | > 20 feet |

Note: For cases not specified, a ductile iron pipe and bedding design certified by a Professional Engineer licensed in the State of North Carolina shall be required in compliance with AWWA C150 and the Ductile Iron Pipe Research Association.

In cases where thickness class designation of ductile iron pipe is specified, the corresponding thickness class designations are as outlined in the following table.

The following table lists approved manufacturers of DIP and DIP fittings that are allowable for installation within the Town's system.

| Product Category | Approved Manufacturer | Model/Series | Pressure/Load Rating | Reference Standard | Requirements |
|---|---|---|---|---|---|
| Ductile Iron Pipe 8-inch & 10-inch Diameter (and 4-inch and 6-inch services) Cement Mortar Lined | US Pipe | Tyton Joint | 350 psi | AWWA C150 and C151 | Cement mortar lined with exterior bituminous coating. McWane pipe stamped "McWane by Atlantic States or Clow" only |
| | American (ACIPCO) | Fastite Joint | | | |
| | McWane | Tyton Joint | | | |
| Ductile Iron Pipe 12-inch and Larger Diameter Protecto 401 Lined | US Pipe | Tyton Joint | 250-350 psi | AWWA and DIPRA Standards | 40-mils of Protecto 401 Lining (lining must be less than 1 year old); McWane pipe stamped "McWane by Atlantic States or Clow" only |
| | American (ACIPCO) | Fastite Joint | | | |
| | McWane | Tyton Joint | | | |
| Ductile Iron Fittings 8-inch & 10-inch Diameter (and 4-inch and 6-inch services) Cement Mortar Lined | Sigma | Mech. Joint | 350 psi | AWWA C110/C111 and AWWA C153 | Shall always meet or exceed pipe pressure rating |
| | Tyler Union | Mech. Joint | | | |
| | SIP Industries | Mech. Joint | | | |
| | Star | Mech. Joint | | | |
| | American | Mech. Joint | | | |
| Ductile Iron Fittings 12-inch and Larger Diameter Protecto 401 Lined | Sigma | Mech. Joint | 250-350 psi | AWWA and DIPRA Standards | Shall always receive interior Protecto 401 Lining to meet or exceed main line pipe standards. (401 lining must be < 1yr old) |
| | Tyler Union | Mech. Joint | | | |
| | SIP Industries | Mech. Joint | | | |
| | Star | Mech. Joint | | | |
| | American | Mech. Joint | | | |

**Ductile Iron Pipe Thickness Class**

| Pipe Diameter | Pressure Class | Nominal Thickness (inches) | Minimum Corresponding Thickness Class |
|---|---|---|---|
| 8 | 350 | 0.25 | 50 |
| 10 | 350 | 0.26 | 50 |
| 12 | 350 | 0.28 | 50 |
| 14 | 250 | 0.28 | 50 |
| 16 | 250 | 0.30 | 50 |
| 18 | 250 | 0.31 | 50 |
| 20 | 250 | 0.33 | 50 |
| 24 | 250 | 0.37 | 50 |
| 24 | 300 | 0.40 | 51 |
| 30 | 250 | 0.42 | 51 |
| 30 | 300 | 0.45 | 52 |
| 36 | 300 | 0.51 | 52 |
| 36 | 350 | 0.56 | 53 |
| 42 | 300 | 0.57 | 52 |
| 42 | 350 | 0.63 | 53 |

Pipe joints shall be of the push-on type as per AWWA C111.

For 10-inch diameter and smaller gravity sewer mains, pipe lining shall be cement mortar with a seal coat of bituminous material, all in accordance with AWWA C104.

For 12-inch diameter and larger gravity sewer mains, all ductile iron pipe and fittings for sewer construction shall receive an interior ceramic epoxy coating, consisting of an amine cured novalac epoxy containing at least 20% by volume of ceramic quartz pigment, as manufactured by Protecto 401. The interior coating shall be applied at a nominal dry film interior thickness of 40-mils. All DIP bells and spigots shall be lined with 8-mils of joint compound by Protecto 401 or approved equal applied by brush to ensure full coverage. All pipe supplied with Protecto 401 interior lining shall be provided free of holidays. Pipe installed with defects in the lining will be rejected and required to be replaced. Patching of Protecto 401 coating defects after installation shall not be approved. Protecto 401 lined pipe must be installed within one year of the application date on the pipe.

All buried DIP and fittings shall have bituminous coating on the exterior surface in accordance with AWWA C151/ANSI A21.51. The seal coat

shall be a coal tar epoxy lining and shall be Indurall Coating, Inc. “Ruff-Stuff”, Kopper’s Company, Inc. “Bitumastic No. 300-M” or approved equal. Pipe shall be supplied in minimum 20-ft lengths.

All ductile iron pipes shall be marked in conformance with ASTM A-746.

Pipe material and manufacturer must have a supplier within 200 miles of the Town of Apex.

2. Solid Wall PVC Pipe

Material Specifications

PVC Pipe shall be solid wall and made of PVC plastic having a cell classification of 12454 or 12364 (with minimum tensile modulus of 400,000 psi) as defined in Specification D1784. PVC pipe shall have integral wall bell and spigot joints for the conveyance of domestic sewage and shall be supplied in 20 ft lengths. Fittings shall be made of PVC plastic having a cell classification of 12454-B, as defined in ASTM D1784.

All PVC gravity sewer pipe and PVC fittings up to 15-inches in diameter shall be manufactured in accordance with the latest version of ASTM D3034. All solid wall PVC pipe installed at diameters from 18-inches to 27-inches in diameter shall be manufactured in conformance with ASTM F679 and provided at minimum pipe stiffness of 115-psi. Fittings must be manufactured by pipe supplier or approved equal, and have bell and/or spigot configurations compatible with that of the pipe. PVC pipe shall be installed in accordance with the requirements of this Specifications manual and ASTM D2321.

All PVC pipe up to and including 15 inches in diameter shall have a maximum Standard Dimension Ratio (SDR) of 35 for depth of installation no shallower than 4-ft of cover from the pipe crown and no deeper than 13-ft measured from the bottom of the pipe. All solid wall PVC pipe for depth of installation greater than 13-ft shallbe C900 DR18. Solid wall PVC pipe shall not be approved for depths of installation greater than 20-ft. All solid wall PVC pipe shall be marked and certified in conformance with ASTM D3034 or ASTM F679 and all AWWA standards.

## C. Sewer Main Installation

1. General Requirements

a) Pipe trench excavation and backfilling shall be performed in accordance with Section 0450 of these Specifications.

b) Transitions of pipe material, pipe separations, grade changes and all angular deflection changes shall occur only at manholes. Pipe crowns shall be matched for changes in pipe sizes.

c) All sewer mains installed with less than 4 ft of cover or deeper than 20-ft shall be ductile iron pipe.

d) Pipe and fitting interiors shall be protected from foreign matter and shall be inspected for damage and defects prior to installation. In the event foreign matter is present in pipe and fittings, it shall be removed before installation. Open ends of pipe shall be covered and protected when pipe laying is not in progress to prevent debris from entering the pipe.

e) Pipe shall be laid on true lines as directed by the Engineer. Trenches shall be sufficiently wide to adjust the alignment. Bell holes shall be dug at each joint to permit proper joint assembly. The pipe shall be laid and adjusted so that the alignment with the next succeeding joint will be centered in the joint and the entire pipeline will be in continuous alignment both horizontally and vertically. Pipe joints shall be fitted so that a thoroughly watertight joint will result. All joints will be made in conformance with the manufacturer's recommendations for the type of joint selected.

f) Prior to beginning construction, the Contractor shall contact local utility companies and verify the location of existing utilities. The Contractor shall be completely and solely responsible for locating all existing buried utilities inside the construction zone before beginning excavation. The Contractor shall be solely responsible for scheduling and coordinating the utility location work. When an existing utility is in conflict with construction, it shall be exposed prior to beginning construction to prevent damage to the existing utility.

g) No bells or connections shall be within any waterway crossing area.

h) Sewer mains shall not be installed within roundabouts.

## 702 Manholes

### A. Design

1. Manhole Location, Siting and Design

a) Manholes shall be spaced at a maximum distance of 400 feet.

b) Manholes shall be installed at each deflection of line and/or grade. The flow channel through manholes shall have a uniform and smooth finish free of irregularities or obstructions. The invert channel shall conform to the shape and slope of the entering/exiting sewer line. Either pre-cast or brick and mortar inverts may be used. Mortar shall be mixed in a clean, tight mortar box, or in an approved mechanical mixer and used within 45 minutes of mixing.

c) A minimum drop of 0.2 feet must be maintained between the invert into and out of the manhole. The benches shall be sloped so as to prevent sedimentation. The inverts from intercepted cross lines shall be tied into the main flow line wherever possible, so as to provide a smooth transition. Wherever such cross lines tie-in at a substantially higher elevation than that of the downstream invert, the connecting line shall extend into the manhole a sufficient distance to enable the flow to spill into the flow line rather than onto the invert bench.

d) On dead-end manholes receiving service connections, the invert must be constructed and the invert flow line shall extend through the manhole so that all flow entering the manhole shall be readily conveyed downstream.

e) Free falls of wastewater flow into the manhole invert from incoming sewer mains shall not be allowed, except under limited circumstances.

f) In certain isolated circumstances standard free drops may be allowed, not exceeding 24-inches, when pipe diameter changes occur at a manhole. In these cases, the smaller diameter pipe crown shall be positioned no higher than the larger diameter pipe crown to limit the drop. When free drops are necessary due to pipe size changes, the Contractor shall take preventive measures to prevent free drops into the manhole invert, such as building a flume or trough up to the incoming invert, or piping the flow to the primary invert flow channel.

g) Drop manholes are not allowed without the written approval of the Water Resources Department. While certain physical constraints may dictate the need for drop manholes, they may not be used merely to decrease

trenching depth. Upstream slope changes shall be used to avoid the need for drop manholes.

h) Manholes shall not be obstructed from view or access. It is illegal to bury or obstruct access to manholes. Manholes shall not be installed within roundabouts.

i) Manhole covers shall be elevated as follows:

1) Roadways: Manholes installed in roadways and road shoulders shall be installed with the cover flush with the top of pavement.

2) Outside of Roadways: Manholes installed outside of roadways shall be elevated at least 12 inches above the surface grade and/or at the same elevation of the road travel lane unless otherwise approved by the Water Resources Director.

3) Wooded Outfalls: All manholes installed in wooded, forested or brushy areas shall be elevated at least 24 inches above the surface elevation.

4) 100-Year Flood Zone: All manholes located within the 100-year flood elevation shall be elevated at least 24 inches above the 100-year flood elevation or specify watertight covers and vents that extend at least 24 inches above the 100-year flood elevation.

5) 100-Year Culvert Headwater Depth: All manholes located within a 100-year culvert headwater staging area shall be elevated at least 24 inches above the 100-year flood elevation or specify watertight covers and vents that extend at least 24 inches above the 100-year flood elevation.

6) Well Maintained Areas: All manholes installed in well maintained areas, such as yards, sidewalks or otherwise inside an improved right-of-way shall be installed flush with the finished surface.

j) Manholes used in outfalls and other non-traffic bearing areas shall be constructed with a flat top and outside steps.

k) Manholes shall be provided without interior steps.

l) When connecting a new sewer main to an existing main, the connection shall be established with a “Doghouse” type of manhole inserted over the existing main. Doghouse manholes shall only be installed on existing DIP or PVC mains.

m) Grade rings shall not exceed 6 inches.

2. Manhole Sizing

a) Manholes shall be sized as shown in the following table. The next larger size shall be required if the pipe size, depth, or number of main line connections warrants a larger size. In consideration of main line connections, all will be considered regardless of type, whether inside drop, outside drop, force main or standard connection.

Manhole Sizing Guide

| **Manhole Size** | **Maximum Allowable Pipe Size, Single In** | **Maximum Allowable Pipe Size, Multiple In** | **Maximum Depth with Extended Base** |
|---|---|---|---|
| *(diameter)* | *(diameter)* | *(diameter)* | *(invert to rim)* |
| 4-ft | 8-12 inches | | 12-ft[1] |
| 5-ft[4] | 14-24 inches | 8-12 inches | 12-ft to 18-ft |
| 6-ft[4] | 30-36 inches | 14-24 inches | 18-ft to 24-ft |
| 8-ft[4] | ≥42 inches | 30-36 inches | 24-ft to 30-ft |
| 10-ft[4] | | ≥42 inches | >30-ft |

*[1]Depths beyond 14-ft in roadways shall require a 5-ft diameter manhole with extended base.*
*[4]Due to the limited manhole wall area that could exist between the invert in and out, some manholes may require upsizing as directed by the Water Resources Department.*

All manholes 5-ft in diameter shall be extended to surface elevation with no further reduction in diameter until the eccentric cone section.

Manhole transitions for 6-ft and larger diameter manholes are only allowed in the top 5-ft of the manhole. In no case shall the smallest barrel size be less than 5-ft diameter. At least 5-ft of vertical clearance shall be maintained above the pipe crown before transitioning to a smaller diameter riser, or transition shall not be utilized. An eccentric flat slab reducer from 6-ft diameter or larger manhole base sections to 5-ft diameter risers (non-paved areas) or eccentric cones (paved areas) shall be used to make any transition.

Manholes outside of paved areas that are 6-ft in diameter and greater and are too shallow to maintain 5-ft of vertical clearance above the crown of the pipe shall maintain the full manhole diameter up to the design surface elevation and be provided with a flat top slab cover with eccentric hole.

Manholes inside of paved areas that are 6-ft in diameter and greater shall be constructed with an eccentric, flat top reducer to 5-ft diameter and provided with a 5-ft diameter eccentric, tapered cone at the finished grade.

When the depth of the manhole is too shallow to maintain 5-ft of vertical clearance above the crown of the pipe a 3-ft tall eccentric, tapered cone shall be used without any additional 5-ft diameter risers.

## B. Materials

1. Concrete Manholes

a) Manholes shall be precast concrete with a minimum compressive strength of 4000-psi and utilize minimum grade 60 rebar in compliance with ASTM C478. All 4-ft and 5-ft diameter manholes and all 6-ft diameter manholes in paved areas shall be provided with eccentric cone sections. Flat top manholes are required in outfall areas and for 6-ft and larger diameter manholes.

b) Precast concrete manholes shall meet all design and manufacturing requirements of ASTM C478 and all H-20 loading requirements. Minimum wall thickness shall be 5-inches and shall increase with depth and diameter in accordance with ASTM standards. The standard joint shall be sealed with a plastic cement putty meeting Federal Specification SS-S-00210, such as Ram-Nek or a butyl rubber sealant. All lift holes must be plugged with non-shrinking grout after installation.

c) All manholes greater than 5-ft diameter shall have minimum 8-inch (6-inch for 4-ft diameter manholes), 4,000-psi concrete bottoms resting on a minimum of 12 inches of #57 stone. Sewer mains shall enter and exit radially through the manhole. Inverts shall be constructed with a width equal to the effluent pipe and a height equal to 1/2 that of the effluent pipe. Inverts shall be so finished with sufficient drop across the manhole to compensate for all resulting energy loss across the invert. Flat invert channels shall not be allowed. At each inlet and outlet of 8 inches or greater, resilient connectors or manhole boots shall be provided in conformance with ASTM C923. Rings and clamps are to meet standards of ASTM A167 and/or ASTM C923.

d) Precast manhole components shall not be installed, transported, or removed from the casting yard prior to reaching the minimum compressive strength of 4,000-psi and at least 7 days have elapsed since casting.

e) Manhole flat slab, eccentric reducers provided for 6-ft diameter and larger manholes shall be provided with minimum slab thickness of 12-inches. Flat slab, eccentric reducers shall not be allowed for manhole diameters less than 6-ft.

f) Manhole flat top slab covers for outfall manholes 6-ft diameter and greater shall be designed and manufactured for H-20 loading and provided in minimum slab thickness of 8-inches. Manhole flat top covers shall be provided with a minimum clear opening of 36-inches when utilized with a 36-inch clear span manhole frame and cover.

g) Manhole benches shall slope upwards from the spring line of the pipe to the projected level of the pipe crown at the manhole wall, or 8-inches above the spring line, whichever is less. Bowl type inverts recessed inside of precast benches shall not be accepted.

2. Manhole Frame and Cover Materials

a) Manhole Frames and Covers shall be Class 35 gray iron with "Sanitary Sewer" and the Town symbol forged into the cover as indicated in the details. Ring and cover shall be stamped with make and model. All manhole frames and covers shall be domestically made and manufactured in the USA from domestic iron.

b) Types

1) Manhole Frames and Covers in Paved Areas and some Unpaved Areas: For all installations in roadways or within the right of way, use Type 1 ring and cover, and place sufficient depth of concrete below the pavement around the ring to ensure contact with manhole. Type 1 covers shall be provided with 1 vent hole. Type 1 covers shall be designed for a proof load of 40,000 lbs. and be provided in Class 35B gray iron in conformance with ASTM A48. At a minimum, Type 1 manhole rings shall weigh 190 lbs. and the cover shall weigh 120 lbs.

2) Manhole Frames and Covers for Outfalls: For installation in outfall areas, with 4-ft and 5-ft diameter manholes use Type 2 ring and covers. Type 2 covers shall not be installed in areas subject to traffic loading. Type 2 covers shall be provided with an integrated frame and cover assembly in which the cover rotates away from the frame for access. The rotating assembly shall be provided with a cast in stainless steel rod assembly. Type 2 covers shall be provided with a minimum 24-inch clear span opening along the axis with the stainless steel rod assembly. Security shall be provided by 3 exterior cast lugs at ¾-inch thickness that allow padlock installation or bolting with 3 stainless steel bolts with stainless steel zinc plated nuts. Type 2 covers shall be made of Class 35B iron in conformance with ASTM A48 and designed for a proof load of 12,000 lbs. The frame and cover weight shall not be less than 60-lbs for the cover and 80-lbs for

the ring. The Type 2 frame and cover assembly shall be provided with a gasket that makes the cover assembly watertight when bolted at all three lugs. Type 2 covers shall be provided inside the 100-year flood elevation or other areas subject to flooding.

c) All castings shall be machined to give even and continuous bearing on the full length of the frame. Castings shall be free of porosity and blow holes. All manhole frames shall be bolted to the manhole, except in paved streets.

d) Manhole ring and cover shall be made by East Jordan Iron Works, US Foundry, Neenah Foundry Company, or approved equal.

e) Where deemed necessary in low areas of streets, solid manhole covers may be required to prevent surface water inflow into the sewer.

## C. Installation

1. General Requirements

a) The downstream side of the last manhole(s) of a sanitary sewer line extension under construction shall be plugged by constructing a brick/block wall to prevent the passage of groundwater, runoff and sediment into the sanitary sewer system. All water upstream of the wall shall be pumped out of the sanitary sewer line and all sediment and solids shall be removed and properly disposed of by the Contractor. Water, sediment, and solids shall be removed every 30 days, or sooner if necessary, for the duration of the project. The wall shall not be removed until the line has been inspected by the Town to ensure that all possible points of inflow or infiltration have been eliminated. Failure to meet these requirements will be deemed a violation with fines up to $1,000.00 per day.

b) Manholes shall not be buried or hidden, which is a violation and subject to penalty by fines.

c) All manhole penetrations, whether sewer main or service lateral, shall be cored with a concrete coring machine. All pipe connections must be made with flexible watertight couplings or boots.

For new manholes, there shall be a minimum of 9-inches or ½ the pipe outside diameter (OD), whichever is greater, between the pipe hole openings. (Pipe hole opening is typically 4” greater than the pipe OD.) When the adjacent pipes are different sizes, the OD of the smaller pipe shall be used to determine the spacing requirement, but shall never be less than 9-inches.

For connections to existing manholes, there shall be a minimum of 9-inches or 3.5-inches plus ½ the OD of the existing pipe, whichever is greater, between the pipe hole openings.

d) All manhole sections shall be standard tongue and groove with rubber "O" ring or butyl rope sealant. All external manhole joints shall be wrapped with an approved joint seal material.

e) Each connection to a manhole shall be sealed watertight by means of a flexible sleeve or gasket type sealing system. The flexible sleeve type system, if used, shall be equal to Flexible Manhole Sleeve as manufactured by the Interpace Corporation. The gasket type system, if used, shall be equal to the PSX system as manufactured by the Press Seal Gasket Corporation. The sealing system shall be furnished by the manhole manufacturer.

f) Manholes shall be set on a base of 57 stone that is a minimum of eight (8) inches thick for four (4) foot diameter manholes and twelve (12) inches for five (5) foot diameter.

g) Backfill around manholes shall be placed uniformly in shallow layers and thoroughly compacted with mechanical tampers and with care taken to ensure against displacement of the structure.

h) All manhole rings shall be set in full mortar beds and bolted down. The rings with covers shall be set to the final grade indicated on the plans or as may be directed by the Town. Any rings and covers not conforming to the correct grade shall be adjusted by the Contractor as required. The exterior surface of all manholes shall be thoroughly cleaned of all grease, dirt, etc. All lifting lugs shall be removed and holes patched thoroughly with non-shrink mortar, color to match that of the manhole where such patches are exposed.

2. <u>Manholes Subject to Inundation</u>

a) Manholes subject to flooding shall be watertight and vented 24 inches above the 100-YR flood elevation. In flood prone areas, the manholes shall be vented at least every 1000-ft or every other manhole, whichever is greater.

b) The exterior of all manholes within the 100-year flood elevation and in wetland areas shall receive an exterior coating of an approved bitumastic coal tar epoxy or an approved epoxy coating at 40-mils to prevent weepage or attack by acidic soils. Individual joints shall be

wrapped with Conwrap, Conseal, or approved equal and approved by the Town prior to backfilling.

c) Anti-flotation design measures shall be implemented as required in flood prone areas.

3. Manholes Located on Large Collection Mains

The Town reserves the right to require all manholes located on interceptor or outfall mains 24-inches in diameter and larger to have the manhole interior and bench coated with an approved epoxy coating at 80-mils thickness. The epoxy coating shall be field applied and tested as described herein.

4. Force Main Discharge Manholes

All manholes located on gravity mains that serve or will serve as discharge points for sanitary sewer force mains shall receive an interior epoxy coating at 80-mils thickness. In addition to the receiver manhole, the Town reserves the right to require epoxy coating of the next two consecutive manholes downstream of the receiver manhole or all downstream manholes within 1200-lf of the receiver manhole,—See Section 800 for further information on force main discharge manholes.

5. Epoxy Coating

a) Surface Preparation: Concrete manholes must be well cured prior to application of the protective epoxy coating. Generally, 28 days is adequate cure time for standard Portland cement. If earlier application is desired, compressive or tensile strength of the concrete can be tested to determine if acceptable cure has occurred. (Note: Bond strength of the coating to the concrete surface is generally limited to the tensile strength of the concrete itself. An Elcometer pull test to determine suitability of concrete for coating may be required).

Surface preparation shall be based on the requirements of the manufacturer of the epoxy coating and applicable NACE International standards.

b) Installation: A minimum 80-mils thickness shall be field applied to new manholes (120-mils for existing manholes). During application a wet film thickness gage, meeting ASTM D4414 - Standard Practice for Measurement of Wet Film Thickness of Organic Coatings by Notched Gages, shall be used to ensure a monolithic coating and uniform thickness during application.

Temperature of the surface to be coated should be maintained between 40° F and 120° F during application. Prior to and during application, care should be taken to avoid exposure of direct sunlight or other intense heat source to the structure being coated. Where varying surface temperatures do exist, care should be taken to apply the coating when the temperature is falling versus rising or in the early morning. The humidity should also be observed to ensure compliance with the epoxy manufacturers' recommendations.

Manufacturer approved heated plural component spray equipment shall be used in the application of the specified protective epoxy coating. The spray equipment shall be specifically designed to accurately ratio and apply the specified protective coating materials and shall be regularly maintained and in proper working order.

If necessary, subsequent top coating or additional coats of the protective coating should occur as soon as the basecoat becomes tack free, ideally within 12 hours but no later than the recoat window for the specified products. Additional surface preparation procedures will be required if this recoat window is exceeded.

6. Labeling

a) The interior of each manhole shall be labeled during construction. Labels can be from the manufacturer (stencil, tag, etc.) or by the contractor (tag, permanent marker, paint pen, etc.). Label must include the manhole number according to the record drawings and must consist of letters at least 3 inches tall and must be located approximately 12 inches above the shelf of the manhole.

## 703 Service Connections

## A. Design

1. General Requirements

a) All residential subdivision lots shall be served by gravity unless otherwise approved. If a pump is approved, it shall be privately maintained and must pump into either a service connection placed on the lot. The pump and force main (if needed) must have a note on the recorded plat indicating the following: "Privately maintained sewer pump and force main is required to serve this lot".

b) Service connections to the main lines shall be perpendicular to the main line and shall extend to the edge of the right of way or easement line. Direct taps shall be within the top quarter of the main, or within a

manhole. All single family residences and businesses shall have individual connections to the public sewer main. Sewer services may not cross private property if the Development is subject to UDO requirements.

c) Multiple service connections located outside public right of way or public easements are for private use only and will not be maintained by the Town. A private sewer permit from NCDEQ shall be required on all private collection systems prior to construction plan approval. A cleanout or manhole shall be installed within each serviced lot's right of way or easement for the Town's use, and shall extend a minimum of 6 inches above the finished grade.

d) Cleanouts are required on all services with a maximum spacing of 50 feet for four (4) inch lines and 100 feet for six (6) inch lines. The first cleanout from the main/manhole shall be maintained by the Town and shall be installed one (1) foot inside the right of way line or edge of easement. All cleanouts shall extend a minimum of 6 inches above finished grade with brass caps or meet the optional cleanout method requirements in accordance with the Standard Details. Town maintenance of sewer services shall terminate at the first cleanout.

e) Sewer cleanouts located in paved areas, which bear vehicle loading, must have ductile iron risers, ductile iron fittings and a traffic rated cast iron cover assembly.

f) All 4 inch services shall connect directly into a public sewer main or manhole, in the fronting street or into an easement within the property. All 6 inch service connections shall be into a manhole.

g) Service lines connected to manholes shall not be through the cone section or manhole joints. Service lines shall be installed 6" above, but no more than 30 inches above the invert or shall be installed with a standard drop. Multiple service connections shall not be maintained by the Town. For 6-ft diameter and larger manholes no service is allowed in the reduced diameter riser sections of the manhole.

h) The use of in-line wyes for service connections shall be required for all new construction. When connecting to existing sewer mains, service saddle taps will be allowable. Taps shall be at the 10 or 2 o'clock position, and shall not be top taps.

i) Service connections to mains at depths of 14-ft and greater shall utilize ductile iron pipe between the main and the cleanout, including a ductile iron wye for the cleanout stack. Location and angle of fittings shall be as shown in the standard detail drawings.

j) Where the flood level rims of plumbing fixtures are below the elevation of the manhole cover of the next upstream manhole in the public sewer, such fixtures shall be protected by a backwater valve installed in the *building drain*, *branch of the building drain* or *horizontal branch* serving such fixtures. Plumbing fixtures having flood level rims above the elevation of the manhole cover of the next upstream manhole in the public sewer shall not discharge through a backwater valve.

## B. Materials

1. Pipe Materials

a) PVC Pipe shall be C900, schedule 40, or greater supplied in minimum 20-ft lengths. Schedule 40 PVC pipe shall be manufactured with a cell classification of 12454 in conformance with ASTM D1784. Schedule 40 pipes shall be manufactured to dimensional tolerances as specified in ASTM D1785 and rated for service conditions up to temperatures of 140-degrees Fahrenheit. The pipe may be joined by solvent weld in conformance with ASTM D2564.

Schedule 40 PVC pipe may be used for sewer services between 4 and 13 feet and shall require 4-inches of stone bedding extended to the springline.

PVC pipe and fittings for sewer laterals shall conform to ASTM D2665 “PVC Plastic Drain, Waste & Vent Piping” and shall be NSF approved. Laying lengths may be 10 or 20 feet with solvent weld type joints for Schedule 40 pipe or gasketed joint for PVC C900 DR18 pipe.

PVC C900 pipe shall be used in depths between 13 and 20 feet and shall require 6-inches of stone bedding extended 6-inches above the pipe crown.

b) Ductile Iron Pipe may be used for any depth sewer service but must be used for sanitary sewer services with less than 4 feet of cover or in excess of 20 feet of cover. Ductile iron services shall also be used in all cases where a well is located within 100-ft of the sewer service line. Ductile iron service piping shall be provided in conformance with the ductile iron piping standards outlined herein including cement mortar lining.

c) Any sewer service lateral deeper than 20 feet shall be pre-approved by the Director of Water Resources.

2. Sewer Service Fittings, New Construction

a) DIP Main with DIP Service
In-line wye fittings for ductile iron main lines joined with ductile iron service lines shall be typical ductile iron mechanical joint fittings as specified herein. In this case all fitting sizes shall conform to AWWA C153. Wye fittings through 10-inches in diameter shall be provided with cement mortar lining in accordance with AWWA C104 and provided with exterior asphaltic coating per AWWA C151. Wye fittings for lines larger than 10-inches in diameter shall be provided with Protecto 401 lining as specified herein for ductile iron pipe of the same sizing.

b) DIP Main with PVC Service
For ductile iron sewer mains to be joined with PVC service lines, the in-line wye fittings shall be slip joint ductile iron with an IPS sized branch for PVC schedule 40 service lines. Ductile iron fittings for connecting PVC service lines shall be deep bell, gasketed joint and air test rated. Gasket grooves shall be machined. Bell depths shall meet the minimum socket depth requirements of ASTM D3034 and ASTM F1336. Wall thickness shall meet the requirements of AWWA C153. Ductile iron wye fittings through 10-inches in diameter with IPS connections shall be provided with cement mortar lining in accordance with AWWA C104 and provided with exterior asphaltic coating per AWWA C151. Ductile iron wye fittings for PVC lines larger than 10-inches in diameter shall be provided with Protecto 401 lining as specified herein.

c) PVC Main with PVC Service
For PVC sewer mains to be joined with PVC service lines, PVC in-line wye fittings shall be provided. Typical Schedule 40 PVC fittings shall be provided at the cleanout wye and stack.

d) PVC Main with DIP Service
A ductile iron tee/wye shall be provided when the service line is required to be ductile iron due to a crossing or other obstruction. The fitting shall be specifically manufactured for ASTM 3034 PVC pipe such that a smooth flow way exists on the main line through the fitting. The branch shall be gasketed to receive the 4-inch DIP service line without additional fittings. The ductile iron tee/wye fitting shall be Protecto 401 lined.

3. Service Saddle Connections, Existing Sewer Mains

a) PVC service saddles shall be of the same material as the main, 45 degree deflection, and shall be solvent welded and fastened with single stainless steel bands. The saddle service branch shall be stubbed

slightly into the sewer main so that when installed, the saddle shall not slip or rotate.

b) For existing DIP main lines, ductile iron service saddles shall be used. The saddle assembly shall consist of a virgin SBR or NBR gasket compounded for sewer service, a ductile iron saddle casting, a 304 stainless steel adjustable strap for fastening the gasket and the saddle casting to the sewer main and a 304 stainless steel adjustable circle clamp for securing the service line into the rubber gasket. The saddle shall be furnished with adapters as required to properly receive the service pipe.

## C. Installation

1. General Requirements

a) Sewer laterals shall not be located in easements when gravity service can be provided to the property frontage at the street.

b) Each separately owned structure requires a separate tap to a public sewer.

c) Four inch lines shall have a minimum slope of ¼ inch per foot and 6 inch lines shall have a minimum slope of 1/8 inch per foot.

d) Service connections to new mains shall include the use of wye (not tee) connections. Saddle taps onto new lines shall not be allowed.

e) Saddle taps into existing PVC mains shall be made at the 10 o'clock or 2 o'clock position of the main with the wye saddle angled 45-degrees towards the direction of flow in the main. Taps shall only be made by a mechanical circular cutting saw providing a smooth and uniform cut for the saddle installation.

f) Service connections shall be made using an approved sewer saddle when the existing sewer line is 8", 10", or 12" in diameter. This service connection shall not be used when the sewer main material is truss sewer pipe. The opening in the sewer main for the sewer saddle shall be cut with a hydraulically or pneumatically driven circular tapping saw of the same nominal diameter as the sewer service line.

g) Service laterals to be maintained by the Town shall not be located beneath a driveway or curb, nor shall a clean-out be located in a sidewalk area without prior written approval from the Director of Water Resources.

## 704 Testing and Inspections

### A. General

The Contractor shall furnish all materials, labor, and equipment to perform all testing. The Contractor may arrange to obtain water for testing purposes from the Town. The Contractor shall reimburse the Town for all water used for construction at current inside utility rates.

### B. Sewer Main and Service Connection Testing

1. Visual Testing and Observation

   a) All materials used must be approved by the Town prior to installation. Rejected materials shall be immediately removed from the job site.

   b) Gravity sanitary sewer lines shall be clean and free from obstructions, and shall be visually inspected from every manhole. Lines which do not exhibit a true line and grade or which have structural defects shall be corrected. Sanitary sewer service connections shall be visually inspected prior to backfilling.

      The Town may re-inspect the line at any time prior to final acceptance if any damage or displacement is suspected to have occurred subsequent to the initial inspection

2. Air Testing

   a) Low-pressure air testing in accordance with ASTM F1417 shall be performed on all sewer mains before the laterals or stubs are installed on the line, and after the trench has been backfilled to finished grade. Plugs shall be installed at each manhole to seal off the test section. Prior to testing, the sewer line shall be clear of debris and flushed with water as necessary. The line will be pressurized with a single hose and monitored by a separate hose connection from the plug. Air then shall be slowly introduced into the sealed line until the internal air pressure reaches 5.0 psig. The air pressure shall then be allowed to stabilize for a minimum of 2 minutes. The line shall be "acceptable" if the pressure does not drop in the time prescribed for the test in the table below.

| Length of Test Section (ft) | Nominal Pipe Diameter (in) | | | | | | | | | | | |
|---|---|---|---|---|---|---|---|---|---|---|---|---|
| | | 8 | 12 | 15 | 16 | 18 | 21 | 24 | 30 | 36 | 42 |
| 50 | | 7:33 | 11:20 | 14:10 | 15:11 | 17:00 | 19:48 | 22:40 | 28:19 | 34:00 | 39:40 |
| 100 | | 7:33 | 11:20 | 14:10 | 15:11 | 17:00 | 19:48 | 22:47 | 35:37 | 51:17 | 69:48 |
| 150 | | 7:33 | 11:20 | 14:10 | 15:12 | 19:14 | 26:10 | 34:11 | 53:25 | 76:55 | 104:42 |
| 200 | | 7:33 | 11:24 | 17:48 | 20:16 | 25:39 | 34:54 | 45:35 | 71:13 | 102:36 | 139:36 |
| 250 | | 7:33 | 14:15 | 22:16 | 25:20 | 32:03 | 43:37 | 56:58 | 89:02 | 128:12 | 174:30 |
| 300 | | 7:35 | 17:06 | 26:43 | 30:23 | 38:28 | 52:21 | 68:22 | 106:48 | 153:54 | 209:25 |
| 350 | | 8:52 | 19:57 | 31:10 | 35:27 | 44:52 | 61:05 | 79:46 | 124:42 | 179:30 | 244:19 |
| 400 | | 10:07 | 22:48 | 35:37 | 40:31 | 51:17 | 69:48 | 91:10 | 142:30 | 205:06 | 279:13 |
| 450 | | 11:23 | 25:39 | 40:04 | 45:35 | 57:42 | 78:31 | 102:36 | 160:18 | 230:48 | 314:07 |
| 500 | | 12:39 | 28:30 | 44:31 | 50:39 | 64:06 | 87:15 | 114:00 | 178:06 | 256:24 | 349:02 |

b) If the section fails to meet these requirements, the source of leakage shall be repaired and the pipe section re-inspected

c) The Contractor shall furnish all plugs, compressors, hoses, gauges, and any other equipment necessary to conduct the low-pressure test.

3. Infiltration Tests

a) Portions of the sewer lines, which exhibit a higher ground water table during construction, shall be tested for infiltration. The portions of the line to be infiltration tested shall be determined by the Town.

b) The portion of the sewer line designated by the Town shall be tested for infiltration by installing a V-notch measuring weir or other suitable measuring device in the downstream end of the pipe to be tested. When a steady flow occurs over the weir, the rate of flow (infiltration) shall be measured. The rate thus measured shall not exceed 100 gallons per 24 hours per inch of sewer pipe diameter per mile of pipe. The Contractor shall furnish weirs and other equipment required for infiltration tests and the tests shall be performed in the presence of the Town.

c) Should the infiltration tests reveal leakage in excess of the allowable, the leaking joints shall be re-laid if necessary or other remedial construction shall be performed by and at the expense of the Contractor. The section of sewer thus repaired shall then be retested to determine compliance with the Specifications.

4. Deflection Testing for Flexible Pipe

a) The mandrel (go/no-go) deflection test shall be performed on each line prior to acceptance and no sooner than 30 days after installation. The pipeline shall be thoroughly clean and free of debris and/or sediment prior to testing. The Contractor shall supply the mandrel used for this performance test. The mandrel device shall be cylindrical in shape having 9 or 10 possible contact points with the pipe. The mandrel's length and diameter (ID of proving ring) shall be in accordance with the following tables, and shall be subject to the Town's approval.

b) For flexible pipes (such as PVC), the following shall apply:

| Nominal Diameter (inches) | Pipe Class | Average Inside Pipe Diameter (inches) | 5% Deflection Mandrel Diameter (inches) | Length of Mandrel (inches) | Minimum Fins Included with Mandrel |
|---|---|---|---|---|---|
| 8 | C900 | 7.98 | 7.58 | 10 | 9 |
| 8 | SDR 35 | 7.891 | 7.496 | 10 | 9 |
| 10 | C900 | 9.79 | 9.30 | 10 | 9 |
| 10 | SDR 35 | 9.864 | 9.371 | 10 | 9 |
| 12 | C900 | 11.65 | 11.07 | 10 | 9 |
| 12 | SDR 35 | 11.737 | 11.150 | 10 | 9 |
| 15 | SDR 35 | 14.374 | 13.655 | 10 | 9 |
| 16 | C900 | 15.35 | 14.58 | 10 | 9 |
| 18 | C900 | 17.20 | 16.34 | 24 | 9 |
| 24 | C900 | 22.76 | 21.62 | 24 | 9 |

Note: Calculated 5% deflection allowance does not include additional manufacturing tolerances provided by pipe manufacturers. For the purposes of testing, 5% deflection shall be calculated from standard pipe inside diameter as published in ASTM D3034 and ASTM F679.

c) The mandrel shall be advanced through the pipeline to determine if bedding and embedment has been provided in compliance with ASTM D2321 to assure joint deflection of less than 5%. If the mandrel becomes obstructed for any reason while being pulled through the line with less than 100-lbs of force, the location of the defect shall be noted and the mandrel shall be removed from the pipeline. Under no circumstances shall heavy equipment be utilized to force the mandrel through the pipeline. Deflection testing may be done concurrently with sewer televising inspections, provided the mandrel is kept within visible range of the camera. The mandrel diameter shall have a tolerance of +/- 0.01 inch. Contact length shall not be less than 2 inches.

Any lines not meeting this test shall be corrected by the Contractor and the test repeated. The Town shall approve the mandrel. The Contractor shall furnish drawings of the mandrel with complete dimensions to the Town upon request.

5. Video Assessment and Cleaning

a) As a final measure required for acceptance, the Contractor shall clean and televise all newly installed sewer mains prior to acceptance by the Town. A 3rd party CCTV Contractor shall televise the sewer main and all lateral connections installed from the upstream to downstream manhole with no reverse setups or cutaways. This shall be done at the Contractor's expense. Throughout shooting, the camera shall be panned and tilted for a complete view of the main. Lighting shall be adequate to view the entire sewer main and service connections from beginning to end. The video inspection shall be submitted to the Town on a CD/DVD and formatted with software compatible and readable by the Town. The Town shall not be responsible for purchasing additional software necessary to view the CD/DVD.

b) The camera shall be advanced at a uniform rate not to exceed 20 feet per minute that allows a full and thorough inspection of the new sewer main. The camera shall be a color, pan and tilt camera capable of producing a five hundred line resolution picture. Lighting for the camera shall be sufficient to yield a clear picture of the entire periphery of the pipe. The picture quality shall be acceptable and sufficient to allow a complete inspection with no lapses in coverage. The length of the sewer main shall be measured and recorded on the video screen. The distance counter shall be calibrated before shooting the inspection video.

c) The Contractor shall clean the sewer mains ahead of video inspection with a high-velocity water jet. The video inspection shall take place within 2-hours of cleaning operations as witnessed by the Town. All construction debris shall be collected in the downstream manhole and shall not be released into the sewer system. No other work shall be performed on the Sewer lines after cleaning and prior to video inspection

d) The Town shall be present throughout the cleaning and televising of the sewer mains to verify that the video work complies with the Specifications. The camera operator shall stop, reverse, pan, and tilt the camera to view any area of interest during the inspection as directed from the Town.

e) It is recommended that all site grading and all utilities must be installed and complete prior to final inspection to ensure that damages to the sewer main do not occur. Damages found after final inspection would requiring re-inspection by the Town.

f) CCTV inspection date must be acknowledged and approved by the Water Resources Department prior to inspection. All structures must be physically labeled by the contractor with number shown on the video. Punch list items from the inspection must be submitted on the Town's approved 3rd Party CCTV Report form and all vides files uploaded to One Drive (flash drives and CD/DVDs are not acceptable).

g) The contractor may not perform CCTV inspections on any utilities that they have installed.

6. Marker Tape Testing

Testing of the marker tape shall be performed by the Contractor at the completion of the project to assure it is working properly and completely detectable. It is the Contractor's responsibility to provide the necessary equipment to test the markers. Any defective, missing, or otherwise non-locatable segments shall be replaced.

## C. Manhole Testing

1. Vacuum Testing

a) All newly installed manholes shall pass a vacuum test in accordance with ASTM C 1244. The Contractor shall supply all equipment and materials necessary to vacuum test the manholes.

b) Vacuum Testing shall be completed prior to any specified coating and lining materials being installed.

c) The Town shall be present and witness all vacuum testing.

d) The following vacuum testing criteria shall apply for compliance with the testing procedure.

1) A vacuum of 10-inches of mercury shall be drawn with an approved vacuum testing unit.

2) The testing time shall not be measured until after the vacuum pump has been shut off.

3) The time required for the vacuum to drop from 10-inches to 9-inches of mercury shall meet or exceed the values listed in the following table.

Manhole Vacuum Testing Time

| Depth | Manhole Diameter (inches) | | |
|---|---|---|---|
| (feet) | 48 | 60 | 72 |
| Time (seconds) | | | |
| 8 | 20 | 26 | 33 |
| 10 | 25 | 33 | 41 |
| 12 | 30 | 39 | 49 |
| 14 | 35 | 48 | 57 |
| 16 | 40 | 52 | 67 |
| 18 | 45 | 59 | 73 |
| 20 | 50 | 65 | 81 |
| 22 | 55 | 72 | 89 |
| 24 | 59 | 78 | 97 |
| 26 | 64 | 85 | 105 |
| 28 | 69 | 91 | 113 |
| 30 | 74 | 98 | 121 |

2. Holiday Testing of Lined Manholes

All manholes that require an epoxy coating shall undergo discontinuity testing. This shall be a high-voltage spark test conducted in accordance with NACE International Standard Practice 0188. All areas of the manhole coated shall be tested. The spark tester shall be set at a minimum of 100 volts per mil of coating thickness applied. The Contractor shall supply the spark tester and all testing equipment and labor needed to perform this test.

All holidays identified must be repaired. The epoxy coating must be abraded and cleaned prior to re-coating. All touch-up work shall be in accordance with the epoxy manufacturers guidelines.

## 705 Aerial Crossings

### A. Design

Aerial crossings shall only be utilized in cases where buried crossings are not feasible due to stream crossings, compliance with riparian buffer standards, minimizing impacts to wetlands, preventing excessive depth of installation, or as otherwise directed by the Town of Apex. All aerial crossings shall have prior approval by the Water Resources Director and will only be considered if there are no practical alternatives available, cost shall not be considered justification for aerial crossings

In cases where aerial crossings are utilized to cross streams, the bottom of the pipe shall be installed above the 25-year flood elevation of the stream. Piers shall generally be located at a uniform spacing of 20-ft or 1 pier for every joint of pipe. Piers shall be provided in accordance with the standard details or as otherwise designed by a licensed NC Professional Engineer.

All pier footings shall be designed by a licensed NC Professional Engineer and the assumptions provided in the footing design shall be included on the plans. At a minimum, the footing design shall include: 1) the allowable soil bearing capacity, 2) design concrete compressive strength, 3) plan for reinforcing steel with sizing and location of bars, 4) force diagram including buoyant forces, stream velocity impacts 5) depth of installation to prevent frost heaving, 6) bedding design to prevent differential settlement and 7) factors of safety for unanticipated loads such as trees falling across the aerial crossing.

At a minimum all pier foundations shall be constructed on a base of 12-inches of washed stone. The soil conditions under the pier shall be evaluated by a licensed NC Geotechnical Engineer to determine if the allowable soil bearing capacity meets or exceeds the design assumptions included in the structural design. If the soil conditions fail to meet the specified bearing capacity requirements, a pile foundation shall be provided or the soils shall be undercut and replaced in conformance with the recommendations of the geotechnical engineer of record.

Piers installed in stream beds shall be avoided in lieu of spanned crossings. Spanned pipe crossings greater than 20-ft shall be provided in accordance with the pipe manufacturer's specifications and shall not exceed 40-ft for ductile iron pipe. Spanned pipe crossings shall be designed such that all flanges and exterior pipe connections are located above the 25-year flood elevation.

Spanned crossings greater than 40-ft without piers shall be provided in a steel encasement pipe and the entire crossing including piers, foundation, truss and/or beam supports and pipe thickness design shall be provided by a licensed NC Structural Engineer.

## B. Pipe Materials

1. **Ductile iron pipe** for aerial crossings shall be interior lined with Protecto 401 at 40-mils regardless of pipe diameter from manhole to manhole. All joints for ductile iron pipe utilized in aerial crossings shall be restrained with a US Pipe Mech-Lok joint, American MJ Coupled joint, or other as approved by the pipe manufacturer, the Water Resources Department and the Engineer of Record. Ductile iron pipe utilized for spanned crossings greater than 20-ft without a pier shall typically be provided with flanged connections. All bolts and fasteners for flanged or bolt locking restraining systems shall be provided in stainless steel and installed in a manner to prevent seizing.

2. **PVC pipe** shall not be approved for aerial crossings.

3. **Steel pipe** provided for aerial crossings shall be fabricated with grade B steel that has minimum yield strength of 35 KSI in accordance with ASTM A139. Steel pipe for aerial crossings shall be provided with minimum wall thickness consistent with a pressure class of 200-psi or greater. Steel pipe for aerial sewer crossings shall be provided with 40-mils of interior ceramic coating, such as Ceramaline and provided with an exterior tape wrap approved by the manufacturer. All steel pipe joints shall be welded in conformance with manufacturers' specifications.

## C. Installation

Aerial crossings are often utilized to span sensitive environmental areas and installation shall be consistent with plans to preserve the sensitive areas.

Joints of bolt lock or coupled restrained pipe shall be located within 2-ft of each pier as outlined by the detail drawings. Contractor shall ensure the length of pipe joints allows for this spacing.

Pipe shall be secured to each pier with 1/4-inch by 2-inch width steel straps fastened to 4; ½-inch stainless steel lugs anchored and adhered with epoxy to the concrete pier. The steel straps shall receive a weather resistant painted finish to prevent long term corrosion.

Precast piers may be submitted for approval provided the footing and foundation designs are completed by licensed structural and geotechnical engineers.

In cases where soil conditions cannot be sufficiently stabilized to provide an adequate foundation for concrete piers, a pile foundation designed by a licensed NC structural engineer and approved by the Town shall be provided.

Reinforcing steel for concrete piers shall be grade 40 and shall be constructed in conformance with the latest edition of the "Recommended Practice for Placing Reinforcing Bars" or other documentation as published by the Concrete Reinforcing Steel Institute.

In cases where rock exists at the foundation elevation, the footing shall be drilled and connected with dowels into the rock layer.

# 706 Repairs, Modifications, and Abandonment

## A. Sewer Main Repairs

1. Vitrified Clay Pipe - replace damaged section with DIP and install a Fernco coupling at each end encased in concrete.

2. PVC Pipe - replace damaged section with PVC Pipe and install a Fernco coupling at each end encased in concrete.

3. ABS/PVC Truss Pipe - replace damaged section with DIP and install a Fernco coupling at each end encased in concrete.

4. Asbestos Cement Pipe - Replace damaged section with DIP and couplings encased in concrete.

## B. Installation

1. All repairs to damaged sanitary sewer lines in paved areas shall be backfilled with ABC stone (crusher run) to a density of 95 percent Standard Proctor.

2. All repairs to damaged sanitary sewer lines shall be bedded with 6-inches of washed stone and compacted to a minimum of 95% Standard Proctor density before installing the new joint of ductile iron or PVC pipe.

## C. Draining Sewer Mains

A detailed bypass pumping and emergency plan shall be required for any sewer line draining event.

All sanitary sewer mains and sewer force mains 20-inches and larger, active, inactive, or abandoned shall begin to be drained by tapping the bottom half of the pipe. A corporation stop or other valve shall be provided to control flow. All effluent shall be pumped to a downstream manhole (when available) or other containment tank utilizing continuous piping. The use of a sump pit on lines 20-inches and larger is not allowed.

In sensitive environmental areas and in other various scenarios the Water Resources Department may require lines less than 20-inches also be tapped in order to be drained.

## D. Abandonment of Existing Sewer Mains

1. Existing sewer mains and casings located outside of road sections shall be removed, unless otherwise directed by the Town. All materials and labor shall be provided by the contractor.

2. Grout filling and abandoning in place may be allowed with prior approval from the Director of Water Resources.

# SECTION 800
# WASTEWATER PUMPING SYSTEMS AND FORCE MAINS


**801 Pump Station General**
- A. Design Requirements
- B. Warranty
- C. Submittals

**802 Pump Station Site and Structures**
- A. General
- B. Site Work
- C. Structures
- D. Piping and Valves
- E. Electrical - General

**803 Pump Station Equipment**
- A. Pumps
- B. Pump Control Systems
- C. Alarm Dialer/SCADA/Telemetry
- D. Grinders
- E. Generators
- F. Automatic Transfer Switches

**804 Odor/Chemical Facilities**

**805 Inspections, Testing, and Training**
- A. Inspections
- B. Testing
- C. Operator Training

**806 Force Main General**

**807 Wastewater Force Mains**
- A. Design
- B. Materials
- C. Installation
- E. Valves and Appurtenances

**808 Force Main Inspections and Testing**
- A. Inspections
- B. Testing

## 801 Pump Station General

### A. Design Requirements

1. These Specifications apply to all pump stations and associated facilities that are to be owned, operated, and maintained by the Town of Apex. Designers of private pump stations and force mains and associated should look for guidance from the appropriate permitting agency (NCDEQ, NC Plumbing Code, etc.).

2. All aspects of the design of pump stations, and associated facilities shall, at a minimum, meet the requirements of the latest version of the NCDENR "Minimum Design Criteria for the Fast-Track Permitting of Pump Stations and Force Mains". Requirements presented in the Town of Apex Standard Specifications hereunder that are more restrictive or go above and beyond the requirements of the Minimum Design Criteria are required by the Town of Apex.

3. All aspects of the design of pump stations, and associated facilities shall be submitted for review and approval to the Town of Apex Water Resources Department. This review may be more extensive than the typical development site plan process. Materials necessary for the review and requiring approval include complete plans, Specifications, design reports, and specific equipment submittals for the specific pump station, as described hereunder.

4. Wastewater flow rates for the entire natural drainage basin must be accounted for as outlined in Specification 700, Wastewater Collection Systems. The receiving gravity sewer system that will accept flow from this pump station must also be evaluated to determine if additional flow can be accepted and if any improvements are required. All required improvements shall be incorporated as part of the pump station/force main project and shall be installed prior to the pump station becoming active.

5. Prior to approval of any pump station plan, a detailed economic analysis consisting of minimum 20-year present worth evaluation shall be submitted by the Engineer-of-Record comparing the extension of gravity sewer service with the construction of a pump station and force main alternative. Gravity sewer systems shall always be preferred over pump station and force main construction. The Town of Apex reserves its right to consider economic evaluations, service area configuration, operating costs and other external factors before approving pump station plan submittals in lieu of gravity sewer extensions. The estimated cost of the gravity alternative must be greater than 3.5 times the cost of the pumping station alternative in order for the Town to allow a pump station.

6. All equipment, except for the generator, included in this Specification shall be designed for a sound rating of 55 dB(A) or less at a distance of 21 feet from the operating equipment. The generator shall include a sound attenuating enclosure and hospital grade silencer. The generator shall have a sound rating of less than

71 dbA for generators rated below 150KW and less than 73 dba for generators, rated between 150KW and 250KW, at a distance of 21 feet from the operating equipment. Warning horns and sirens have no sound restrictions.

The pump station design shall incorporate ways to minimize the sound levels leaving the site property. Factors to consider include equipment layout, cumulative sound levels, and walls that reflect the sound. Equipment submittals that include the sound ratings for the major equipment to be installed at the pump station shall be supplied to and approved by the Water Resources Department prior to ordering the equipment.

The pump station shall not be approved for routine operation until sound testing has demonstrated that the noise levels are in accordance with the requirements of this section. All sound testing shall be performed by reputable personnel and testing equipment to assure accuracy. The Director reserves the right to require certified sound engineers in cases when the accuracy of the testing equipment is uncertain. The Director may also require sound testing to be redone prior to the end of the corrections period to further demonstrate that the pump station, including the generator, is performing as designed.

Generator testing and operation other than for urgent necessity in the interest of public health and safety shall be during the time periods of Monday through Friday between the hours of 9:00 a.m. and 4:00 p.m., not including holidays which are observed by the state.

7. All pump station facility design plans shall evaluate surge and water hammer, and incorporate sufficient surge suppression based on the range of flows, pressure and other variables included in the pump station design.

8. All pump station facility designs shall include emergency by-pass pumping capabilities and permit sufficient space to accommodate equipment staging.

9. All pumps shall perform a drawdown test to verify pump capacity flow rates. Town representatives shall be present during the test. Documentation of the test shall be provided to the Town for approval.

## B. Warranty

1. All equipment, materials, and systems supplied under this Specification shall be provided with a warranty from the manufacturer to the Town that the subject equipment, materials, and systems shall be free of defects in workmanship and material, and shall operate as intended under the known conditions, for a minimum period of one year. The warranty shall be in printed form and made applicable to the Town (as Warrantee) at the time of acceptance for maintenance by the Town.

## C. Submittals

1. Design Report

   a) A design report signed and sealed by a North Carolina Professional Engineer is required with the submittal of plans and Specifications for any facilities covered under this section that are proposed for construction. This design report shall contain, at a minimum, the following design criteria:

      1) Total dynamic head calculations for all applicable pumping situations.
      2) System curve and pump curve analysis used to determine pump selection and operating point.
      3) Pump station cycle and pump run times covering the high, low and average flows over the entire expected operating period of the pump station.
      4) Response time available in event of an emergency (time between the high water alarm and the first system overflow at average design flow and peak design flow).
      5) Pump station flotation/buoyancy calculations.
      6) Minimum velocity within the force main, including an analysis of the capabilities of the pumps to completely flush any depressed sections of the force main in a single pumping cycle.
      7) Maximum detention times within the pump station and force main covering the low flows over the entire expected operating period of the pump station.
      8) An evaluation of the capability of the receiving sewer to handle the peak flow discharge from the proposed facility in addition to the existing or planned peak flows currently handled by the receiving sewer or sewage facility.
      9) Airflow calculations and chemical dosing calculations for the odor control facilities (if applicable).
      10) Flow capacity and headloss calculations for the grinder unit.
      11) Calculations for the sizing of the backup power generator.
      12) If jockey pumps are being proposed calculations much show how the pump can meet all design criteria.
      13) Total number of lots or parcels serviced, off-site drainage area and zoning, average daily flow, and peak daily flow.

2. Project Review Submittals

   a) Project Review Submittals shall be submitted to the Town of Apex Water Resources Department for review and approval prior to application for a permit for the pump station or force main, and prior to entering into construction contracts or purchasing any equipment for the pump station or force main. Obtaining permits, entering into construction contracts, or purchasing any equipment in no way obligates the Town of Apex to accepting designs or

equipment that do not meet the specified standards or other requirements the Town may have.

b) The Project Review Submittals shall include, at a minimum, complete plans and Specifications, a design report as described above, and manufacturer's information on specific major equipment listed in this Specification section. The information submitted on equipment shall include, at a minimum, the name of the manufacturer and the specific model being supplied, fabrication and assembly drawings, detailed specifications and data covering materials, parts, devices, and accessories forming a part of the equipment furnished. It shall also include any system hydraulic schematics, electrical wiring diagrams, and control panel schematics. Additional detailed information that may be required for submittal for specific equipment is listed in the appropriate equipment section.

3. Pre-Approved Equal Submittals

a) Equipment and systems of equal quality and efficiency may be available from manufacturers and suppliers other than those listed in this Section. No attempt is made to preclude the furnishing of similar quality items by other manufacturers. The use of alternate equipment and products will be considered if it can be demonstrated that these items have equal or superior construction performance, operating and maintenance costs, offer a present worth cost equal to or less than the specified items, and do not adversely affect other system components.

b) Equipment and systems other than those listed in this Section must receive approval from the Director of Water Resources prior to application for a permit for the pump station or force main, and prior to entering into construction contracts or purchasing any equipment or systems for the pump station or force main. Purchasing equipment in no way obligates the Town of Apex to accepting equipment that does not meet the specified standards or other requirements the Town may have.

c) Pre-Approved Equal packages shall include the following information as a minimum:

1) Current catalog data sheets and complete technical data to support Specification compliance.
2) A point-by-point list clearly stating all differences between the named item and the proposed alternate and a separate list clearly stating all exceptions to the Specifications. If no exceptions are listed, then no exceptions to the Specifications will be allowed.
3) Installation list with name, address and phone number of contact person for each of at least five (5) installations where the proposed equipment has been in similar service and satisfactory operation for

at least two (2) years. The date of placing equipment in service at each listed installation shall be provided.

4) Three (3) copies of Pre-Approved Equal information shall be submitted.

d) Equipment that meets the Pre-Approved Equal submittal requirements, the technical Specification requirements, and all other requirements of the Town of Apex, will be approved by the Director of Water Resources via letter within 14 calendar days of receipt of a complete package. Approval of Equal equipment or systems in no way eliminates the requirement for complete submittals at a later date.

4. Testing Results Submittals

a) The results of all testing shall be submitted to the Town of Apex Water Resources Department for review prior to continuing progress on the particular equipment. If shop testing is required, results shall be submitted prior to delivery of the equipment. If installation verification is required, results shall be submitted prior to start-up and testing of the equipment. If final start-up tests are required, results shall be submitted prior to final acceptance of the equipment.

b) Three printed copies of all test results are required to be submitted for review.

c) A final, compiled summary of all testing done on all equipment shall be provided to the Town of Apex upon completion of the project prior to project closeout and final acceptance. This final, compiled summary shall consist of a single bound printed copy, and an electronic copy (CD).

5. Operation and Maintenance Manuals (O&M)

a) Operation and Maintenance (O&M) manuals are required for all equipment and systems furnished under this Specification section. **Three copies shall be supplied to the Town in printed format prior to startup of the subject equipment or systems.** The O&M manuals shall contain all of the necessary information for proper operation and maintenance of the subject equipment and systems. At a minimum, the O&M manuals shall contain the following:

1) Final approved shop drawings.
2) Design data including certified pump curves and system curves.
3) Wiring diagrams and control schematics.
4) Detailed inventory of installed equipment, including its functional description, and manufacturer name, address, and phone number (and the same for a local representative of the manufacturer).
5) Operating instructions.
6) Troubleshooting techniques.

7) Maintenance schedules.
8) Assembly and disassembly instructions.
9) Instructions for start-up and shutdown, as well as calibration and adjustment.
10) Annotated hard copy and downloadable electronic copy of application program for all field programmable equipment (eg PLCs, operator interfaces, etc.)

b) A final, compiled Operation and Maintenance (O&M) manual covering all equipment and systems supplied, shall be provided to the Town of Apex upon completion of the project prior to project closeout and final acceptance. This final, compiled summary shall consist of a single bound printed copy, and an electronic copy (CD).
c) Any spare parts listed in the O&M manuals and/or recommended by the manufacturer shall be provided to the Town with the O&M Manual submittal.

## 802 Pump Station Site and Structures

### A. General

1. Pump stations shall be designed in accordance with these standard specifications, the Town's Standard Details, and NCDEQ's manual for the Minimum Design Criteria for the Permitting of Pump Stations and Force Mains.

2. Pump stations shall be located on a parcel or an easement that is dedicated to the Town of Apex. The site shall be directly connected to a dedicated public right-of-way or have a dedicated access easement to a public right-of-way.

3. The Town requires sewage grinders, on-site backup power, and odor control facilities at all pump stations. Sizing of these items will be based on expected flow volumes and characteristics.

4. All stations shall have a minimum of 2 pumps of equal capacity. The pumps shall be solids handling, submersible, centrifugal pumps each capable of pumping flows equal to the expected peak hourly flow. The allowable peak flow can be found in Section 0700. The Director of Water Resources may require that higher peaking factors be used. The Director of Water Resources may require wet well/dry well pumping systems when peak flows exceed 1-MGD. Where 3 or more pumps are required, they should be of such capacity that with the largest unit out of service, the remaining units shall have capacity to handle the peak hourly flows. Pumps and force mains shall be sized to provide a minimum velocity in the force main of 2.5 fps and a maximum velocity of 10 fps.

5. Pump stations shall remain fully functional, operational, accessible and free from physical damage during a 100-year flood.

## B. Site Work

1. The site shall be graded to drain and direct stormwater runoff away from the pump station, and to remove storm water runoff from the site in a non-erosive manner. Drainage swales shall be incorporated to direct drainage away from the site, if necessary.

2. The site shall be stabilized by a minimum of 12" crushed stone over 98% compacted subgrade, low maintenance vegetative ground cover or other suitable materials. Visual screening and landscaping shall be provided in accordance with the approved site plan.

3. The site shall be secured by an 8-ft high vinyl coated chain link fence. It shall have 3-wire vinyl coated barb arms, set at an outward facing 45 degree angle and located at the top of each post. Each wire to be 3 strand barb wire class III galvanized or aluminized. The outer barb wire shall hold a load of 250-lbs. The 8-ft height does not include the barb arms. The vinyl coating shall be black and provided with UV resistant vinyl. Fencing shall be provided around the entire perimeter of the pump station property maintaining an offset of 10-12 feet from the property boundary. All fence posts shall also be vinyl coated over the galvanized steel in black color to match fencing and privacy screening. Manual slide gates for smaller pump stations shall permit 180-degree opening and be provided in minimum width of 14-ft. Gates at larger pump stations receiving chemical deliveries shall be a minimum of 16-ft wide to accommodate tractor trailer accessibility and be provided with electrically operated slide gates. All gate posts and corner posts shall be provided with minimum 4-inch diameter fence posts. The fence shall be screened with a row of evergreen shrubs, in accordance with the Town's UDO and Planning requirements, that are at least 5' in height at the time of planting. The fence gates shall be provided with black vinyl coated privacy slats rated for a minimum life span of 12-years. If site conditions do not allow for evergreen shrubs, then privacy slats shall be provided across the entire surface area of the fence including gates.

4. The pump station site shall permit the loading and removal of all equipment (pumps, grinders, generators, etc.) from the pump station site with an appropriately sized truck and/or crane.

5. The site shall feature adequate turn around areas for a WB-40 service vehicle and provide a minimum 16 foot wide all-weather access road to the site with grades not to exceed 10%. If chemical feed systems are included, additional turning radius may be required. The access road shall consist of a standard concrete curb tie and apron through the right-of-way and transition to an asphalt-concrete section with an 8-inch stone base and 3-inch surface course, or 12" of crushed stone over minimum 98% compacted subgrade. Shoulders and side ditches should be included, as applicable.

6. An **LED** light equivalent to a high pressure sodium vapor light with a minimum 600 watt capacity in compliance with Town of Apex standards, is required. The light shall be mounted on a suitable utility that retracts or pivots for bulb maintenance from ground level. The light shall be at a height of 30 feet and shall be controlled by an on/off switch mounted on the pole. All area lighting shall be provided in a downward projecting fixture, such as shoe box type light or approved equal. Open globe lighting shall be prohibited on all pump station sites.

7. Pump stations shall have a metered potable water supply from the Town of Apex public water distribution system at minimum sizing of 1-inch service, but provided with sufficient volume and pressure for operations including wash downs, etc. For larger stations a 2-inch service shall be provided to accommodate larger wash down and service needs. The supply shall have an approved lead free reduced pressure principle, RPA, backflow prevention assembly. A minimum of one (1) freeze proof yard hydrant is required within the fenced area. Emergency shower and eye washing basin shall be provided in pump stations with chemical odor control facilities. Separate reduced pressure principle assemblies, RPA, backflow preventers shall be required as necessary to protect eye wash and/or emergency shower stations from potential chemical contamination within the pump station site. As required by ANSI Z358.1, the shower and eye wash stations shall be provided with a tepid water system and be able to operate simultaneously. Pressure reducing valve shall be required for any static pressure over 80 PSI.

8. A grounding electrode system shall be provided for all pump station site wiring systems and shall be connected to the fence, generator, and electrical service.

## C. Structures

1. <u>General</u>

   a) The submersible pump station structures shall consist, at a minimum, of a grinder manhole, a wet well, and a valve vault. Large, integrated structures are permissible, however, there shall be walls separating the portions of the structure listed above. Electric motor operated grinders will be required at all stations. Pump station structures other than the wet well shall be provided with a means to remove accumulated water and wastewater from the structure.

   b) Any portion of a pump station structure that is open and would allow floodwater entry into the wastewater system shall be built with a top elevation of 2 feet above the 100 year flood elevation. All structures not meeting the elevation requirement that could allow entry of floodwater into the wastewater system shall be sealed watertight with a vent elevated a minimum of 2 feet above the 100 year flood elevation.

c) All pump station structures shall be designed to withstand hydrostatic forces that they will be subjected to, including uplift and shall be equipped with buoyancy collars.

d) Refer to standard detail for stone base requirements under all structures.

e) Fall protection grating shall be installed at all access hatches. Additional anchor posts shall be installed according to the Standard Detail.

2. Wet Well

a) The wet well shall have a minimum inside dimension of 6 feet, and shall be large enough to easily accommodate the removal of each pump and a basket strainer. The wet well shall be designed to have an operating volume sufficient to provide pump operating cycles to match the manufacturer's recommendations. The pump operating cycles must be between two and eight times per hour at design daily flow (without being excessively deep. All wet wells must be concentric.

b) The wet well shall be constructed of precast concrete manhole sections or cast-in-place concrete. Extended bases or another foundation shall be used to provide adequate bearing surface and flotation protection, if needed. All concrete shall have a minimum 28 day compressive strength of 4000 psi. The Director of Water Resources may require a higher strength concrete.

c) Precast concrete manhole wet wells shall conform to ASTM C-478. Manhole section joints shall be of a durable mastic sealing material and be watertight in accordance with ASTM C-443. The exterior of manhole wet wells shall have a factory applied bitumastic or asphaltic coating. The exterior of wetwell joints shall be overlapped by an approved material such as Conwrap, Conseal, etc. The interior side of the joints shall be plastered smooth with portland cement grout.

d) Cast-in-place wet wells shall be properly designed by a NCPE and include appropriate structural support, waterproofing, exterior coating, structure covers, access hatches, etc.

e) At a minimum, wet wells shall have a vent made from ductile iron with flanged joint pipe fittings. An insect screen shall be included at the exposed end of the vent pipe. The screen shall be bronze or aluminum insect screening. Forced air venting is also allowed and will be required on individual pump stations in conjunction with odor control measures, depending on circumstances.

f) Wet wells and wet well piping shall be coated with at least 80-mils of an approved monolithic epoxy coating system consisting of a 100% solids, solvent-free, two-component epoxy resin for up to 100 mils of coating with a

manufacturer approved set time of 6-hours or less. The epoxy coating system shall be Sherwin Williams Sher-Flex, Raven Lining Systems, or approved equal and installed in no more than 2 applications with no runs and no holidays. High voltage holiday testing shall be utilized to verify there are no voids in the coating. The joints of pre-cast structures shall receive three (3) coats of mortar so as to achieve a smooth surface at each joint. Epoxy coatings shall only be applied to adequately cured concrete structures that have been sufficiently washed and prepared for epoxy coating installation. Properly applied coating shall provide a smooth finish at 80-mils or greater and fill all pores in concrete substrate.

g) Care will be taken to ensure no epoxy coating is applied to the pump coupling face, the guide rails, or any other part that needs to allow movement or replacement on a regular basis.

h) Cover slabs for wet well and valve vaults shall be reinforced concrete with integral cast in place access hatch covers. Cover slabs shall be reinforced as per ACI Code and specially reinforced around openings. Access covers shall be double leaf or single leaf (as required) aluminum diamond pattern floor hatch of 1/4-inch (minimum) thickness capable of withstanding 150 psf without permanent damage. Each leaf shall open 90 degrees and be attached to the frame by steel hinges. The door shall have a lock in the open position and vinyl grip handle to release lock for closing.

i) Each we well shall be equipped with a removable extension ladder as specified to enable access. The Town shall designate the location during the review process.

j) Pre-cast structures shall have a Sherwin Williams Sher-Flex, Raven Lining Systems, or equivalent applied to the outside of all tongue and groove joints. Prior to backfilling the wet well structure, the entire surface shall receive 1 coat. The material used for exterior coating shall meet the requirements of Corps of Engineers Specification C-200. The exterior coating shall be applied as to achieve a total dry film thickness of 80-125 mils. The exterior surface shall be clean and dry prior to application of the coating.

k) All bolted connections, including pipe flanges, inside the wet well shall be made using stainless steel bolts, nuts, and washers.

l) An aluminum handrail shall be provided around the wet well opening of all submersible pumping stations. The handrail shall be closed on three sides, with the fourth side closed by a latching chain. The handrail shall be permanently attached to the concrete cover slab. The chained side of handrail shall face the chain link fence gates for access and pump maintenance. A minimum horizontal clearance of 10 feet between the chains and handrail is required. Hand rails shall be grounded to the primary ground on-site.

m) A fall-through prevention system shall be provided with the wet well hatch doors. The system shall be a grate consisting of two leafs made of 6061-T6 aluminum hinged on the same side of the hatch. The grate shall be designed to withstand a minimum pedestrian load of 300 lbs. per square foot. The grate openings shall be 4" x 6" to allow both visual inspection and limited accessibility for maintenance purposes when the grate is closed. The leafs of the grate will pivot on aluminum hinge devices with 316 SS hardware that permit them to rotate upward 90 degrees and automatically lock in place. Aluminum pullrods will be attached to the grate's leafs so the operator is positioned with the grate between him and the hatch's opening whenever he raises a leaf. Each grate leaf will have a rod made from 316 SS that automatically engages to secure the leaf in its open position, and can be lifted upward to permit the grate leaf to close. The hatch cover will not be able to shut until the grate is closed, thereby insuring the grate is in position when the next operator opens the hatch cover. The grate shall have an OSHA safety yellow finish to increase visual awareness of the safety hazard.

3. Valve/Meter Vaults

a) The valve/meter vault shall, at a minimum, consist of a precast concrete manhole base section at least 6 feet in diameter, or a cast in place concrete, custom built section, or a precast concrete rectangular structure at least 6 feet square. The valve/meter vault shall be complete with a drain that goes to the wet well or where a gravity drain cannot be included, a sump with a minimum ½ hp mercury float switch activated sump pump discharging to the wet well. The vault shall include an access ladder attached to the vault wall, and access cover cast in the top slab with an extendable/retractable grab bar. The drain pipe between the valve vault and the wet well shall have a back water valve at the wet well end. The access cover for the valve vault shall be a square lockable hatch of 1/4 inch aluminum diamond pattern plate with steel hinges on an aluminum frame cast in place in the cover slab. All access covers shall be centered over equipment to accommodate service and removal and includes a removable metal grate style fall protection guards. Stainless steel or galvanized pipe stands shall be used to support valves and other appurtenances requiring support.

4. Manholes

a) Any manholes installed on the pump station site need to meet the standards described in Section 0700 of the Town of Apex Standard Specifications. All manholes installed on the pump station site shall receive an interior coating of an approved epoxy resin, as previously specified for the pump station wet well. All manholes located within the 100 year flood elevation shall receive an exterior coating as specified in Section 0700.

5. Buildings

   a) Building systems to house chemical feed facilities shall be adequate to provide sufficient storage, clearance, and full containment of chemicals in the event of a chemical tank or other failure. A removable roof or roof sections shall be required to allow sufficient access to all equipment and tanks within the building. All supplementary or miscellaneous items, appurtenances, and devices incidental to or necessary for a sound, secure, and complete installation shall be designed and sealed by a NCPE. Chemical feed delivery lines will be chemical resistant and of a flexible material routed through oversized schedule 80 conduit

   b) On a case by case basis, a building may be required to house all electrical and control equipment. This building shall be of precast, prefabricated, or built in place construction.

   c) All buildings located on a pump station site shall have the first floor elevation a minimum of 2 feet above the 100 year flood elevation.

   d) Buildings shall be heated to avoid the freezing of chemicals.

## D. Piping and Valves

1. Piping: Suction and discharge piping shall be Class 50 ductile iron flanged pipe in accordance with AWWA C 115. Discharge piping and valves shall produce a minimum head loss while maintaining a minimum velocity of 3 feet per second. All exposed piping shall have adequately sized and located restraint.

2. Pump piping: The discharge connection elbow shall be a straight through fitting with no flap valve and shall be permanently installed in the wet well along with the discharge piping. The pumps shall be automatically connected to the discharge connection elbow when lowered into place. The entire weight of the pump shall bear upon the guides and base support with no part of the pump bearing directly on the floor of the wetwell. A stainless steel chain shall be provided for lifting each pump from the wet well. All hardware used shall be 316 stainless steel.

3. All piping, couplings, fittings, valves, etc. shall be Class 125 for flanges meeting ANSI B16.1, unless Class 250 flanges are required for high head installations.

4. Check Valve: An external weight spring loaded or air-cushioned or hydraulic loop check valve and a plug valve shall be provided for the discharge pipe of each pump. A 1/4 turn plug valve shall be provided on the discharge pipe from the valve vault (the beginning of the force main). Check valves shall be ductile iron bodied, fully bronze mounted with bronze clapper disc and bronze seat ring, and shall have a spring loaded lever arm capable of being mounted on either side of the valve.

Check valves and plug valves shall be mounted in the horizontal position with a minimum of 3 feet of separation between each valve body and the outside walls. All valves shall be centered on the vault door for maintenance access and valve removal.

5. Plug Valve: Plug valves shall be 1/4 turn, eccentric action and resilient plug facing with heavy duty stainless steel bearings and welded-in corrosion resistant nickel seat. Pump station plug valves shall be "full-port" cross-sectional area perpendicular to the flow of at least 100% of the adjoining pipe.

   Plug valves and check valves on the discharge side of each pump shall be located in a valve vault separate from and adjacent to the wet well. A Victaulic type coupling shall be installed on each discharge main between the wet well and the valve vault. An isolation plug valve shall be installed downstream approximately 50-feet from the valve/meter vault in order to isolate the force main from the vault and equipment. Valves shall be rated for a minimum of 175 psi working pressure and be able to pass a 3-inch solid

6. Pressure gauge: A +/- 2% accuracy pressure gauge with a 3 inch or larger liquid filled dial, stainless steel case, and graduated to 150% of force main static pressure shall be provided on each discharge pipe. The gauge shall be installed between the check and plug valves. Isolation seals and cut-off ball valve shall be provided between the gauge and force main. The gauge shall be oriented so that it is easily visible and legible from the valve vault hatch opening. The gauge shall also be capable of delivering an electronic remote signal compatible with SCADA.

7. Air Release Valve: Each pump shall have an air release valve, installed on the discharge prior to combining with other pumps and leaving the valve vault. Air release valves shall be installed in manholes outside of the valve vault.

   There shall be one additional air release valve installed in a manhole on the force main, prior to the main leaving the pump station site.

8. Surge Valve: There shall be one surge valve installed within the valve vault.

9. Flow Meter: A full size electromagnetic flow meter shall be installed in a manhole or vault on the discharge side of the valve vault.

10. Trash Basket:

    A. Each pump station shall have one aluminum trash basket with guide rails with the following requirements:
       1. Basket shall have bar screen on the front and bottom with a minimum 1-1/4 inch to maximum 2 inch clear opening between 1/4-inch thick bars. The sides of the basket may be solid.
       2. Basket shall have a minimum of four solid aluminum wheels with stainless steel axles for easy removal from wetwell on aluminum guide rail system.

Guide rail system shall not be provided with ladder rungs. Provide basket stop bar for installation in field to insure proper location of basket.

3. Minimum dimensions: 2 inches wider than OD of influent pipe, 18 inches deep, and 18 inches high. Influent pipe must be able to pass through guide rails to influent face of basket.

11. Anchor Bolts.

a) Anchor bolts and nuts shall be furnished as required for each item of equipment. Anchor bolts, together with templates or setting drawings, shall be delivered sufficiently early to permit setting the anchor bolts when the structural concrete is placed. Anchor bolts shall be at least 3/4 inch in diameter. Anchor bolts and associated hardware shall be 316 stainless steel.

b) Anchor bolts shall be accurately located and centered in pipe sleeves having an inside diameter approximately 2.5 times the bolt diameter and a length approximately 8 times the bolt diameter. A square anchor plate with thickness of approximately 0.5 the bolt diameter and side dimensions 4 times the bolt diameter shall be welded to the bottom of each sleeve, with the anchor bolt extended through the plate and welded thereto. Two nuts and a washer shall be furnished with each anchor bolt.

c) Anchor bolts shall be long enough to accommodate 1.5 inches of grout beneath the baseplate and to provide adequate anchorage into structural concrete. Bolts shall have a "J" bend anchoring them into the concrete.

d) Anti-seize compound will be applied to the threads of all stainless steel bolts before assembly.

## E. Electrical - General

1. All electrical systems associated with any of the items covered under this section shall meet all applicable electrical standards and code requirements, including, but not limited to: ANSI, ASTM, NEMA, IEEE, DEMA, EEI, HEI, ISO, NFPA, SAE, NEC, UL508, as well as any other federal, state, or local codes.

2. Electrical service to all pump stations shall be appropriately sized three phase power, 240 VAC with automatic transfer switches to automatically starting on-site emergency generators. The electrical power entrance shall be through a meter base, followed by a NEMA 3R heavy duty, single throw, and fusible safety switch. This shall be followed by a heavy duty automatic transfer switch that transfers between the utility power and the on-site generator. This shall be followed by a NEMA 3R heavy duty, double throw, three pole safety switch which feeds the control panel from one side and heavy duty, circuit breaking 4 wire, 4 pole male receptacle assembly as manufactured by Crouse-Hinds or other approved equal

from the other side. There shall be a NEMA 3R heavy duty single throw fusible safety switch between the generator and the automatic transfer switch.

3. Electrical equipment inside the wet well shall meet the requirements for Class I, Division I, and Group C/D service.

4. All of these electrical components shall be suitably sized to be capable of service with all electrically powered equipment running.

5. All electrical components, including panels, shall be sealed off from the wet well in accordance with the N.C. Electrical Code requirements for electrical service to class 1 division 1.

6. The use of rigid conduits is required. Generally, PVC shall be used below ground and PVC coated galvanized steel shall be used above ground. Conduits that lead to a control panel shall be air gapped a minimum of 3-feet from the panel or seal-offs shall be provided.

7. Pump station electrical and control equipment shall be located in a building as described above, or under a weatherhood. An aluminum weatherhood with a clear height of 7 feet, an overhang of at least 4 feet and a thickness of 3/16 inch shall be provided for control equipment exposed to the weather. The back panel and side panel shall also be 3/16 inch thick aluminum. The support structure for the weatherhood shall be made from structural steel members assembled to provide individual, direct support to the control equipment panel, transfer switch, safety switches, meter base and the weatherhood. The steel frame shall be painted with a two component, high build epoxy polyamide paint system designed for severe service. All weatherhoods shall be provided with a light and GFI protected 120V outlet.

8. All electrical equipment, including non-submersible motors, electrical panels, control panels, alarm/telemetry systems, backup generators, etc., shall be located a minimum of 2 feet above the 100 year flood elevation. Weatherhoods shall be installed to eliminate runoff to the front side. All electrical enclosures shall have hinged doors/covers. The control panel shall include a concrete pad, minimum 8’ x 4’ x 6” thick.

9. An intermediate terminating explosion proof junction box is to be supplied and installed mid-way from the wet well and the pump control panel. This box shall be NEMA type 4X suitably sized to house all pump power and control wiring. Rigid metal conduit shall be utilized with the necessary seal-off fittings. Terminal strips shall be provided to properly split the power termination to facilitate pump removal from the junction box and not the pump control panel.

   Exposed outlet boxes for outdoor and indoor wet process areas used for lighting fixtures, switches, and receptacles shall be aluminum provided with rubber

neoprene gasketed covers of similar metal. Junction and pull boxes shall be NEMA 4X construction and of ample size to house the required devices. Boxes shall be provided with hasps.

The minimum size of boxes shall be according to the NEC. No box shall be filled to more than 40% of capacity.

Where control wires must be interconnected in a junction box, terminal strips consisting of an adequate number of screw terminals shall be installed. Current carrying parts of the terminal blocks shall be of ample capacity to carry the full load current of the circuits connected. Approximately 20 % of the terminals provided shall consist of spare terminals. Terminals shall be lettered and/or numbered to conform with the wiring diagram.

## 803 Pump Station Equipment

## A. Pumps

1. General

a) Pumps, motors, and major accessories shall be supplied by a single manufacturer and must be Fairbanks Morse, ABS, Hydr-o-matic, or HOMA.

b) Each pumping unit shall be complete with a close-coupled, submersible electric motor, and all other appurtenances specified, or otherwise required for proper operation.

c) The equipment provided under this section shall be suitable for the service conditions and shall be capable of meeting all operating requirements of the pumping system.

d) Each pumping unit including motor and all integral controls shall be rated and labeled for use in a Class 1, Division 1, Group C/D area as defined by the National Electric Code.

e) Each item of equipment and each part shipped separately shall be identified with indelible markings for the intended service. Tag numbers shall be clearly marked on all shipping labels and on the outside of all containers.

f) Abbreviations. Reference to standards and organizations herein shall be as indicated by the following designations.

| | |
|---|---|
| 1)AFBMA | Antifriction Bearing Manufacturers Association |
| 2)AGMA | American Gear Manufacturers Association |
| 3)AISI | American Iron and Steel Institute |
| 4)ANSI | American National Standards Institute |

5)ASME American Society of Mechanical Engineers
6)ASTM American Society of Testing and Materials
7)NPT National Pipe Thread
8)SAE Society of Automotive Engineers

2. Submittals

a) Complete fabrication and assembly drawings, together with detailed specifications and data covering materials, parts, devices, and accessories forming a part of the equipment furnished, shall be submitted in accordance with the submittals section. The data and specifications for each unit shall include, but not be limited to, the following:

1)Pumps
1) Name of Manufacturer
2) Type and model
3) Rotating speed
4) Direction of rotation
5) Size of suction elbow inlet
6) Size of discharge elbow outlet or nozzle
7) Net weight (mass) of pump and motor only
8) Complete performance curves showing capacity versus head, bhp (brake kW), NPSH required, and efficiency
9) Data on shop painting

2)Motors
1) Name of manufacturer
2) Type and model
3) Type of bearings and method of lubrication
4) Rated size of motor, hp (kW), and service factor
5) Insulation class and temperature rise
6) Full load rotative speed
7) Net weight
8) Efficiency at full load and rated pump condition
9) Full load current
10)Locked rotor current

b) Operation and Maintenance Manuals shall include, at a minimum, the following information:

1) Equipment function, normal operating characteristics, and limiting conditions.

2) Assembly, installation, alignment, adjustment, and checking instructions.

3) Operating instructions for startup, routine and normal operation, regulation and control, shutdown, and emergency conditions.

4) Lubrication and maintenance instructions.

5) Guide to troubleshooting.

6) Parts lists and predicted life of parts subject to wear.

7) Outline, cross-section, and assembly drawings; engineering data; and wiring diagrams.

8) Test data and performance curves.

3. Quality Assurance

a) Performance and Balance Requirements

1) All specified conditions shall be at rated speed unless otherwise indicated.

2) Overall (wire-to-water) efficiency for constant speed pumps shall include losses in the pump and motor. Overall (wire-to-water) efficiency for variable speed pumps shall include losses in the pump, motor, adjustable frequency drive, and any transformers supplied as part of the adjustable frequency drive equipment.

3) The minimum hydrostatic test pressure shall be 1.5 times shutoff head plus max suction pressure.

4) Pump performance shall be stable and free from cavitation and noise throughout the specified operating head range at minimum suction submergences. The design running clearance between the impeller inlet and the casing wearing ring (if provided) shall be not less than 0.01 inch or 1 mil per inch of casing wearing ring diameter, whichever is greater.

5) When required, pumping units shall be designed so that maximum reverse rotation due to reverse flow at the head as required will not cause damage to any component. Pump supplier shall coordinate this provision with the motor supplier.

6) All rotating parts shall be accurately machined and shall be in as nearly perfect rotational balance as practicable. Excessive vibration shall be sufficient cause for rejection of the equipment. The mass of the unit and its distribution shall be such that resonance at normal operation speeds is avoided. In any case, the unfiltered vibration velocity, as measured at

any point on the machine including top of motor, shall not exceed the maximum velocity as indicated for vertical, end suction, solids handling pumps. At any operating speed, the ratio of rotative speed to the critical speed of a unit or its components shall be less than 0.8 or more than 1.3.

4. Materials

   a) Stator housing, oil chamber housing, impeller casing, and impeller shall be cast iron, ASTM A48.

   b) Casing wearing ring shall be bronze, ASTM B62, or rubber, or martensitic stainless steel, Brinell 300+.

   c) Bottom wearing plate shall be cast iron, ASTM A48 with spiral grooves.

   d) Impeller wearing plate shall be martensitic stainless steel, Brinell 200-250.

   e) Shaft shall be alloy steel, hard chrome plated, or martensitic stainless steel, AISI type 416.

   f) Mechanical seals shall be 2 tandem single type, oil lubricated with silicon or tungsten carbide seal rings at all points, except the upper rotating seal, which shall be carbon.

   g) Discharge base shall be cast iron or fabricated steel.

   h) Guiderails shall be stainless steel pipe, ASTM A312, Schedule 40S.

   i) Upper guiderail bracket, cable hooks, and chain hooks shall be AISI type 304 stainless steel.

   j) Pedestal base shall be cast iron or fabricated steel.

5. Pumps

   a) Pumps shall be submersible, non-clog centrifugal sewage pumps capable of passing a 3 inch sphere. Pumps shall be capable of handling raw, unscreened sewage. Major pump components shall be of gray cast iron devoid of burrs, pits or other irregularities.

   b) The impeller casing shall have well-rounded water passages and smooth interior surfaces free from cracks, porosity, blowholes, or other irregularities. The discharge nozzle shall be flanged, with dimensions and drilling conforming to ANSI B16.1, Class 125. The discharge nozzle shall be flanged and sufficiently rigid to support the pumping unit under all operating conditions.

c) The impeller shall be a semi-open and enclosed recessed one-piece casting with not more than two nonclog passages with the impeller completely out of the flow path. The interior water passages shall have uniform sections and smooth surfaces and shall be free from cracks and porosity. The impeller shall be dynamically balanced and securely locked to the shaft by means of a key and self-locking bolt or nut.

d) For pumping units 20 hp and larger, renewable wearing rings shall be provided in the casing and on the impeller. The rings shall be positively locked in place. For pumping units less than 20 hp a renewable wearing ring or axially adjustable wearing plate shall be provided in the casing. Casing wearing ring shall be securely fastened to the impeller casing front cover to provide either an axial or radial running clearance. Axially adjustable wearing plate shall be arranged to permit adjustment of the axial running clearance between the impeller and plate. The wearing plate shall have an outward spiraling groove designed to force stringy solids outward and away from the impeller.

e) The oil chamber shall contain a drain plug and a vent plug. Food grade oil shall be used.

f) Each pump shall be provided with two mechanical rotating shaft seals arranged in tandem and running in an oil chamber. Each interface shall be held in contact by an independent spring system designed to withstand maximum suction submergence. The seals shall require neither maintenance nor adjustment and shall be readily accessible for inspection and replacement. Shaft seals lacking positively driven rotating members or conventional double mechanical seals which utilize a common single or double spring acting between the upper and lower units and requiring a pressure differential to offset external pressure and effect sealing, will not be acceptable. The seals shall not rely upon the pumped media for lubrication and shall not be damaged if the pumps are run unsubmerged for extended period while pumping under load.

g) All mating surfaces of major components shall be machined and fitted with O-rings where watertight sealing is needed. Sealing shall be accomplished by O-ring contact on four surfaces and O-ring compression in two planes, without reliance on a specific fastener torque or tension to obtain a watertight joint. The use of elliptical O-rings, gaskets, or seals requiring a specific fastener torque value to obtain and maintain compression and watertightness will not be acceptable. The use of secondary sealing compounds, gasket cement, grease, or other devices to obtain watertight joints will not be acceptable.

6. <u>Pump Motors</u>

a) The pump motors shall be sealed submersible type, and shall be appropriately sized three phase power, 60 Hertz motors with a maximum speed of 1800 RPM. The motors shall meet the U.S. requirements of Class I, Division I, and

Group D for hazardous locations, and shall be sized to non-overloading throughout the entire operating range of the pump.

b) A heat sensor thermostat shall be attached to and embedded in the winding and be connected in series with the motor starter contactor coil to stop motor if temperature of winding is more than 220 degrees F. Thermostat shall reset automatically when motor cools to safe operating temperature. The common pump motor shaft shall be of 416 stainless steel. (See 4E)

c) The motor shall be protected by mechanical seal system as described above. A double electrode shall be mounted in the seal chamber to detect any water entering the chamber through the lower seal. Water in the chamber shall cause a red light to turn on at the control panel. This signal shall not stop the motor but shall act as a warning only.

d) Power cables to pumps shall be AWG (min) hypalon jacketed type SPC cable a minimum of fifty (50) feet in length.

e) Motors shall be provided by the pump manufacturer and shall be air-filled, totally submersible. Motor nameplate rating shall exceed the maximum power required by the pump in the operating head range. Each motor shall have a voltage, frequency, and phase rating as required and shall have a service factor of 1.15. The stator housing shall be an air-filled, watertight casing. A cooling jacket shall encase the motor housing for each pump where needed to maintain adequate cooling. Cooling jacket shall require no external source of cooling water. Motor insulation shall be moisture resistant, Class F, 180 degrees Celcius. Each motor shall be NEMA Design B for continuous duty at 40 degrees Celcius ambient temperature, and designed for at least 10 starts per hour.

f) Each motor housing shall be provided with a moisture detection system provided by the motor manufacturer and per the manufacturer's requirements, complete with all sensors, control power transformer, intrinsically safe control modules, and relays. The moisture detection system shall be rated for a 120V AC supply. The moisture detection system shall provide two normally open dry output contacts rated 5 amps at 120 volts AC. The contacts shall close when moisture is detected in the motor housing and an alarm relay energized. The pump shall not be shut down. All moisture detection system components shall be furnished by the pump supplier and shall be shipped loose for installation into the motor controller enclosure, or if required to be mounted separately all components shall be mounted in a NEMA 4 stainless steel enclosure.

g) The motor bearings shall be antifriction, permanently lubricated type. The lower bearing shall be fixed to carry the pump thrust and the upper bearing free to move axially. The bearings shall have a calculated AFBMA L10 Live Rating of 40,000 hours when operating at maximum operating head. Maximum shaft

runout at the mechanical seals shall not exceed 2 mils at any point in the operating head range.

h) Thrust bearings shall be protected by bearing temperature switches. The switches shall be normally closed automatic reset type rated 5 amps at 120V AC.

i) Each motor shall be capable of continuous operation in air (unsubmerged) for at least 24 hours under pump full load conditions, without exceeding the temperature rise limits for the motor insulation system.

j) Each pump shall be equipped with one or more multiconductor cable assemblies for power and control. Each multiconductor assembly containing power cables shall be provided with a separate grounding conductor. Each cable assembly shall bear a permanently embossed code or legend indicating the cable is suitable for submerged use. Cable sizing shall conform to NEC requirements.

k) All cables shall be of sufficient length to terminate in a junction box outside the wetwell as indicated on the drawings, with 10 feet of slack that shall be coiled on a cable hook at the top of the wetwell. Each cable shall be supported by AISI Series 300 corrosion-resistant PVC Style woven Kellem Grips type woven grips to prevent damage to the cable insulation. Mounting of cable supports in the wetwell shall be coordinated to prevent damage to the cable.

l) The cable entry water seal shall include a strain relief and a grommet type seal designed so that a specific fastener torque is not required to ensure a watertight submersible seal. The cable entry junction box and motor shall be separated by a stator lead sealing gland or a terminal board. The junction box shall isolate the motor interior from moisture gaining access through the top of the stator housing.

m) Motors with an adjustable frequency type speed controller shall be derated to compensate for harmonic heating effects and reduced self-cooling capability at low speed operation so that the motor does not exceed Class B temperature rise when operating in the installed condition at load with power received from the adjustable frequency drive. All motors driven by adjustable frequency drives shall be supplied with full phase insulation on the end turns and shall meet the requirements of NEMA MG 1, Part 31. In addition to the requirements of NEMA MG 1, Part 31, motors shall be designed to be continually pulsed at the motor terminals with a voltage of 1600 volts ac.

n) Adjustable Speed Drives: Adjustable frequency drives shall be provided as specified by the Director of Water Resources or if the projected flow is .5MGD or higher.

o) Station pumps between 15-30 hp shall have a 30 hp rated RVSS. Stations with pumps greater than 30 hp shall utilize variable frequency drives with appropriately sized RVSS.

7. Appurtenances

a) The lift out systems shall consist of a straight elbow that bolts to the bottom of the basin, a combination disconnect assembly with a seal flange that mounts to the pump, rail support guides that fasten to the wall of the basin and guide and support brackets that mount to the pump. The guide rails shall be type 316 stainless steel, 2 inch minimum diameter, schedule 40

b) Guiderail Mounted Base. A discharge base and discharge elbow shall be furnished by the pump manufacturer. The base shall be sufficiently rigid to firmly support the guiderails, discharge piping, and pumping unit under all operating conditions. The base shall be provided with one or more integral support legs or pads suitable for bolting to the floor of the wetwell. The face of the discharge elbow inlet flange shall be perpendicular to the floor and shall make contact with the face of the pump discharge nozzle flange. The diameter and drilling of the elbow outlet flange shall conform to ANSI B16.1, Class 125. The pump and motor assembly shall be automatically connected to and supported by the discharge base and guiderails so that the unit can be removed from the wetwell and replaced without the need for operating personnel to enter the wetwell.

c) Sliding Bracket. Each guiderail mounted pumping unit shall be provided with an integral, self-aligning guiderail sliding bracket. The bracket shall be designed to obtain a wedging action between flange faces as final alignment of the pump occurs in the connected position. The bracket shall maintain proper contact and a suitably sealed connection between flange faces under all operating conditions. The sliding bracket shall be non-sparking.

d) Guiderails. Each guide rail mounted pumping unit shall be equipped with one or more guiderails. Guiderails shall be sized to fit the discharge base and the sliding bracket and shall extend upwards from the discharge base to just below the bottom of the access hatch. An upper guiderail bracket shall be provided at the pump access opening. Guiderails shall be made of stainless steel.

e) Lifting Chain. Each guide rail mounted pumping unit shall be provided with a chain suitable for removing and installing. The chain shall be stainless steel with 4x6 lifting eyes at 10ft intervals starting at the top. A suitable chain hook shall be provided at the top of the wetwell. A stainless steel cable is not an acceptable alternative to a lifting chain.

f) Special Tools and Accessories. Equipment requiring periodic repair and adjustment shall be furnished complete with all special tools, instruments, and

accessories required for proper maintenance. Equipment requiring special devices for lifting or handling shall be furnished complete with those devices.

g) A replica of the nameplate with serial number, model number, manufacturer, operating conditions, etc. shall be provided for each pump.

8. Shop Painting

a) All iron and steel parts which will be in contact with pumped liquid or submerged after installation, including the inside of the casing, the impeller, and the discharge elbow, shall be shop cleaned in accordance with the coating manufacturer's recommendations and painted with the epoxy coating system specified. The coating shall have a dry film thickness of at least 10 mils and shall consist of a prime coat and one or more finish coats. At least 1 quart of the finish coat material shall be furnished with each pump for field touchup.

b) All other iron and steel surfaces, except stainless steel and machined surfaces, shall be protected with suitable protective coatings applied in the shop. Surfaces of the equipment that will be inaccessible after assembly shall be protected for the life of the equipment. Exposed surfaces shall be finished, thoroughly cleaned, and filled as necessary to provide a smooth, uniform base for painting. Electric motors, speed reducers, starters, and other self-contained or enclosed components shall be shop primed or finished with an oil resistant enamel or universal type primer suitable for top coating in the filed with a universal primer and aliphatic polyurethane system.

c) Surfaces to be coated after installation shall be prepared for painting as recommended by the paint manufacturer for the intended service, and then shop painted with one or more coats of the specified primer.

## B. Pump Control Systems

1. All components of the Pump Control Systems shall be properly designed and installed to meet all NEC and other industry standards, as well as all federal, state, and local requirements. Power service to wastewater pumping stations shall be 3-phase.

2. Submittals: Complete fabrication and assembly drawings, together with detailed specifications and data covering materials, parts, devices, and accessories forming a part of the equipment furnished, shall be submitted in accordance with the submittals section. The data and specifications for the Control Panel and Components shall include, but not be limited to, the following:

    1) Name of acceptable manufacturer, Square D, Cutler Hammer, or ABS
    2) Type and model

3) Enclosure rating
4) Dimensions of complete panel
5) Electrical schematics and wiring diagram
6) Liquid level sensors with mounting details and cable lengths, and pump controls
7) Published descriptive data on each item of equipment and all accessories, indicating all specific characteristics and options.

3. Enclosure: The Control Equipment Enclosure shall be a NEMA type 4X fiberglass and be of suitable size to house all components. A locking hasp shall be provided with no screw clamp type latches. Enclosure shall be fabricated from fiberglass. The top of the enclosure shall serve as a drip shield and the seam free sides shall prevent rain and sleet from entering. Inner panel shall be made of fiberglass.

4. Hinged Inner Door: An inner door shall be furnished. Overload reset push buttons, circuit breakers, switches pilot lights, and hr. meters shall be the only components accessible with door closed. Door shall be hinged and may be opened when service is required.

5. Line Terminal Block: A terminal block shall be furnished with properly sized line lugs to accept the main power source entering the control panel. Load lugs shall be adequate to accept all required load side wiring requirements. All live parts shall be fully shielded.

6. Motor Circuit Breaker (440-480 VAC): A properly sized, molded case, thermal hydraulic-magnetic circuit breaker or motor protector shall be provided for each pump motor. Line and load sides shall be equipped with lugs properly sized for the horsepower and current rating of the motor(s). The interrupting rating shall be 5,000 RMS symmetrical amps.

7. Transformer Primary Circuit Breaker: A properly sized, two pole, molded case circuit breaker shall be furnished ahead of the control power 120-VAC power transformer for short circuit protection and disconnecting power to the transformer. The circuit breaker shall conform to the Specifications for the motor circuit breaker(s).

8. Control Power Transformer: An industrial quality control transformer shall be furnished to provide control voltage. The transformer shall be furnished to provide more than adequate KVA rating to provide 120-VAC power for all items required in the control and alarm circuits. Transformer shall be protected in its secondary by properly sized supplemental circuit breaker(s).

9. Magnetic Contactors and Overload Relays: A magnetic contactor shall be furnished for each motor. A separate, panel mounted, 3 leg (three phase) overload relay or motor protector shall be supplied for each motor. Each leg of the overload relay shall be equipped with a properly sized overload heater. Electronic overloads are

not acceptable. Contactor and overload relay shall be properly sized for the required horsepower, voltage and phase.

10. Elapsed Time Meters: Six digit, non-resetable elapsed time meters shall be mounted in the control panel enclosure inner door to record the running time of each pump.

11. Condensation Strip Heater with Thermostat: A strip heater shall be furnished to prevent condensation within the control panel enclosure. The heater shall be controlled by a panel mounted, adjustable thermostat.

12. Phase & Voltage Monitor: A phase failure, reversal and under voltage monitor shall be supplied to prevent the motors from running under low voltage, phase loss, or phase reversal conditions. The monitor shall lock out the control circuit until the problem is corrected and automatically reset. The phase and voltage monitor shall be adjustable.

13. Lightning and Surge Suppressors: Suitable lightning and transient level surge suppressors shall be provided to protect motors and control equipment from lightning induced or other line surges. Surge suppressors shall meet current UL standards.

14. Thru - Door Overload Reset Push Buttons: Overload reset push buttons shall be provided for each overload relay. Push buttons shall be mounted so that with inner door closed, overload relays may be reset without entering high voltage compartment.

15. Switches: Heavy-duty industrial grade oil-tight 22mm switches shall be provided for each pump for "Hand/Off/Automatic" operation selection. All switch components shall be made of corrosion resistant metals and polyesters. Contact blocks shall be made of see-through polycarbonate for simplified inspection of contacts. Cams and strokers shall be Teflon impregnated for abrasion free service without lubrication. The switches required shall be as follows:

| Switch Function (Name Plate) | Voltage |
|---|---|
| HOA | 120 VAC |

16. Pilot Lights: Full voltage, push to test, heavy-duty industrial grade oil-tight pilot lights shall be provided. All pilot light components shall be made of corrosion resistant metals and polyesters. An insulated socket shall be furnished to eliminate the possibility of shock during bulb change. Bulb change shall not require removal of the socket. Bulbs shall be “super bright” LED type. Lens shall be 22mm and made of lexan. The pilot lights required shall be as follows:

| Pilot Light Function (Name Plate) | Voltage | Lens Color |
|---|---|---|
| PUMP 1 | 120 VAC | GREEN |
| PUMP 2 | 120 VAC | GREEN |

17. Seal Fail Alarm Circuit with Test Push Button (Required for Submersible Pumps and Motors): The control panel shall be equipped with a conductance actuated control relay that shall respond to current from a moisture sensor in the pump seal chamber. Relay contacts shall be rated at 10 amps minimum. All molded structural parts shall be of high mechanical and dielectric strength, structural dimensionally stable, arc resistant, thermosetting plastic. Base plate shall be high strength, diecast aluminum alloy. Solid state type relays shall not be considered acceptable for seal fail monitoring applications. An amber alarm pilot light shall illuminate upon alarm condition. Each pilot light shall include contacts that shall allow testing of the seal failure circuit and pilot light bulb by pushing. Bulb change shall not require removal of the socket. Bulbs shall be “super bright” LED type.

18. Seal Failure Circuit Test Push Button (Illuminated): Heavy-duty industrial grade oil-tight push buttons shall be provided for each submersible pump motor. All push button components shall be made of corrosion resistant metals and polyesters. An insulated socket shall be furnished to eliminate the possibility of shock during bulb change. Bulb change shall not require removal of the socket. Bulbs shall be “super bright” LED type. Lens shall be 22mm and made of lexan. The push buttons required shall be as follows:

| Push Button Function (Name Plate) | Voltage | Lens Color |
|---|---|---|
| P1 SEAL FAIL | 120 VAC | AMBER |
| P2 SEAL FAIL | 120 VAC | AMBER |

19. Pump Alternator Circuit (For Duplex Pump Operation): The electro-mechanical alternator relay shall be of industrial design specifically for use in pump applications. It shall have single-pole double-throw heavy-duty 10-amp silver cadmium oxide contacts enclosed in a transparent cover. The snap action contacts shall transfer when the unit is de-energized. The circuit shall never be closed or opened while current is being conducted. The alternator circuit shall alternate the lead pump position between the pumps and shall allow the lag pump to start in response to a rising water level in the wet well. A four position switch shall be provided on the exterior of the pump control panel inner door. The switch shall have a position for: Pump 1, Pump 2, or Both.

20. Control Relay(s): Plug-in control relays with 120-VAC coils shall be provided as required. Contact rating shall be 5-amps (minimum). Sockets shall be of the same manufacture as the relays and hold-down clips shall be furnished to prevent relay

from sliding out of the socket. Relays shall have indicator lights showing when they are engaged.

21. High Wet Well Level Alarm: The control panel shall be provided with a suitable alarm circuit, activated by a separate level control. This alarm shall signal a high water condition in the wetwell. Terminals shall be furnished in the control panel for connection of externally mounted alarm devices. A red flashing light shall be provided as a visual alarm of the high water in the wet well condition. A continuous sounding alarm shall also be provided as an audible alarm of the high water in the wet well condition.

22. Liquid Level Controls: Level control will be achieved by means of a corrosion resistant level sensing **Pressure Transducer**. Float-actuated mercury level control switches shall serve as a backup for low level alarm and high level alarm functions. The mercury switch shall be encapsulated in polyurethane foam for corrosion and shock resistance. Level switches shall be weighted to hold desired position in the wetwell. The cord connection to the control shall be numbered 16-2, rated for 13-amps, and shall be type SJTO. To ensure optimum longevity contacts shall be rated for 20-amps at 115-VAC and shall be sealed in a heavy-duty glass enclosure. No junction boxes or cable splices of any kind will be allowed in the wet well. Level elevations shall be set in accordance with design drawings.

23. High Temperature Shutdown Circuit(s): The pump motor high temperature circuit shall provide terminals for connection of the leads from the temperature sensor provided in the pump motor windings. Upon a high temperature condition in the pump windings, the control power to the pump motor contactor shall be disconnected, thus stopping the pump motor. The pump shall automatically restart when the pump motor temperature returns to an acceptable level.

24. Ground Lug(s): Equipment ground lug(s) shall be provided for grounding the enclosure. The ground lug(s) shall be suitable for the service provided the enclosure sized per table 250-95 of the N.E.C. In all cases, the enclosure must be adequately grounded per article 250 of the N.E.C. except for fiberglass enclosures, where a grounding bus shall be provided.

25. Terminals: Terminals shall be provided for connecting mercury float switch leads, temperature sensor and seal fail sensor leads. Terminal blocks shall be rated for 600 volt use and accept a wire range of #22-8. All live parts shall have insulating walls on all sides of the lug. Blocks must be U.S. recognized.

26. Construction Standards: Subpanel shall be drilled and tapped to accept machine thread bolts (self-tapping screws are not acceptable). All control wiring shall be 16-AWG machine tool wire, Carol type 76512 or equal. All control wire shall be color coded or numbered in accordance with applicable standards. Power (motor) shall be in accordance with the current National Electrical Code. Major groups of wires shall be contained in plastic wiring trough equal to Panduit type E.

27. Nameplates: All indicator lights, alarms, selector switches, pushbuttons and major control system components shall be identified with engraved phenolic plastic nameplates, white lettering on a black background.

28. Control Panel: The control panel shall include the following elements:
    a) Separate Manual Disconnect for each pump with 2-pole adjustable overload protection for each phase;
    b) Magnetic starter for each pump motor with all leg quick trip ambient compensated overload protection for each motor. Overloads are to have an auxiliary contact for automatic dialer;
    c) Hand-Off-Auto selector switch for each pump;
    d) Automatic Electric Alternator with ability to designate either Pump 1 or Pump 2 as lead;
    e) Circuit Breaker for Control Circuit;
    f) Motor Thermal protection - Motor control circuit is to shut down if high temperature occurs. Manual resets to be provided;
    g) MPE LPC420-R-RM Level Control Mode;
    h) MPE Level Probe-Mode-LP-10;
    i) Backup float system with 3 floats shall be included as backup to the MPE Level Control;
    j) Test dial shall be provided to allow simulation of wet well level on MPE Control;
    k) ≥ 40 hpw shall be ‘soft start’;
    l) Horn signaling;
    m) Control Disconnect;
    n) Seal failure light for each pump and contact closure for automatic dialer (submersible installations only);
    o) High temperature light for each pump and contact closure for automatic dialer (submersible installations only);
    p) Running light for each pump;
    q) Non-resettable, elapsed time meter for each pump, reading in tenths of hours. Capacity 100,000 hours;
    r) High-level alarm light with Red Globe and contact closure for automatic dialer (remote mounting for “package” pumps station where panel is inside pump compartment);
    s) All necessary internal wiring, relays, etc. to provide the operation as described;
    t) All functions and internal wiring shall be labeled accordingly;
    u) Junction box shall be stainless steel and installed 4 feet above final grade to ensure water does not damage the internal wiring;
    v) Automatic Dialer / Scada;
    w) AC Voltmeter.

## C. Alarm Dialer/SCADA/Telemetry

1. The pump station shall be provided with an alarm dialer in a lockable NEMA 4 enclosure. Hard line dialer units shall have a minimum of eight inputs and capable of additional expansion with battery backup and be the ANTX Dialer Scout or approved equal. The operating environment shall withstand from –5$^{o}$ Fahrenheit to 130$^{o}$ Fahrenheit with a 90% relative humidity, non-condensing. The alarm dialer shall operate on 120-VAC, and shall have a rechargeable battery backup capable of providing 4 hours of standby power with surge protectors on the power and telephone lines. The alarm dialer shall monitor high water conditions and grinder jams through normally open/normally closed contacts, shall have the capability of dialing four phone numbers, and shall work on a standard telephone service. The dialer shall be provided by a manufacturer listed on the design drawings. Seal failure and high temperature signals from all pumps shall be combined into a common “pump trouble” alarm to be transmitted from the dialer.

2. The pump station telemetry units shall be compatible with the Town’s current SCADA system. The Town shall not be required to purchase additional software to operate the telemetry unit.

## D. Grinders

1. <u>General</u>

   a) A wastewater grinder shall be provided at each pump station for the intended purpose of grinding solids in the influent flow to the pump station.

   b) The entire grinder unit and accessories necessary to provide a fully functional wastewater grinder system, shall be supplied and warranted by a single manufacturer. The list of acceptable manufacturers shall be identified on the design drawings.

   c) The wastewater grinder shall be placed in a separate manhole or other influent structure prior to the wetwell, but still within the pump station site. The grinder shall be able to be removed from the influent structure without entering the influent structure by means of a stainless steel guide rail and stainless steel lifting chain with 4x6 lifting eyes at 10ft intervals starting at the top assembly. Another means of solids removal such as a trash basket or bar rack must be provided for installation when the grinder unit is out of service for extended periods.

   d) The wastewater grinder shall be electrically driven. The electric motor shall be a minimum 5 hp, 60 Hz, appropriately sized immersible motor. The motor shall be NEMA Design "B" and TEFC.

e) The wastewater grinder unit will have a complete and separate control panel providing all settings, monitoring, and control options required, as well as the ability to send alarm signals back to the alarm dialer and telemetry system.

f) The equipment shall be installed as recommended by the manufacturer, and in compliance with all OSHA, local, state and federal codes and regulations.

g) The grinder unit power supply shall match the pump station power supply. Standard pump station power supply is 3 phase AC power.

h) Identification. Each unit of equipment shall be provided with a corrosion resistant substantial metal nameplate, securely affixed in a conspicuous place. Nameplate information shall include equipment model number, serial number, manufacturer's name and location, and important performance data.

2. Submittals

Submittals shall include electrical wiring diagrams complete for field wiring, terminal identifications, and control panel schematics. Electrical and control information shall be provided to allow coordination of field wiring to place the system in the desired operation. Submittals shall also include complete mounting and installation instructions, including size, length and spacing of all supports and anchor bolts. Submittals shall include painting instructions.

3. Quality Assurance

a) All equipment shall meet the requirements of the following standards:

1) ASTM A536-84 - Standard Specifications for Ductile Iron Castings
2) ASTM A36 - Standard Specifications for Carbon Steel Plate
3) AISI 304 - Stainless Steel
4) AISI 4140 - Heat Treated Hexagon Steel
5) AISI 4130 - Heat Treated Alloy Steel
6) AISI 1018 - Carbon Steel
7) 45-50 Rockwell C
8) National Electrical Manufacturers Association (NEMA)
9) National Electrical Code (NEC)
10) Underwriters Laboratory (UL and cUL)

b) Qualified manufacturers shall have a minimum of 5 years experience in the manufacturing of grinding and controlling equipment and a minimum of 20 installations at equivalent applications. Manufacturer shall submit a listing of names and dates of installations for verification by the Town of Apex Water Resources Department.

c) System Controls.

1) Each grinder system shall be provided with a single control panel suitable for mounting on an electrical rack, building wall, or as a secondary panel located under the weathershield. The control panel shall include all power and control circuits to provide the functional requirements specified herein.

2) A programmable controller shall be included in the panel. The programmable logic controller shall talk directly with the SCADA PLC without a third party communication device. Upon the grinder encountering a jam or overload condition, the controller shall stop the grinder and screen and reverse their direction of rotation to clear the obstruction. If the jam is cleared, the controller shall return to normal operation. If the jam condition persists, the controller shall repeat the reversing cycle up to eight additional times within 45-seconds (total of nine cycles) before signaling a grinder overload condition. Upon a grinder overload condition, the controller shall shut down the grinder and screen and activate an overload contact.

3) If a power failure occurs while the grinder is running, the grinder shall resume running when power is restored. A 0-60 second adjustable time delay device shall be included in the control panel to select time delay until restart after power restoration. If the grinder is stopped due to an overload condition and a power failure occurs, the overload indicator shall reactivate when power is restored.

4) The control panel shall provide overcurrent protection. The overload relay shall be adjustable so that the range selected includes the FLA rating and service factor. Grinder control panel shall be positioned either under the weather shield at the electrical riser or in the control building if included. A standalone control panel will not be accepted.

5) The control panel shall be equipped with a Hand-Off/Reset-Auto (HOA) selector switch. In the Off/Reset position, the motor shall not run. In the Hand position, the motor shall run continuously. In the Auto position, the grinder shall stop and start by remote control signal. The control panel shall include dry contacts for future addition by others of a remote maintained contact start/stop control signal when in Auto mode. The control panel shall not allow remote resetting of overload condition. Overload reset shall be accomplished by switching the HOA switch to the Off/Remote position.

6) The controller shall indicate each of the following statuses with an indicator light on the panel face:
    1) Power On
    2) Grinder Overload
    3) Motor Overload
    4) Run

7) Engraved phenolic laminate plastic identification nameplates, with white letters on black background, shall be provided for each switch, indicator light, gauge, etc. on the control panel and in the system.

8) The controller shall be properly rated three phase power, 60 Hertz.

9) A single enclosure shall house all power and control devices, relays, terminal blocks and motor starter. Control and indicating devices shall be mounted in the front of the enclosure. Indicating lights shall be integral transformer type with low voltage long life 6-volt lamps. Lamps and selector switches shall be heavy duty type. The control panel and all control devices shall be NEMA 4X. Enclosure shall be a NEMA 4X fiberglass reinforced polymer equipped with full hinged door, suitable for exterior mounting as shown on the drawings.

10) A lockable disconnect switch shall be provided on the outside of the control panel to disconnect power to the entire grinder system.

11) One set of normally open (NO) contacts shall be provided in the control panel for remote indication of each of grinder “fail” and grinder “run” status. Grinder overload, motor overload, oil overtemperature, low oil level and oil pressure alarms shall be ganged together to a common grinder “fail” alarm. The control panel shall provide 120 VAC power to these alarm circuits for remote indication at an existing alarm dialer system.

12) Contacts shall be provided for a future remote maintained contact emergency stop pushbutton, to be provided by others. These contacts shall be jumpered.

13) Motor starter shall be full voltage type with 120-volt operating coil and captive terminal screws. Overload relay shall be mounted directly to the contactor. The relay shall be sized to the motor full load amperage (FLA).

14) Control panel shall incorporate a manual momentary or spring return reversing switch for grinder control.

d) Spare Parts

1) The following spare parts shall be provided for each grinder as a minimum:
    1) Three (3) of each type of fuse found in the system
    2) Three (3) of each type of lamp bulb found in the system

2) The motor controller shall have sufficient space within its enclosure for the storage of motor controller spare parts. Grinder spare parts shall be packaged in suitable containers for long term storage and shall bear labels

clearly designating the contents of each package and the equipment for which they are intended.

## E. Generators

1. General

a) Backup power shall be provided by an automatically starting on-site generator controlled by an automatic transfer switch. The generator shall be capable of supplying all necessary electrical power for complete operation of the pump station in the event of a failure of the electrical feed supplied by the local grid.

b) The entire generator set, switchgear, and accessories necessary to provide a fully functional backup power system, shall be supplied and warranted by a single manufacturer. The standby power generator set shall be Cummins, Kohler, Caterpillar, Generac, or Blue Star.

c) Each engine-generator unit, controls, and transfer switch shall be new and a standard product of a single manufacturer and shall be a packaged type unit, fully shop assembled, wired and tested, requiring no field assembly of critical moving parts.

d) The generator shall be sized to sequentially start and continuously run all pumps, motors, and other electrical equipment at the pump station site. Simultaneous starting of pumps is not required. The pump starting conditions (including delay timers, VFDs, soft starts, reduced voltage starters, etc.) should be verified for the particular site. The kW rating needed for a particular pump station shall be calculated by a licensed professional engineer by the generator manufacturer.

e) The voltage, amps, phase, etc., shall be coordinated with the design of the electrical equipment for the particular site. Generators will be 3 phase, 60 hertz, and capable of multiple voltages through re-strapping.

f) The engine generator set will have a complete and separate control panel mounted inside the generator enclosure providing all settings, monitoring, and control options required, as well as the ability to send alarm signals back to the alarm dialer and telemetry system.

g) Each unit of equipment shall be provided with a corrosion resistant substantial metal nameplate, securely affixed in a conspicuous place. Nameplate information shall include equipment model number, serial number, manufacturer's name and location, and important performance data.

h) If the generator is elevated 30 inches or greater from the existing grade, a walk way with handrails shall be installed for access to all generator components.

i) The engine-generator set supplier shall be an authorized dealer of the engine-generator set manufacturer and shall be fully qualified and authorized to provide service and parts for the engine and generator 24 hours per day, 7 days per week from a location within a 100-mile radius of the installation site.

2. Submittals

a) The Contractor shall submit to the Town of Apex Water Resources Department, complete shop drawings for assembly and installation, together with detailed specification and data covering materials, drive unit, parts, devices and accessories forming a part of the equipment furnished, with the submittals section. The data and specifications for each unit shall include, but shall not be limited to, the following:

1) Manufacturer, model, and type: engine, alternator, enclosure, battery charger and battery, silencer, switchgear, transformer, etc.

2) Listing of standard and optional accessories.

3) Engine output horsepower and efficiency curves at specified conditions.

4) Engine mechanical data including heat rejection, exhaust gas emission data (maximum values at loads of 1/4, 1/2, 3/4, and full for: carbon monoxide (CO) (lb/hr), nitrogen oxides (NOx)(lb/hr), temperature (F), flow (ACFM)), combustion air and ventilation air flows, and fuel consumption at specified conditions.

5) Generator electrical data including temperature and insulation data, winding pitch, cooling requirements, excitation ratings, voltage regulation, voltage regulator, efficiencies, waveform distortion and telephone influence factor.

6) Ratings at specified conditions: engine (net horsepower), engine (maximum performance horsepower bare engine), generator kW at specified power factor, volts, amperes.

7) Overall dimensions (length, width, height) and net weight.

8) Concrete pad recommendation (including size, length, and spacing of all necessary supports and anchor bolts) and layout/stub-up locations for electrical conduits.

9) Wiring diagrams and schematics for the entire system, including the engine control panel, generator breaker, automatic transfer switch, auxiliary transformer, and remote alarm indicators.

10) Calculations or test results showing compliance with specified motor starting and voltage dip requirements.

11) Line circuit breaker rating.

12) Control panel layout, identifying location of all instrumentation being supplied.

13) Operation instructions.

14) Letter from the engine-generator manufacturer confirming that the unit will provide the specified minimum kW rating at the specified design conditions and time duration.

15) Battery sizing calculations.

16) Battery charger sizing calculations.

17) Maximum output short circuit kvA available.

18) A certificate of compliance, when required.

19) Manufacturer's and dealer's written warranty.

3. Quality Control

a) Except where modified or supplemented by these Specifications, all equipment and materials shall be designed and constructed in accordance with the latest applicable requirements of the standard Specifications and codes of ANSI, ASTM, NEMA, IEEE, DEMA, EEI, HEI, ISO, NFPA, SAE, NEC, UL508, and other such regularly published and accepted standards as well as state and local codes.

4. Generator Equipment

a) Engine.

1) Engine shall be compression ignition type diesel, propane, or natural gas powered. Diesel fueled generators may be considered on large installations and shall be 4 stroke, liquid cooled, American made, with a minimum of 130 HP, or equal. Propane and natural gas fueled generators shall be specified on all small (less than 50 kW) stations. Any variance to this requirement shall be approved by the Water Resources Director.

2) Engine shall operate at an RPM of no more than 1800.

3) The engine will be equipped with an electronic governor to maintain 4% droop from no load to full load and +/-0.25% steady state. The electronic governor control shall be furnished as a complete governor and control package.

4) Engine shall have a dry type air cleaner, coolant, fuel filters, and oil filters with replaceable elements.

5) Engine shall be liquid cooled and shall have a radiator, coolant pump, thermostat, and fan. Air cooled engines may be approved by the Town for installation of less than 10 kW.

6) Governor shall be mechanical flyweight type with a speed regulation of 5 percent maximum.

7) Lubrication shall be by a positive displacement lube oil pump with positive pressure lubrication to all bearings. Full flow lube oil filter shall be provided.

8) Starting system shall be 12 volts, 35 amps with solid state voltage regulator. A battery float charger shall be provided.

9) An engine block heater shall be provided with control thermostat. The unit shall be 120 volt.

b) Generator.

1) The synchronous generator shall be a single bearing, self-ventilated, drip-proof design in accordance with NEMA MG 1 and directly connected to the engine flywheel.

2) Voltage regulation shall be within +/-0.5% at steady state from no load to full load. The momentary voltage drop shall not exceed the specified percent without starter coils dropping out or stalling the engine at any time when applying or starting the specified loads. Recovery to stable operation shall occur within 2 seconds. Unit shall be capable of adjusting voltage under varying load conditions within 16 milliseconds.

3) The voltage regulator shall be a totally solid state design, and include electronic voltage buildup, volts per hertz regulation, overexcitation protection, shall limit voltage overshoot on startup, and shall be environmentally sealed.
4) The insulation material shall meet NEMA standards for Class H insulation and be fungus resistant.

5) The generator shall be a self-excited generator type. The excitation system shall be of brushless construction.

6) The generator shall be supplied with a 240V single phase anti-condensation heater protected by a circuit breaker inside the main control panel. When the generator set is not running the heater is automatically connected to the AC supply through a power relay mounted in the control panel. Upon receiving a start signal the AC supply is automatically disconnected by the power relay and automatically reconnected when the start signal is removed and the engine has stopped. A temperature set point shall determine the start and stop signal.

7) A sound retention enclosure shall be installed rated to a maximum decibel level of 65.

c) Fuel System.

1) Each engine-generator unit shall be furnished with a complete fuel system, including an integral fuel tank, fuel filter, fuel shut off valve, air filter, pressure regulator (if applicable), and piping along with all other accessories as required for proper operation. All items shall be suitable for the specified fuel and located inside the enclosure above the base plate and serviceable from inside the enclosure. The fuel system shall conform to NFPA 58.

2) The fuel tank shall have a capacity of at least 250 gallons to provide fuel for a minimum run time of 72 continuous hours at 100% prime load.

3) The fuel tank shall be double walled with a rupture basin of 110% capacity. It shall be pressure tested for leaks prior to shipment and have all necessary venting per US142 standards. A locking fill cap, a mechanical reading fuel level gage, low fuel level alarm contact, and fuel tank rupture alarm contact shall be provided. The fuel system shall require a polishing/filtration system for larger units to be determined by the Town. Any drain lines shall associated with the generator need to include brass plugs. Plastic plugs will not be accepted.

4) Fuel piping shall be designed for a working pressure of 250 psi. Sizing shall be in accordance with the manufacturer's recommendations, but not less than ½ inch in diameter.

5) A vapor withdrawal system shall be installed, to include a manual shut-off valve at the tank(s), a vaporizer, dry fuel filter, line service regulator, solenoid fuel shut-off valve to pen when engine runs, flexible pipe connection at the engine, and a gas flow regulator.

6) An 80% charge of propane in the propane storage tank shall be provided at the time of final acceptance.

7) Complete charges of antifreeze and oil shall be provided.

d) Lubrication.

1) Equipment shall be adequately lubricated by systems which require attention no more frequently than weekly during continuous operation. Lubrication systems shall not require attention during startup or shutdown and shall not waste lubricants.

2) Lubricants shall be provided in sufficient quantities to fill all lubricant reservoirs and to replace all consumption during testing, startup, and operation prior to acceptance of equipment. Unless otherwise specified or permitted, the use of synthetic lubricants will not be acceptable.

3) Lubrication facilities shall be convenient and accessible. Oil drains and fill openings shall be easily accessible from the normal operating area or platform. Drains shall allow for convenient collection of waste oil in containers from the normal operating area or platform without removing the unit from its normal installed position.

e) Alternator.

1) Alternator shall be revolving field, broad range, brushless type designed for minimum resistance, low voltage, waveform distortion, and maximum efficiency. Rotor shall be dynamically balanced permanently aligned to engine by flexible disc coupling. Maximum allowable voltage dip shall be 30%.

2) Exciter shall be 3 phase, full-wave rectified with silicon diodes mounted on a common motor shaft, sized for maximum motor starting.

3) Voltage regulator shall be solid state with silicon-controlled rectifiers with phase controlled sensing circuits.

4) Temperature rise at rated load shall be within limits for class F insulation in accordance with NEMA MG 1-22.40.

5) Insulation system shall be Class F in accordance with NEMA MG1-1.65. Rotor shall be vacuum impregnated with 100% solid epoxy resin for complete environmental protection. Stator shall be impregnated twice with varnish conforming to MIL-I-24092, Type M, Class 155.

6) Output circuit breaker shall be 3-pole, rated at 145% of alternator full load current.

f) Exhaust System.

1) Each engine-generator unit shall be furnished with a complete exhaust system including an exhaust silencer, exhaust piping, expansion joints, and accessories as required for a complete operating system.

2) A rain cap shall be provided to prevent rain from entering the exhaust pipe. The rain cap shall open from exhaust pressure from the engine and shall close when exhaust flow tops. The cap shall be stainless steel counter-balancing with vertical discharge.

g) Starting System.

1) Each engine-generator unit shall be furnished with a complete electric motor start system including starting motors, maintenance free starting batteries, battery pack with rack, cables, and battery charger.

2) The engine starter shall be a 12-volt DC or 24-volt DC, solenoid shaft, electric starting system with positive engagement.

3) The batteries shall be of the high rate, diesel starting, lead acid type. The batteries shall be sized for five 10 second cranks with battery and engine oil temperature of 30 degrees F and a battery end voltage of 70 percent of system voltage.

4) The battery charger shall be current limiting and shall be furnished to automatically recharge the batteries. The charger shall be dual charge rate with automatic switching to the boost rate when required. Output voltage regulation shall not exceed 1%. The charger shall include temperature compensation, NEMA 2 corrosion resistant enclosure, overload protection, silicon diode full wave rectifiers, voltage surge suppressor, DC ammeter, DC voltmeter, and fused AC input, on/off switch, remote annunciation of loss of AC power, low battery voltage, and high battery voltage, AC input and DC output circuit breakers or fuses, floating voltage equalization, equalizing timer. AC input voltage shall be 120 volts or 240 volts, single phase.

5) The battery charger shall have a DC output suitable to supply power for all continuous loads and to recharge the batteries from a full discharge state to normal operating voltage within 8 hours.

6) The batteries, battery rack, and battery charger shall be located within the engine-generator enclosure. The battery rack frame shall be constructed of corrosion resistant material.

7) The engine-generator shall automatically supply power to the battery charger when it is operating and utility power is not available.

h) Cooling System.

1) Each engine-generator unit shall be cooled with unit-mounted radiator cooling system complete with radiator, expansion tank, water pump, belt-driven fan, fan guard, thermostatic temperature control, high-water temperature cutout, and all accessories as required for proper operation. The radiator shall be sized to provide sufficient capacity for cooling of the engine and all other accessories required for proper operation at an ambient temperature of 125 degrees F and taking into account the enclosure static pressure restriction. The fan shall draw air over the engine and discharge through the radiator.

2) The cooling system shall be filled with a permanent antifreeze mixture of the ethylene glycol type with rust inhibitor.

3) The engine generator unit shall have a 240V coolant heater protected by a safeguard breaker inside the main control panel. A controller shall be included to regulate the output temperature to within safe limits. When the generator set is not running the heater is automatically connected to the AC supply trough a power relay mounted in the control panel. Upon receiving a start signal the AC supply is automatically disconnected by the power relay and automatically reconnected when the start signal is removed and the engine has stopped.

i) Enclosure.

1) The engine-generator unit, fuel system, control panel, battery rack, battery charger, power panel, exhaust silencer, and other ancillary equipment, shall be housed in a weatherproof enclosure.

2) The enclosure shall consist of a roof, side walls, and end walls, and shall be weatherproof and sufficiently sealed to prevent the entry of rodents.

3) The enclosure shall be constructed of 12 gage or heavier metal panels that can be easily removed, or doors.

4) Doors shall be lockable with stainless steel hardware for access to the engine-generator, controls, and accessories. Doors shall also provide easy accessibility for maintenance. Doors shall have lock arm to prevent swinging when open.

5) The enclosure shall be provided pre-wired, requiring only external connection to the power panel and ATS.

6) Lube oil and coolant drains shall be extended to the exterior of the enclosure and terminated with drain valves.

7) All moving parts inside of enclosure, including cooling fan and charging alternator, shall be fully guarded to prevent injury.

8) Lifting points shall be provided on base frame suitable for lifting combined weight of base tank, engine generator unit, and enclosure.
9) An LED floodlight shall be provided inside and outside the enclosure to illuminate the generator equipment located within the interior of the enclosure. The floodlight shall be provided with a switch mounted on the generator control panel.

j) Control System.

1) Provide a generator set mounted control panel for complete control and monitoring of the engine and generator set functions. Critical components shall be environmentally sealed to protect against failure from moisture and dirt. Components shall be housed in a NEMA 1/IP22 enclosure with hinged door secured with a twist lock latch. The panel door will have a voltage shunt switch. The panel itself shall be mounted on a separate support stand shall be mounted inside the enclosure such that the face of the panel faces outward and is isolated from vibrations of the engine/generator arrangement. Panel/breaker arrangements shall be mounted in such a manner as to not restrict access to the generator, engine, or other parts of the system that need periodic maintenance or repair.

2) The control panel shall be automatic and safety type and shall include at least all items required by NFPS 110 Level 1.

3) Panel shall include the following instrumentation and controls (at a minimum): AC voltmeter, AC ammeter, frequency/tachometer, engine running hours, coolant temperature gauge, lube oil pressure gauge, battery condition voltmeter, run/off/auto switch, emergency stop push-button, lamp test pushbutton, 7 position voltmeter phase selector switch, 4 position ammeter phase selector switch, 3 attempt start timer, cool down timer, remote start/stop terminals for 2-wire starting from ATS, charge rate ammeter, and exciter circuit breaker with manual reset.

4) Panel shall include the following emergency shutdowns with individual warning lamps (at a minimum): fail to start, high coolant temperature, low lube oil pressure, overspeed, overcrank protection, and alarm contact for auto-dialer (generator fail signal)

5) Panel shall include the following alarms with individual warning lamps (at a minimum): approaching low oil pressure, approaching high engine temperature, low/high battery voltage, battery charger failure, control switch not in auto mode.

6) Panel shall have at least 2 spare shutdown channels and 1 spare alarm channel and 4 additional fault channels for shutdown or alarm programming.

7) Panel shall have the ability to send up to 8 channels back to the existing SCADA system at the pump station.

8) Engine generator unit shall be provided with a fuel level gauge indicating relative fuel tank level in % values.

9) The panel shall be provided with a switched light that illuminates the panel face.

10) The panel shall include a stainless steel canopy with LED hood lights.

k) Circuit Breaker. Provide a generator mounted, molded case or insulated case construction, UL rated, 3 pole, and circuit breaker, sized as required. Breaker shall utilize a thermal magnetic trip. Breaker shall be housed in a steel NEMA 1 enclosure mounted on a separate support stand vibration isolated from the engine/generator arrangement. Bus bars, sized for the cable type shown on drawing, shall be supplied on the load side of breaker.

l) Receptacles. The engine generator will be supplied with two 120V, 20 amp duplex receptacles and two 120V, 20 amp twist lock receptacles. Receptacles will have individual circuit breakers, and will be placed inside the enclosure or will have weatherproof covers.

m) Shop Painting.

1) All steel and iron surfaces shall be protected by suitable coatings applied in the shop. Surfaces which will be inaccessible after assembly shall be protected for the life of the equipment. Coatings shall be suitable for the environment where the equipment is installed. Exposed surfaces shall be finished, thoroughly cleaned, and filled as necessary to provide a smooth, uniform base for painting. Electric motors, engine, alternator, enclosure, piping, and valves shall be shop primed and finish painted prior to shipment to the site.

2) Stainless steel, nonferrous, and nonmetallic surfaces shall not be painted.

n) Power Transformer. An externally mounted power transformer shall be supplied to provide required 240V single phase power to the coolant heater

and anti-condensation heater for each engine generator unit. The amp load shall be calculated by a licensed engineer or the generator manufacturer.

## F. Automatic Transfer Switch

1. An automatic transfer switch (ATS) shall be provided on all pump stations for switching power to the onsite backup generator when normal grid power fails. The ATS shall be provided by the same manufacturer as the generator, and included under the same warranty as the generator.

2. General

   a) The ATS shall be rated for the voltage and ampacity as shown on the plans and shall have 600 volt insulation on all parts in accordance with NEMA standards.

   b) The current rating shall be a continuous rating when the switch is installed in an unventilated enclosure, and shall conform to NEMA temperature rise standards. Designs which require cabinet ventilation are unacceptable and do not meet this Specification.

   c) The unit shall be rated based on all classes of loads, i.e., resistive, tungsten, ballast and inductive loads. Switches rated 400 amperes or less shall be UL listed for 100% tungsten lamp load.

   d) As a precondition for approval, all transfer switches complete with accessories shall be listed by Underwriters Laboratories, under Standard UL 1008 (automatic transfer switches) and approved for use on emergency systems.

   e) The withstand current capacity of the main contacts shall not be less than 20 times the continuous duty rating when coordinated with any molded case circuit breaker established by certified test data. Refer to required withstand and close ratings as detailed in this Specification.

   f) Temperature rise tests in accordance with UL 1008 shall have been conducted after the overload and endurance tests to confirm the ability of the units to carry their rated currents within the allowable temperature limits.

   g) Transfer switches shall comply with the applicable standards of UL, CSA, ANSI, NFPA, IEEE, NEMA, and IEC.

   h) The transfer switches shall be supplied with a microprocessor based control panel as detailed further in these Specifications.

   i) The transfer switch shall be capable of detecting if the source switch was successful and if the pump station is receiving power. It shall also be capable

of transmitting a failure signal if it was not successful in switching sources and the pump station is not receiving power.

3. Sequence of Operation

a) The ATS shall incorporate adjustable three phase under-voltage sensing of the normal source and emergency source.

b) When the voltage of any phase of the normal source is reduced to 80% of nominal voltage, for a period of 0-10 seconds (programmable) a pilot contact shall close to initiate starting of the engine generator.

c) When the emergency source has reached a voltage value within 10% of nominal voltage and achieved frequency within 5% of the rated value, the load shall be transferred to the emergency source after a programmable time delay.

d) When the normal source has been restored to not less than 90% of rated voltage on all phases, the load shall be re-transferred to the normal source after a time delay of 0-30 minutes (programmable). The generator shall run unloaded for 5 minutes (programmable) and then automatically shut down. The generator shall be ready for automatic operation upon the next failure of the normal source.

e) If the engine generator should fail while carrying the load, retransfer to the normal source shall be made instantaneously upon restoration of proper voltage (90%) on the normal source.

f) The transfer switch shall be equipped with a microprocessor based control panel. The control panel shall perform the operational and display functions of the transfer switch. The display functions of the control panel shall include ATS position and source availability.

g) The front panel display shall include indicators for timing functions, capability to bypass the TD on transfer or retransfer, and an ATS test switch and afford on-board diagnostic capability.

h) The control panel shall be provided with calibrated pots (accessible only by first opening the lockable cabinet door) to set time delays, voltage and frequency sensors. Designs which make use of DIP switches to render such adjustments are not acceptable. The ATS shall be capable of being adjusted while the controls are energized and the unit in automatic mode. Designs which force a "programming mode" or require the controls be de-energized during adjustment are unacceptable.

i) The control panel shall be opto-isolated from its inputs to reduce susceptibility to electrical noise and provided with the following inherent control functions and capabilities:

1) An LED display for continuous monitoring of the ATS functions.

2) Built-in diagnostic display.

3) Capability to support external communication and network interface through an optional RS 485 port.

4) Mechanical test switch to simulate a normal source failure.

5) Time delay to override momentary normal source failure prior to engine start. Field programmable 0-10 minutes (continuously adjustable via a calibrated potentiometer factory set at 3 minutes).

6) Time delay on retransfer to normal source, continuously adjustable 0-30 minutes, factory set at 15 minutes. If the emergency source fails during the retransfer time delay, the transfer switch controls shall automatically bypass the time delay and immediately retransfer to the normal position.

7) Time delay on transfer to emergency, continuously adjustable 0-15 minute, factory set at 1 minute.

8) An in-phase monitor shall be provided. The monitor shall compare the phase angle difference between the normal and emergency sources and be programmed to anticipate the zero crossing point to minimize switching transients.

9) An interval-type automatic clock exerciser shall be incorporated within the microprocessor.

10) Provide a momentary pushbutton to bypass the time delays on transfer and retransfer.

4. Construction and Performance

a) The automatic transfer switch shall be of double throw construction operated by a reliable electrical mechanism momentarily energized. There shall be a direct mechanical coupling to facilitate transfer in 6 cycles or less.

b) The normal and emergency contacts shall be mechanically interlocked such that failure of any coil or disarrangement of any part shall not permit a neutral position.

c) For switches installed in systems having ground fault protective devices, and/or wired so as to be designated a separately derived system by the NEC, a 4th pole shall be provided. This additional pole shall isolate the normal and emergency neutrals. The neutral pole shall have the same withstand and operational ratings as the other poles and shall be arranged to break last and make first to minimize neutral switching transients. Add-on or accessory poles that are not of identical construction and withstand capability are not acceptable.

d) The contact structure shall consist of a main current carrying contact, which is a silver alloy with a minimum of 50% silver content. The current carrying contacts shall be protected by silver tungsten arcing contacts on all sizes above 400 Amps.

e) The transfer switch manufacturer shall submit test data for each size switch, showing it can withstand fault currents of the magnitude and the duration necessary to maintain the system integrity. Minimum UL listed withstand and close into fault ratings shall be as follows:

Any molded case breaker:

| Size (Amps) | (RMS Symmetrical) |
|---|---|
| Up to 200 | 10,000 |
| 201-260 | 35,000 |
| 261-400 | 35,000 |
| 401-1200 | 50,000 |
| 1201-4000 | 100,000 |

Specific coordinated breakers:

| Size (Amps) | (RMS Symmetrical) |
|---|---|
| Up to 150 | 30,000 |
| 151-260 | 42,000 |
| 261-400 | 50,000 |
| 401-800 | 65,000 |
| 801-1200 | 85,000 |
| 1201-4000 | 100,000 |

Current limiting fuse:

| Size (Amps) | (RMS Symmetrical) |
|---|---|
| Up to 4000 | 200,000 |

*All values 480 volt, RMS symmetrical, less than 20% power factor.

f) A dielectric test at the conclusion of the closing tests shall be performed.

g) The automatic transfer switch manufacturer shall certify sufficient arc interrupting capabilities for 50 cycles of operation between a normal and

emergency source that are 120 degrees out of phase at 480 volts, 600% of rated current at 0.50 power factor. This certification is to ensure that there will be no current flow between the two isolated sources during switching.

h) All relays shall be continuous duty industrial type with wiping contacts. Customer interface contacts shall be rated 10 amperes minimum. Coils, fuses, relays, timers and accessories shall be readily front accessible. The control panel and power section shall be interconnected with a harness and keyed disconnect plugs for maintenance.

i) Main and arcing contacts shall be visible without major disassembly to facilitate inspection and maintenance.

j) A manual handle shall be provided for maintenance purposes with the switch de-energized. An operator disconnect switch shall be provided to defeat automatic operation during maintenance, inspection, or manual operation.

k) The switch shall be mounted in a NEMA 3R enclosure unless otherwise indicated on the plans.

l) Switches composed of molded case breakers, contactors or components thereof not specifically designed as an automatic transfer switch will not be acceptable.

## 804 Odor/Chemical Facilities

1. Odor control measures shall be evaluated for all possible sources of odor related to wastewater pumping systems. Source locations to be analyzed shall include, but not be limited to, the wetwell at the pump station, the force main discharge location, and force main air release valves. Odor control measures to be analyzed shall include, but not be limited to, oxidizing agent added to the wastewater, odor masking agents added to the air, activated carbon treatment, biofilter treatment, and wet scrubber treatment. Final determination of appropriate odor control measures shall be made by the Director of Water Resources.

2. Solutions that include chemical feed must consider the feasibility of chemical delivery to the site, provide appropriate chemical storage facilities including secondary containment, and must incorporate chemical feed systems as listed in the Town of Apex Approved Manufacturers List.

3. Odor control facilities not located on the pump station site (air release valves and discharge points, for instance) shall be constructed in underground vaults or if necessary to be above ground, shall be house inside a structure. Appropriate consideration shall be given to changing media or supplying chemical at the remote locations, as well as the safety of the maintenance staff while servicing the systems.

## 805 Inspections, Testing, and Training

### A. Inspections

1. All materials and equipment used in the construction of the wastewater pumping system must be verified for compliance with the Specifications (or other approval granted by the Town) by the Infrastructure Field Technician prior to installation. Non-conforming materials or equipment shall be immediately removed from the job site.

2. Compliance with plans and Specifications shall be verified on a regular basis by the Infrastructure Field Technician.

### B. Testing

1. General

   a) The Contractor shall furnish all materials, labor, and equipment to perform all testing and start up services. Water for testing purposes may be obtained from the Town of Apex. The Contractor shall reimburse the Town for all water used at Inside Utility Rates.

   b) All water or wastewater used during testing of the pump station, force main, or any of the systems described in this section, must be returned to the Town of Apex sanitary sewer system after proper coordination with the Town of Apex Department of Public Works and Utilities.

   c) Before the operational tests are conducted, the required copies of the Operation and Maintenance Manuals shall be delivered to the Town.

   d) The Town reserves the right to require further testing, as necessary, to assure that all components and infrastructure are performing in accordance with the manufacturer recommendations and Town Specifications. All testing, repairs and/or readjustments, and necessary re-testing, shall be at no additional cost to the Town.

   e) All on-site testing and/or installation verification shall be performed in the presence of the Infrastructure Field Technician or other representative authorized by the Town.

   f) All testing, installation verification, and training, shall be performed in the presence of, or by, an experienced, competent, and authorized manufacturer's representative.

g) Factory testing shall consist of testing all operating functions of the equipment under varying operating conditions to assure that it will perform as specified. Any specific testing that may be required is discussed under the individual equipment items below. Results of factory testing shall be presented to the Town prior to delivery of the equipment.

h) Installation Verification shall consist of a visit to the site by a manufacturer's representative to inspect, check, adjust if necessary, and approve the equipment installation. The manufacturer's representative shall certify that the equipment has been properly installed and lubricated, is in accurate alignment, and is free from any undue stress imposed by connecting piping or anchor bolts. Any specific verification requirements are discussed under the individual equipment items below. Results of the installation verification shall be presented to the Town prior to start-up of the equipment.

i) On-Site Testing shall consist of all manual and automatic operating functions under various operating conditions, including full load conditions. The equipment shall also be tested under adverse or emergency conditions. All alarms and remote signals shall also be tested. Any specific testing that may be required is discussed under the individual equipment items below. Results of the on-site testing shall be presented to the Town prior to final acceptance of the project.

j) All functions and systems of the pump station, even those not specifically listed below, shall be tested to ensure proper operation under normal and emergency situations.

k) All defective equipment or malfunctioning systems shall be replaced or corrected, and the full system placed in a fully operational condition to the satisfaction of the Infrastructure Field Technician.

l) Results of all factory testing, installation certifications, and on-site operational testing shall be provided to the Town of Apex in the final construction documents as described in the Submittals portion of this Specification section.

2. Pump Testing

a) Each pump shall be tested at the factory for capacity, power requirements, and efficiency at specified rated head, shutoff head, operating head extremes, and at as many other points as necessary for accurate performance curve plotting. All tests and test reports shall conform to the requirements and recommendations of the Hydraulic Institute Standards. Acceptance testing shall be Level A, with no minus tolerance or margin allowed. The test result report shall include data and test information as stipulated in the Hydraulic Institute Standards, copies of the test log originals, test reading to curve conversion equations, and certified performance curves. The curves shall

include head, bhp (brake kW), pump efficiency, and shop test NPSH available, plotted against capacity. The curves shall be easily read and plotted to scales consistent with performance requirements. All test points shall be clearly shown.

b) All pumps shall receive installation verification.

c) On-site testing shall be performed to the maximum extent possible (flow availability could limit the range of testing conditions).

3. Grinder Testing

a) Each grinder unit shall be factory tested.

b) Each grinder unit shall receive installation verification.
c) Each grinder unit shall receive on-site testing.

4. Generator Testing

a) Each engine generator set shall be fully assembled with its control panel and factory tested to demonstrate that the equipment conforms to specified requirements for load capacity. The tests shall consist of repeated starts and stops operation under a load bank at specified capacity for a minimum of 4 continuous hours, and tests to demonstrate that each safety shutdown device is working properly.

b) Each engine generator set shall receive installation verification.

c) Each engine-generator set shall receive on-site testing to demonstrate that the equipment conforms to specified requirements for load capacity, and starting duty. The complete system (engine, generator, control panel, and automatic transfer switch) shall be field tested together by the manufacturer or manufacturer's representative as a complete system to assure compatibility. A resistive load bank with temporary connections shall be provided to complete the field testing. Each unit shall be mechanically checked for proper operation. Each alarm and safety shutdown shall be checked by artificially simulating an alarm condition. The testing shall consist of repeated starts and stops, a "cold start", normal operation under full load conditions at the specified power rating for a minimum of four continuous hours, and a one step rated load pickup test in accordance with NFPA 110. The following items shall be measured, recorded, and submitted in a field test report: outdoor ambient temperature, barometric pressure, kW output, engine speed (RPM), engine jacket water temperature, engine oil pressure, start time, completion time. Test reports shall verify that the specified tests have been performed and shall state results.

5. Automatic Transfer Switch Testing

   a) Each automatic transfer switch shall receive field verification.

   b) Each automatic transfer switch shall receive on-site testing in conjunction with the engine generator. At a minimum, the main power supply from the commercial power grid shall be cut and the switch shall automatically properly transfer the power feed to the standby generator.

6. Control System Testing

   a) All electrical, instrumentation, control, and telemetry systems shall receive on-site testing to ensure complete operation of all systems. At a minimum the testing shall include the following:

      1) Pump automatic control and operation
      2) Level-sensing equipment operation
      3) Alarm and telemetry system automatic operation
      4) Backup power generation automatic control and operation
      5) Vibration testing of all rotating equipment

7. Structure Testing

   a) Wetwells and other wastewater containing structures at the pump station shall be inspected and tested for watertightness. Structures shall be thoroughly cleared of dirt, mud, gravel and other foreign debris prior to testing.

   b) The watertightness test shall be performed in accordance with ACI 350.1R "Testing Reinforced Concrete Structures for Watertightness". If the structure is a small diameter precast manhole, a vacuum test in accordance with ASTM C1244 "Standard Test Method for Concrete Sewer Manholes by Negative Test Pressure (Vacuum) Test" may be used in lieu of the hydrostatic test.

   c) Watertightness testing shall not commence until the structure is fully assembled and backfilled.

   d) Any structure that fails to meet the requirements of the watertightness test shall be inspected, made watertight, and retested until the structure passes.

## C. Operator Training

1. Suppliers of major equipment packages shall provide training to Town of Apex staff as to the proper operation and maintenance of their equipment.

2. Training shall be performed by an experienced, competent, and authorized manufacturer's representative.

3. Training shall be at no additional cost to the Town.

4. Training shall be provided for, but not limited to, the equipment listed in the table below. The training times presented below for Operation Training and Maintenance Training are the minimum required. Complicated systems can require more than the minimum requirements.

| Equipment System | Operation Training (hours) | Maintenance Training (hours) |
|---|---|---|
| Pumps and Pump Control Systems | 2 | 4 |
| Grinder System | 1 | 2 |
| Engine Generator and Automatic Transfer Switch | 2 | 4 |
| Chemical on/or Odor Control Systems | 1 | 2 |
| Alarm Dialer/ SCADA/Telemetry | 1 | 0 |

5. Operational training shall include, but not be limited to, the following procedures or information: normal startup of the unit, normal shutdown of the unit, emergency shutdown of the unit, normal operation of the unit (typical temperature, pressures, signals, rpm, etc., for gages and instruments which are displayed on the panel), a presentation of all operational features (alternative run modes, bypasses, other features not typically used in day-to-day operation, etc.), presentation of all alarm signals, etc.

6. Maintenance training shall include, but not be limited to, the following procedures or information: standard lubrication procedures and schedules, removal and replacement of equipment, disassembly and re-assembly, replacement of wear parts or common replacement parts, standard troubleshooting procedures, etc.

7. Simplified operation instructions shall be submitted for review in accordance with the submittals section of this Specification. When the review is complete, the instruction sheets shall be printed on heavy paper or cardboard stock and laminated with clear plastic. Two copies of the laminated instructions shall be furnished with the unit. One copy shall be located or displayed at the control panel for the unit. The reserve copy shall be delivered to the Town. The instructions specified here are in addition to the required operation and maintenance manuals.

## 806 Force Main General

1. These Specifications apply to all force mains that are to be owned, operated, and maintained by the Town of Apex. Design of private pump stations and force mains and associated facilities is not covered by these Specifications or otherwise herein,

and the applicant should look for guidance from other appropriate agencies (NCDEQ, NC Plumbing Code, etc.).

2. All aspects of the design of wastewater force mains, and associated facilities shall, at a minimum, meet the requirements of the latest version of the NCDEQ "Minimum Design Criteria for the Fast-Track Permitting of Pump Stations and Force Mains". Requirements presented in the Town of Apex Standard Specifications hereunder that are more restrictive or go above and beyond the requirements of the Minimum Design Criteria are required by the Town of Apex.

3. All aspects of the design of pump stations, force mains, and associated facilities shall be submitted for review and approval to the Town of Apex Water Resources Department.

4. Wastewater force main interconnections shall be prohibited. All wastewater force mains shall extend to the nearest gravity sewer or pump station wet well that has sufficient long term capacity.

## 807 Wastewater Force Mains

### A. Design

1. Force mains shall be installed with a minimum cover of 3 feet measured from the top of the pipe to the finished grade (or subgrade if installed under roadways). The engineering drawings shall include profile drawings for the entire length of the main.

2. All force mains shall be located within dedicated right of way of Town roads, outside of the right of way on NCDOT roads, or dedicated easements with a minimum width of 20 feet. When wastewater force mains are constructed adjacent to gravity sewer mains or for construction of parallel wastewater force mains, the minimum horizontal clearance shall be at minimum 7-ft from pipe edge to pipe edge when the depth of installation is 8-ft or less. Otherwise, the minimum horizontal separation between pipelines shall be 10-ft up to installation depth of 10-ft. Clearances for pipelines greater than 10-ft depth shall be designed by Engineer of Record and approved by the Town of Apex Water Resources Department. Easement widths outlined below shall be widened by at least the clearance between the pipelines when constructing a shared gravity sewer and wastewater force main corridor.

3. All force mains shall be installed outside of all Zone 1 and Zone 2 buffers whenever practical. Sewer main shall be installed outside of all floodplain unless No Practical Alternative is available and prior approval is obtained from the Water Resources Director.

Standard Easement Width for Sewer Force Mains

| Pipe Depth* | Permanent Easement Width | Town Road R/W |
|---|---|---|
| 8-ft or less | 20-ft | Allowed |
| 8-ft – 15-ft | 30ft | As Specified by the WR Department |
| 15-ft – 20-ft | 40-ft | Not Allowed |
| Deeper than 20 ft | As Specified by the WR Department | Not Allowed |

*Depth of the sewer main shall be measured from the top of the pipe to the final grade or road subgrade at the deepest point between manholes.

4. Dedicated easements for force mains and appurtenances shall be recorded as "Town of Apex Public Forcemain Easement". Town of Apex force main easements shall contain only Town of Apex utilities unless otherwise approved by an encroachment agreement.

5. Wastewater force main discharge manholes and intermediate air release locations that require odor control shall be provided with sufficient easement area to accommodate the odor control systems as designed by the Engineer of Record, whether utilizing passive, forced-air or chemical treatment for odor control. The maintenance easement for odor control systems shall be sized based on site specific conditions and shall provide sufficient area for routine maintenance operations, such as refilling media, chemicals, replacing equipment, etc.

6. Force mains shall discharge at the invert of the receiving manhole and shall be as close as possible to 180 degrees from the outlet pipe.

7. Force main design shall facilitate cleaning and inspection. The use of 90 degree bends is prohibited.

8. Force mains shall be constructed with a pigging/bypass connection located within 50-ft of the pump station valve vault.

9. Force main minimum design velocity shall not be less than 2-ft per second throughout the length of the force main. As a design preference, force main systems when operating at higher flows shall reach velocities of 3 to 5 ft/s to re-suspend any settled solids.

   Force main systems shall be of adequate sizing and design to effectively convey the ultimate peak flows as applied by the connected pump station to the discharge point.

10. The force main route shall be such that the number of high points requiring combination air valves is minimized to the extent possible. Combination Air Valves

rated for use with raw wastewater shall be installed at all the high points or runs exceeding 3000-ft on all force mains in accordance with the Standard Details. A high point shall be determined as any location where the vertical separation between the adjacent low point and high point in the force main is greater than or equal to 10 vertical feet.

11. Restraint:
    a) General: All pipe, valves, and fittings shall be restrained. Pipe joints shall also be restrained an adequate length away from valves and fittings in accordance with AWWA manual M41 (or the latest edition of *Thrust Restraint Design for Ductile Iron Pipe* as published by the Ductile Iron Pipe Research Association). In all cases, there must be a pipe restraint plan with the method of restraint to be used and the length of pipe to be restrained clearly identified on the plans at all necessary locations. The pipe restraint plan shall be included under the design responsibility of the NC Professional Engineer sealing the plan drawings. All restraint systems shall be factory produced by the manufacturer.

    b) Pipe Joints: The standard joint restraint method shall be to use manufacturer provided restrained joint pipe. Pipe up to and including 12-inches in diameter may utilize mechanical joint pipe with approved wedge action retainer glands (for the specified distance). All joint restraint products that include the means of restraint within the joint gasket shall be prohibited. Fusible C-900 DR 18 PVC may be utilized as an acceptable means of restraint.

    c) Valves: Valves shall be restrained in a manner consistent with operation as a dead end. This includes restraining the valve to the pipe and restraining a sufficient number of pipe joints on both sides of the valve to accommodate dead end restraint.

12. A plug valve shall be installed at least every 3000 feet of force main length.

13. All air release valves, plug valves greater than 12-inches, or other appurtenances that have moving or operating parts and require maintenance and routine access shall have a manhole placed over them or over the operating portion of the device.

14. Separation Requirements:

    a) Separation between Sewer Force Main and Storm Water Pipes:
    Sewer force mains shall have a minimum vertical separation of 24 inches between storm pipes when the horizontal separation is 3 feet or less. Where sanitary and storm sewers cross with a vertical separation of less than 24 inches, the entire leg of sanitary sewer shall be made of standard ductile iron pipe with joints rated for water main service and the void space between the pipe crossing shall be backfilled with 3000-psi concrete or

minimum 500-psi, quick setting, non-excavatable flowable fill that meets or exceeds NCDOT Specifications.

b) Separation between Sanitary Sewer and Sewer Force Main:
There shall be a minimum 7 foot horizontal separation between parallel gravity and/or force mains in outfall locations when the depth of installation is 8-ft or less. Otherwise, the minimum horizontal separation between pipelines shall be 10-ft in outfalls.

c) Separation between Sewer Force Main and Water Main:
Parallel Installations: 10-ft lateral separation (pipe edge to pipe edge) or minimum 5-ft lateral separation, and water line at least 18-inches above sewer force main measured vertically from top of sewer pipeline to bottom edge of water main.

d) Crossings (Water Main over Sewer Force Main): All water main crossings of sewer force mains shall be constructed in conformance with Town of Apex Specifications. At a minimum, 18-inches of clearance shall be maintained between the bottom edge of the water main and the top edge of the sewer force main. If 18-inches of clearance is not maintained, the water main and sewer force main shall both be constructed of ductile iron pipe with joints in conformance with water main construction standards. The ductile iron sewer force main shall extend 10-ft on both sides of the crossing. When the separation between pipelines is 18-inches or less, the void space between the pipes shall be filled with minimum 5000-psi, quick setting, and non-excavatable flowable fill extending 3-ft on both sides of the crossing. Regardless of pipe material, at least 12-inches of vertical separation is required for sewer force main crossings of potable water mains.

e) Crossings (Water Main under Sewer Force Main: Allowed only as approved by Town of Apex, when it is not possible to cross the water main above the sewer force main. At a minimum, 18-inches of separation shall be maintained, (measured from pipe edge to pipe edge) and both the water main and sewer force main shall be constructed of ductile iron in conformance with water main construction standards to a minimum of 10-ft on both sides of the crossing. If local conditions prevent providing 18-inches of clearance, then at least 12-inches of clearance shall be provided and the void space between the pipes shall be filled with minimum 5000-psi, quick setting, and non-excavatable flowable fill extending at least 3-ft on both sides of the crossing. In all cases the water main pipe shall be centered at the point of crossing with joints equally spaced from the point of crossing.

f) Sanitary Sewer Force Main and Stream Crossings:
The top of the sewer force main shall be at least three feet below the stream bed. If three feet of cover cannot be achieved, prior approval from the Water Resources Director must be obtained and concrete encasement and ductile iron pipe shall be required

Sewer force mains shall not be installed under any part of water impoundments or area to be impounded. Sewer mains shall not be installed through, above, or below any retained earth structure. Sewer main location and depth shall not be within the theoretical 1:1 slope of any impoundment dam or structure, or shall maintain a minimum of 10' horizontal separation from the toe of slope, whichever is greater. The entire easement shall be outside of the toe of slope, unless prior approval is obtained from the Water Resources Director.

The following minimum horizontal separations shall be maintained:

1) 100 feet from any private or public water supply source, including wells, WS-1 waters or Class I or Class II impounded reservoirs used as a source of drinking water (except as noted below).

2) 50 feet from any waters (from normal high water) classified WS-II, WS-III, B, SA, ORW, HQW or SB (except as noted below).

3) 10 feet from any other stream, lake, or impoundment (except as noted below).

4) 50 feet from private wells (with no exceptions).

5) 50 feet from sources of public water supply (with no exceptions)

Where the required minimum separations cannot be obtained, ductile iron sewer force main pipe with joints equivalent to water main standards shall be used. Steel casing and/or concrete may also be required for protection, at the direction of the Water Resources Director.

## B. Materials

1. Pipe Materials

a) The minimum wastewater force main size shall be 4-inches in diameter.

b) Ductile Iron Pipe or PVC C900 DR18 shall be required for all wastewater force mains.

c) Ductile iron pipe shall be designed and manufactured in accordance with AWWA C150 and C151 and provided in nominal 20-ft lengths. The minimum requirements for ductile iron pipe and required laying conditions are tabulated below. For all other installations other than specified, the laying condition, bedding requirements or the minimum pressure class rating and/or thickness class shall be increased in accordance with AWWA C151. A pipe thickness

design shall be submitted for external loading in all cases where the pipe depth exceeds the specified range of depths outlined in the following table.

Pressure Class, Max. Depth and Laying Condition for DI Wastewater Force Mains

| Pipe Diameter | AWWA C-150, Laying Condition | Pressure Class | Maximum Depth of Cover |
|---|---|---|---|
| 4-8 -inch | type 1 | 350 psi | 3-16 feet |
| 4-8 -inch | type 4 | 350 psi | 16-20 feet |
| 10-12 -inch | type 1 | 350 psi | 3-10 feet |
| 10-12 -inch | type 4 | 350 psi | 10-20 feet |
| 14-20 -inch | type 4 | 350 psi | 3-25 feet |
| 24 -inch | type 4 | 350 psi | 3-25 feet |

Note: For cases not specified, a ductile iron pipe and bedding design certified by a Professional Engineer licensed in the State of North Carolina shall be required in compliance with AWWA C150 and the Ductile Iron Pipe Research Association.

All ductile iron pipe shall be marked in conformance with ASTM A-746.

The following table lists approved manufacturers of DIP, DIP fittings, and RJDIP that are allowable for installation within the Town's system.

| Product Category | Approved Manufacturer | Model/Series | Pressure/Load Rating | Reference Standard | Requirements |
|---|---|---|---|---|---|
| Ductile Iron Pipe 4-inch & Larger Diameter Protecto 401 Lined | US Pipe | Tyton Joint | 250-350 psi | AWWA C150 and C151 and DIPRA Standards | 40-mils of Protecto 401 Lining (lining must be less than 1 year old); McWane pipe stamped "McWane by Atlantic States or Clow" only |
| | American (ACIPCO) | Fastite Joint | | | |
| | McWane | Tyton Joint | | | |
| Ductile Iron Fittings 4-inch & Larger Diameter Protecto 401 Lined | Sigma | Mech. Joint | 250-350 psi | AWWA C110/C111 and AWWA C153 | Shall always meet or exceed pipe pressure rating |
| | Tyler Union | Mech. Joint | | | |
| | SIP Industries | Mech. Joint | | | |
| | Star | Mech. Joint | | | |
| | American | Mech. Joint | | | |
| Ductile Iron Restrained Joint Pipe 4-inch & Larger Diameter Protecto 401 Lined | US Pipe | TR Flex | 250-350 psi | AWWA C150 and C151 | Boltless restraint unless otherwise specified |
| | American (ACIPCO) | Flex Ring | | | |
| | McWane | TR Flex (pipes 24" and smaller) | | | |

d) All ductile iron wastewater force mains and fittings for sewer construction shall receive an interior ceramic epoxy coating, consisting of an amine cured novalac epoxy containing at least 20% by volume of ceramic quartz pigment, as manufactured by Protecto 401. The interior coating shall be applied at a nominal dry film interior thickness of 40-mils. All DIP bells and spigots shall be lined with 8-mils of Protecto 401 joint compound applied by brush to ensure full coverage. All pipe supplied with Protecto 401 interior lining shall be provided free of holidays. Pipe installed with defects in the lining will be rejected. Patching of Protecto 401 coating defects after installation shall not be approved. Protecto 401 lined pipe must be installed within one year of the application date on the pipe.

The liner manufacturer shall have a minimum of ten (10) years of successful experience and be able to demonstrate successful performance on comparable projects.

Permeability rating of 0.00 when tested according to Method A of ASTM E-96-66, Procedure A with a test duration of 30 days.

e) PVC pipe shall conform to AWWA C900 standards along with the following requirements:
    1) Outside diameter shall conform to that of ductile iron pipe.
    2) Pipe shall have plain end and elastomeric gasket bell ends.
    3) Green in color.

f) Pipe fittings shall be made of ductile iron designed and manufactured per AWWA C110 or C153. All fittings up to and including 24 inches in diameter shall be designed for a minimum internal pressure of 350 psi, unless otherwise approved by the Town of Apex. Fittings shall be mechanical joint or proprietary manufacturer provided restrained joint. Gaskets shall be in accordance with AWWA C111. All fittings shall be interior coated with Protecto 401 as specified herein for ductile iron pipe. Two 45 degree fittings shall be used in lieu of 90 degree fittings in all horizontal and vertical installations.

g) Restrained Joint Pipe shall be the boltless type unless otherwise approved. For installations requiring welded locking rings, the rings shall be factory welded. The restrained joints shall provide a minimum of 4-degrees of deflection for pipe sizes, 4-inches through 12-inches in diameter.

   All proprietary pipe restraint systems shall be approved by the Town of Apex and provided in compliance with all standards for coatings, linings, pressure classes, etc. as required for PVC C900 or ductile iron pipe. All restrained joint pipe shall be installed based on laying conditions, pressure class, etc. as required for typical ductile iron pipe.

   Pipe and fitting manufacturer(s) must have a supplier within 200 miles of the Town of Apex.

2. Manhole Materials:
   a) All sewer force main manholes shall be installed according to Section 0700 of the Town of Apex Standard Specifications when design and installation criteria are not otherwise covered herein.

   b) All force main discharge locations (including all downstream manholes within 1,200 feet) and other manholes for wastewater force mains (excluding those housing large diameter plug valves) shall be epoxy coated at minimum 80-mils thickness.

   c) Force Main Manhole Epoxy Coating: Sewer force main receiver manholes, sewer force main combination air valve manholes and other concrete structures subject to high levels of hydrogen sulfide gas shall be provided with an approved monolithic epoxy coating system consisting of a 100% solids,

solvent-free, two-component epoxy resin that meets the following Specifications for up to 100 mils of coating with a manufacturer approved set time of 6-hours or less.

1) Surface Preparation: Concrete manholes must be well cured prior to application of the protective epoxy coating. Generally, 28 days is adequate cure time for standard Portland cement. If earlier application is desired, compressive or tensile strength of the concrete can be tested to determine if acceptable cure has occurred. (Note: Bond strength of the coating to the concrete surface is generally limited to the tensile strength of the concrete itself. An Elcometer pull test to determine suitability of concrete for coating may be required).

   Surface preparation shall be based on the requirements of the manufacturer of the epoxy coating and applicable NACE International standards.

2) Installation: A minimum 80-mils thickness shall be applied to new manholes (120-mils for existing manholes). During application a wet film thickness gage, meeting ASTM D4414 - Standard Practice for Measurement of Wet Film Thickness of Organic Coatings by Notched Gages, shall be used to ensure a monolithic coating and uniform thickness during application.

   Temperature of the surface to be coated should be maintained between 40° F and 120° F during application. Prior to and during application, care should be taken to avoid exposure of direct sunlight or other intense heat source to the structure being coated. Where varying surface temperatures do exist, care should be taken to apply the coating when the temperature is falling versus rising or in the early morning. The humidity should also be observed to ensure compliance with the epoxy manufacturers' recommendations.

   Manufacturer approved heated plural component spray equipment shall be used in the application of the specified protective epoxy coating. The spray equipment shall be specifically designed to accurately ratio and apply the specified protective coating materials and shall be regularly maintained and in proper working order.

   If necessary, subsequent topcoating or additional coats of the protective coating should occur as soon as the basecoat becomes tack free, ideally within 12 hours but no later than the recoat window for the specified products. Additional surface preparation procedures will be required if this recoat window is exceeded.

d) Force Main Receiver Manholes: Sewer force mains shall not discharge directly into existing gravity sewer lines. Sewer force mains shall typically discharge into a receiver manhole that has been epoxy coated as specified herein. The receiver manhole shall be provided in the typical eccentric tapered design at minimum 5-ft diameter. The bench shall be sloped up to 8-inches from the invert channel to the manhole wall. The invert shall be provided with a gradual upsloping alignment from the force main entry to the gravity transition point. Sufficient grade shall be placed on the invert such that wastewater falls back into the force main when the pumps are not in operation creating a vapor lock between the force main and the manhole. Drop connections into force main receiver manholes shall be prohibited.

The interior surface of the receiving manhole at the discharge end of the force main and all manholes within 1,200 feet downstream of a force main connection shall receive 2 coats of Sherwin Williams Sher-Flex or equivalent. Coatings shall conform to US Army Corps of Engineers Specification C-200. The coating shall have a total dry film thickness of 80-125 mils, and all blemishes shall be touched up prior to acceptance.

Force mains shall discharge at the invert of the receiving manhole and at an angle which is as close as possible to 180-degrees of the outlet pipe.

e) Combination Air Valve Manholes: Manholes for combination air valve installation shall be provided in flat top configuration to accommodate the excess length of wastewater combination air valves. In cases where the combination air valve assembly shall be located in a paved area, provide typical eccentric, tapered manhole design with typical manhole frame and cover for paved areas. The minimum manhole diameter for combination air valve assemblies shall be 5-ft. Minimum 6-ft diameter manholes shall be used with force mains 20-inches and larger and when an odor control system is required. Any manholes located in NCDOT or street right-of-way shall be provided flush with finished grade. ARVs shall be 2-inch and manufactured by ARI, model D-02P sewage dual ARV with plastic body.

## C. Installation

1. General

Ductile iron pipe shall be installed in accordance with the requirements of AWWA C600 and the Ductile Iron Pipe Handbook published by the Ductile Iron Pipe Research Association. Materials at all times shall be handled with mechanical equipment or in such a manner to protect them from damage. At no time shall pipe and fittings be dropped or pushed into ditches.

Pipe trench excavation and backfilling shall be performed in accordance with Section 0450 of these Specifications.

Pipe and fitting interiors shall be protected from foreign matter and shall be inspected for damage and defects prior to installation. In the event foreign matter is present in pipe and fittings, it shall be removed before installation. Open ends of pipe shall be plugged or capped when pipe laying is not in progress.

All pipe shall be constructed with at least 48 inches of cover below the finished surface grade. Pipe shall be laid on true lines as directed by the Engineer. The wastewater force main shall be installed at a grade which will allow air to migrate to a high point where the air can be released through an air valve. A minimum pipe slope of 1 foot in 500 feet should be maintained and there shall be no intermediate high points in the line.

Trenches shall be sufficiently wide to adjust the alignment. Bell holes shall be dug at each joint to permit proper joint assembly. The pipe shall be laid and adjusted so that the alignment with the next succeeding joint will be centered in the joint and the entire pipeline will be in continuous alignment both horizontally and vertically. Pipe joints shall be fitted so that a thoroughly watertight joint will result. All joints will be made in conformance with the manufacturer's recommendations for the type of joint selected. All transition joints between different types of pipe shall be made with transition couplings approved on shop drawings showing the complete assembly to scale.

Forcemains shall not be installed within roundabouts or alleys.

2. Utility Coordination

Prior to beginning construction, the Contractor shall contact local utility companies and verify the location of existing utilities. The Contractor shall be completely and solely responsible for locating all existing buried utilities inside the construction zone before beginning excavation. The Contractor shall be solely responsible for scheduling and coordinating the utility location work. When an existing utility is in conflict with construction, it shall be exposed prior to beginning construction to prevent damage to the existing utility.

## D. Valves and Appurtenances

1. General: The rated working pressure of all valves and appurtenances shall meet the maximum design pressure of the pump station and pipeline.

2. Check Valve: Check valves shall be iron bodied, fully bronze mounted with bronze clapper disc and bronze seat ring, and shall have a spring loaded lever arm capable of being mounted on either side of the valve.

3. Plug Valve: Plug valves shall be non-lubricating, eccentric action and resilient plug facing with heavy duty Type 316 stainless steel bearings. Plug valves shall be

designed for a minimum working pressure of 175 psi for valves 12” and smaller, 150 psi for valves 14” and larger. Valves shall be bi-directional and meet the pressure rating in both directions of flow. The plug valve body shall be cast iron ASTM A126 Class B with welded-in overlay of 90% nickel alloy content on all surfaces contacting the face of the plug. Sprayed, plated, nickel welded rings or seats screwed into the body are not acceptable.

All plug valves 12” and smaller shall have round port design that provides a minimum 80% port area. The valve plug shall be ductile iron ASTM A536 Grade 65-45-12 up to 20-inches in diameter, with EPDM, Buna N, or Neoprene resilient seating surface to mate with the body seat. Valves 24-inches and larger may have plugs made of cast iron in accordance with ASTM A126 class B. Large plug valves with rectangular plugs shall provide clean passage for a solid sphere of at least 67% of the adjoining pipe diameter to facilitate pigging of the force main. Force main plug valves with rectangular port shall be "full-port" cross-sectional area perpendicular to the flow of at least 100% of the adjoining pipe.

All buried plug valves shall be provided with worm gear actuators. All plug valves shall be buried and provided with a 2-inch operator nut and valve box as shown in the details. Plug valves greater than 12-inches shall be installed such that the actuator and gearing is accessible in a manhole as shown in the details. All plug valves shall be provided with typical mechanical joint end connections and restrained with wedge action retainer glands on both ends of the valve assembly as described herein.

Valves shall be installed according to the manufacturer’s recommendations. Typically for wastewater this means installing the seat side toward the pump station so that the flow is against the face of the plug in the closed position. In the open position, the plug should rotate up to the top of the pipeline which may require installing the valve on its side.

4. Rubber Seated Ball Valve: For larger diameter force mains where plug valves are not available, rubber seated ball valves shall be of the tight-closing, shaft-mounted type that fully comply with AWWA Standard C507 to provide a full port unobstructed waterway with no additional pressure drop. Design pressure ratings shall be 150 psi or greater and provide tight shutoff against flow. With the valve in the closed position, the rubber seated valve shall be bubble tight at rated pressure. All ball valves shall be provided in an epoxy coated manhole with worm gear actuators and a handwheel.

5. Valve Box Covers: Force main plug valves or ball valves shall have valve box covers and/or manhole lids with the word "Sewer" cast into them.

6. Combination Air Valves shall be provided to purge air from the system at startup, vent small pockets of air while the system is being pressurized and running, and prevent critical vacuum conditions during draining. Combination air valves

approved for use in wastewater force main installations shall be installed at all high points of wastewater force mains 6 inches in diameter or larger and at other locations, such as major changes in slope, as directed by the Town. A high point shall be determined as any high location where the difference between the high elevation and adjacent low elevation exceeds 10-ft unless otherwise determined by the Director of Water Resources based on special circumstances. The combination air valve shall automatically exhaust large volumes of air from the system when it is being filled and allow air to re-enter the pipe when the system is being drained. The wastewater force main shall be installed at a continuous grade between low and high points without intermediate high points unless an air release valve is being installed. A minimum pipe slope of 1 foot in 500 feet should be maintained. Combination air valves shall be sized by the Engineer and approved by the Town.

a) Combination air valves shall be of the single housing style with Type 304 or 316 stainless steel body that combines the operation of both an air/vacuum and air release valve. The valve must meet the requirements of AWWA C512 and be installed in accordance with the Details. The valve shall have a minimum 145-psi working pressure unless the pipeline design requires a higher pressure rating.

b) The valve shall have a minimum 2-inch male NPT inlet for a 2-inch valve assembly. Combination air valves sized from 3-inches to 8-inches shall be provided with studded inlet connectors or flanged connections. The combination air valve shall be provided with cylindrical shaped floats and anti-shock orifice made of high density polyethylene. Combination air valves with spherical floats shall not be accepted. All combination air valves shall be installed in accordance with the Details.

c) Installation of Combination Air Valve Assembly:

    1) The Engineer of Record shall provide ample depth of installation to accommodate the extended height of combination air valves for wastewater force mains. All combination air valves shall be connected to the main by an MJ x FLG tee with the branch diameter equal to at least half of the main diameter.

    2) The 2-inch combination air valve shall be provided with male NPT threads and isolated with a 2-inch gate valve. The isolation valve shall be provided with NPT threads and connected with brass or bronze piping.

    3) Combination air valves 3-inches and greater shall be connected by flange or studs. If needed due to a larger diameter tee, a flanged reducer shall be provided between the tee and the isolation valve. Gate valves shall be used for 3-inch assemblies. Combination air

valves 4-inches and larger shall be isolated with a plug valve. In all cases the isolation valve shall be sized equal to the combination air valve.

4) The ARV shall be installed in a 5 foot diameter manhole per the standard detail. The manhole interior surface shall receive two coats of Sherwin Williams Sher-flex or equivalent with a total dry film thickness of 80-125 mils, and all blemishes shall be touched up prior to acceptance.

7. Pigging Station: Force mains shall be constructed with a pigging/bypass connection located within 50-ft of the pump station valve vault. This pigging leg shall consist entirely of Protecto 401 coated ductile iron pipe of the same diameter as the main. A restrained MJ wye shall be provided in the main line and valved on each branch. The pigging leg shall extend out of the ground and be closed with a blind flange. The protruding pipe shall be protected by concrete bollards spaced 6-ft apart.

8. Bypass Connection Assembly: On some wastewater force mains, an additional bypass connection assembly may be required. The size, criticality and proximity to a downstream manhole will be important factors in the need for this connection. The bypass assembly shall include either a ball valve or plug valve assembly for isolation from the primary wastewater force main. Additionally, the primary force main shall be provided with a main line plug valve or ball valve on the upstream side of the bypass assembly to prevent bypass flow from draining back to the pump station. The bypass assembly shall be brought to the final graded surface with a visible blind flange assembly for connection by an outside pumping contractor.

9. Force Main Odor Control Systems: Force main odor control shall be included in the design plans for any proposed force main at discharge locations, intermediate air release locations and otherwise as directed by the Town of Apex Water Resources Department. In limited cases, air release valves located in isolated areas may be approved without odor control systems. The suggested odor control technology shall be designed by the Engineer of Record to achieve 95% or greater hydrogen sulfide removal. All systems, including those utilizing activated carbon, shall be manufactured specifically for addressing hydrogen sulfide gas. Forced air systems should be avoided due to the need to include provisions for electrical power to the odor control system. For all odor control systems, the Engineer of Record shall provide sufficient easement area for long term maintenance of the system.

10. Marker Posts: Force mains shall be marked with a plastic marker at every valve, every horizontal fitting, and spaced every 1,000 feet along the force main. The post shall having a minimum diameter of four inches and a minimum bury of thirty inches with a minimum of four feet exposed. The exposed portion shall be painted green and label “Apex Sewer”. Marker posts shall be installed through outfalls,

easements, all non-residential areas, and as directed by the Water Resources Director. Valves shall have marker posts only when they are installed outside of paved areas.

## 808 Force Main Inspections and Testing

### A. Inspections

1. All materials and equipment used in the construction of the wastewater pumping system must be verified for compliance with the Specifications (or other approval granted by the Town) by the Inspector prior to installation. Non-conforming materials or equipment shall be immediately removed from the job site.

2. Compliance with plans and Specifications shall be verified on a regular basis by the Inspector.

### B. Testing

1. General

   a) The Contractor shall furnish all materials, labor, and equipment to perform all testing. Water for testing purposes may be obtained from the Town of Apex. The Contractor shall reimburse the Town for all water used at Inside Utility Rates.

   b) All water or wastewater used during testing of the pump station, force main, or any of the systems described in this section, must be returned to the Town of Apex sanitary sewer system after proper coordination with the Town of Apex Water Resources Department.

   c) All on-site testing and/or installation verification shall be performed in the presence of the Inspector or other representative authorized by the Town.

2. Force main Testing

   a) The force main shall be tested in accordance with the water main standards set forth in Section 600.

   The following tests must be run on coupons from factory lined ductile iron pipe:
   a) ASTM B-117 Salt Spray (scribed panel) – Results to equal 0.0 undercutting after two years.
   b) ASTM G-95 Cathodic Disbondment 1.5 volts @ 77°F. Results to equal no more than 0.5mm undercutting after 30 days.
   c) Immersion testing rated on using ASTM D-714-87.
      1) 20% Sulfuric Acid – No effect after two years.
      2) 140°F 25% Sodium Hydroxide – No affect after two years.

3) 160°F Distilled Water – No effect after two years.
4) 120°F Tap Water (scribed panel) – 0.0 undercutting after two years with no effect.

d) An abrasion resistance of no more than 3 mils (0.075mm) loss after one million cycles using European Standard EN 598: 1994, Section 7.8 Abrasion Resistance.

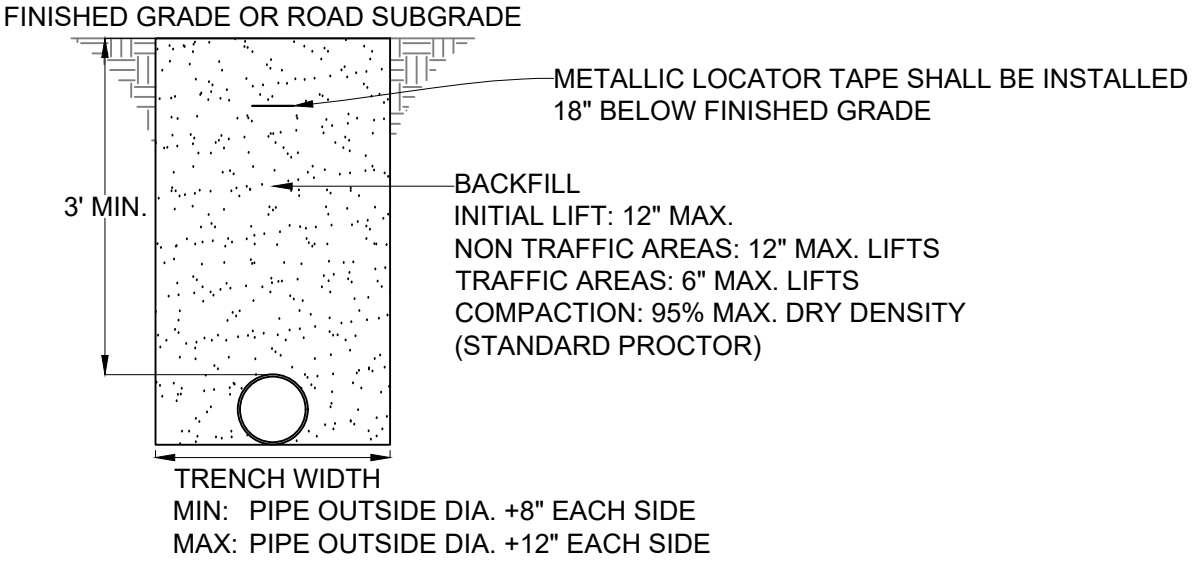


NOTES:

1. NO STONES SHALL BE INCLUDED IN THE BACKFILL MATERIAL FOR AT LEAST 2 FEET ABOVE THE TOP OF THE PIPE.
2. PROVIDE RECESSES TO RECEIVE PIPE BELL.
3. UNDERCUT UNSUITABLE MATERIAL AS DIRECTED BY THE ENGINEER AND BACKFILL WITH APPROVED MATERIAL.
4. WHERE NECESSARY, TEMPORARILY DIVERT SURFACE WATER TO MAINTAIN A DRY CONDITION IN THE PIPE FOUNDATION. DIRECT THIS TEMPORARY FLOW INTO SUITABLE EROSION CONTROL DEVICES.
5. NO ORGANIC MATERIAL PERMITTED FOR BACKFILLING.
6. FLOWABLE FILL MAY BE REQUIRED AT THE DIRECTION OF THE WATER RESOURCES DIRECTOR.

| TOWN OF APEX STANDARDS | WATER MAIN PIPE BACKFILLING | STD. NO. |
|---|---|---|
| EFFECTIVE: MARCH 23, 2021 | | 450.01 |
| | | SHEET 1 OF 1 |

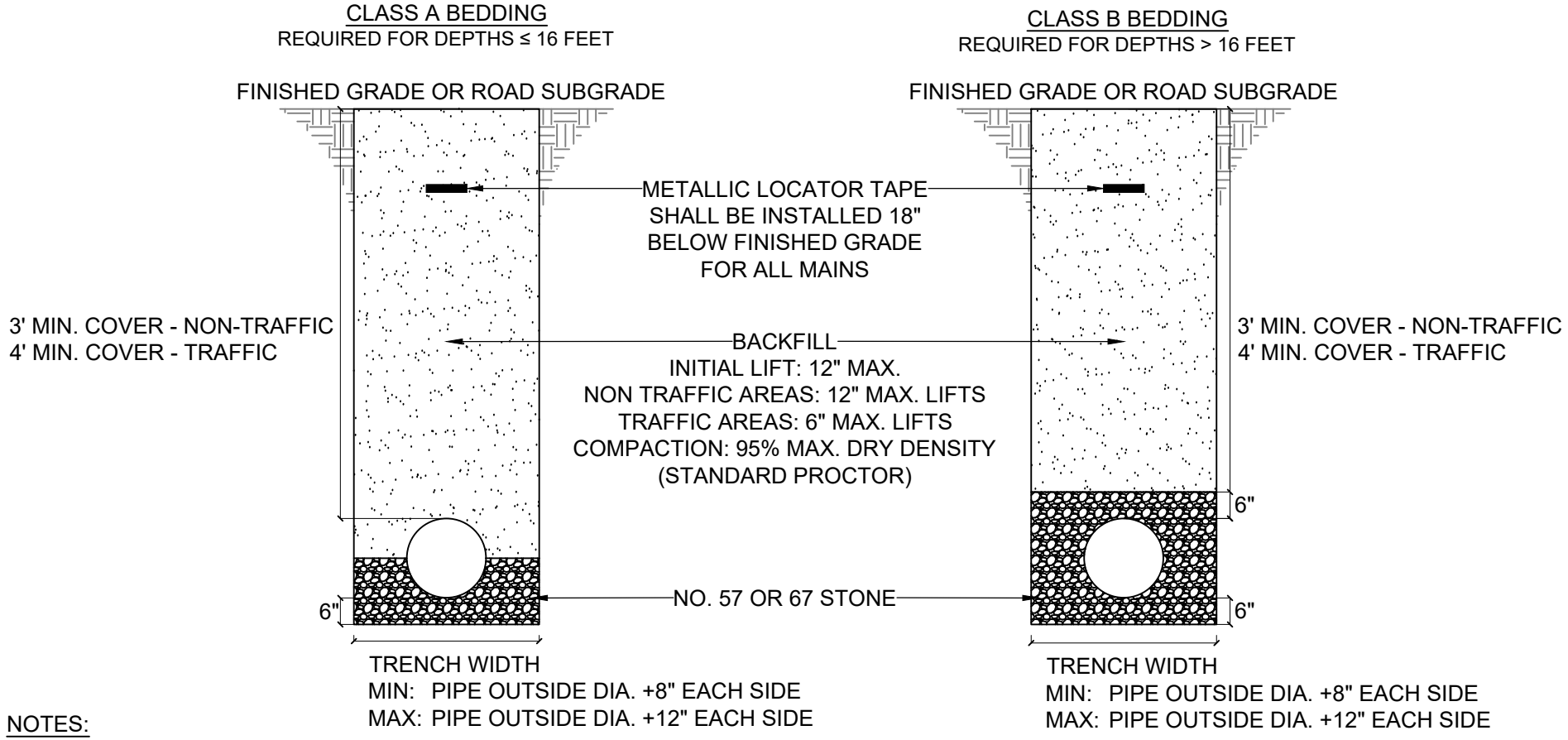


NOTES:

1. FOR TRENCHES REQUIRING SHORING & BRACING, DIMENSIONS SHALL BE TAKEN FROM THE INSIDE FACE OF THE SHORING & BRACING.
2. FLOWABLE FILL MAY BE REQUIRED AT THE DIRECTION OF THE WATER RESOURCES DIRECTOR.
3. NO STONES SHALL BE INCLUDED IN THE BACKFILL MATERIAL FOR AT LEAST 2 FEET ABOVE THE TOP OF THE PIPE.
4. PROVIDE RECESSES TO RECEIVE PIPE BELL.
5. UNDERCUT UNSUITABLE MATERIAL AS DIRECTED BY THE ENGINEER AND BACKFILL WITH APPROVED MATERIAL.
6. WHERE NECESSARY, TEMPORARILY DIVERT SURFACE WATER TO MAINTAIN A DRY CONDITION IN THE PIPE FOUNDATION. DIRECT THIS TEMPORARY FLOW INTO SUITABLE EROSION CONTROL DEVICES.
7. NO ORGANIC MATERIAL PERMITTED FOR BACKFILLING.

| TOWN OF APEX STANDARDS | SANITARY SEWER PIPE BEDDING & BACKFILLING | STD. NO. |
|---|---|---|
| EFFECTIVE: MARCH 23, 2021 | | 450.02 |
| | | SHEET 1 OF 1 |

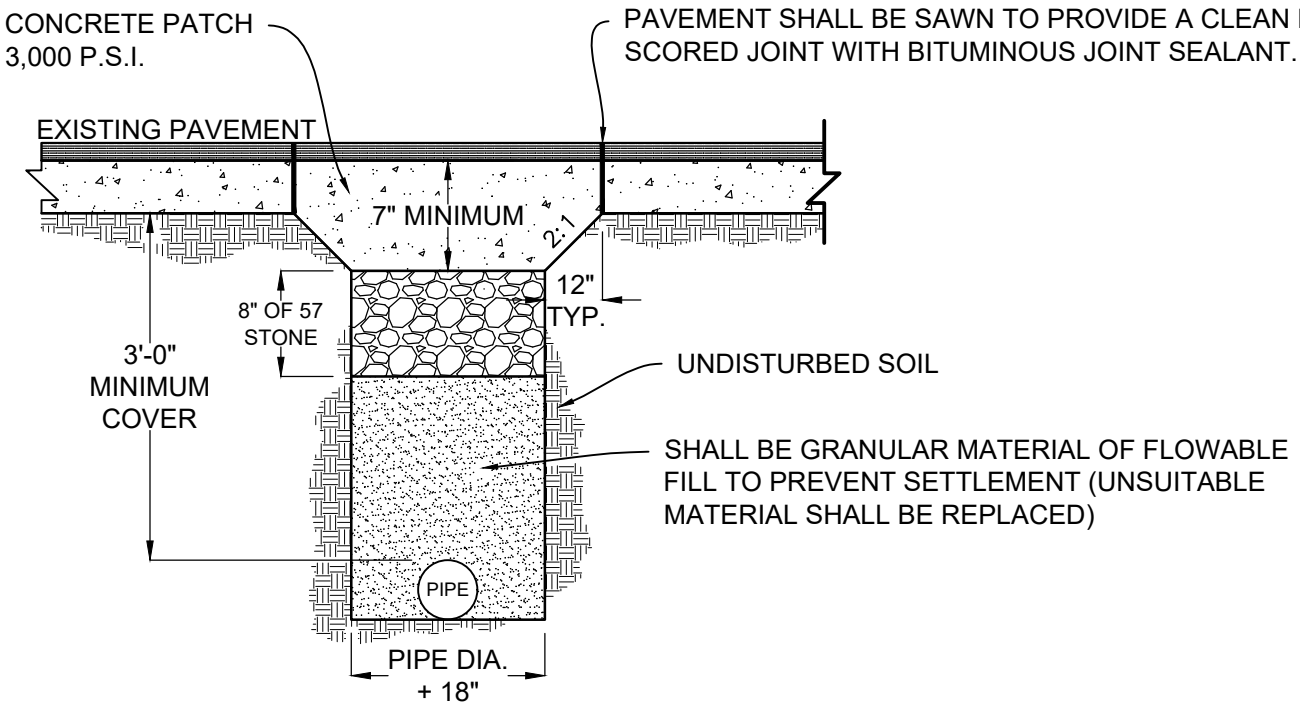


CONCRETE PAVEMENT

NOTES:

1. ALL PAVEMENT CUTS SHALL BE REPAIRED WITHIN A MAXIMUM OF SEVEN (7) DAYS FROM THE DATE THE CUT IS MADE.
2. CONCRETE TRENCH CAP ON ASPHALT STREETS SHALL BE USED ONLY DURING INCLEMENT WEATHER WHEN ASPHALT PLANTS ARE NOT OPERATING.
3. IN ALL OPEN TRENCHES, BACKFILL SHALL BE COMPACTED TO 95% MAXIMUM DRY DENSITY. THE CONTRACTOR SHALL BE RESPONSIBLE FOR VERIFYING COMPACTION REQUIREMENTS BY SOILS TESTING CERTIFIED BY A LICENSED PROFESSIONAL GEOTECHNICAL ENGINEER.
4. BACKFILL WITH A HIGH CLAY CONTENT, HIGH SHRINK-SWELL POTENTIAL, OR HIGH MOISTURE CONTENT THAT CANNOT MEET COMPACTION REQUIREMENTS SHALL BE DEEMED UNSUITABLE AND SHALL BE REPLACED WITH SUITABLE BACKFILL MATERIAL.
5. ALL PAVEMENT PATCHES SHALL PROVIDE A UNIFORM AND SMOOTH DRIVING SURFACE.
6. OPEN CUT OF NCDOT ROADWAYS WILL NOT BE ALLOWED WITHOUT PRIOR APPROVAL FROM THE NCDOT DISTRICT ENGINEER OR AS INDICATED ON THE DRAWING

| TOWN OF APEX STANDARDS | CONCRETE REPAIR | STD. NO. |
|---|---|---|
| EFFECTIVE: MARCH 23, 2021 | | 450.03 |
| | | SHEET 1 OF 1 |

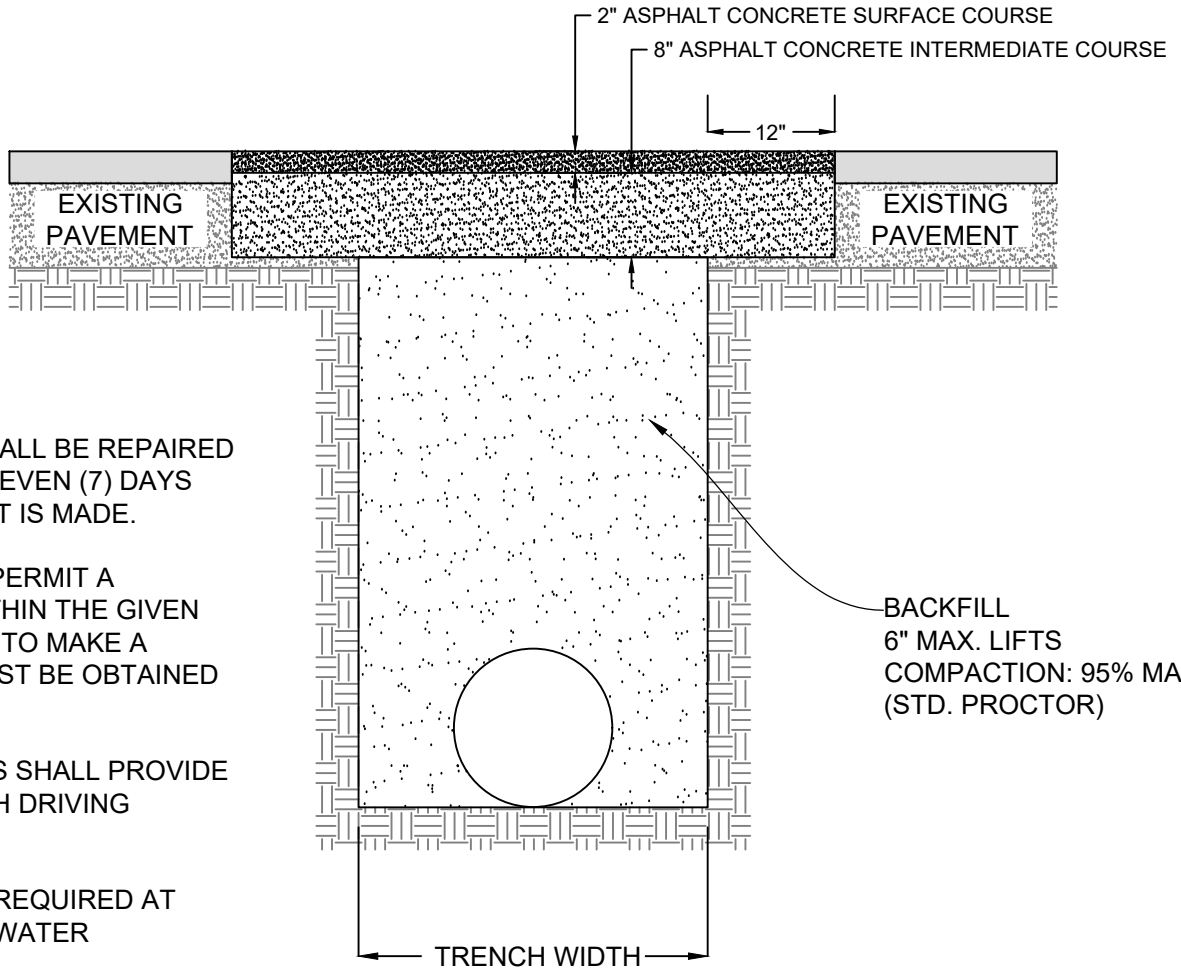


MIN: PIPE OUTSIDE DIAMETER + 8" EACH SIDE
MAX: PIPE OUTSIDE DIAMETER +12" EACH SIDE

NOTES:

1. ALL PAVEMENT CUTS SHALL BE REPAIRED WITHIN A MAXIMUM OF SEVEN (7) DAYS FROM THE DATE THE CUT IS MADE.
2. IF CONDITIONS DO NOT PERMIT A PERMANENT REPAIR WITHIN THE GIVEN TIME LIMIT, PERMISSION TO MAKE A TEMPORARY REPAIR MUST BE OBTAINED FROM THE TOWN.
3. ALL PAVEMENT PATCHES SHALL PROVIDE A UNIFORM AND SMOOTH DRIVING SURFACE.
4. FLOWABLE FILL MAY BE REQUIRED AT THE DIRECTION OF THE WATER RESOURCES DIRECTOR.

| TOWN OF APEX STANDARDS | TRENCH & PAVEMENT REPAIR SECTION FOR ASPHALT | STD. NO. 450.04 |
|---|---|---|
| EFFECTIVE: MARCH 23, 2021 | | SHEET 1 OF 1 |

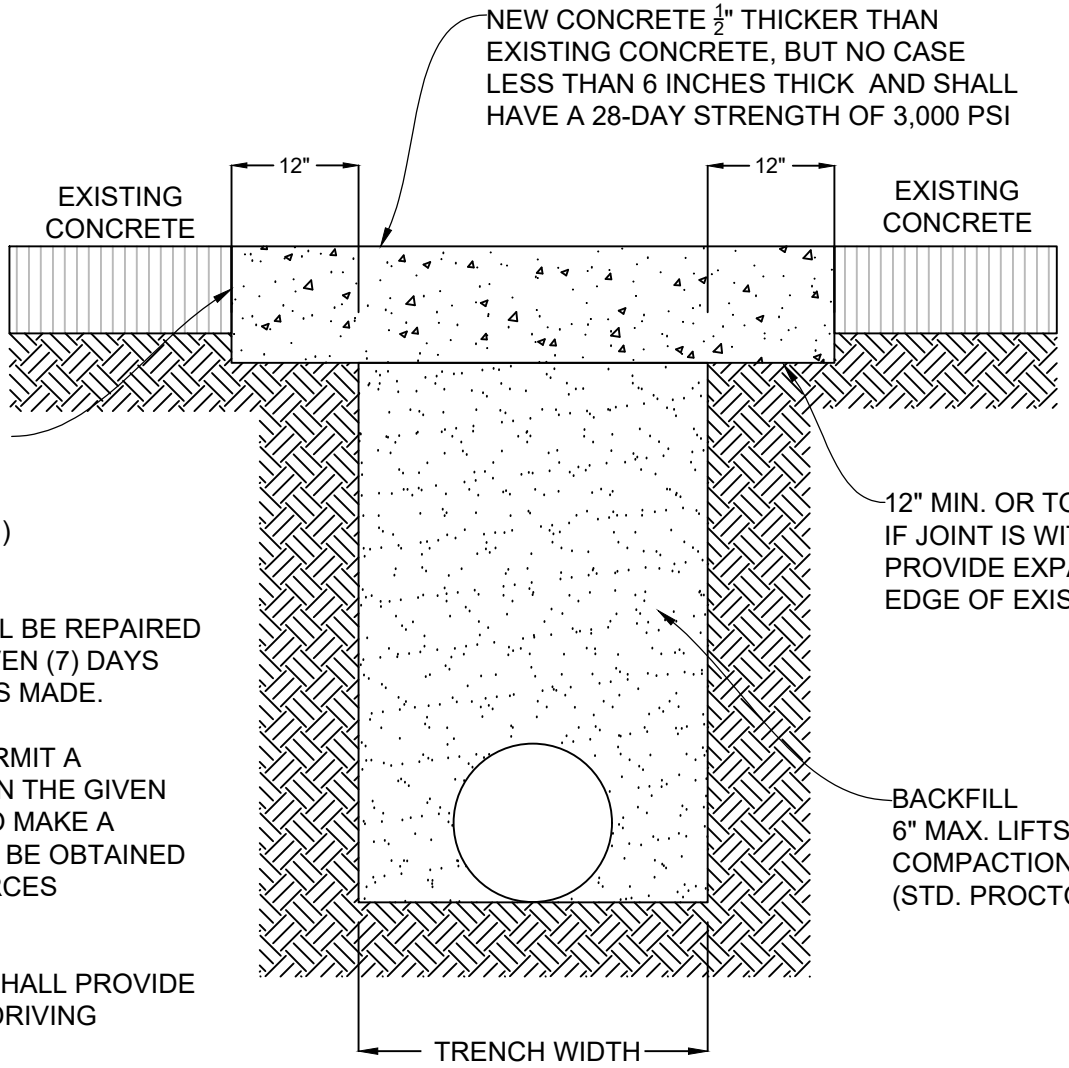


MIN: PIPE OUTSIDE DIAMETER + 8" EACH SIDE
MAX: PIPE OUTSIDE DIAMETER +12" EACH SIDE

NOTES:

1. ALL PAVEMENT CUTS SHALL BE REPAIRED WITHIN A MAXIMUM OF SEVEN (7) DAYS FROM THE DATE THE CUT IS MADE.

2. IF CONDITIONS DO NOT PERMIT A PERMANENT REPAIR WITHIN THE GIVEN TIME LIMIT, PERMISSION TO MAKE A TEMPORARY REPAIR MUST BE OBTAINED FROM THE WATER RESOURCES DIRECTOR.

3. ALL PAVEMENT PATCHES SHALL PROVIDE A UNIFORM AND SMOOTH DRIVING SURFACE.

4. FLOWABLE FILL MAY BE REQUIRE THE DIRECTION OF THE WATER RESOURCES DIRECTOR.

| TOWN OF APEX STANDARDS | TRENCH & PAVEMENT REPAIR SECTI R CONCRETE | STD. NO. 450.05 |
|---|---|---|
| EFFECTIVE: MARCH 23, 2021 | | SHEET 1 OF 1 |

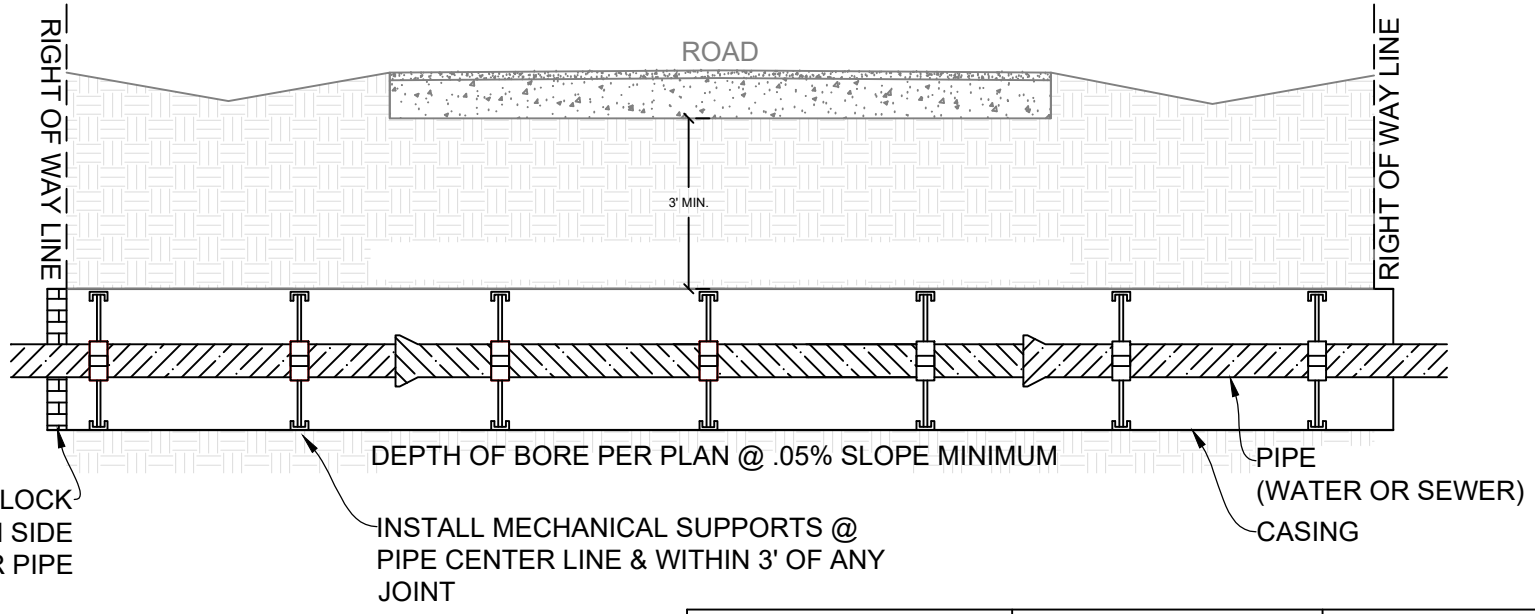


NOTES:

1. CASING SHALL BE UNCOATED SPIRAL WELDED STEEL MEETING ASTM A-139, GRADE B WITH A YIELD STRENGTH OF 35,000 PSI.
2. CROSSINGS ON NCDOT MAINTAINED ROADS TO BE IN ACCORDANCE WITH CURRENT NCDOT STANDARDS AND APPROVED ENCROACHMENT AGREEMENT.
3. RESTRAINED JOINT PIPE ONLY. MEGE-LUGS ARE NOT PERMITTED.
4. SUPPORTS SHALL BE MANUFACTURED BY ADVANCE PRODUCTS & SYSTEMS, INC, PIPELINE SEAL AND INSULATOR LTD, OR BWM COMPANY.
5. THREE SUPPORTS SHALL BE INSTALLED ON EACH PIPE SEGMENT.
6. LARGER ENCASEMENT SIZES MAY BE UTILIZED AT THE DISCRETION OF THE DESIGN ENGINEER AND/OR CONTRACTOR FOR EASE OF INSTALLATION AS LONG AS ALL OTHER DESIGN CRITERIA IS MET.
7. ALL PIPES 36" AND LARGER SHALL REQUIRE 4 SUPPORTS.

| Carrier Pipe Nominal Diameter (inches) | Casing Minimum Inside Diameter (inches) | Casing Nominal Wall Thickness (inches) |
|---|---|---|
| 6 | 14 | 0.375 |
| 8 | 16 | 0.375 |
| 10 | 18 | 0.375 |
| 12 | 20 | 0.375 |
| 14 | 24 | 0.375 |
| 16 | 30 | 0.500 |
| 18 | 30 | 0.500 |
| 20 | 36 | 0.500 |
| 24 | 36 | 0.625 |
| 30 | 42 | 0.625 |
| 36 | 48 | 0.750 |
| 42 | 54 | 0.875 |

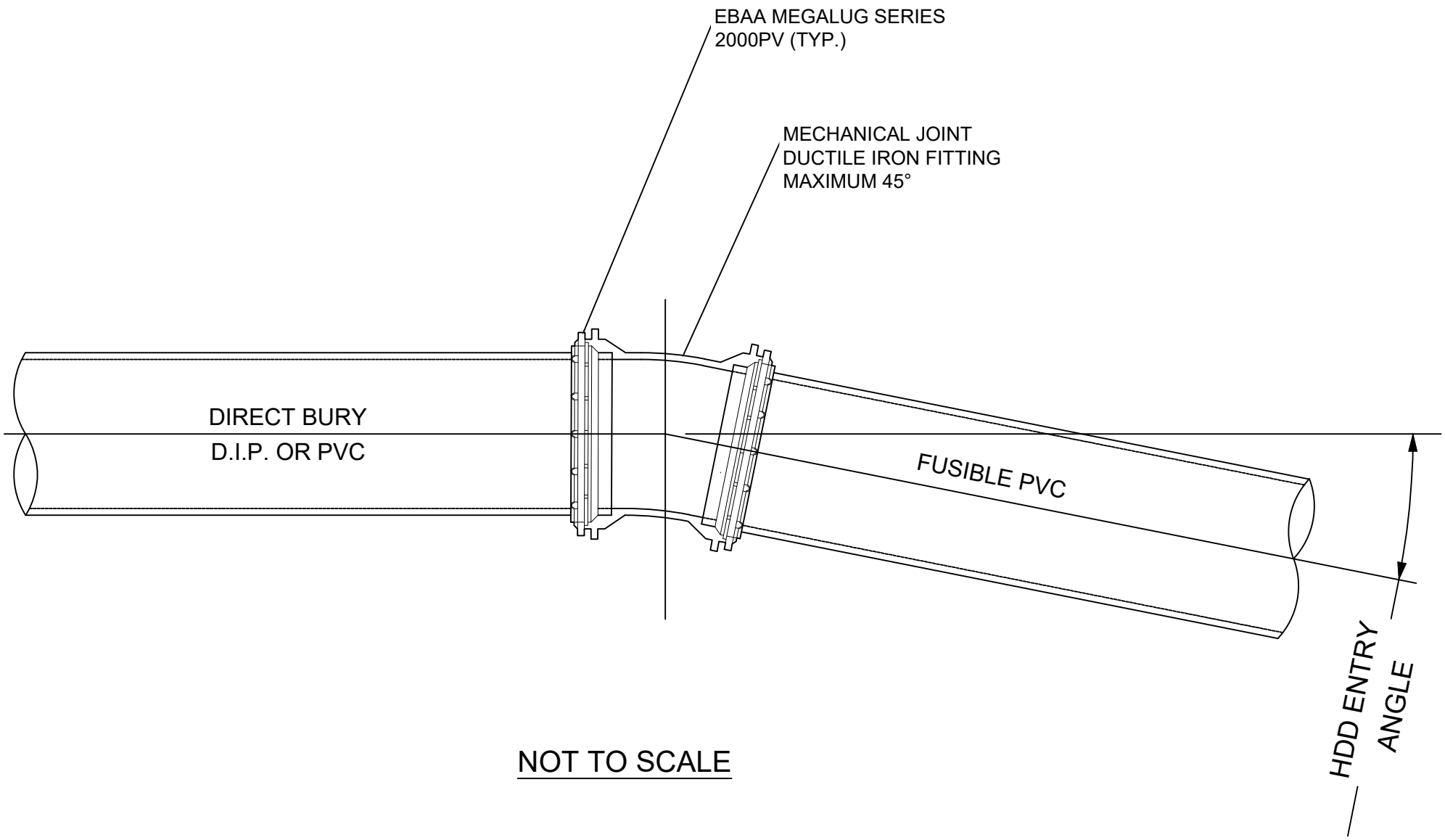


NOT TO SCALE

| TOWN OF APEX STANDARDS | HDD TRANSITION FITTING | STD. NO. |
|---|---|---|
| EFFECTIVE: MARCH 23, 2021 | | 450.07 |
| | | SHEET 1 OF 1 |

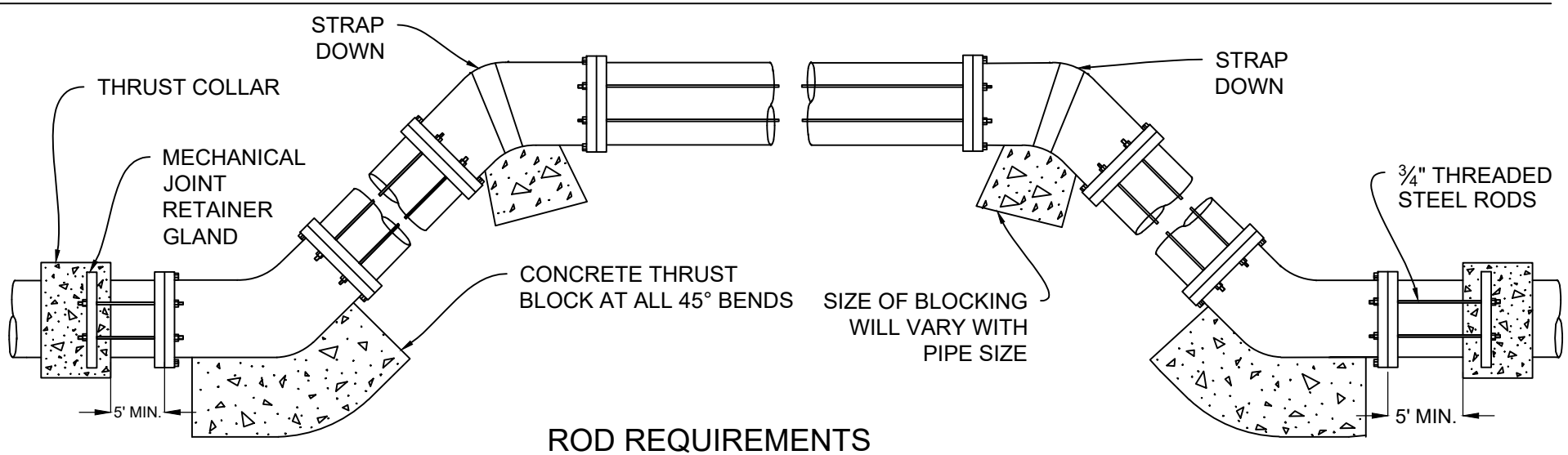


## ROD REQUIREMENTS

| SIZE OF 45 BEND | STATIC THRUST IN POUNDS | NO. OF RODS REQUIRED |
|---|---|---|
| 6" | 4,328 | 2 |
| 8" | 7,694 | 4 |
| 10" | 12,503 | 4 |
| 12" | 17,312 | 4 |
| 14" | 24,046 | 6 |
| 16" | 30,779 | 8 |
| 18" | 50,016 | 8 |
| 24" | 69,252 | 8 |

NOTES:

1. STEEL RODS AND BOLTS SHALL BE 3/4" HOT DIPPED GALVANIZED.
2. CONCRETE SHALL NOT CONTACT BOLTS OR ENDS OF MECHANICAL JOINT BENDS.
3. RESTRAINED MECHANICAL GLANDS TO BE USED AT ALL FITTINGS.
4. MUST USE DUCTILE IRON EYE BOLTS WHERE NECESSARY.
5. 3' MINIMUM COVER MUST BE MAINTAINED ON ALL MAINS.
6. ADD MECHANICAL JOINT RETAINER GLANDS THROUGHOUT ASSEMBLY.

| TOWN OF APEX STANDARDS | VERTICAL BEND | STD. NO. |
|---|---|---|
| EFFECTIVE: MARCH 23, 2021 | | 450.08 |
| | | SHEET 1 OF 1 |

NOTES:

1. NO CONCRETE CRADLE REQUIRED FOR SEPARATION GREATER THAN 18"
2. ALL PIPE BELLS SHALL BE LOCATED OUTSIDE OF CONCRETE CRADLE.

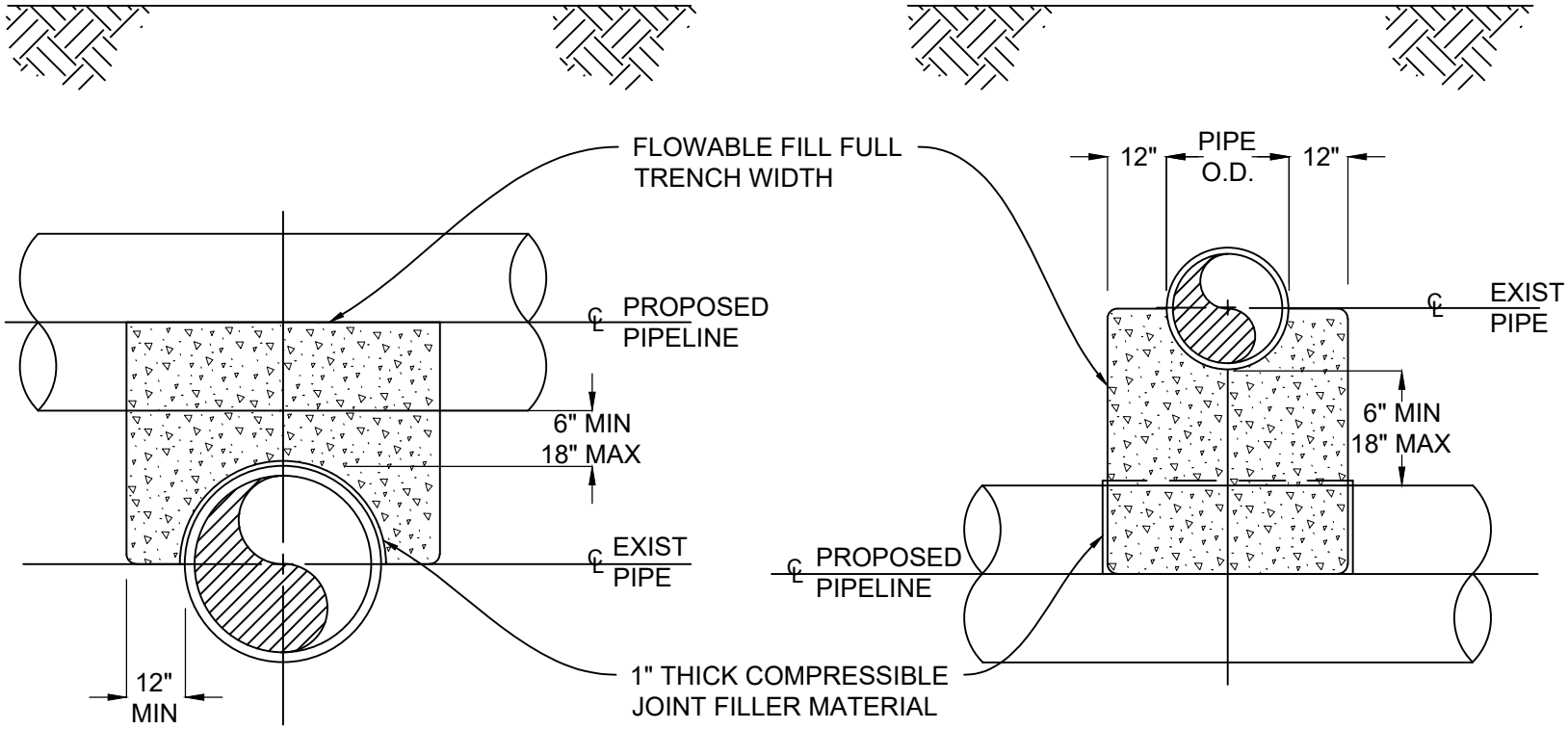


PROPOSED PIPELINE OVER EXISTING PIPE

PROPOSED PIPELINE UNDER EXISTING PIPE

| TOWN OF APEX STANDARDS | CONCRETE CRADLE | STD. NO. |
|---|---|---|
| EFFECTIVE: MARCH 23, 2021 | | 450.09 |
| | | SHEET 1 OF 1 |

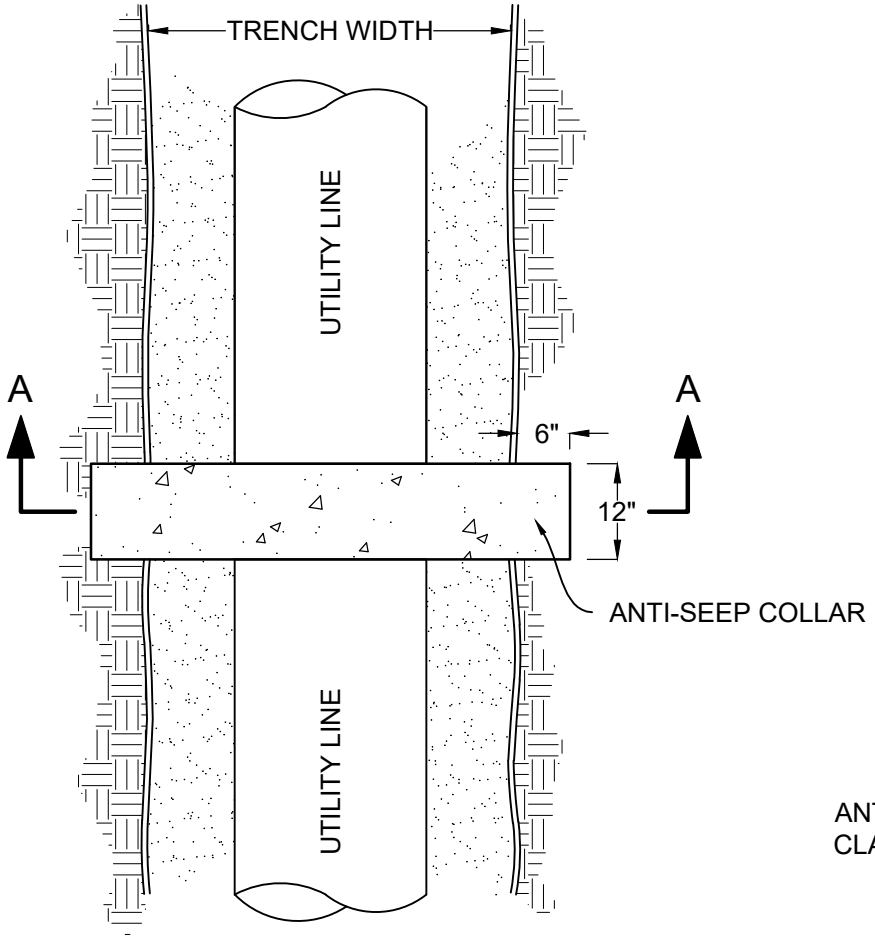


PLAN VIEW

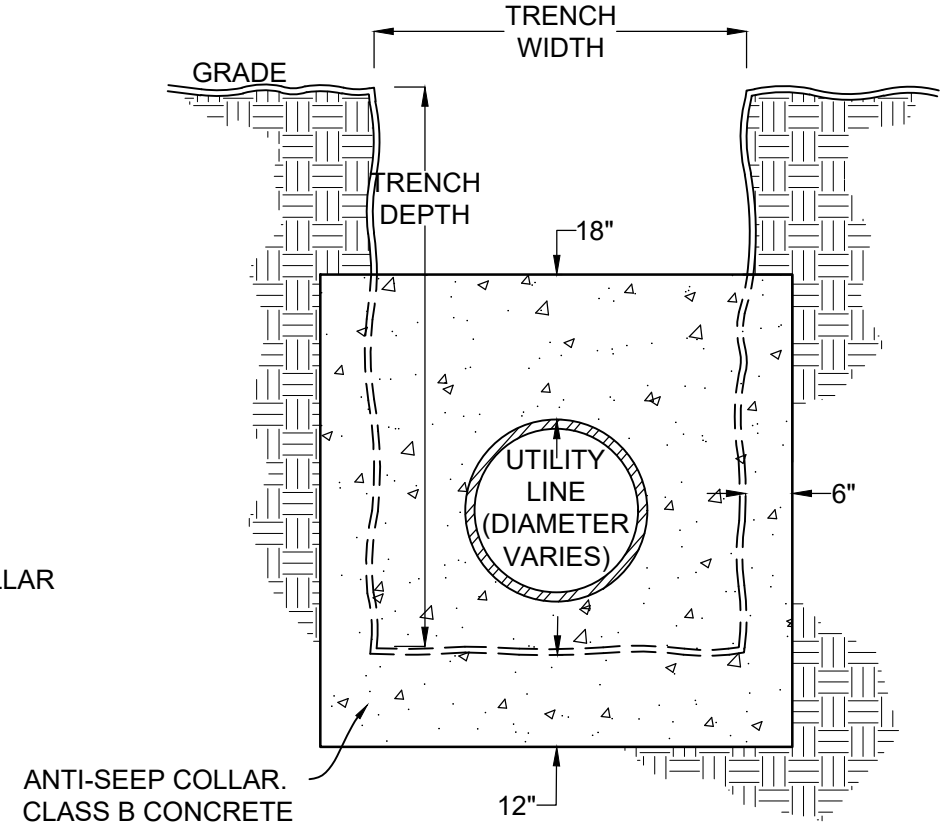


SECTION A-A

| TOWN OF APEX STANDARDS | ANTI-SEEP COLLAR | STD. NO. |
|---|---|---|
| EFFECTIVE: MARCH 23, 2021 | - Page 322 - | 450.10 |
| | | SHEET 1 OF 1 |

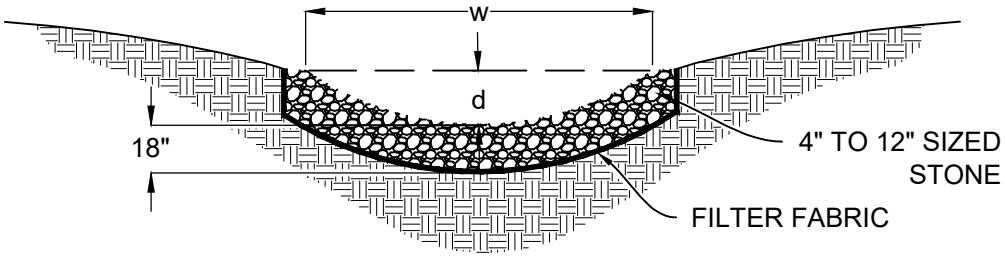


PARABOLIC-SHAPED

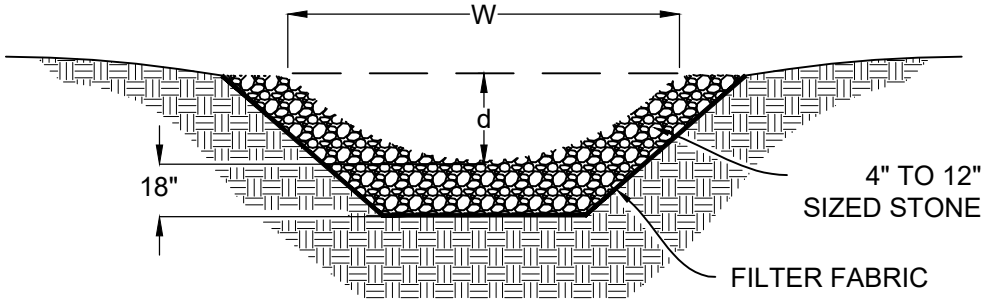


TRAPEZOIDAL
(TYPICAL RIPRAP CHANNEL)

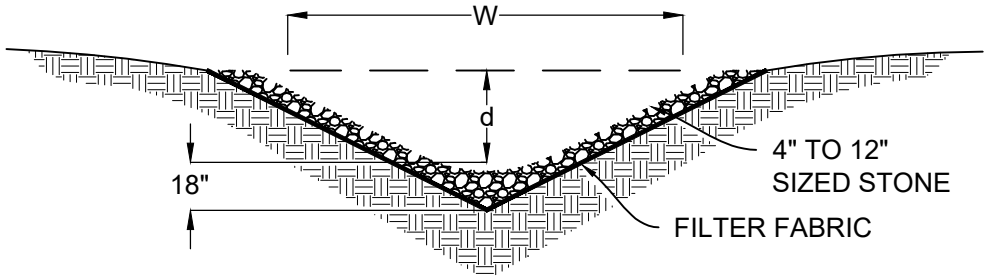


V-SHAPED

NOTES:

1. TO BE USED WHERE EXCESSIVE STORM WATER VELOCITIES PROHIBIT VEGETATIVE LININGS.
2. SIZE OF STONE MUST BE DETERMINED BY APPROPRIATE DESIGN PROCEDURE.
3. DIMENSIONS FOR d & W VARIES ACCORDING TO DESIGN.

| TOWN OF APEX STANDARDS | OPEN CUT DITCH | STD. NO. |
|---|---|---|
| EFFECTIVE: MARCH 23, 2021 | | 450.11 |
| | | SHEET 1 OF 1 |

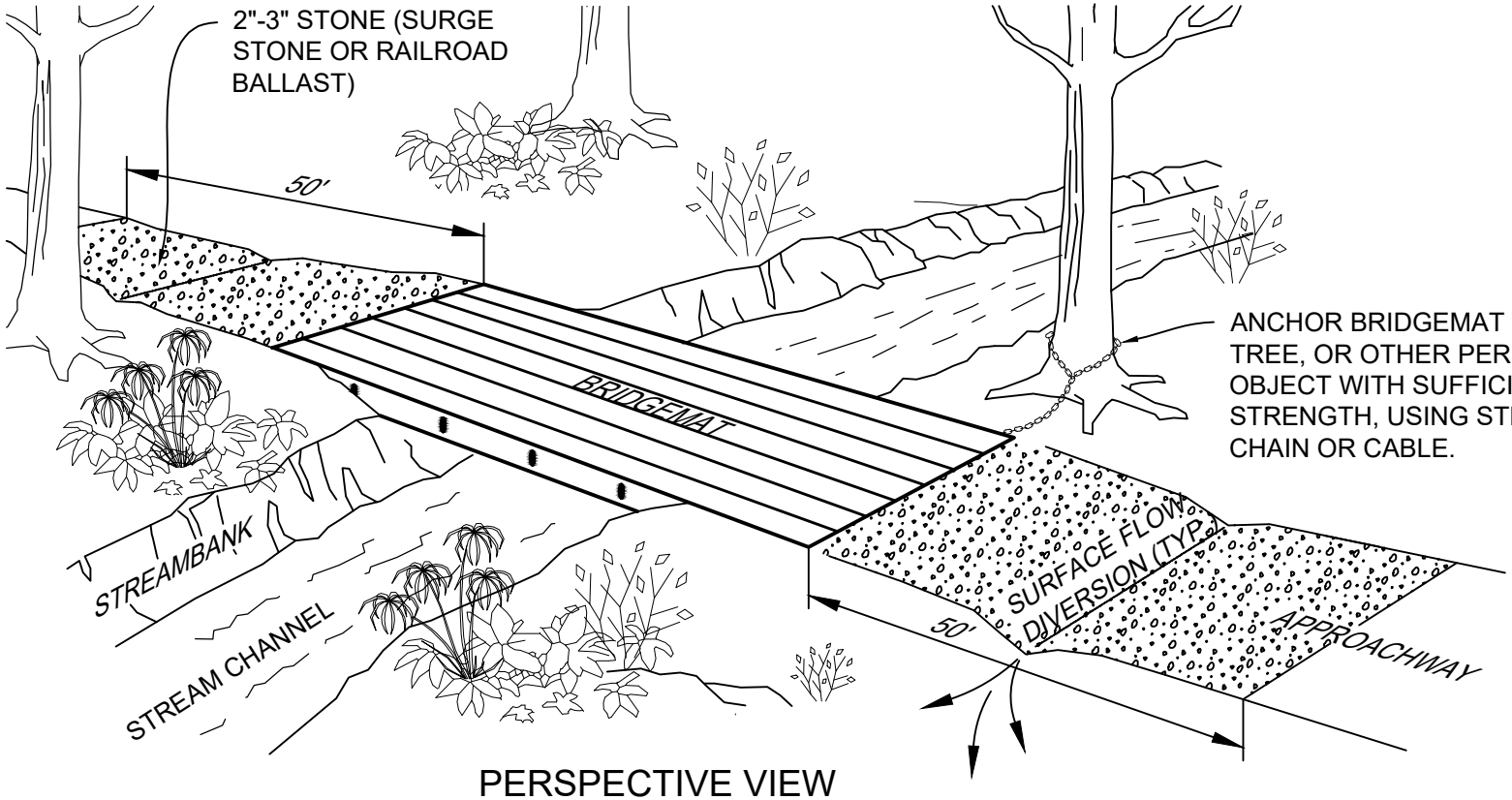


PERSPECTIVE VIEW

NOT TO SCALE

SIDE VIEW

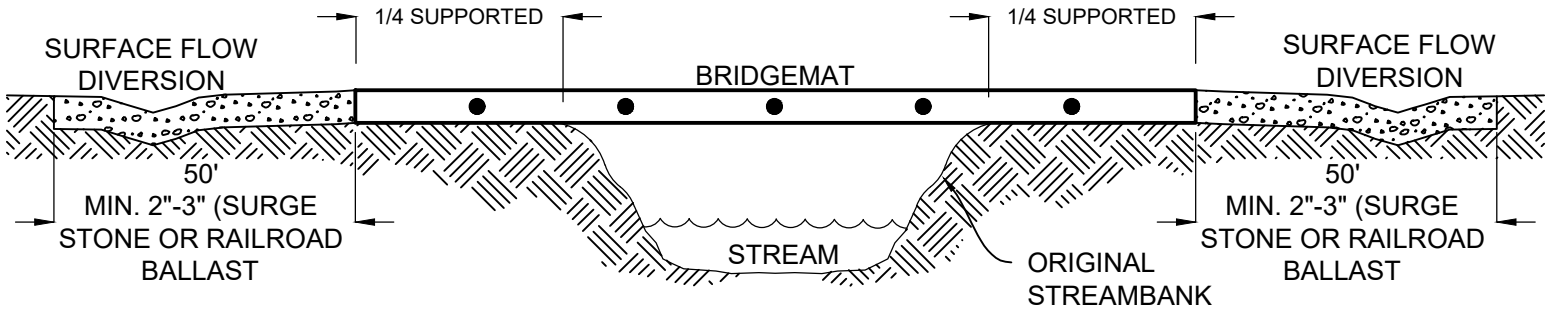


| TOWN OF APEX STANDARDS | VEHICLE CROSSING AT STREAM | STD. NO. |
|---|---|---|
| EFFECTIVE: MARCH 23, 2021 | - Page 324 - | 450.12 |
| | | SHEET 1 OF 2 |

INSTALLATION NOTES:

1. REFER TO "NORTH CAROLINA DIVISION OF FOREST RESOURCES" LITERATURE, INSTALLATION MAINTENANCE GUIDELINES, & "NORTHCAROLINA FORESTRY BMP MANUAL-2006".

2. USE A BULLDOZER, KNUCKLEBOOM LOADER, OR SKIDDER TO INSTALL & REMOVE DRAGLINE MATS.

3. KEEP HEAVY EQUIPMENT OUT OF STREAM.

4. INSTALL WATER DIVERSION DEVICES (WATER BARS, TURNOUTS, BROAD-BASED DIPS, ETC.) ON BOTH SIDES OF THE MATS.

5. STABILIZE EXPOSED MINERAL SOIL WITH TREE TOPS OR BRUSH DURING MAT INSTALLATION, AND SEEDING/MULCH AFTER MAT REMOVAL.

6. INSTALL MATS TO CREATE A MINIMUM TEN FOOT BRIDGE WIDTH.

7. MATS SHALL BE INSTALLED SUCH THAT THERE ARE NO GAPS BETWEEN THE MATS AND NO GAPS BETWEEN THE END OF THE MATS AND STONE APPROACHES.

MAINTENANCE NOTES:

1. KEEP MATS' SURFACE FREE OF MINERAL SOIL AND DEBRIS THAT COULD ENTER STREAM.

2. PERIODICALLY CHECK MAT HARDWARE; RETIGHTEN NUTS & CABLE CLAMPS AS NECESSARY TO MAINTAIN BRIDGE STRENGTH AND INTEGRITY.

3. IMMEDIATELY REMOVE ANY DEBRIS WHICH ENTERS THE STREAM AT THE CROSSING LOCATION.

REMOVAL NOTES:

1. CLEAN OFF BRIDGE SURFACE.

2. REMOVE MATS BY USING MAT CABLE LOOP OR SKIDDER GRAPPLE.

3. PERMANENTLY STABILIZE DISTURBED PORTIONS OF STREAM BANK AND APPROACH ROADS WITH PERENNIAL GRASSES/MULCH (OR WETLAND MIX WHEN APPLICABLE).

4. LEAVE APPROPRIATE WATER DIVERSION STRUCTURES IN PLACE ON BOTH SIDES OF STREAM.

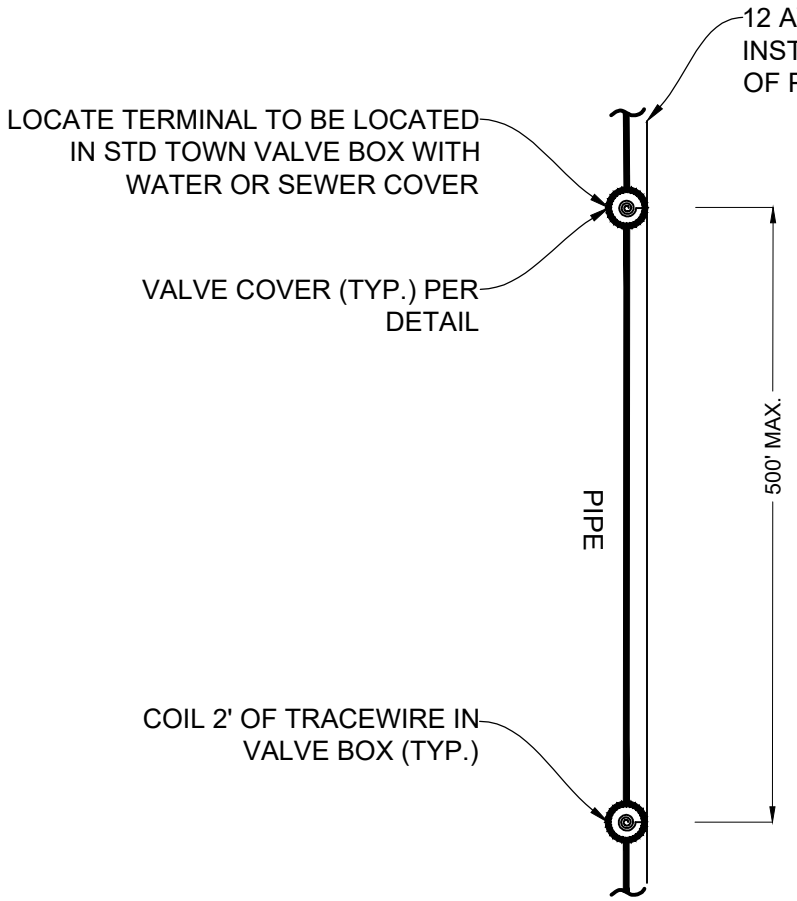


## OVERALL PIPE VIEW

NOT TO SCALE

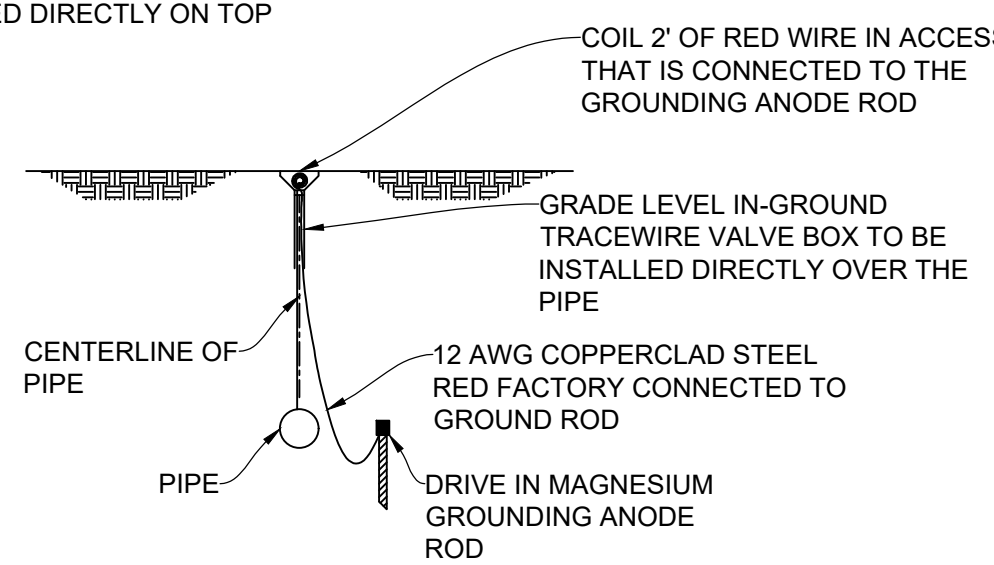


## PIPE SECTION VIEW

NOT TO SCALE

NOTE:

1. TRACER WIRE AND ACCESSORIES SHALL BE BLUE FOR WATER INSTALLATIONS AND GREEN FOR WASTEWATER INSTALLATIONS.

2. TEST STATIONS SHALL BE 2.5" DIAMETER WITH 2 TERMINALS, GREEN OR BLUE TOP AND BE EQUIVALENT TO BINGHAM AND TAYLOR MODEL P-225SR OR COPPERHEAD MODEL LD12TP AND SHALL BE INSTALLED IN A TOWN STANDARD VALVE BOX PER STANDARD DETAIL.

| TOWN OF APEX STANDARDS | TRACER WIRE | STD. NO. |
|---|---|---|
| EFFECTIVE: MARCH 23, 2021 | - Page 326 - | 450.13 |
| | | SHEET 1 OF 1 |

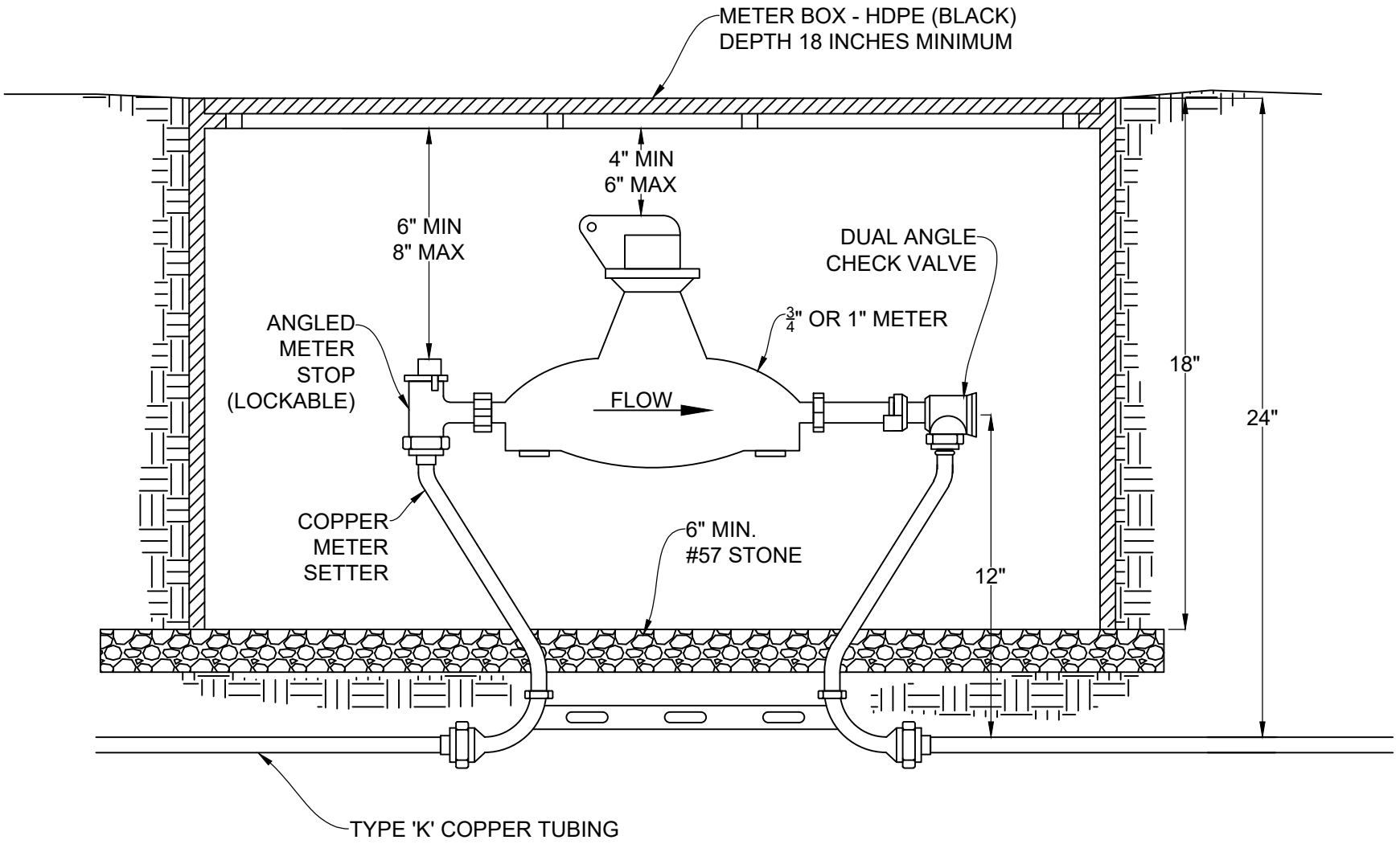


**(SEE SHEET 2 OF 2 FOR NOTES)**

| TOWN OF APEX STANDARDS | 3/4" & 1" WATER SERVICE & METER BOX | STD. NO. 600.01 |
|---|---|---|
| EFFECTIVE: MARCH 23, 2021 | | SHEET 1 OF 2 |

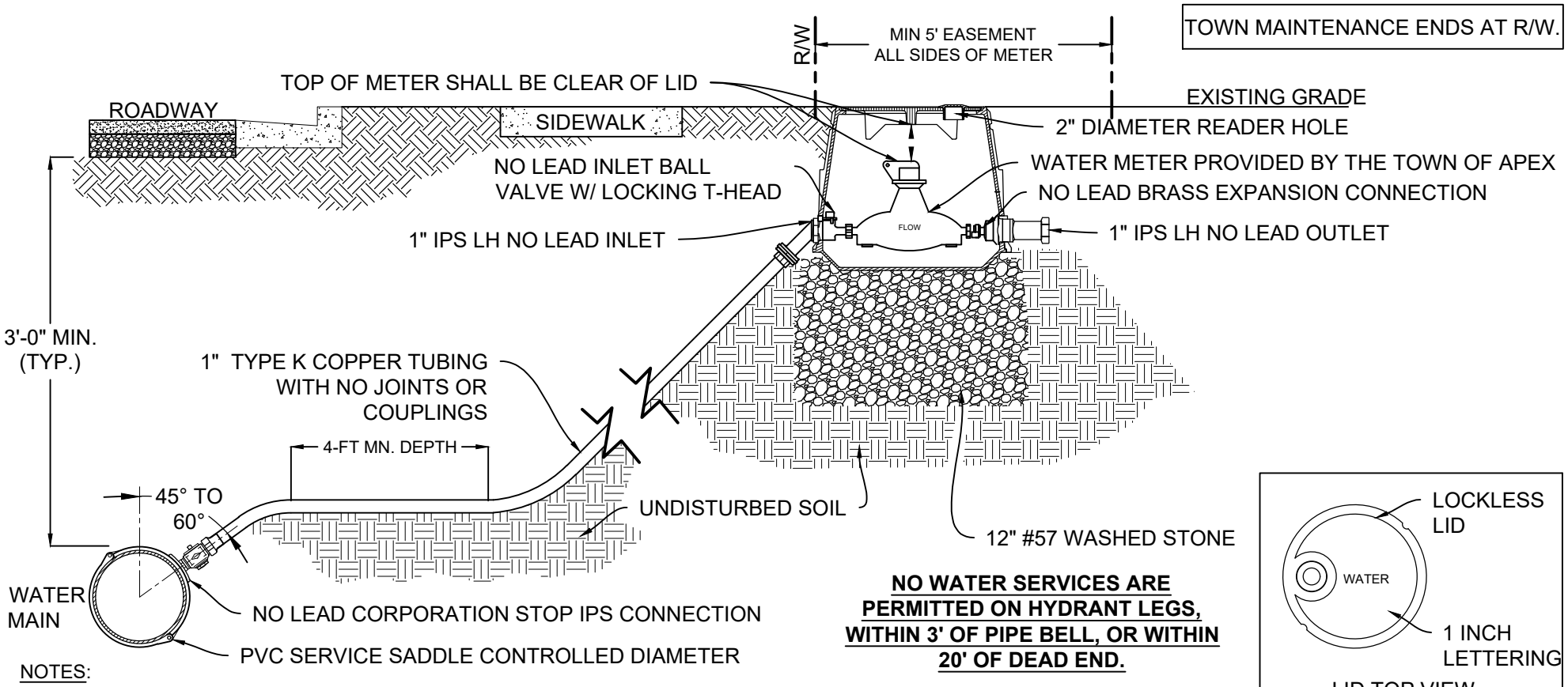


NOTES:

1. WATER METER SHALL NOT BE LOCATED IN AREAS SUBJECT TO VEHICULAR TRAFFIC.
2. ALL METER BOXES AND LIDS SHALL BE APPROVED BY THE TOWN.
3. ALL SERVICE LINES, VALVES AND FITTINGS SHALL COMPLY WITH AWWA C800.
4. THE INTERIOR AND EXTERIOR OF THE BOX AND LID SHALL BE COLORED BLACK.
5. ALL RELOCATIONS OF EXISTING OR PERMITTED INFRASTRUCTURE INCLUDING SERVICE PIPING AND METER BOXES SHALL BE PERMITTED AND INSPECTED IN CONFORMANCE WITH TOWN POLICIES AND PROCEDURES.
6. BOX AND LID SHALL BE CAST IRON, ASTM A48, CLASS 25.
7. COPPER TUBING SHALL BE LEAD FREE, TYPE K SOFT COPPER TUBING CONFORMING TO ASTM STANDARD B58.
8. MARKING TAPE SHALL BE INSTALLED FOR ALL SERVICE CONNECTIONS FROM THE MAIN LINE TO THE METER FOR ALL NEW CONSTRUCTION OR RETROFIT INSTALLATIONS USING OPEN TRENCH METHODS.

| TOWN OF APEX STANDARDS | 3/4" & 1" WATER SERVICE & METER BOX | STD. NO. |
|---|---|---|
| EFFECTIVE: MARCH 23, 2021 | | 600.01 |
| | | SHEET 2 OF 2 |

NOTES:

1. METER YOKE - MUELLER, MCDONALD OR FORD WITH LOCKABLE BY-PASS AND METER STOPS.

2. BOX MAY BE CONCRETE (STAY RIGHT MB 2737 OR EQUAL) OR LIGHTWEIGHT POLYMER CONCRETE.

3. WATER SERVICES GREATER THAN $\frac{3}{4}$" IN SIZE USED IN GANG METER INSTALLATIONS SHALL REQUIRE DESIGN CALCULATIONS, CERTIFIED BY A PROFESSIONAL ENGINEER AND SUBMITTED TO THE TOWN BEFORE CONSTRUCTION PLAN APPROVAL.

4. SEE SECTION 602 F.3 FOR METER INSTALLATION CONDITIONS.

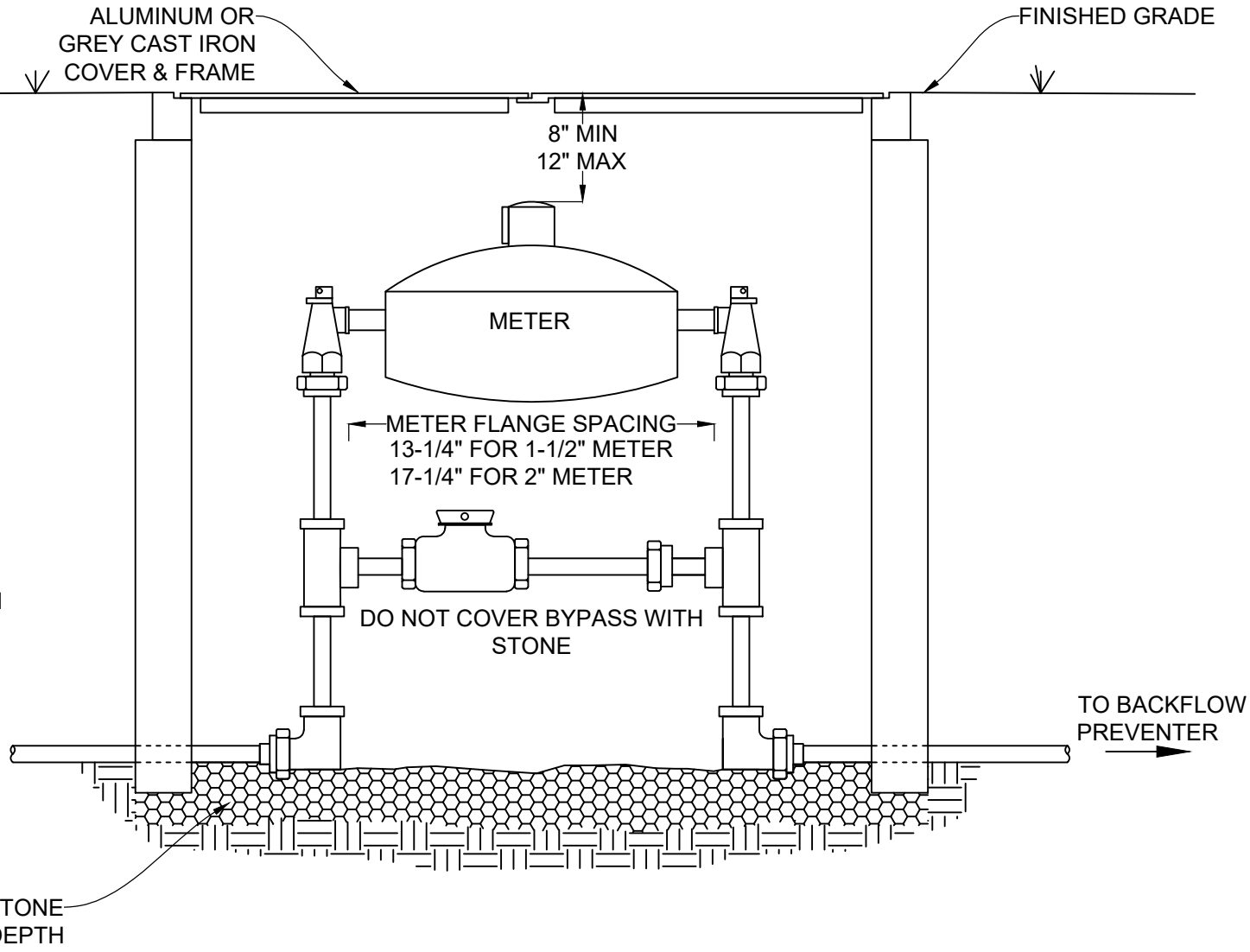


| TOWN OF APEX STANDARDS | 1-1/2" & 2" METER INSTALLATION & VAULT | STD. NO. |
|---|---|---|
| EFFECTIVE: MARCH 23, 2021 | - Page 329 - | 600.02 |
| | | SHEET 1 OF 1 |

NOTES:

1. INSTALLATIONS LARGER THAN 3" SHALL REQUIRE A SPECIAL DETAIL AND PRIOR APPROVAL FROM THE WATER RESOURCES DIRECTOR.
2. ALL PIPE SHALL BE DUCTILE IRON. A BYPASS LINE MUST BE INCLUDED.
3. THERE SHALL BE A MINIMUM 5 FOOT EASEMENT AROUND ALL SIDES OF THE METER VAULT.

| METER | OPENING |
|---|---|
| 3" | 12 ½" |
| 4" | 14 ½" |
| 6" | 18 ½" |
| 8" | 20 ½" |

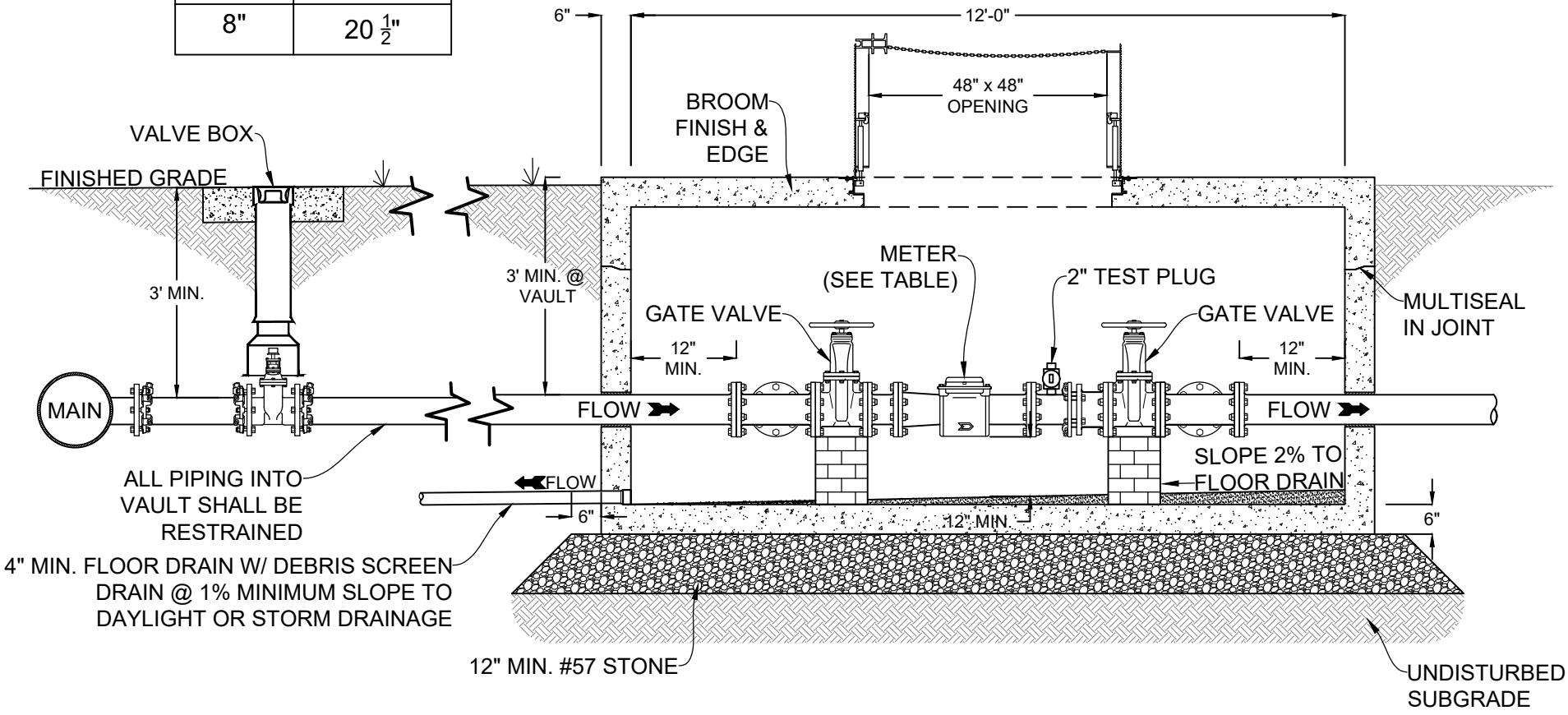


## SECTION VIEW

| TOWN OF APEX STANDARDS | 3" & LARGER METER INSTALLATION & VAULT | STD. NO. 600.03 |
|---|---|---|
| EFFECTIVE: MARCH 23, 2021 | | SHEET 1 OF 2 |

NOTES:
1. DRILL 1/4" WEEP HOLE FOR STACK DRAINAGE INTO STONE.
2. DOUBLE 3/4" BRIDLE RODS ON BOTH SIDES.
3. A RIP-RAP SWALE FROM FROM CONCRETE SPLASH PAD TO POSITIVE DRAINAGE AREA IS REQUIRED.
4. BOTTOM 90 ELBOW SHALL HAVE BLIND FLANGE ATTACHED WITH TWO BOLTS.
5. INSTALL WATER MAIN MARKER AT R/W OR P/L TO LOCATE MAIN.
6. 3/4" RODS AND BOLTS TO BE HOT DIPPED GALVANIZED.

STAINLESS STEEL ROD REQUIREMENTS

| BRANCH SIZE | No. OF RODS |
|---|---|
| 6" | 2 |
| 8" | 4 |
| 12" | 6 |
| 16" | 8 |

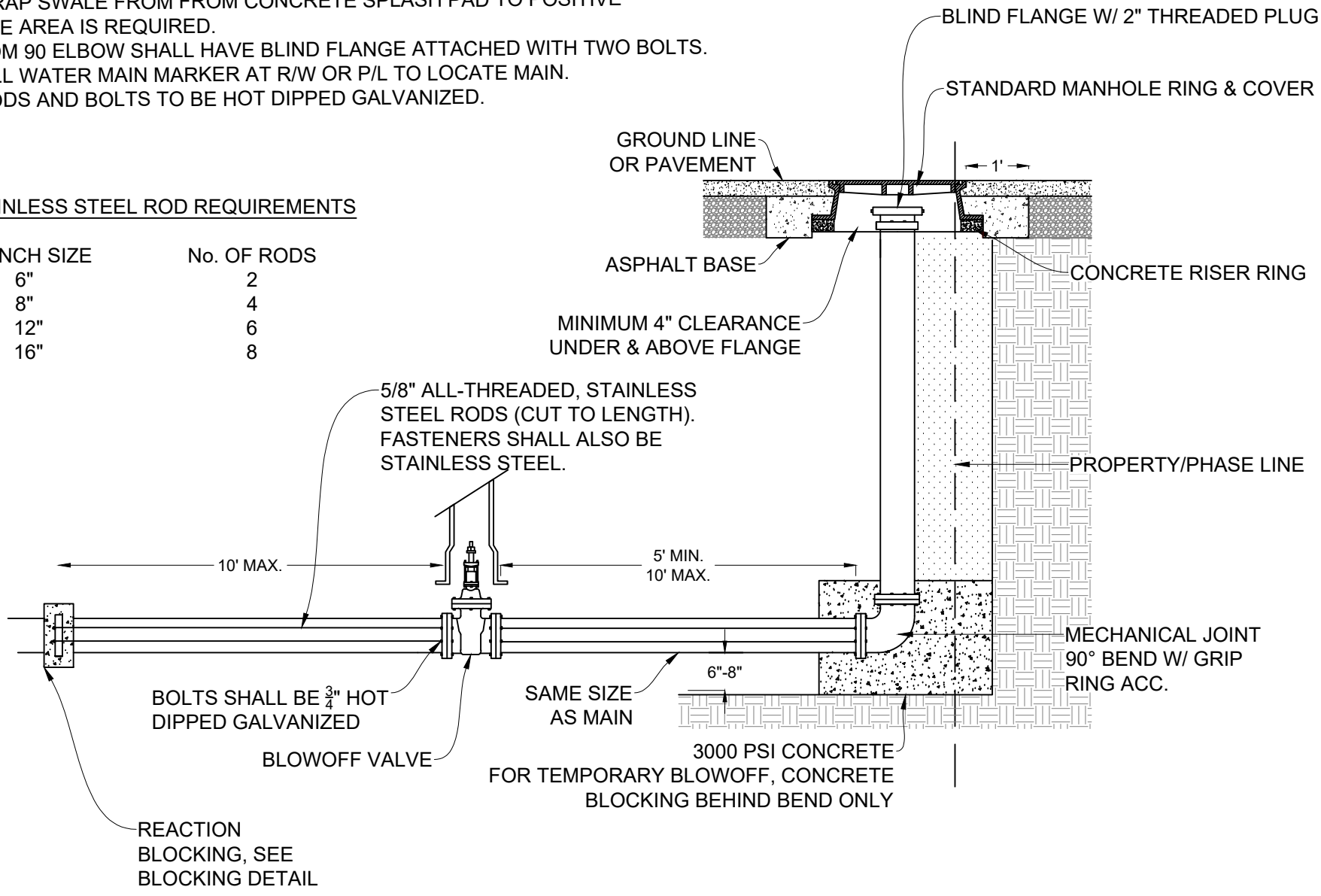


| TOWN OF APEX STANDARDS | BLOW OFF ASSEMBLY | STD. NO. |
|---|---|---|
| EFFECTIVE: MARCH 23, 2021 | - Page 331 - | 600.04 |
| | | SHEET 1 OF 1 |

NOTES:

1. HYDRANT TO BE PLACED WITH PUMPER NOZZLE FACING THE CLOSEST CURB.
2. HYDRANT TO BE PAINTED ONE COAT OF RED AFTER INSTALLATION.
3. WATER SERVICES SHALL NOT BE PERMITTED ON HYDRANT LEGS.
4. THERE SHALL BE A 10 FOOT EASEMENT ON ALL SIDES OF THE HYDRANT, CLEAR OF ANY OBSTRUCTIONS.
5. HYDRANTS SHALL BE SPACED IN ACCORDANCE WITH THE STANDARD SPECIFICATIONS SECTION 600.

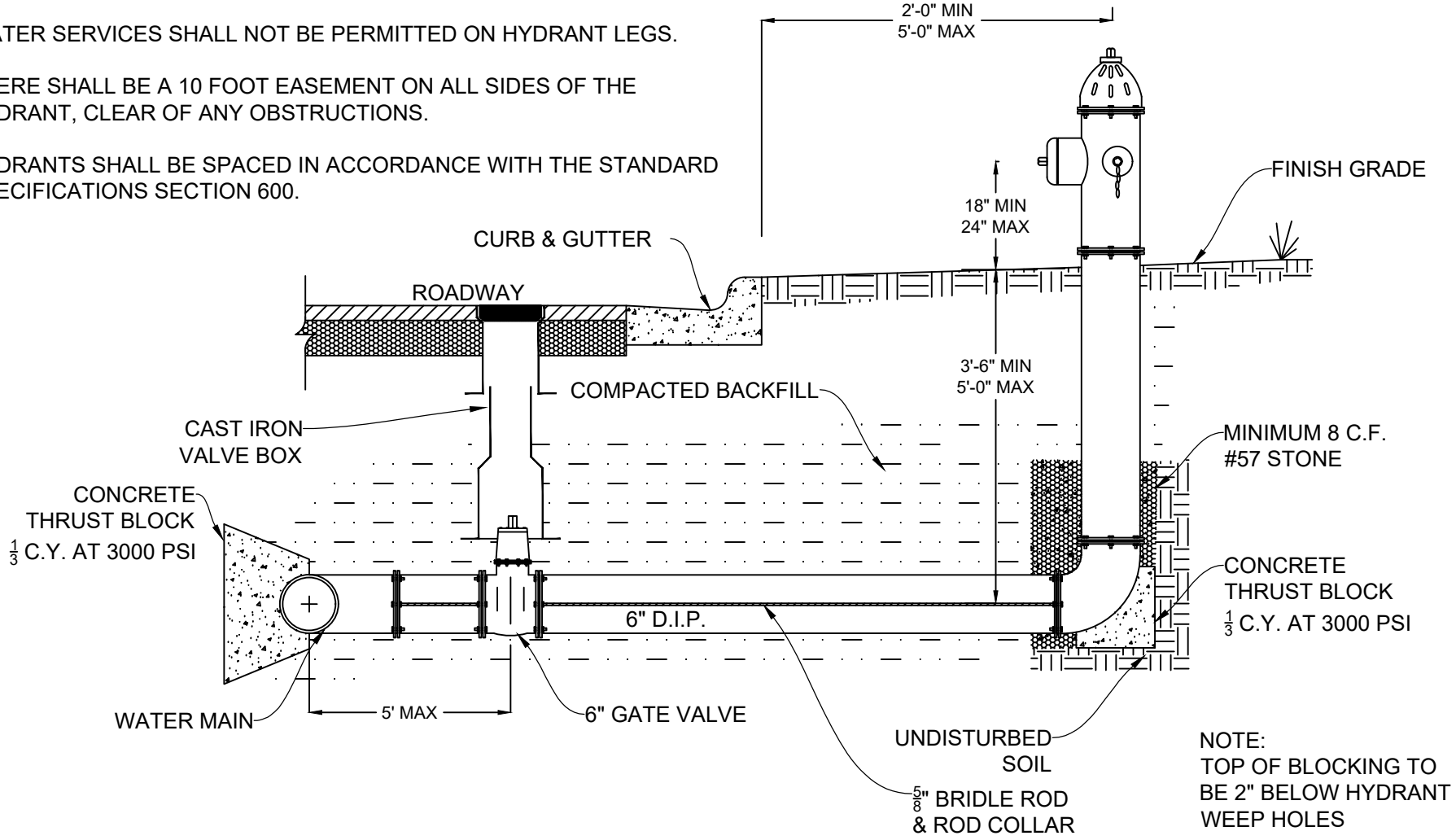


| TOWN OF APEX STANDARDS | HYDRANT INSTALLATION | STD. NO. |
|---|---|---|
| EFFECTIVE: MARCH 23, 2021 | - Page 332 - | 600.05 |
| | | SHEET 1 OF 1 |

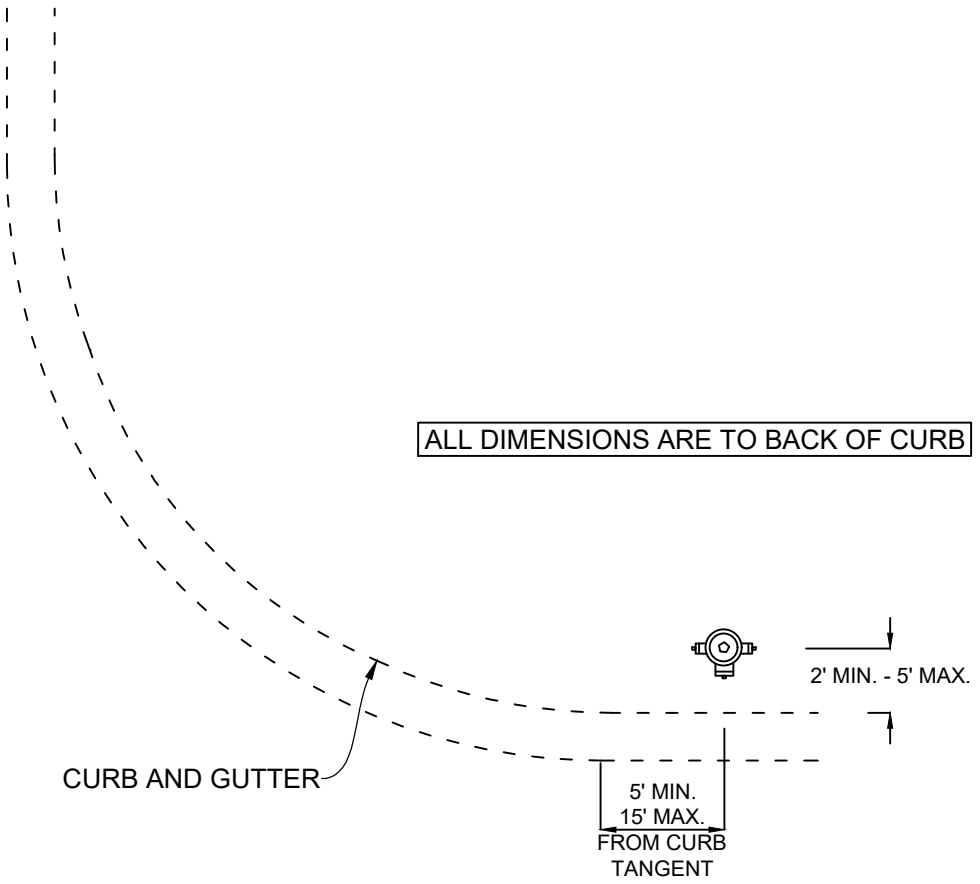


NOTES:

1. HYDRANTS SHALL BE SPACED IN ACCORDANCE WITH THE STANDARD SPECIFICATIONS SECTION 600.

| TOWN OF APEX STANDARDS | HYDRANT LOCATION | STD. NO. |
|---|---|---|
| EFFECTIVE: MARCH 23, 2021 | | 600.06 |
| | | SHEET 1 OF 1 |

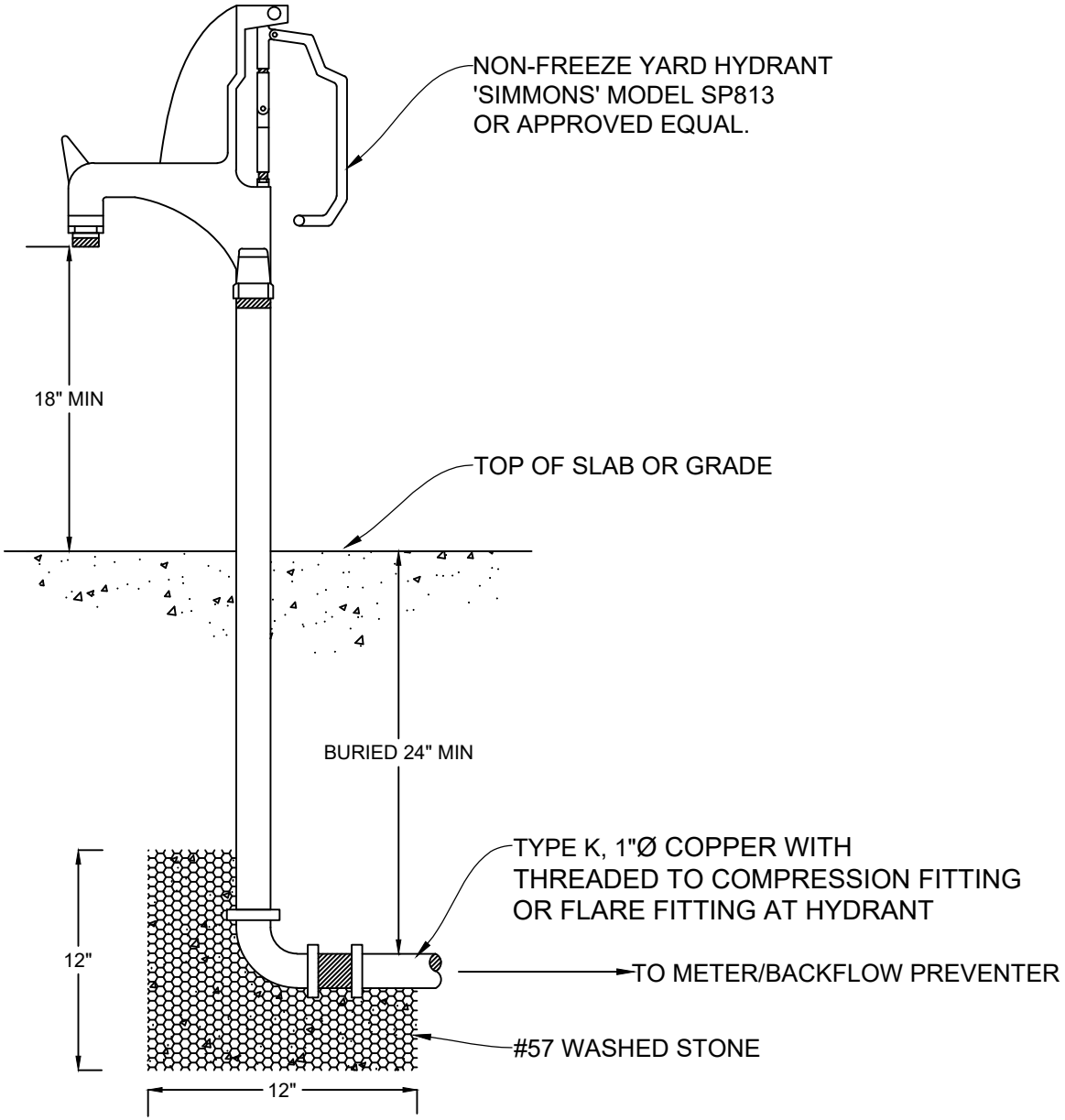


| TOWN OF APEX STANDARDS | YARD HYDRANT (NON-FREEZE) | STD. NO. |
|---|---|---|
| EFFECTIVE: MARCH 23, 2021 | | 600.07 |
| | | SHEET 1 OF 1 |

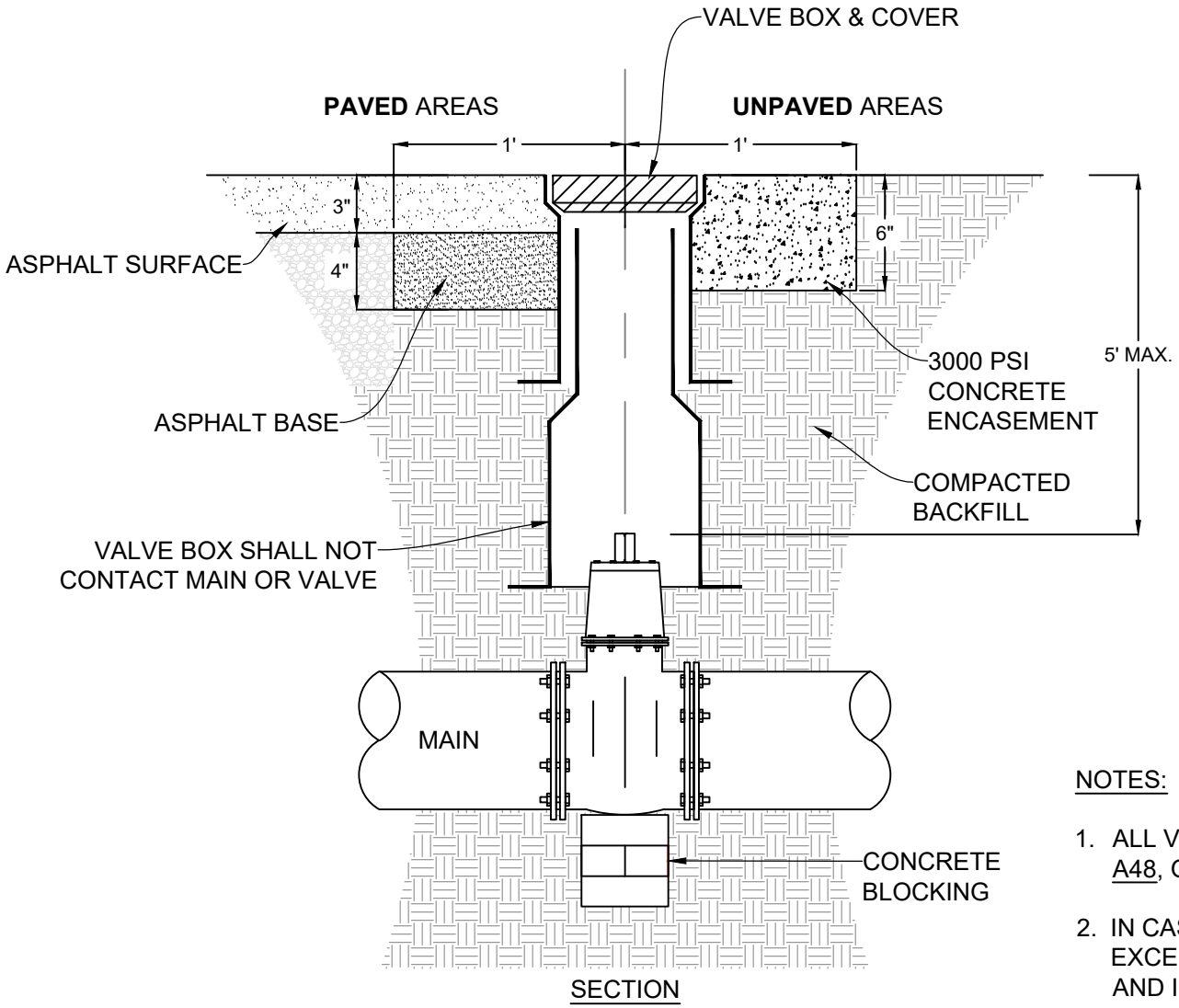


SECTION

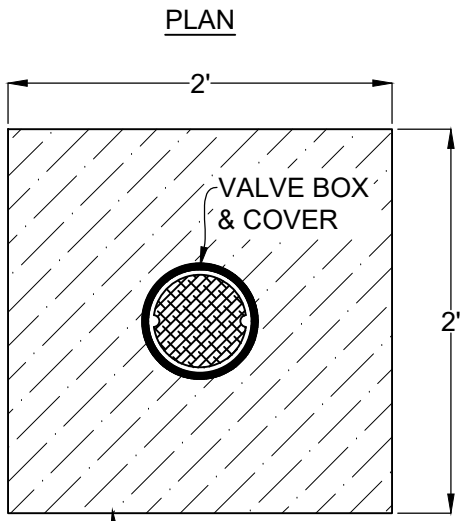


NOTES:

1. ALL VALVE BOXES AND COVERS SHALL MEET ASTM A48, GRADE 35B IRON REQUIREMENTS.
2. IN CASES WHERE MAX. VALVE BOX HEIGHT IS EXCEEDED, USE 6" DIP AS A PROTECTIVE SLEEVE AND INCLUDE A VALVE NUT EXTENSION.
3. IF THE VALVE OPERATING NUT IS GREATER THAN 6 FEET FROM THE SURFACE AN EXTENSION KIT FROM THE VALVE MANUFACTURER MUST BE PROVIDED.

| TOWN OF APEX STANDARDS | VALVE BOX INSTALLATION | STD. NO. |
|---|---|---|
| EFFECTIVE: MARCH 23, 2021 | | 600.08 |
| | | SHEET 1 OF 1 |

NOTES:

1. TAP SIZE AND ISOLATION VALVE TO BE SAME SIZE AS AIR VALVE.
2. ALL PIPING AND FITTINGS IN THE MANHOLE SHALL BE BRASS OR BRONZE UNLESS NOTED OTHERWISE.
3. MANHOLE STEPS SHALL BE PLACED 16" O.C. WHEN DEPTH OF MANHOLE EXCEEDS 4 FEET.
4. MANHOLE INTERIOR SHALL BE EPOXY COATED IN THE CASE OF SEWER.
5. WATER MAINS 16" AND LARGER OR IN OUTFALLS MAY REQUIRE 5 FOOT DIAMETER MANHOLES AND/OR FLAT TOP MANHOLES.

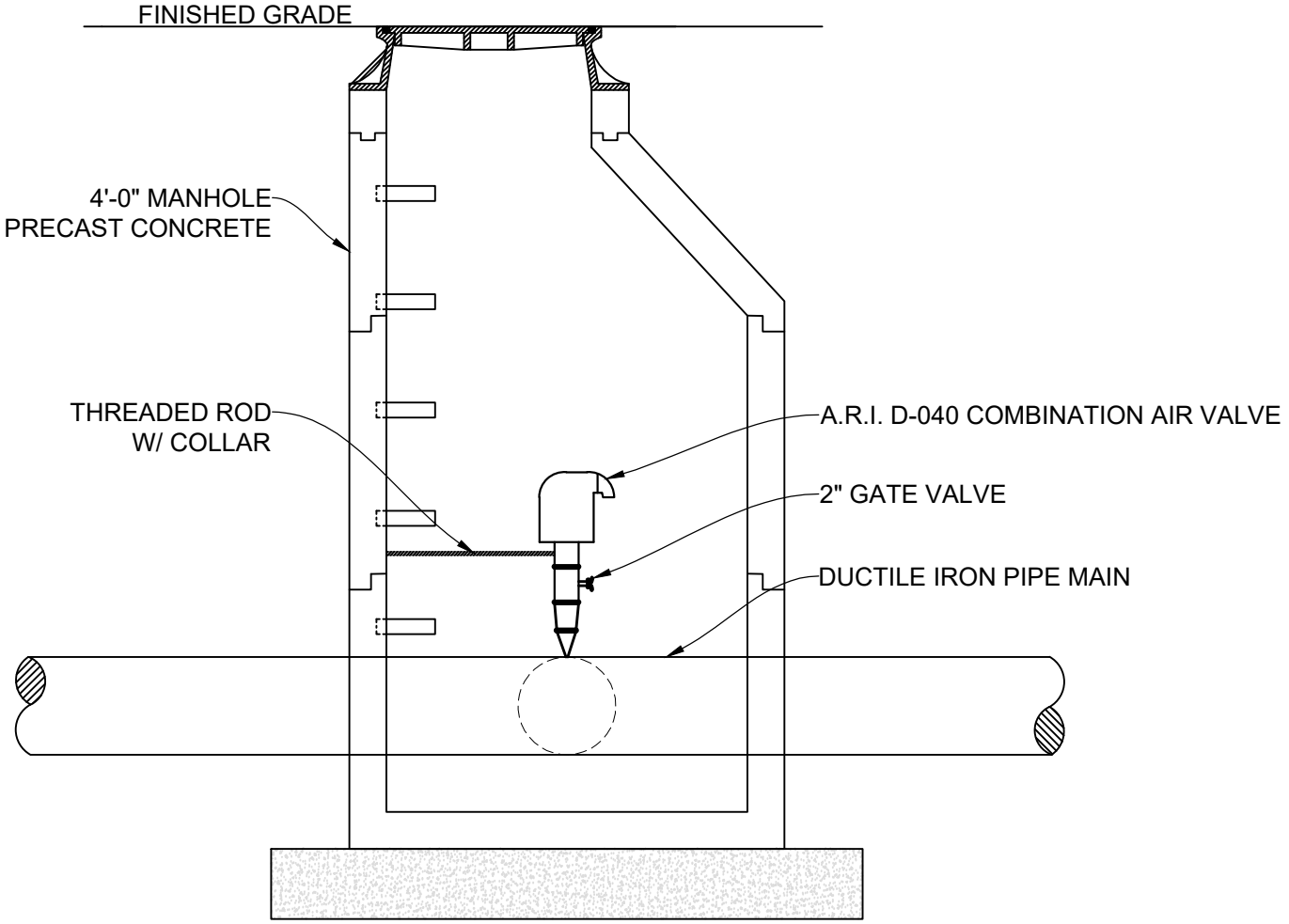


| TOWN OF APEX STANDARDS | AIR RELEASE MANHOLE FOR WATER MAINS | STD. NO. 600.12 |
|---|---|---|
| EFFECTIVE: MARCH 23, 2021 | | SHEET 1 OF 2 |

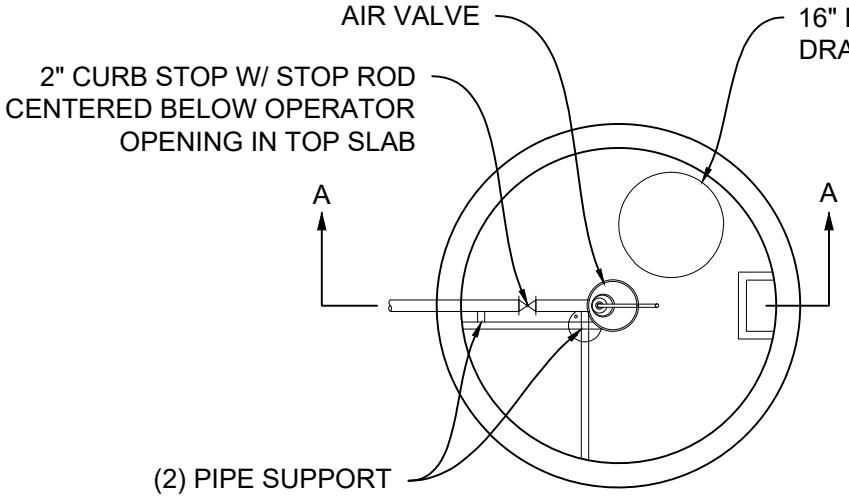


SECTION A-A

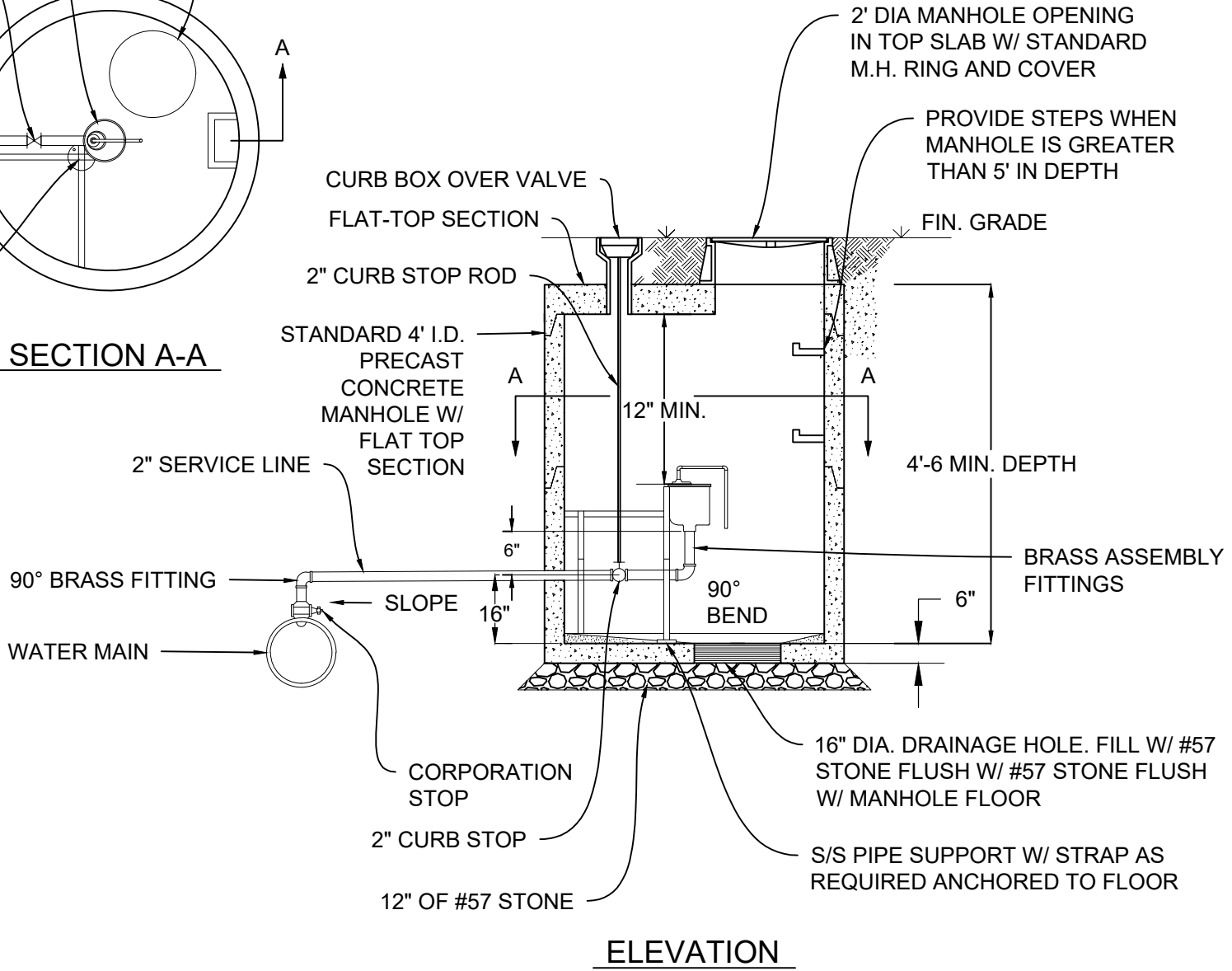


ELEVATION

| TOWN OF APEX STANDARDS | AIR RELEASE MANHOLE OFFSET FROM WATER MAIN | STD. NO. 600.12 |
|---|---|---|
| EFFECTIVE: MARCH 23, 2021 | | SHEET 2 OF 2 |

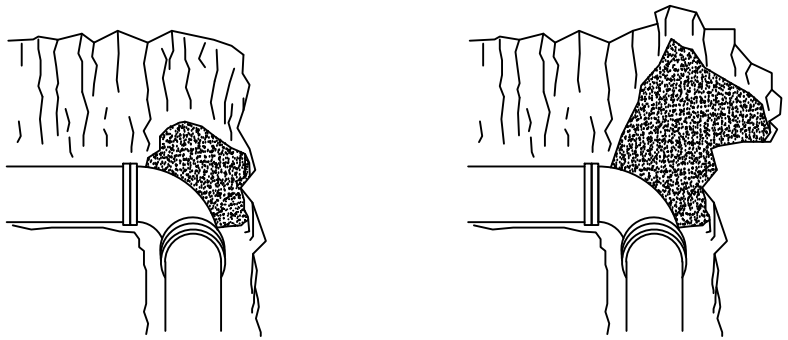

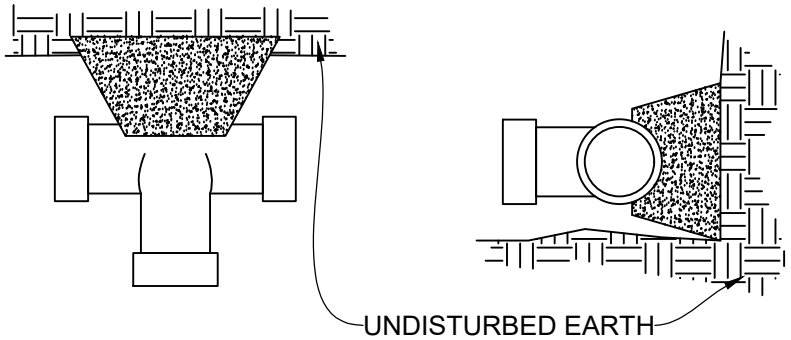


| MINIMUM CONCRETE BLOCKING (C.Y.)* | | | | | |
|---|---|---|---|---|---|
| NOM. PIPE DIA. (INCHES) | TEES & DEAD ENDS | 90° BEND | 45° BEND | 22-1/2° BEND | 11-1/4° BEND |
| 4 | 0.1 | 0.1 | 0.1 | 0.1 | 0.1 |
| 6 | 0.2 | 0.2 | 0.1 | 0.1 | 0.1 |
| 8 | 0.2 | 0.3 | 0.2 | 0.1 | 0.1 |
| 10 | 0.3 | 0.5 | 0.3 | 0.2 | 0.2 |
| 12 | 0.4 | 0.6 | 0.5 | 0.3 | 0.3 |
| 14 | 0.7 | 0.9 | 0.6 | 0.5 | 0.5 |
| 16 | 0.7 | 0.9 | 0.6 | 0.5 | 0.5 |
| 18 | 0.9 | 1.2 | 0.7 | 0.6 | 0.6 |
| 20 | 1.1 | 1.6 | 1.1 | 0.7 | 0.7 |
| 24 | 1.7 | 2.3 | 1.6 | 0.9 | 0.9 |

* CONCRETE SHALL BE 3000 PSI

NOTES:

1. WRAP FITTINGS IN 6 MIL PLASTIC BEFORE POURING CONCRETE. (NO CONCRETE SHALL COVER BOLTS OR GLANDS).
2. ALL BLOCKING SHALL BE PLACED SO THAT THE PIPE END FITTING JOINTS WILL BE ACCESSIBLE FOR REPAIRS.
3. REACTION BLOCKING SHALL BE TO SUFFICIENT SIZE TO PREVENT THE FITTING FROM BLOWING OFF THE MAIN A MAXIMUM TEST PRESSURE.
4. FITTINGS SHALL BE BLOCKED TO SOLID , UNDISTURBED EARTH WITH CONCRETE.

NOTES:

1. WITNESS POST TO BE INSTALLED UPRIGHT WITH THE CAST 'MV' FACING THE NEAREST STREET.
2. DIRECTION AND DISTANCE MUST BE ETCHED OR STAMPED INTO THE BRONZE INSERT.
3. ONE POST TO BE INSTALLED FOR EACH VALVE LOCATED OUTSIDE OF THE PAVEMENT.
4. WITNESS POST TO BE INSTALLED AT THE RIGHT OF WAY.
5. NO POST REQUIRED FOR FIRE HYDRANT ISOLATION VALVES.
6. PLASTIC MARKER POST SHALL BE ACCEPTABLE IN LIEU OF CONCRETE.

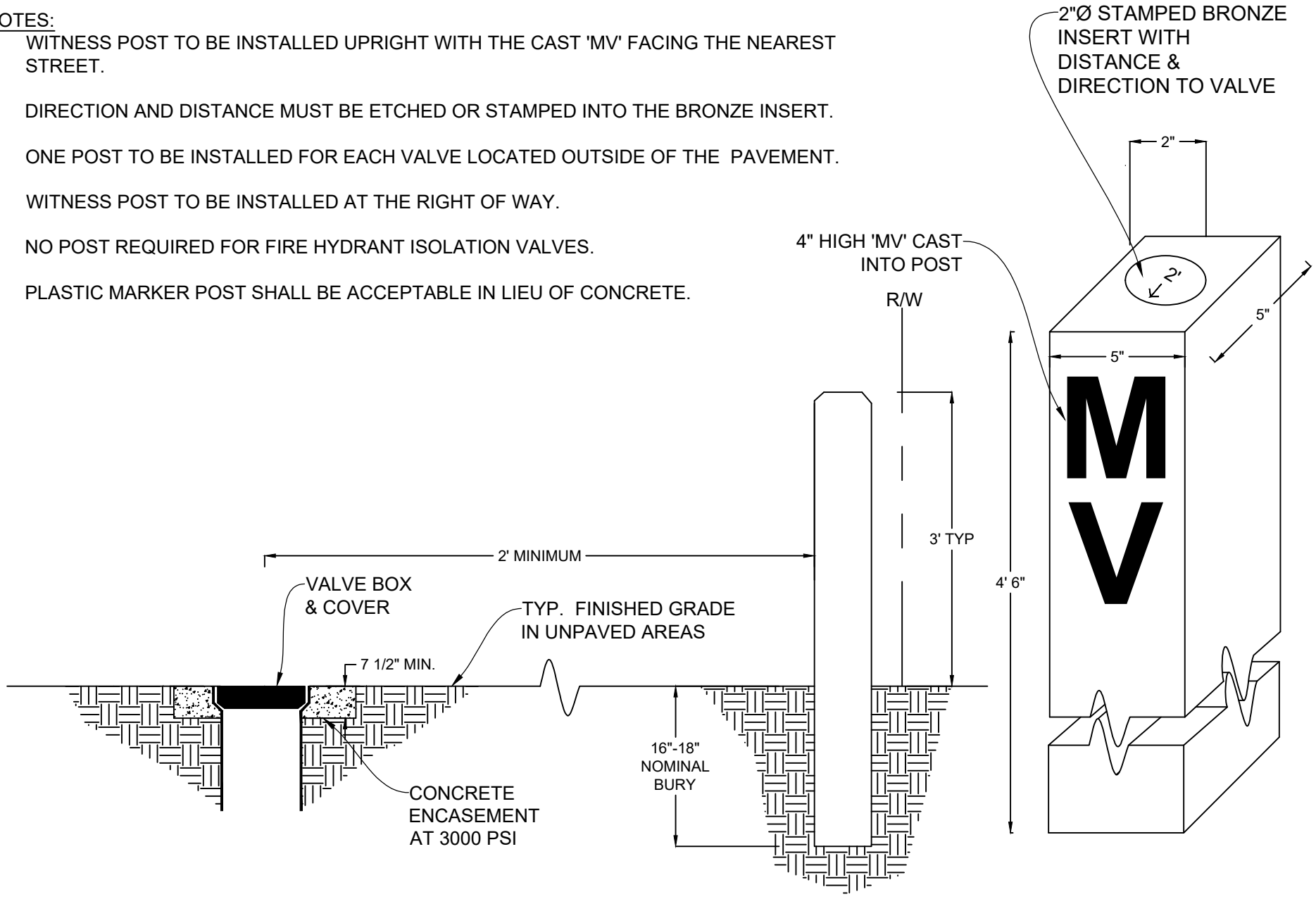


| TOWN OF APEX STANDARDS | VALVE BOX MARKER FOR UNPAVED AREAS | STD. NO. |
|---|---|---|
| EFFECTIVE: MARCH 23, 2021 | - Page 339 - | 600.15 |
| | | SHEET 1 OF 1 |

FIELD ADJUSTMENT INSTRUCTIONS:

1. REMOVE THE BODY FROM THE TOP OF THE INDICATOR POST ASSEMBLY.
2. CUT THE REQUIRED LENGTH OF THE BOTTOM OF THE STANDPIPE FOR THE GROUND LINE TO MATCH UP WITH THE STANDPIPE GROUND LINE MARK.
3. CUT THE 1" SQ. EXTENSION AT A DISTANCE OF 9" ABOVE THE TOP OF THE STANDPIPE.
4. SET THE "OPEN" AND "SHUT" TARGETS FOR THE APPROPRIATE VALVE SIZE.
5. REATTACH THE BODY TO THE TOP OF THE INDICATOR POST ASSEMBLY.
6. LOCATION OF VALVE PER NFPA.

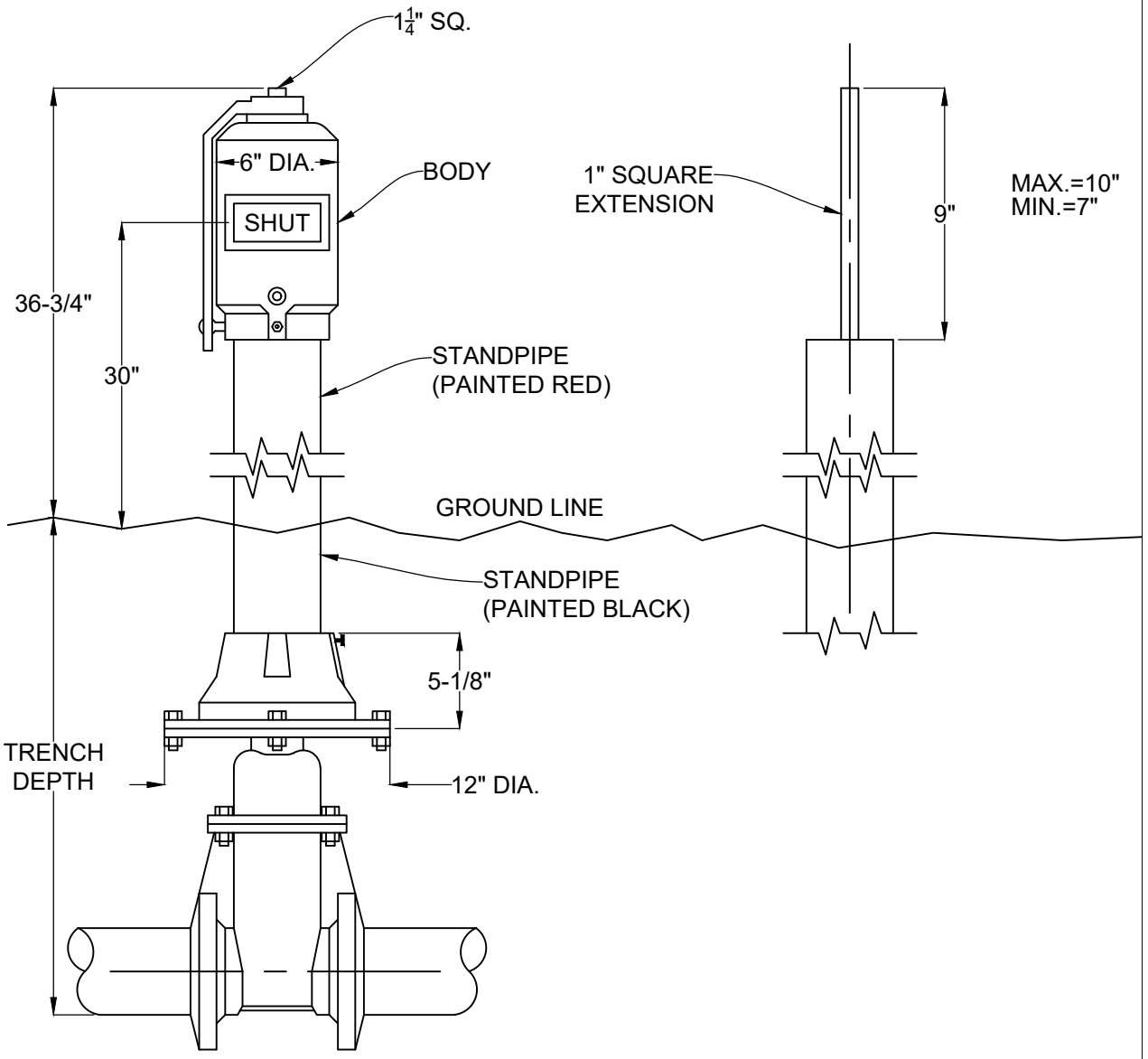


| TOWN OF APEX STANDARDS | POST INDICATOR VALVE | STD. NO. |
|---|---|---|
| EFFECTIVE: MARCH 23, 2021 | | 600.16 |
| | | SHEET 1 OF 1 |

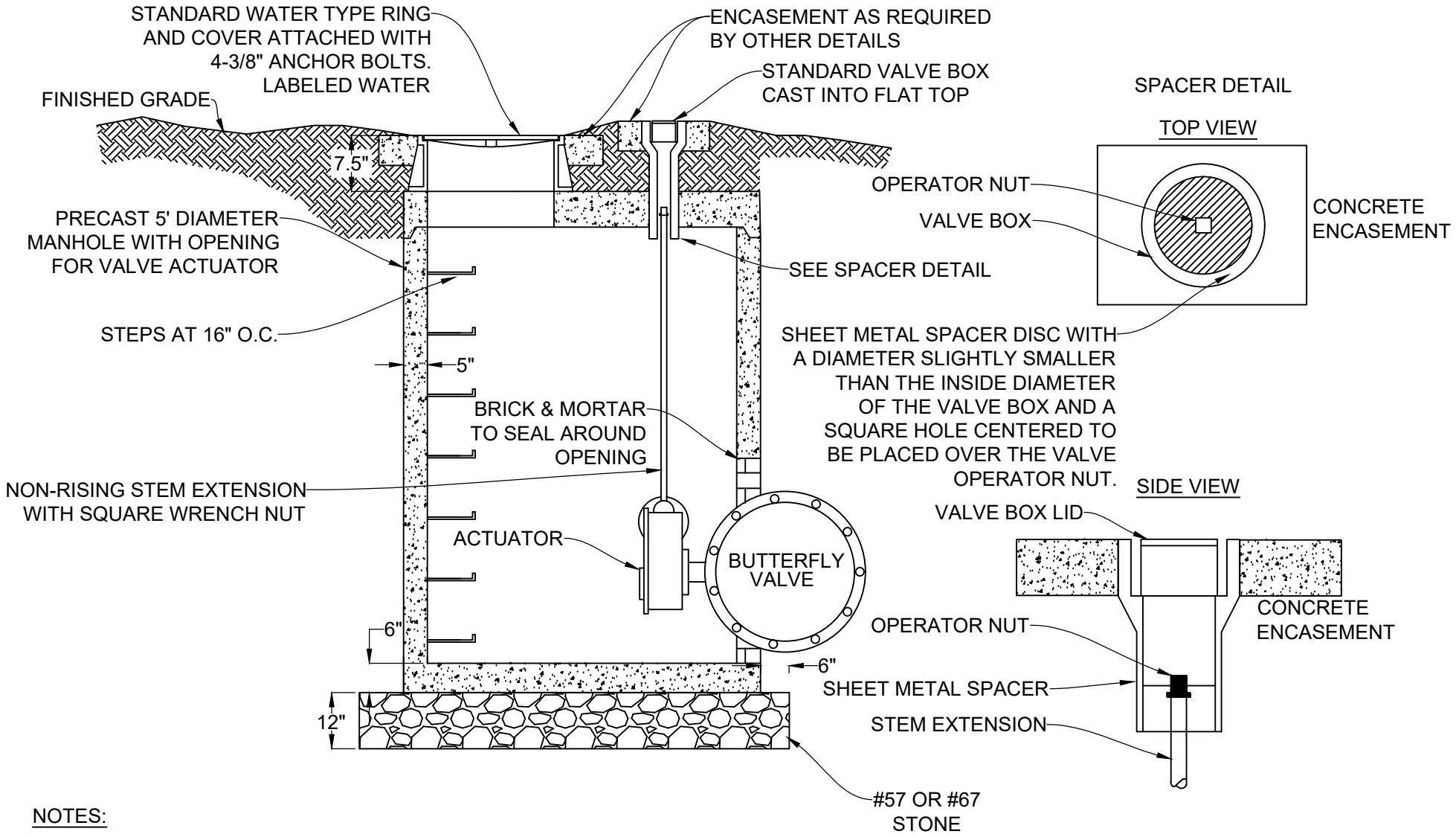


NOTES:

1. MANHOLE TO BE USED ON ALL VALVES 16" AND LARGER.
2. THIS CONFIGURATION TO BE USED ON ALL BUTTERFLY VALVES 16" AND LARGER.

| TOWN OF APEX STANDARDS | BUTTERFLY VALVE WITH 5' MANHOLE ENCASEMENT | STD. NO. 600.17 |
|---|---|---|
| EFFECTIVE: MARCH 23, 2021 | | SHEET 1 OF 1 |

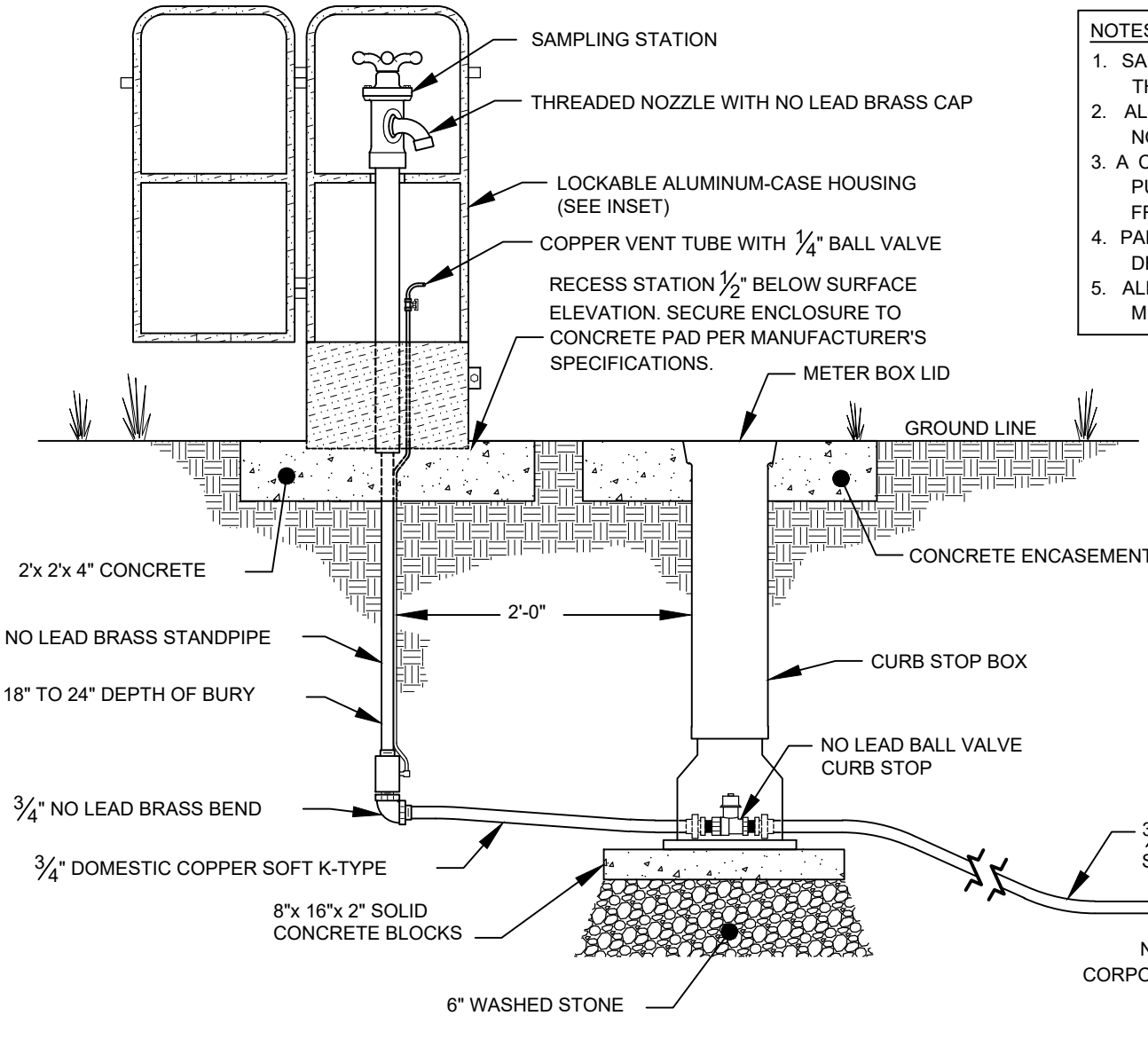


NOTES:

1. SAMPLING STATIONS SHALL BE 18"-24" BURY, WITH A 3/4 THREADED NOZZLE WITH 'NO LEAD' BRASS CAP.
2. ALL STATIONS SHALL BE ENCLOSED IN A LOCKABLE, NON-REMOVABLE, ALUMINUM-CAST HOUSING.
3. A COPPER VENT TUBE WILL ENABLE EACH STATION TO BE PUMPED FREE OF STANDING WATER TO PREVENT FREEZING AND TO MINIMIZE BACTERIA GROWTH.
4. PADLOCK PROVIDED BY TOWN OF APEX PUBLIC WORKS DEPARTMENT.
5. ALL BRASS COMPONENTS SHALL BE 'NO LEAD' BRASS MEETING UNS C89833 AS PER ASTM B584.

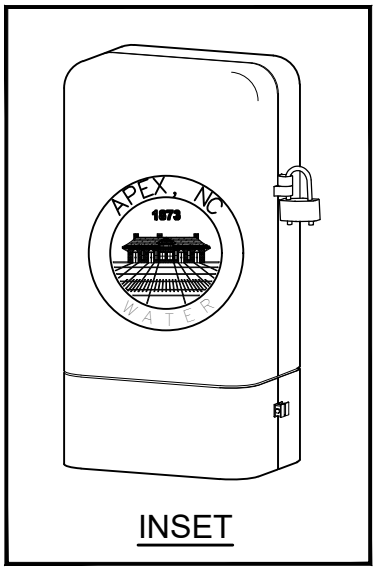


INSET

| TOWN OF APEX STANDARDS | SAMPLING STATION | STD. NO. |
|---|---|---|
| EFFECTIVE: MARCH 23, 2021 | | 600.18 |
| | | SHEET 1 OF 1 |

NOTES:

1. REFER TO BORE AND JACK DETAIL (450.06) FOR PIPE, CASING, SUPPORTS, AND OTHER DETAILS.
2. PRIOR APPROVAL FROM THE WATER RESOURCES DIRECTOR MUST BE OBTAINED FOR THIS METHOD OF CONNECTION.

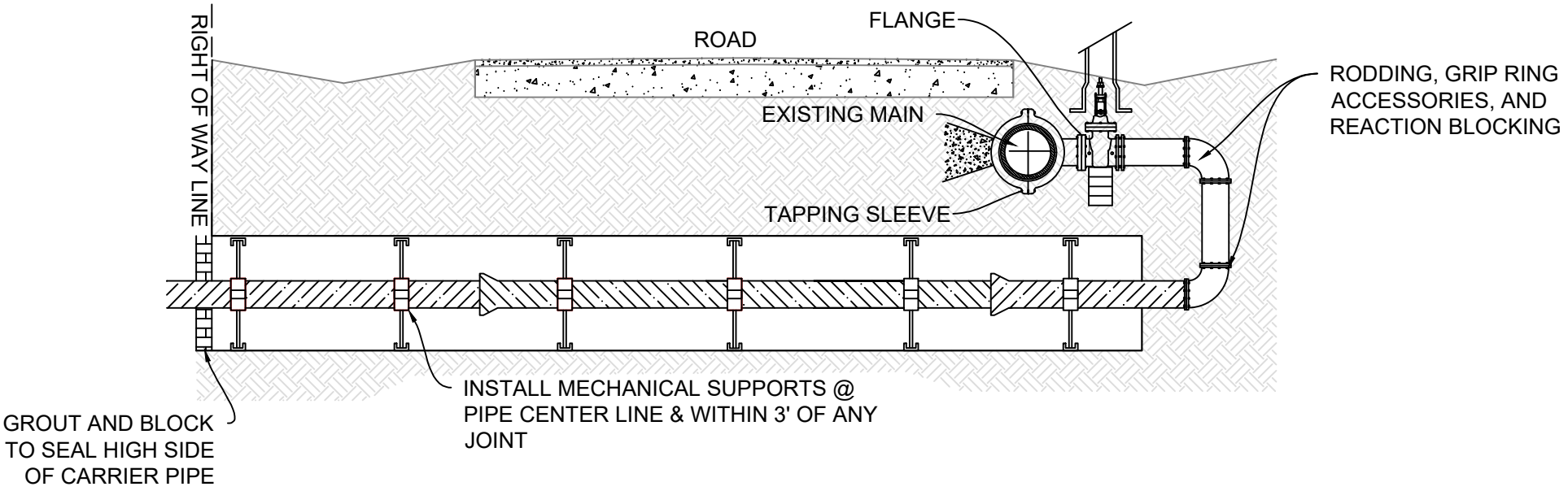


| TOWN OF APEX STANDARDS | REVERSE TAP | STD. NO. |
|---|---|---|
| EFFECTIVE: MARCH 23, 2021 | | 600.21 |
| | | SHEET 1 OF 1 |

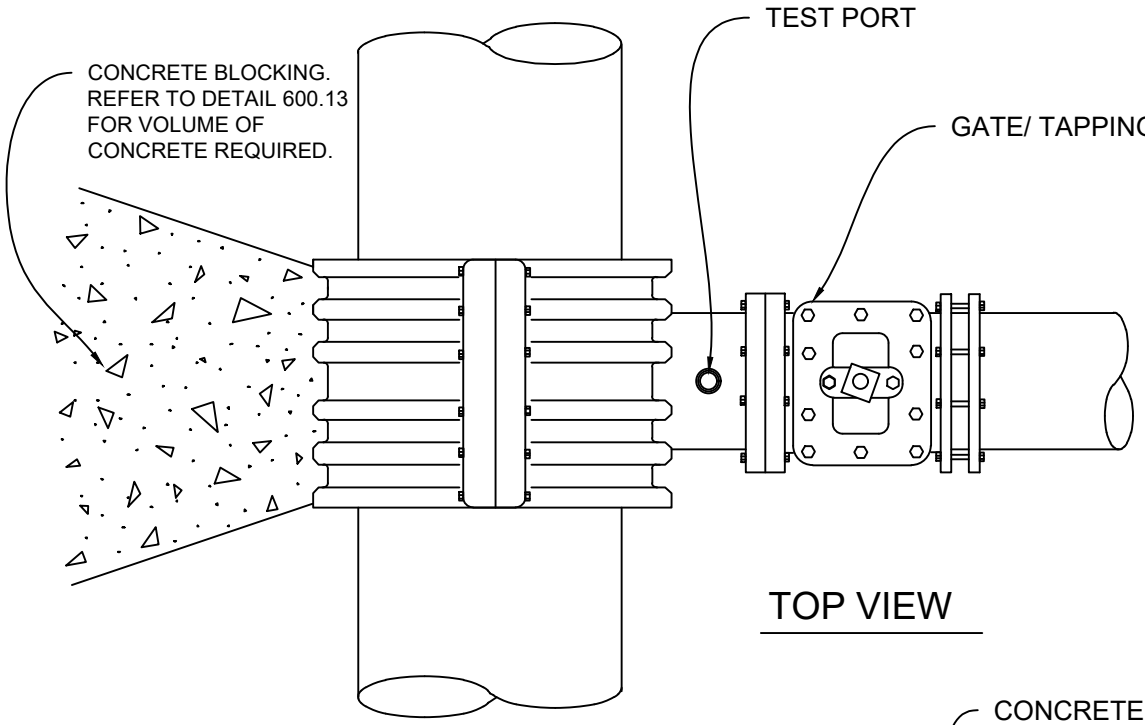


TOP VIEW

NOTES:

1. 3000 PSI SOLID CONCRETE SHALL BE USED AS FOOTING FOR DUCTILE IRON PIPE.
2. ALL FITTINGS SHALL BE COVERED WITH 10 MIL. POLYETHYLENE SHEETS PRIOR TO POURING CONCRETE BLOCKING.
3. PIPES SHALL BE SUPPORTED EITHER SIDE OF SADDLE LOCATION WITH CONCRETE ENCASEMENT PRIOR TO INSTALLING SLEEVE.

NOTES:

1. CONCRETE SHALL NOT CONTACT BOLTS OR ENDS OF MECHANICAL JOINT FITTINGS.
2. TEST PRESSURE SHALL NOT BE APPLIED FOR A MINIMUM OF 7 DAYS AFTER THRUST BLOCK PLACEMENT.
3. TAPPING SLEEVE & VALVE TO BE HYDROSTATICALLY TESTED AT 150 PSI FOR 15 MINUTES WITH ZERO PRESSURE LOSS.
4. TAPPING SLEEVES SHALL BE STAINLESS STEEL BODY, MECHANICAL JOINT, DESIGNED AND MANUFACTURED FOR A MINIMUM WORKING PRESSURE OF 250 PSI AND MEET AWWA STANDARDS.

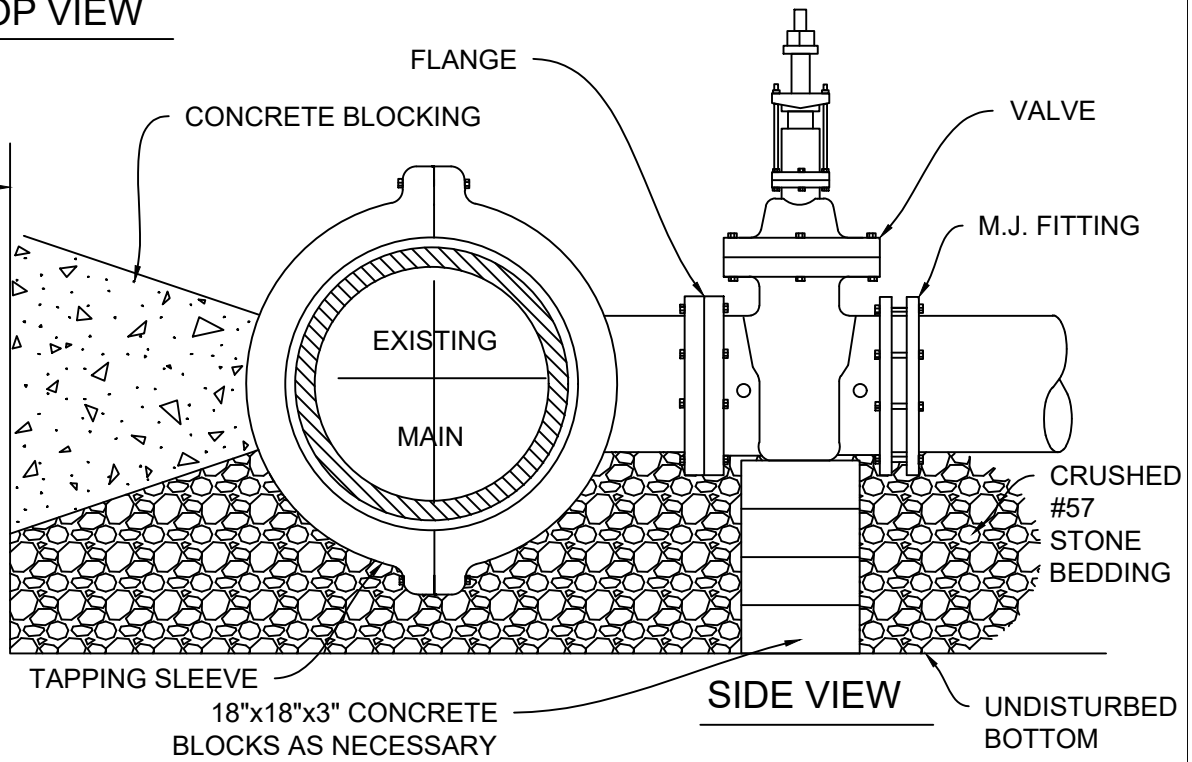


SIDE VIEW

| TOWN OF APEX STANDARDS | TAPPING SLEEVE AND VALVE | STD. NO. |
|---|---|---|
| EFFECTIVE: MARCH 23, 2021 | - Page 344 - | 600.22 |
| | | SHEET 1 OF 1 |

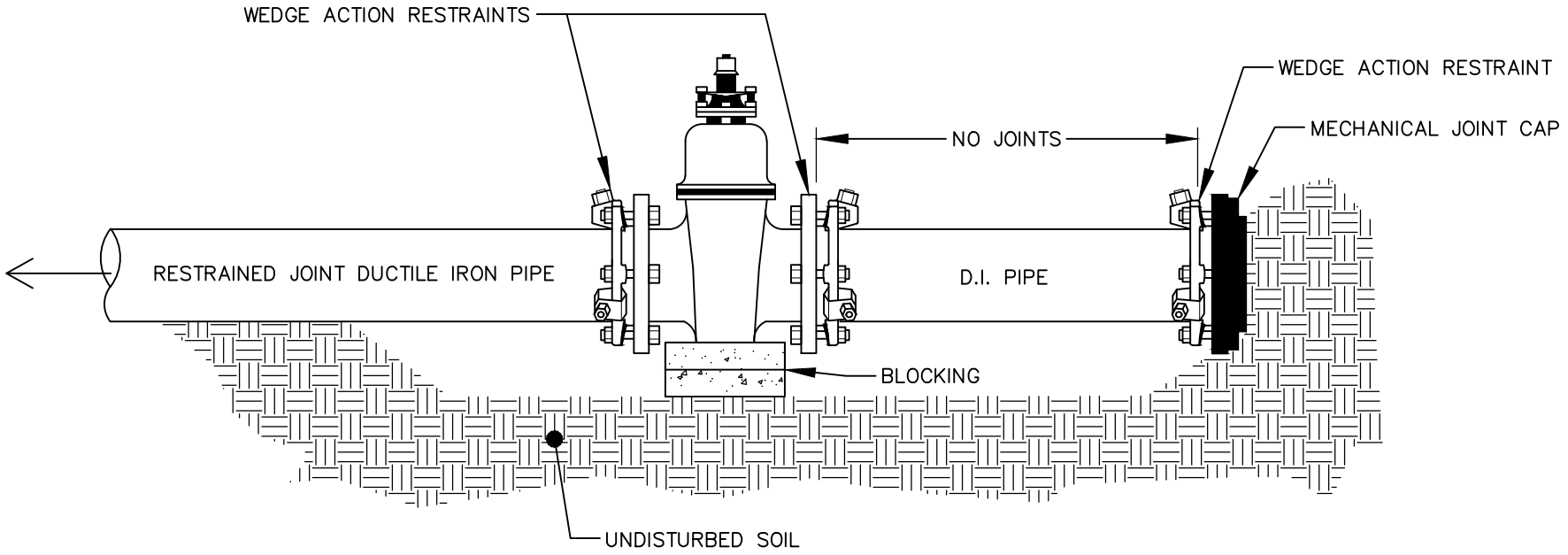


NOTES:
1. THIS DETAIL SHALL APPLY ONLY TO TEMPORARY CAPPING. PERMANENT DEAD END LINES TO BE IN ACCORDANCE WITH THE STANDARD BLOWOFF DETAIL.

2. REQUIRED RESTRAINT AWAY FROM THE DEAD END MAY BE MJ PIPE WITH WEDGE ACTION RESTRAINTS FOR PIPE ≤ 12 INCH DIAMETER.

| TOWN OF APEX STANDARDS | STANDARD STUBOUT/CAPPING DETAIL | STD. NO. |
|---|---|---|
| EFFECTIVE: MARCH 23, 2021 | | 600.23 |
| | | SHEET 1 OF 1 |

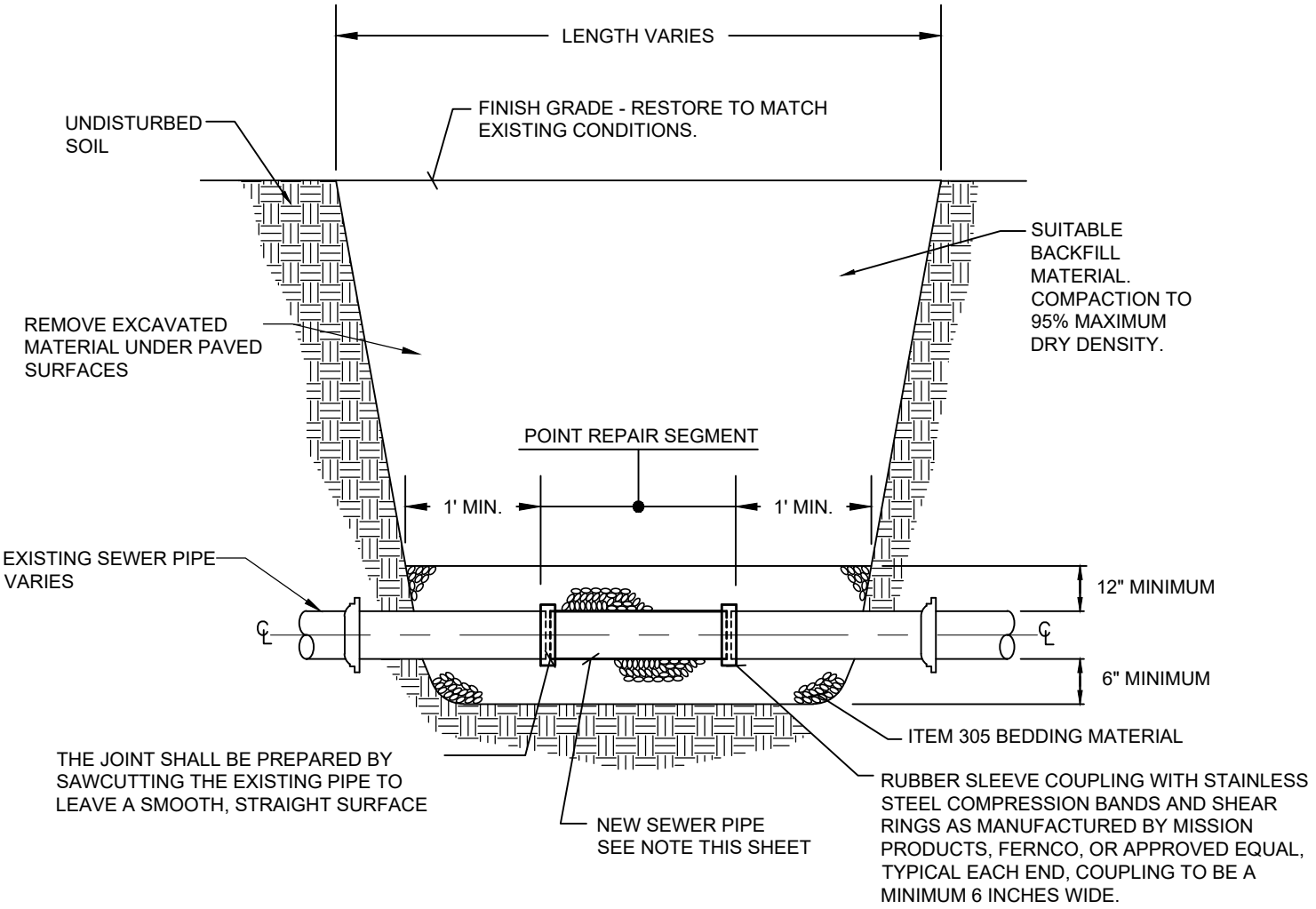


NOTE:
NEW SEWER PIPE LENGTH & TYPE TO BE DEFINED BY ENGINEER.

| TOWN OF APEX STANDARDS | STANDARD TYPICAL SEWER POINT REPAIR | STD. NO. |
|---|---|---|
| EFFECTIVE: MARCH 23, 2021 | | 700.01 |
| | | SHEET 1 OF 1 |

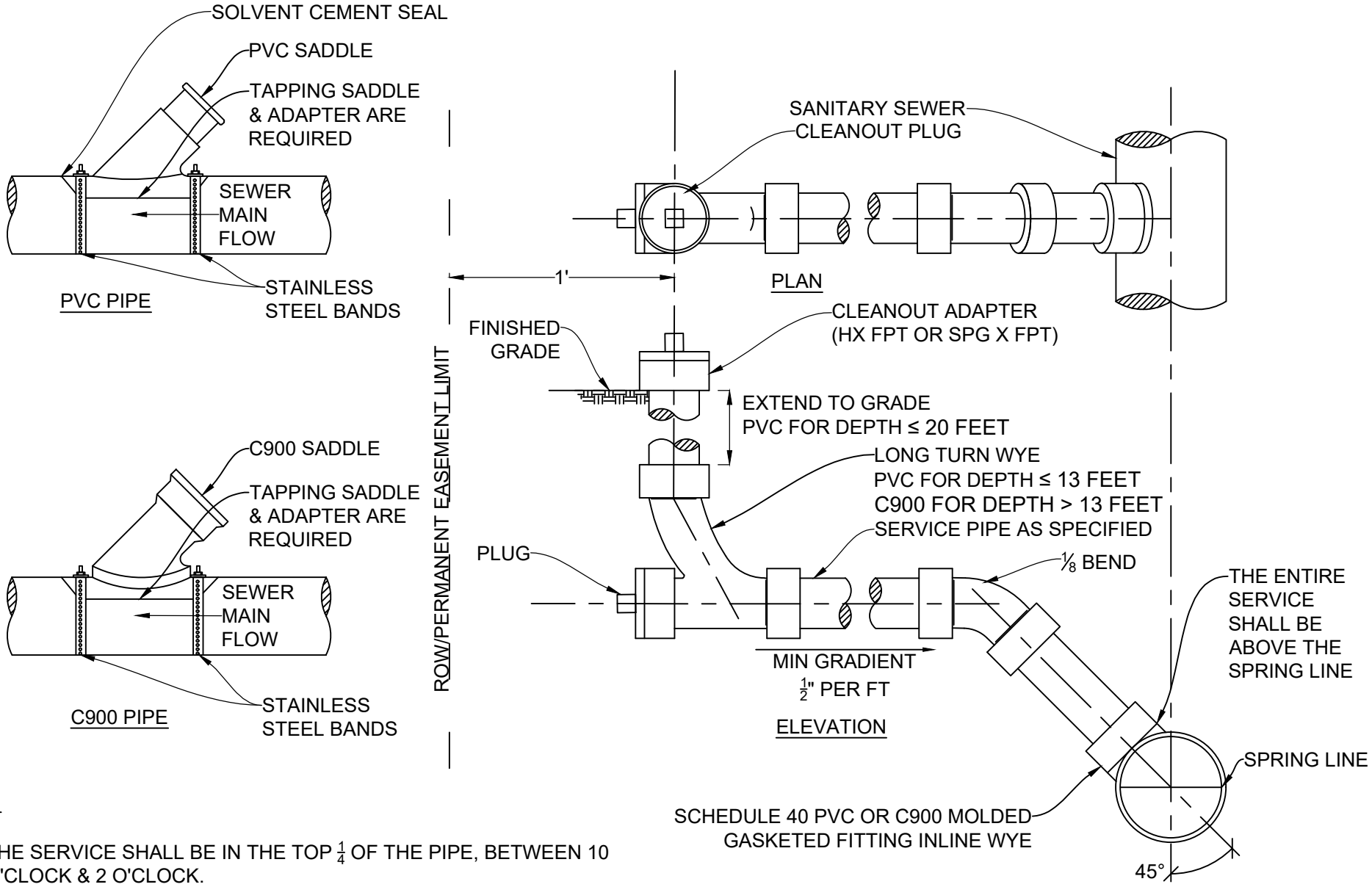


NOTES:

1. THE SERVICE SHALL BE IN THE TOP $\frac{1}{4}$ OF THE PIPE, BETWEEN 10 O'CLOCK & 2 O'CLOCK.
2. ONE ADDITIONAL 22.5 DEGREE FITTING MAY BE UTILIZED TO INSTALL THE SERVICE PERPENDICULAR TO THE MAIN.

| TOWN OF APEX STANDARDS | SANITARY SEWER SERVICE CONNECTIONS | STD. NO. |
|---|---|---|
| EFFECTIVE: MARCH 23, 2021 | - Page 347 - | 700.03 |
| | | SHEET 1 OF 1 |

NOTES:

1. FOR DEAD-END MANHOLES, THE INVERT SHALL BE EXTENDED THROUGH THE MANHOLE.
2. ON THE INTERIOR OF THE MANHOLE, ALL JOINTS BETWEEN SECTIONS SHALL BE PARGED WITH NON-SHRINK GROUT.
3. ON THE INTERIOR OF ALL MANHOLES, ALL JOINTS BETWEEN SECTIONS SHALL BE PARGED WITH PRECO-PLUG QUICK SETTING GROUT.
4. ON THE EXTERIOR OF ALL MANHOLES, ALL JOINTS BETWEEN SECTIONS SHALL BE CONTINUOUSLY WRAPPED WITH 12" WIDE WATERPROOF BITUMINOUS TAPE.
5. SEWER MANHOLES WITHIN 1200 FEET OF FORCE MAIN CONNECTION SHALL HAVE INTERIOR EPOXY COATED.

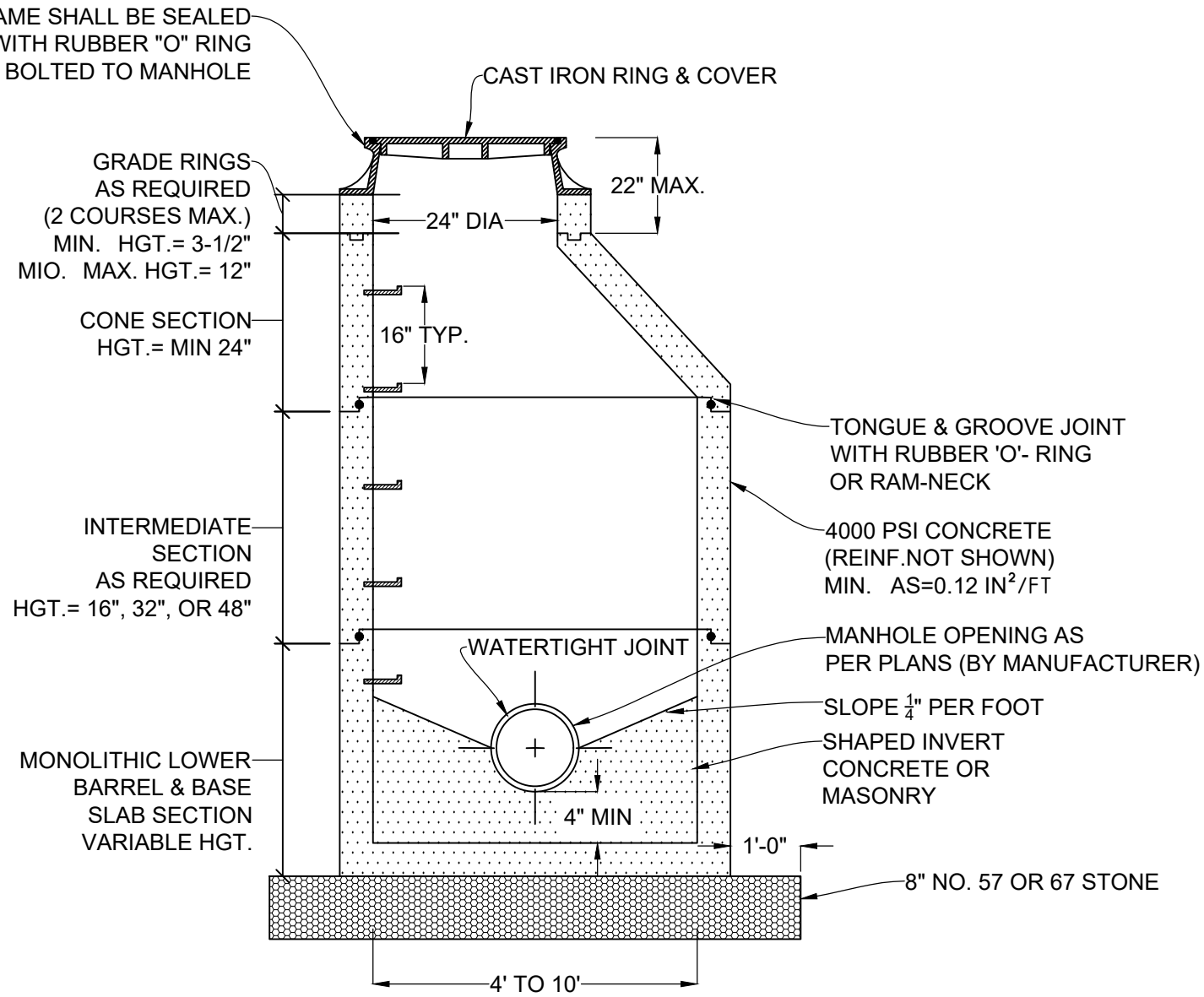


| TOWN OF APEX STANDARDS | PRECAST MANHOLE T C RATED | STD. NO. 700.04 |
|---|---|---|
| EFFECTIVE: MARCH 23, 2021 | | SHEET 1 OF 3 |

NOTES:

1. FOR DEAD-END MANHOLES, THE INVERT SHALL BE EXTENDED THROUGH THE MANHOLE.
2. ON THE INTERIOR OF THE MANHOLE, ALL JOINTS BETWEEN SECTIONS SHALL BE PARGED WITH NON-SHRINK GROUT.
3. ON THE INTERIOR OF ALL MANHOLES, ALL JOINTS BETWEEN SECTIONS SHALL BE PARGED WITH PRECO-PLUG QUICK SETTING GROUT.
4. ON THE EXTERIOR OF ALL MANHOLES, ALL JOINTS BETWEEN SECTIONS SHALL BE CONTINUOUSLY WRAPPED WITH 12" WIDE WATERPROOF BITUMINOUS TAPE.
5. SEWER MANHOLES WITHIN 1200 FEET OF FORCE MAIN CONNECTION SHALL HAVE INTERIOR EPOXY COATED.
6. SWING LIDS ONLY ALLOWED ON MANHOLES ELEVATED GREATER THAN 24"OR WATERTIGHT INSTALLATIONS.

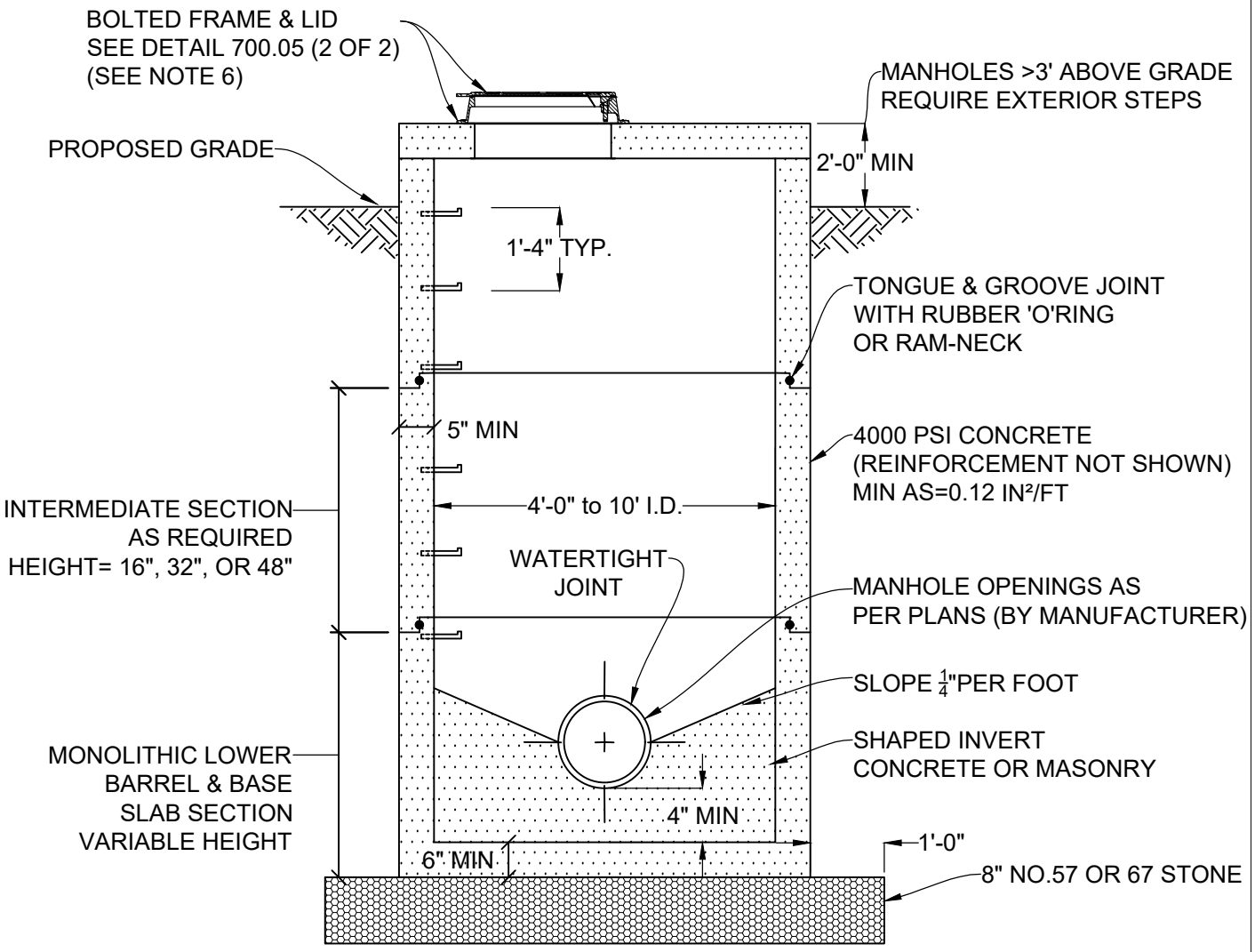


| TOWN OF APEX STANDARDS | PRECAST MANHOLE (OUTFALLS) | STD. NO. 700.04 |
|---|---|---|
| EFFECTIVE: MARCH 23, 2021 | | SHEET 2 OF 3 |

NOTES:

1. FOR DEAD-END MANHOLES, THE INVERT SHALL BE EXTENDED THROUGH THE MANHOLE.
2. ON THE INTERIOR OF THE MANHOLE, ALL JOINTS BETWEEN SECTIONS SHALL BE PARGED WITH NON-SHRINK GROUT.
3. ON THE INTERIOR OF ALL OUTFALL MANHOLES, ALL JOINTS BETWEEN SECTIONS SHALL BE PARGED WITH PRECO-PLUG QUICK SETTING GROUT.
4. ON THE EXTERIOR OF ALL MANHOLES, ALL JOINTS BETWEEN SECTIONS SHALL BE CONTINUOUSLY WRAPPED WITH 12" WIDE WATERPROOF BITUMINOUS TAPE.
5. SEWER MANHOLES WITHIN 1200 FEET OF FORCE MAIN CONNECTION SHALL HAVE INTERIOR EPOXY COATED.

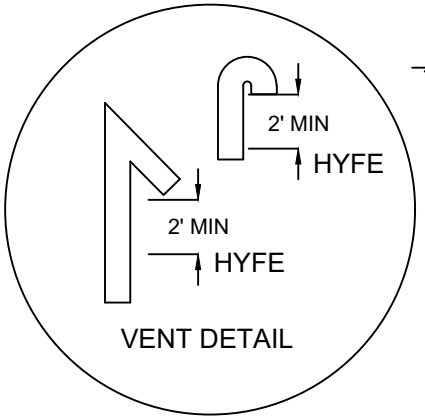


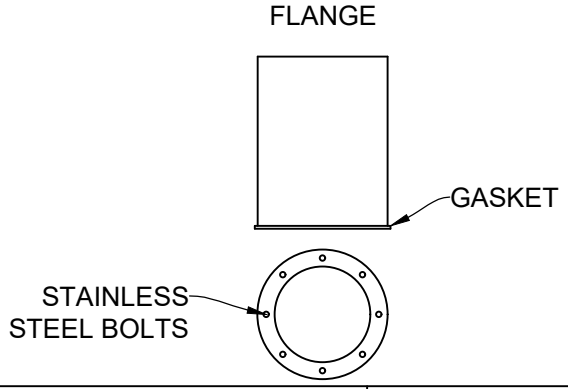





| TOWN OF APEX STANDARDS | PRECAST MANHOLE | STD. NO. |
|---|---|---|
| EFFECTIVE: MARCH 23, 2021 | - Page 350 - | 700.04 |
| | | SHEET 3 OF 3 |

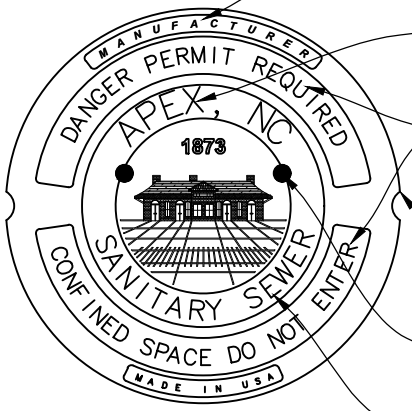


NAME OF MANUFACTURER

$1\frac{1}{4}$" LETTERING RECESSED

$\frac{3}{4}$" LETTERING RECESSED

(2) OPEN PICKHOLES

(2) 1" DIA. VENT HOLES

1" LETTERING RECESSED

NAME OF MANUFACTORER

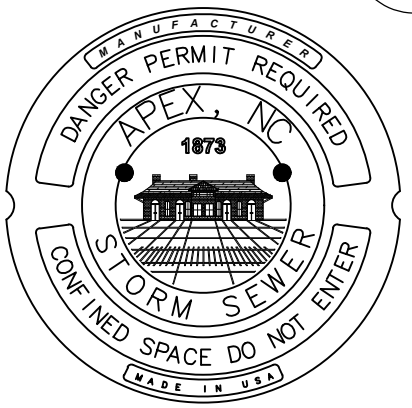


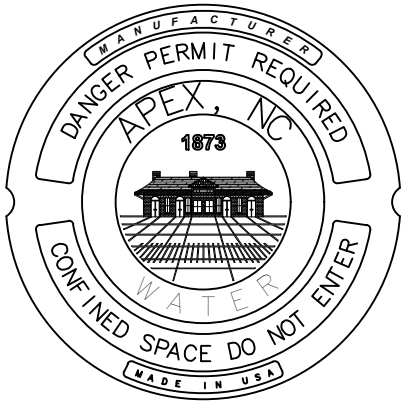


BOTTOM VIEW

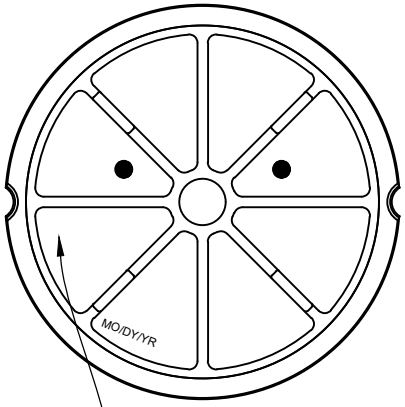


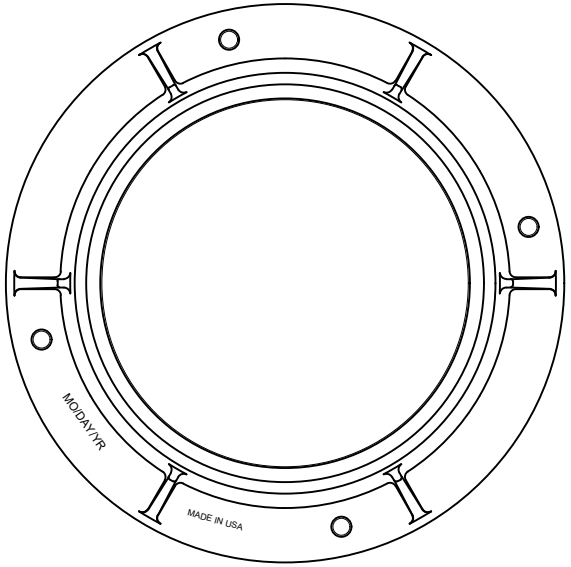


COVER SECTION

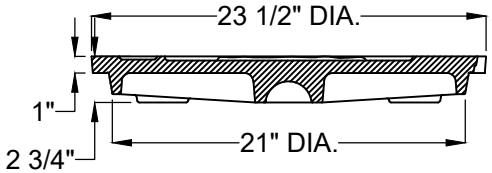


FRAME SECTION

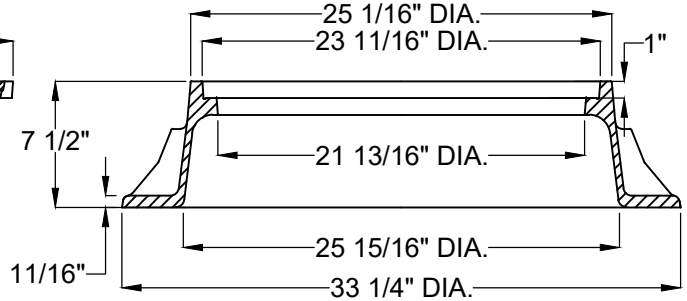


THE FOLLOWING MANHOLE COVERS **SHALL HAVE** VENT HOLES:

- SANITARY SEWER
- STORM SEWER

THE FOLLOWING MANHOLE COVERS SHALL **NOT** HAVE VENT HOLES:

- WATER VALVES
- WATER AIR-RELEASE VALVES
- FORCEMAIN AIR-RELEASE VALVES

| MIN. AVG. WT. | |
|---|---|
| FRAME | 150 LBS |
| COVER | 130 LBS |
| TOTAL | 280 LBS |

TOWN OF APEX STANDARDS

EFFECTIVE: MARCH 23, 2021

# MANHOLE RING & COVER (TYPE 1 - PA REAS, H-20 RATED)



STD. NO. 700.05

SHEET 1 OF 2

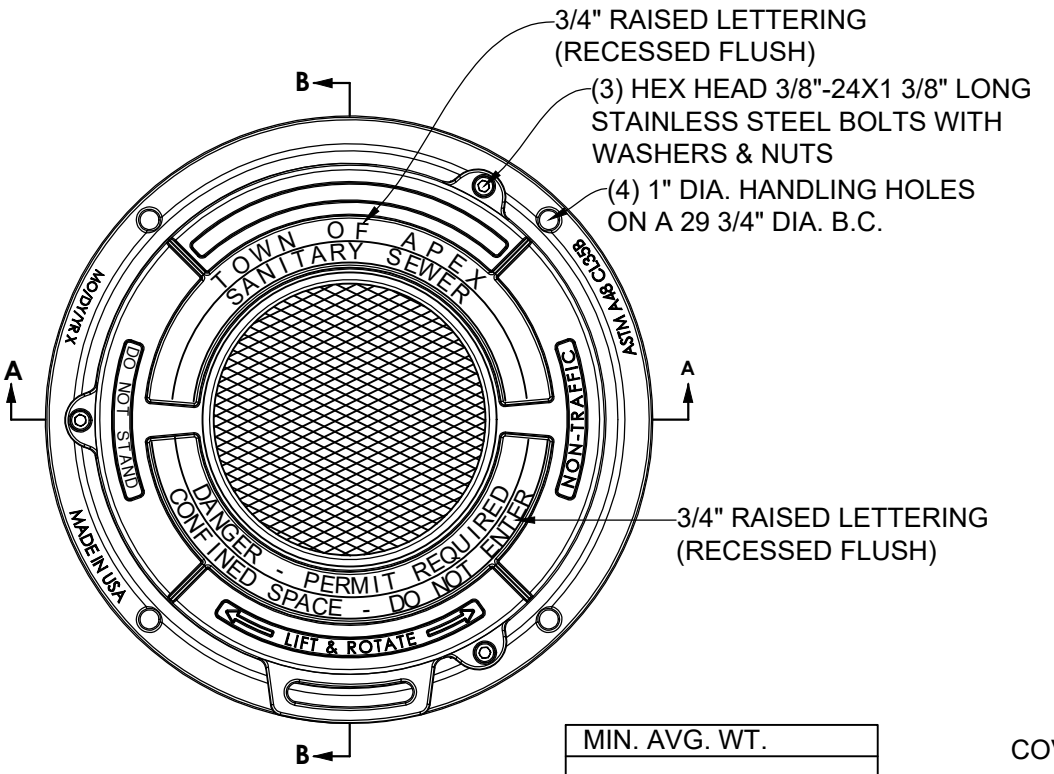


| MIN. AVG. WT. | |
|---|---|
| FRAME | 85 LBS |
| COVER | 65 LBS |
| TOTAL | 150 LBS |

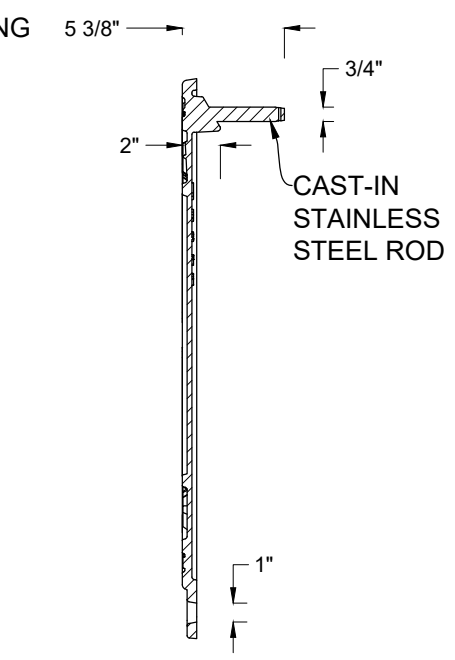


COVER SECTION B-B

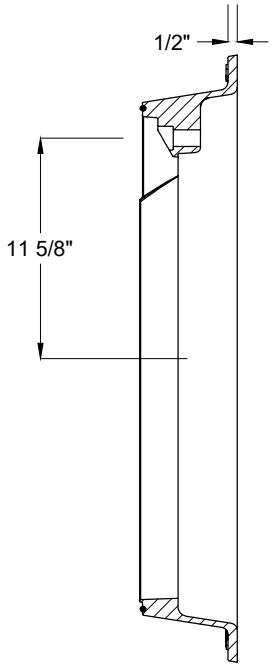


FRAME SECTION B-B

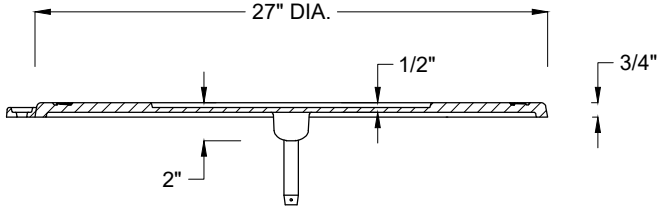


COVER SECTION A-A

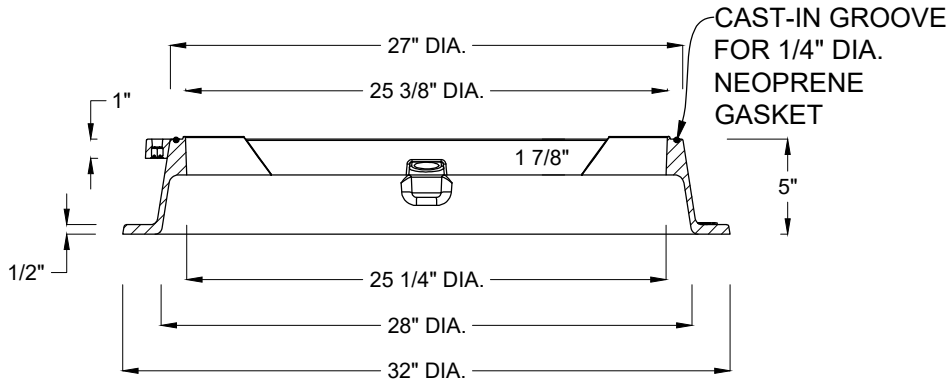


FRAME SECTION A-A

| TOWN OF APEX STANDARDS | MANHOLE RING & ROTATING COVER FOR WATERTIGHT MANHOLES (T - NON-TRAFFIC ONLY) | STD. NO. 700.05 |
|---|---|---|
| EFFECTIVE: MARCH 23, 2021 | | SHEET 2 OF 2 |

NOTES:

1. THE SEWER LINE ENTERING A DROP MANHOLE SHALL BE CONTINUOUS MATERIAL FROM THE UPSTREAM MANHOLE.

2. ONE INSIDE DROP PERMITTED WITHIN A 5 'Ø MANHOLE. TWO INSIDE DROPS PERMITTED WITHIN A 6' Ø MANHOLE.

3. A DROP MANHOLE IS REQUIRED WHEN THE DIFFERENCE BETWEEN INVERTS EXCEEDS 24".

4. ALL JOINTS WITHIN THE MANHOLE SHALL BE OF THE MECHANICAL JOINT TYPE.

5. INSIDE DROP PIPE DIAMETER SHALL BE THE SAME AS THE INFLOW SEWER LINE DIAMETER.

6. STAINLESS STEEL STRAPPING SHALL BE 1" WIDE BY $\frac{1}{8}$" THICK AND ATTACHED TO THE MANHOLE WALL WITH MASONRY ANCHORS.

7. WHERE DROP EXCEEDS 24", A SERVICE DROP CONNECTION WITH CLEANOUT SHALL BE PROVIDED IN ACCORDANCE WITH THE STANDARD DETAIL.

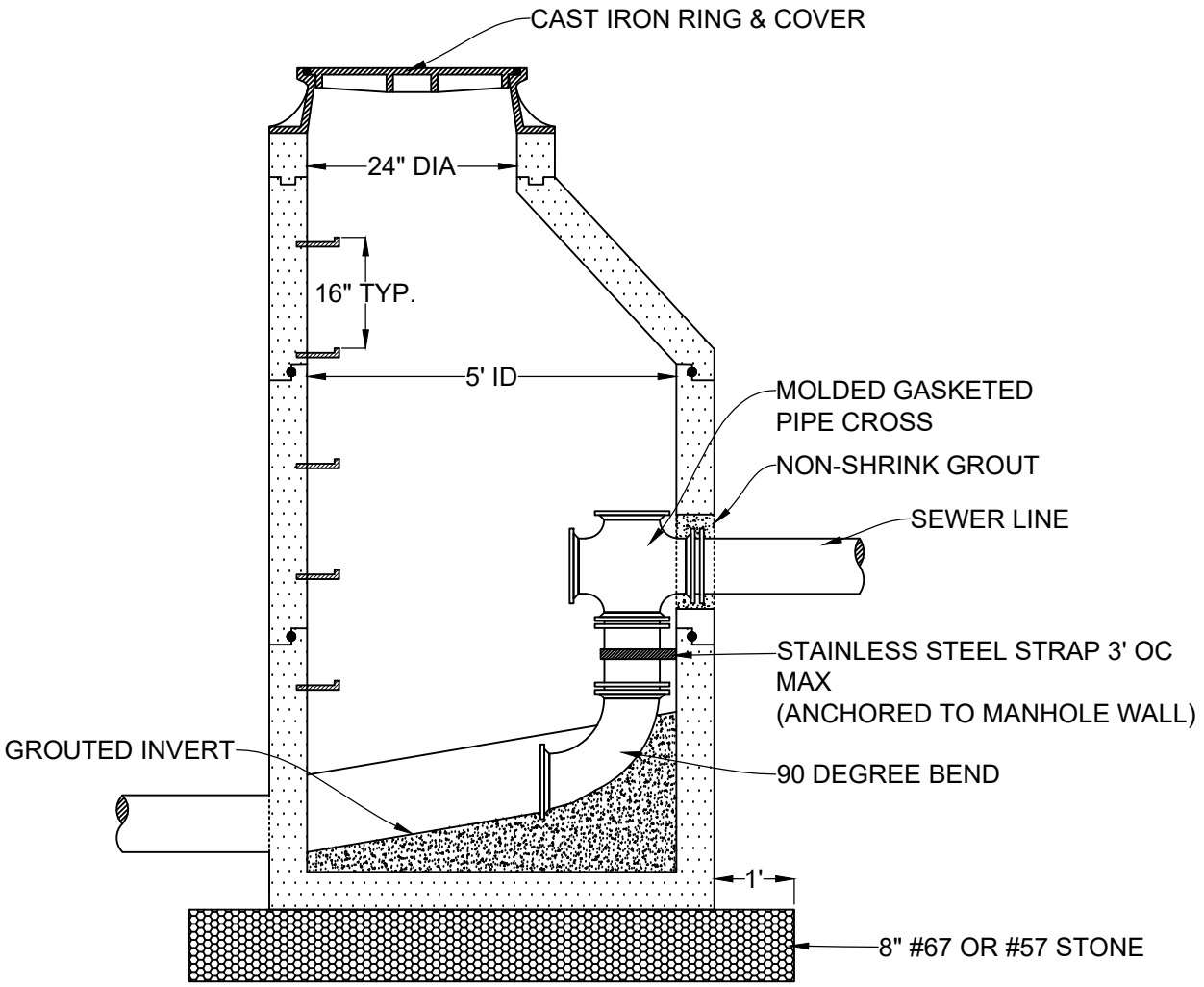


ELEVATION

| TOWN OF APEX STANDARDS | DROP MANHOLE | STD. NO. |
|---|---|---|
| EFFECTIVE: MARCH 23, 2021 | | 700.07 |
| | | SHEET 1 OF 1 |

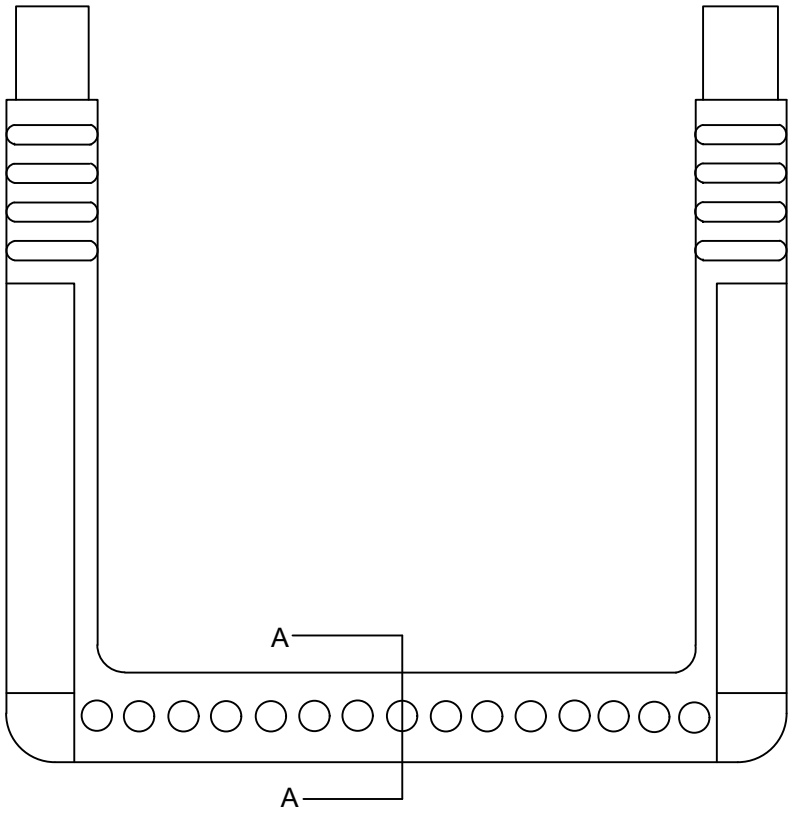


PLAN

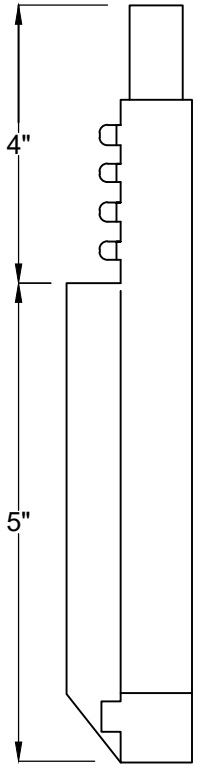


SIDE ELEVATION

NOTES:

1. VERTICAL SPACING = 16 INCHES ON CENTER, ON VERTICAL WALL ONLY.

2. STEPS TO PROTRUDE MINIMUM 5 INCHES FROM FACE OF STRUCTURE WALL.

3. STEPS SHALL MEET THE REQUIREMENTS OF ASTM C478 IN ADDITION TO A HORIZONTAL PULL-OUT LOAD OF 1000 LBS. WHEN INSTALLED.

4. ALL STEPS SHALL BE VERTICALLY ALIGNED IN A STRAIGHT LINE.

5. NO STEPS LOCATED INSIDE MANHOLE CHIMNEY.

6. ONLY THE FIRST AND LAST STEP SHALL BE PROVIDED IN SANITARY SEWER MANHOLES.

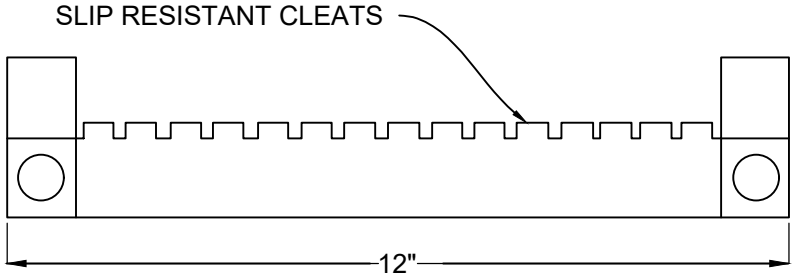


ELEVATION

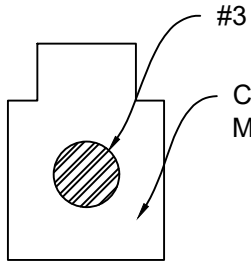


SECTION A-A

| TOWN OF APEX STANDARDS | MANHOLE STEP | STD. NO. |
|---|---|---|
| EFFECTIVE: MARCH 23, 2021 | - Page 354 - | 700.09 |
| | | SHEET 1 OF 1 |

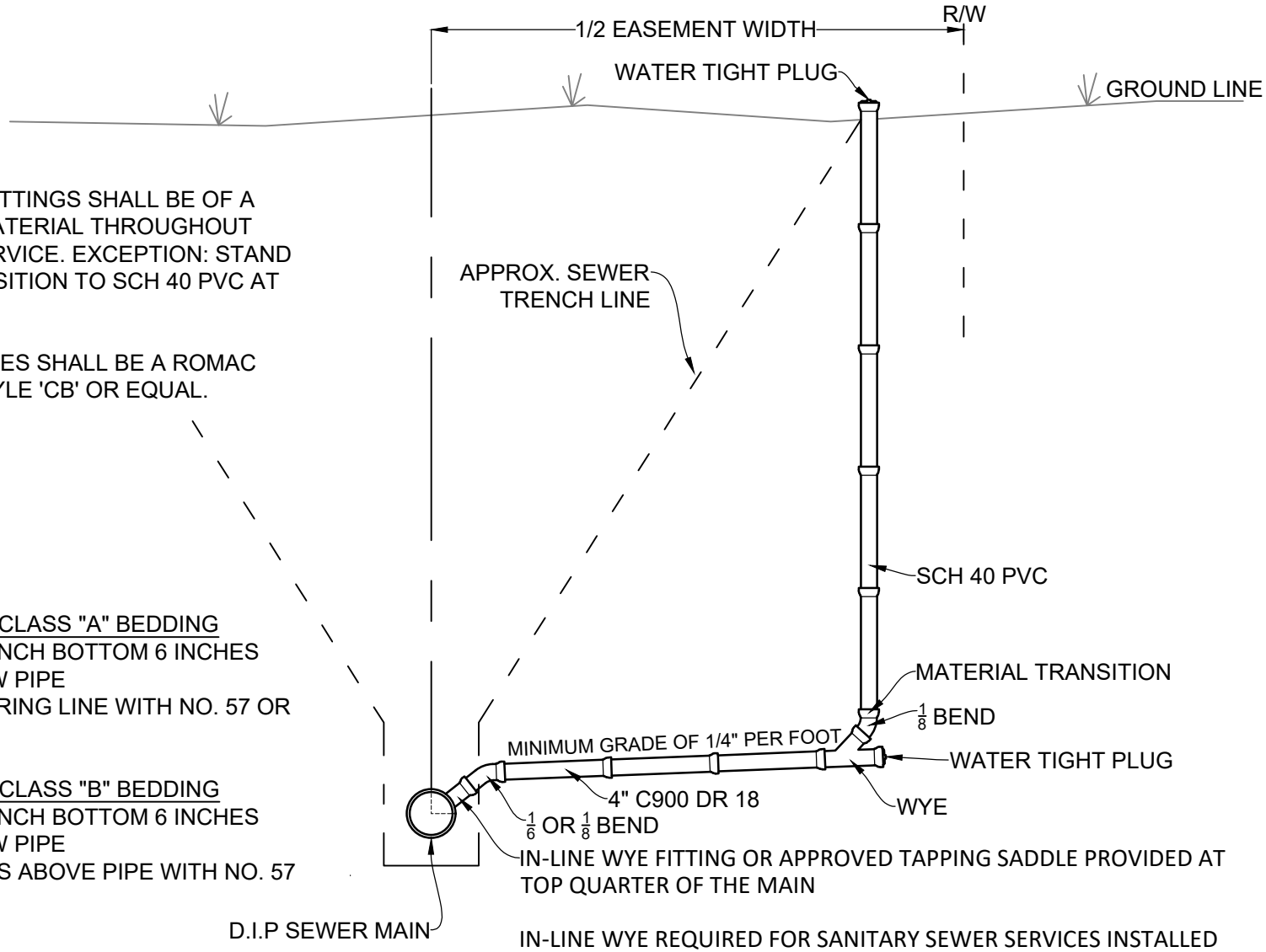


NOTES:

1. ALL PIPE AND FITTINGS SHALL BE OF A CONSISTENT MATERIAL THROUGHOUT THE ENTIRE SERVICE. EXCEPTION: STAND PIPE MAY TRANSITION TO SCH 40 PVC AT TOP OF WYE.

2. SERVICE SADDLES SHALL BE A ROMAC INDUSTRIES STYLE 'CB' OR EQUAL.

DEPTH ≤ 16 FEET - CLASS "A" BEDDING

- UNDERCUT TRENCH BOTTOM 6 INCHES MINIMUM BELOW PIPE
- FILL PIPE TO SPRING LINE WITH NO. 57 OR 67 STONE

DEPTH > 16 FEET - CLASS "B" BEDDING

- UNDERCUT TRENCH BOTTOM 6 INCHES MINIMUM BELOW PIPE
- FILL TO 6 INCHES ABOVE PIPE WITH NO. 57 OR 67 STONE

| TOWN OF APEX STANDARDS | 4" SANITARY SEWER TAP & SERVICE FOR SEWER  OVER 13' DEEP | STD. NO. 700.10 |
|---|---|---|
| EFFECTIVE: MARCH 23, 2021 | | SHEET 1 OF 1 |

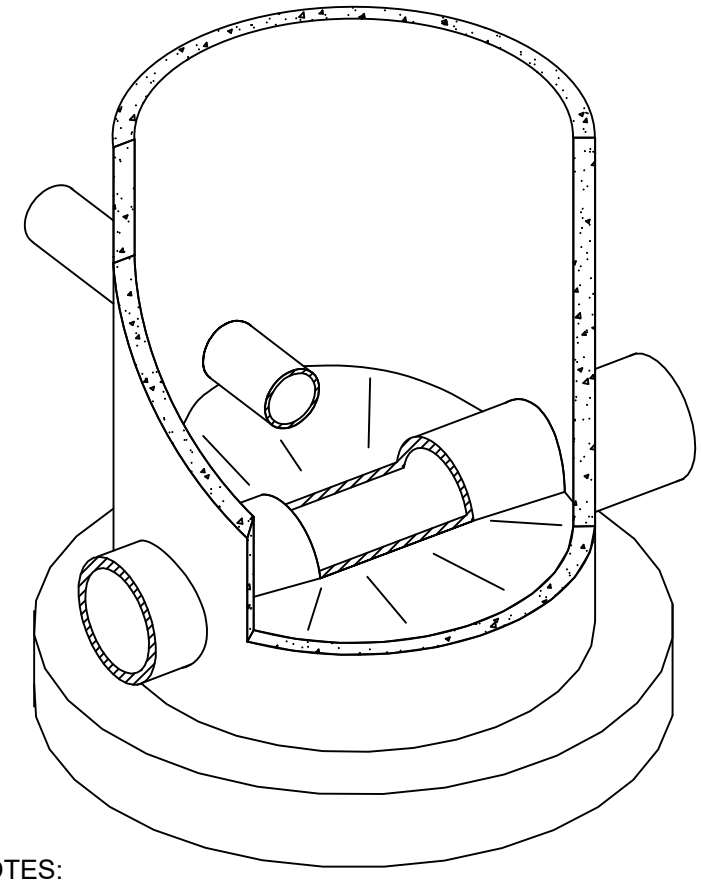

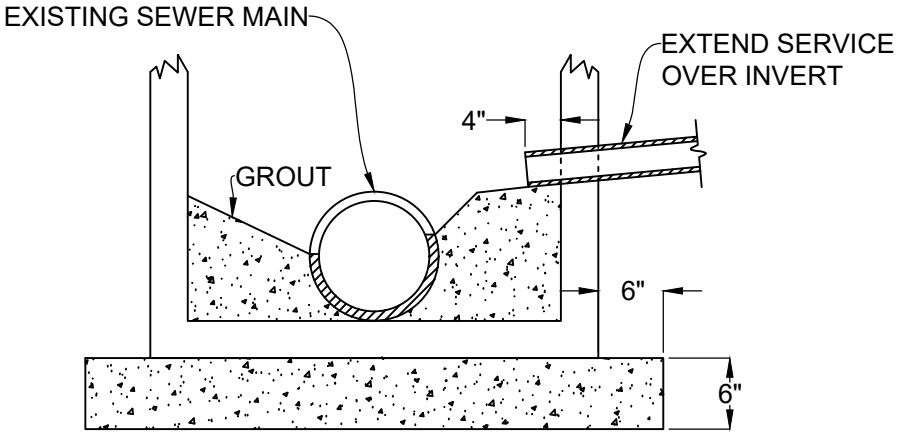


CROSS SECTION AT EXISTING MAIN

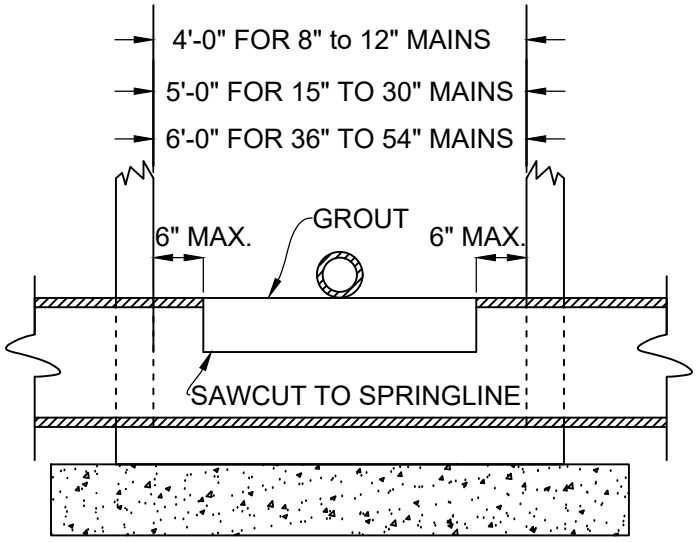


SECTION ALONG CENTERLINE OF MAIN

NOTES:

1. FLOW SHALL BE MAINTAINED DURING CONSTRUCTION.
2. THIS DETAIL TO BE USED WHEN A 6" OR LARGER LATERAL NECESSITATES CONSTRUCTION OF A NEW MANHOLE.
3. MANHOLE PAD TO REST UPON A MINIMUM 6" COMPACTED #67 OR 57 STONE BASE.
4. DOGHOUSE MANHOLES SHALL BE USED WHERE REQUIREMENTS FOR TIE-INS TO EXISTING SEWERS.

| TOWN OF APEX STANDARDS | DOGHOUSE MANHOLE INSTALLATION OVER EXIS[- Page 356 -]SEWER MAIN | STD. NO. 700.12 |
|---|---|---|
| EFFECTIVE: MARCH 23, 2021 | | SHEET 1 OF 1 |

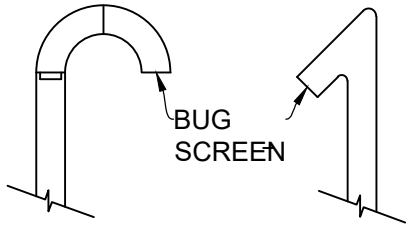


VENT

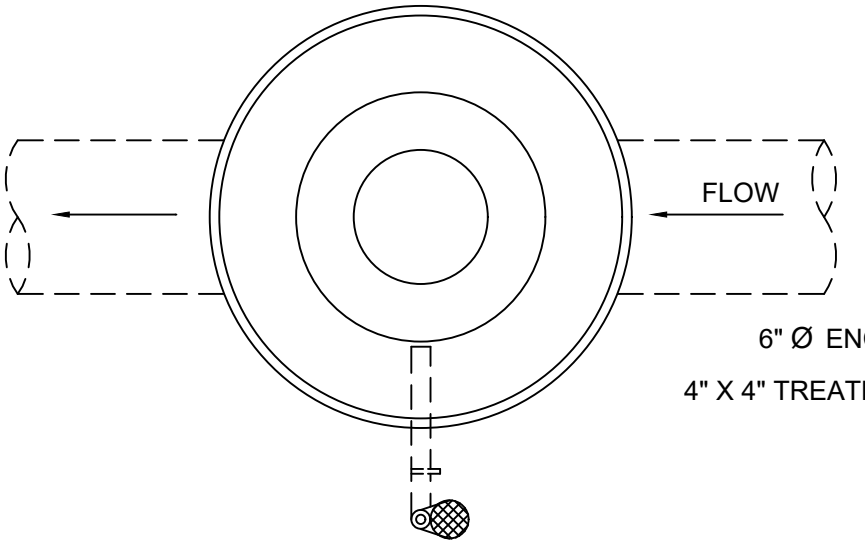


PLAN

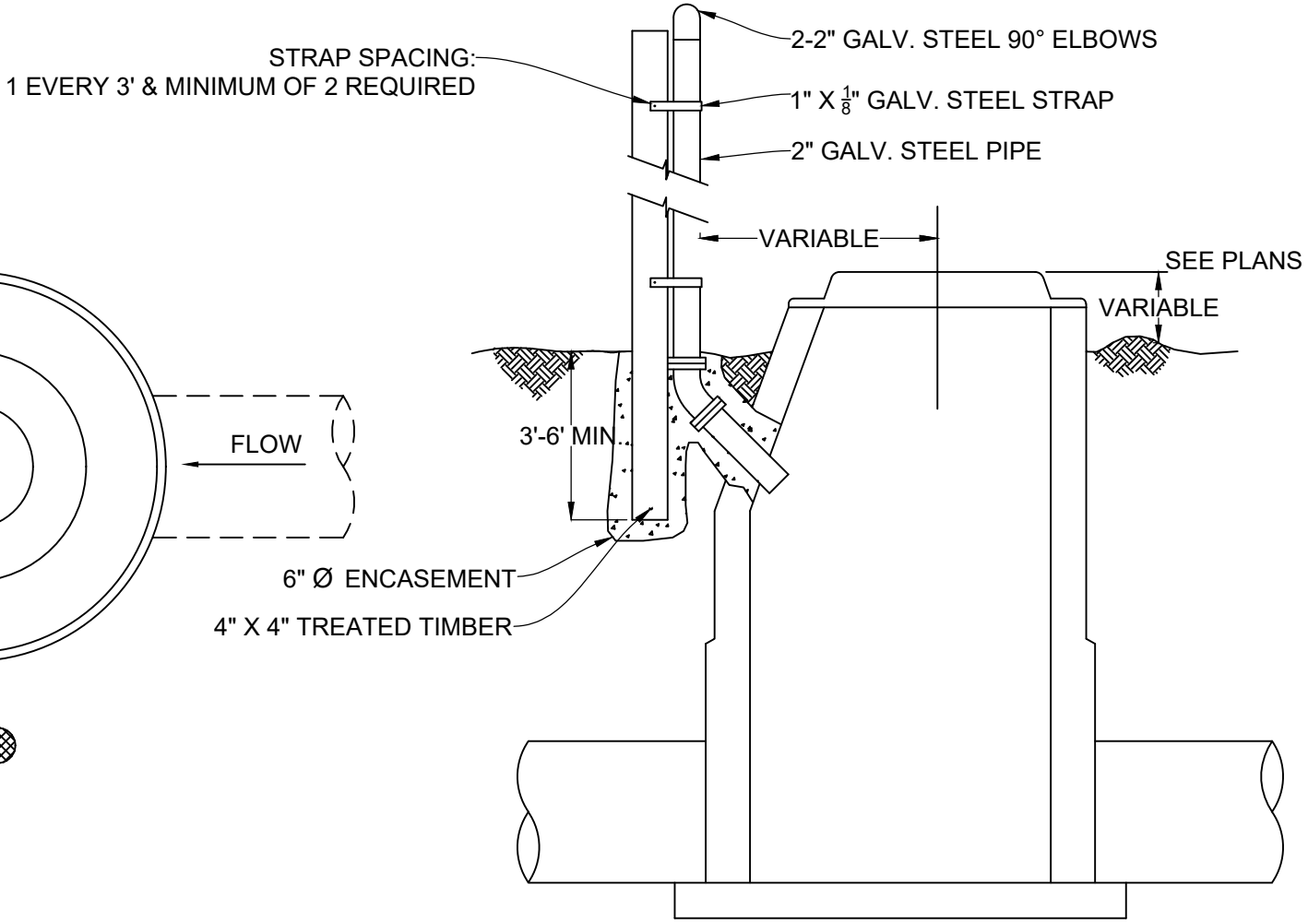


ELEVATION

NOTES:

1. LOCATION OF VENT PIPE SHALL BE AS DIRECTED BY THE CONSTRUCTION INSPECTOR.
2. WATERTIGHT RING AND COVER VENT TOP TO BE A MINIMUM OF 2FT. ABOVE 100 YEAR FLOOD PLAIN ELEVATION.

| TOWN OF APEX STANDARDS | MANHOLE VENT | STD. NO. |
|---|---|---|
| EFFECTIVE: MARCH 23, 2021 | | 700.13 |
| | | SHEET 1 OF 1 |

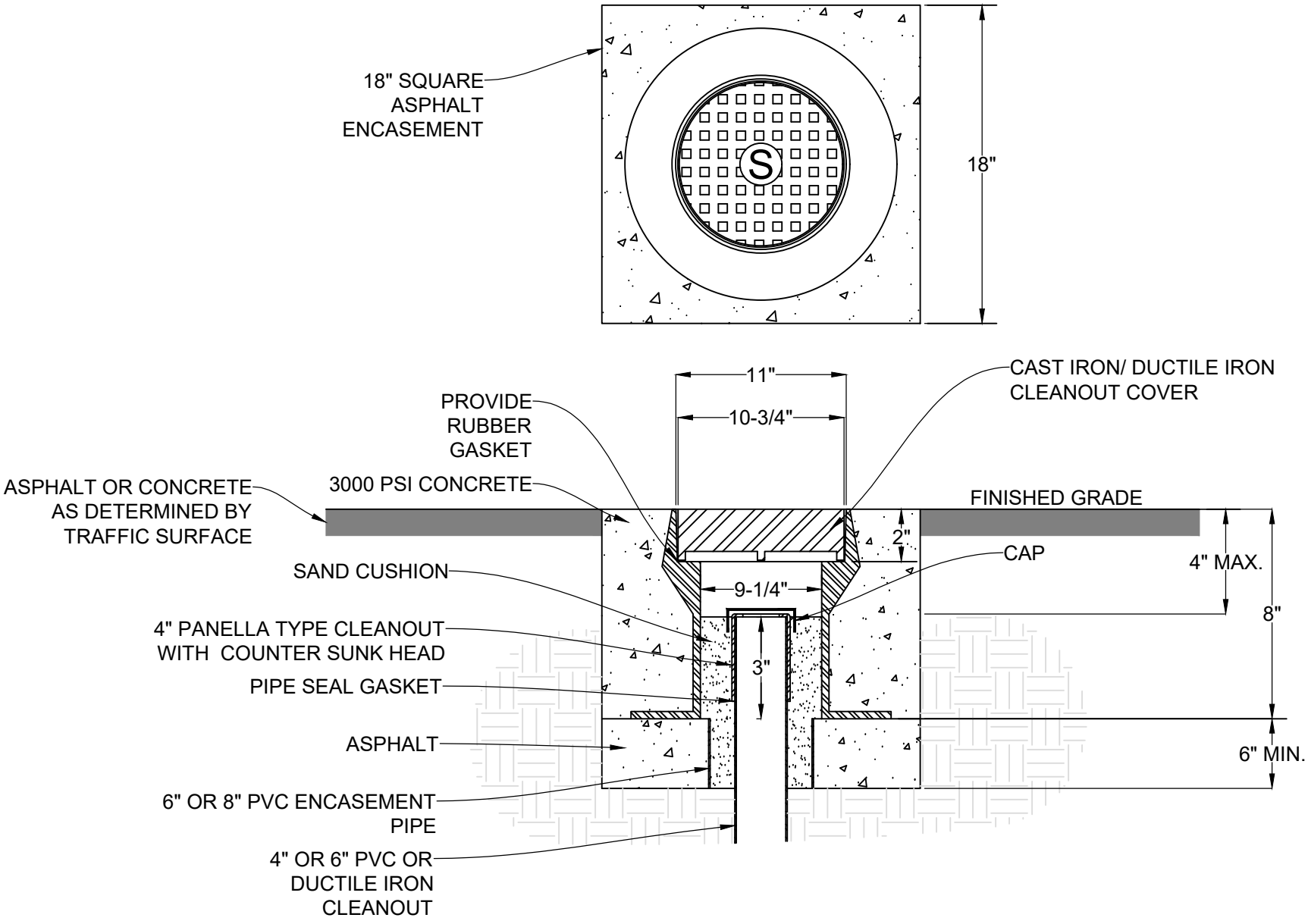


| TOWN OF APEX STANDARDS | CLEANOUT COVER FOR VEHICLE TRAFFIC AREAS | STD. NO. |
|---|---|---|
| EFFECTIVE: MARCH 23, 2021 | - Page 358 - | 700.14 |
| | | SHEET 1 OF 1 |

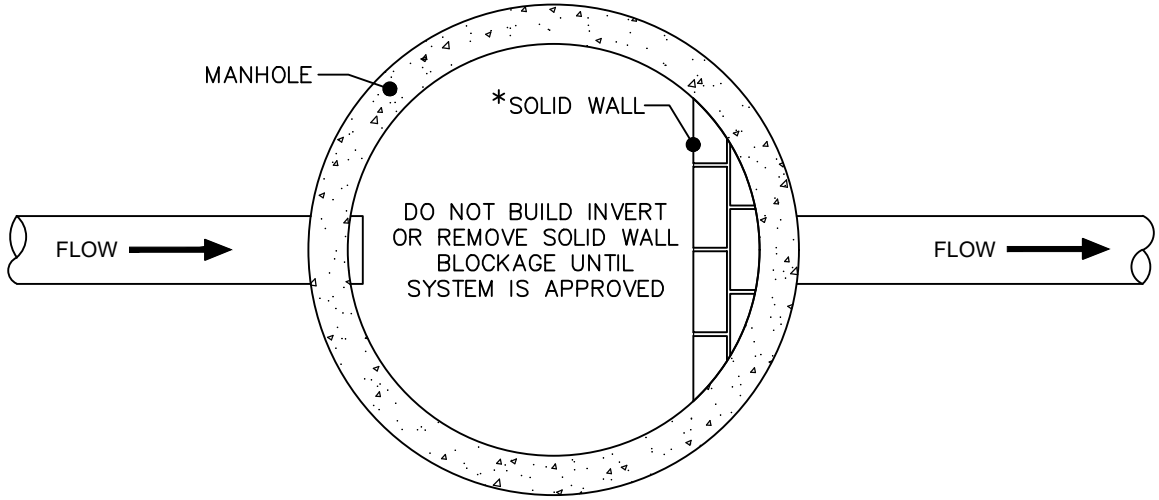


PLAN VIEW

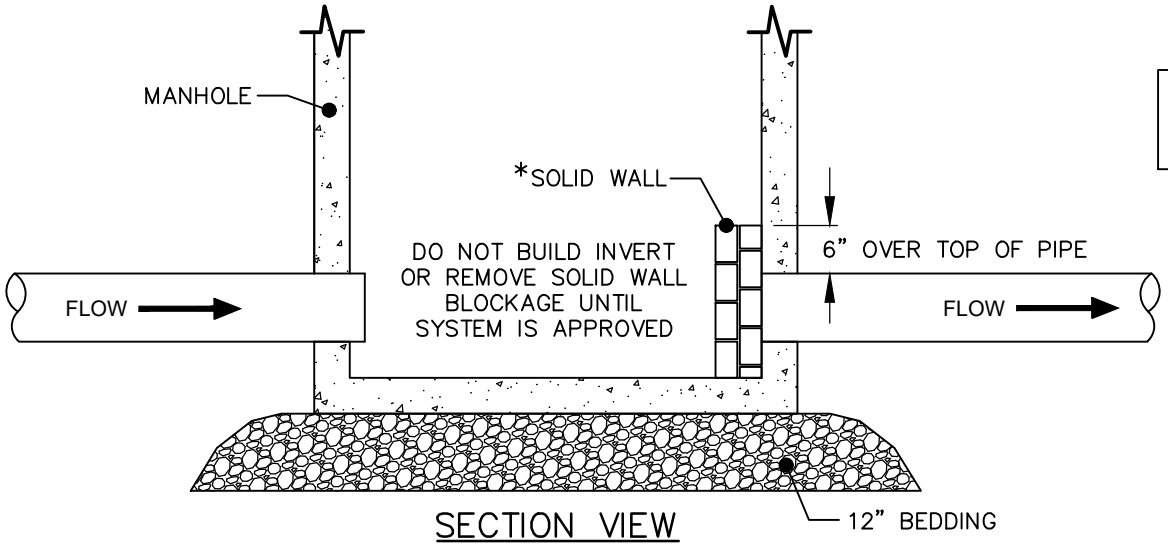


SECTION VIEW

USE SOLID BRICK/BLOCK & MORTAR

| PIPE DIAMETER | MINIMUM WALL THICKNESS |
|---|---|
| 8" – 12" | 4" |
| 16" OR GREATER | 8" |

*LOCATED IN FIRST MANHOLE FROM TIE–IN. SOLID WALL MUST BE BUILT BEFORE LAYING NEXT RUN OF PIPE.

| TOWN OF APEX STANDARDS | SANITARY SEWER PROTECTION DURIN NSTRUCTION | STD. NO. |
|---|---|---|
| EFFECTIVE: MARCH 23, 2021 |  | 700.16 |
| | | SHEET 1 OF 1 |

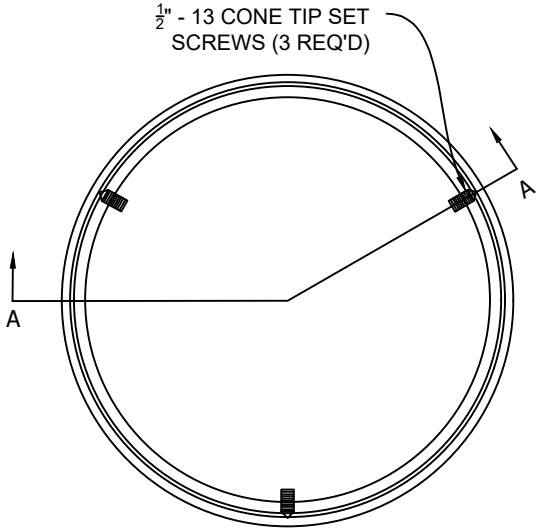


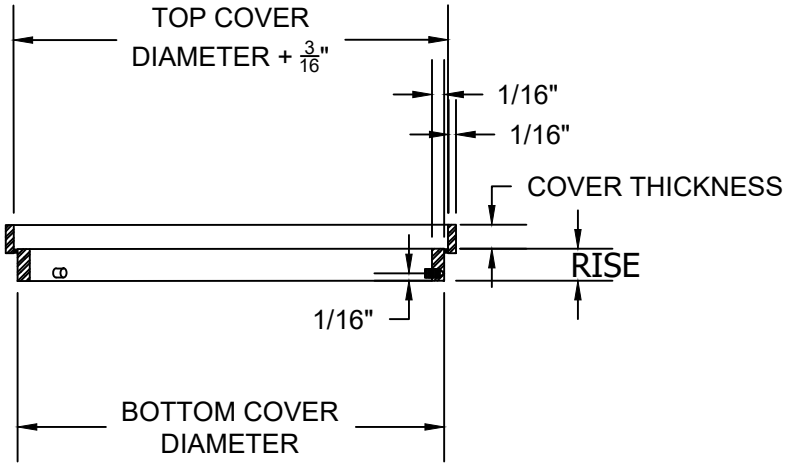


SECTION "A-A"

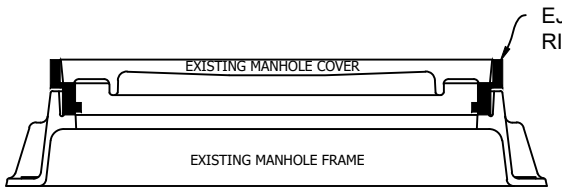


TYPICAL INSTALLATION
SHOWING IN RAISED POSITION

1. MATERIAL SHALL MEET OR EXCEED MINIMUM REQUIREMENTS OF ASTM A36 CARBON STEEL.
2. TOP AND BOTTOM RINGS SHALL HAVE A CONTINUOUS WELD.
3. ALL STYLE RISERS SHALL HAVE A MINIMUM HEIGHT OF ADJUSTMENT EQUAL TO THE MANHOLE COVER THICKNESS PLUS ¼".
4. EACH RISER IS CUSTOM FABRICATED FROM MEASUREMENTS PROVIDED WITH EACH OTHER. REQUIRED MEASUREMENTS INCLUDE THE FOLLOWING:
   A. EXIST. MANHOLE COVER DIAMETER - TOP & BOTTOM
   B. EXIST. MANHOLE COVER THICKNESS
   C. REQUIRED HEIGHT OF ADJUSTMENT
5. MAXIMUM RECOMMENDED HEIGHT OF ADJUSTMENT FOR REPAVING PROJECTS IS 6".
6. HEIGHT ADJUSTMENTS ARE AVAILABLE IN ¼" INCREMENTS.
7. DURING INSTALLATION CHECK FOR FULL BEARING OF LOWER FRAME SECTION ON EXISTING CASTING.
8. DIMENSIONS MAY VARY TO MEET EXISTING FIELD CONDITIONS. ANY CHANGE IN DIMENSIONS SHALL BE APPROVED BY THE OWNER.
9. AFTER FABRICATION, RISERS ARE COATED WITH EITHER A WATER BASED BITUMINOUS ASPHALT EMULSION PAINT OR BASE F-COAT W/ CHARCOAL BLACK TOPCOAT.
10. AVAILABLE OPTIONS IN LIEU OF CONE POINT SET SCREWS INCLUDE "L" CLIPS WITH HEX HEAD BOLTS.
11. IT IS PREFERABLE THAT THESE RISERS ONLY BE USED AS A LAST RESORT WHEN THE MANHOLE CAN'T BE RAISED IN ITS ENTIRETY

| TOWN OF APEX STANDARDS | SOLID STEEL RISER ASSEMBLY | STD. NO. |
|---|---|---|
| EFFECTIVE: MARCH 23, 2021 | | 700.18 |
| | | SHEET 1 OF 1 |

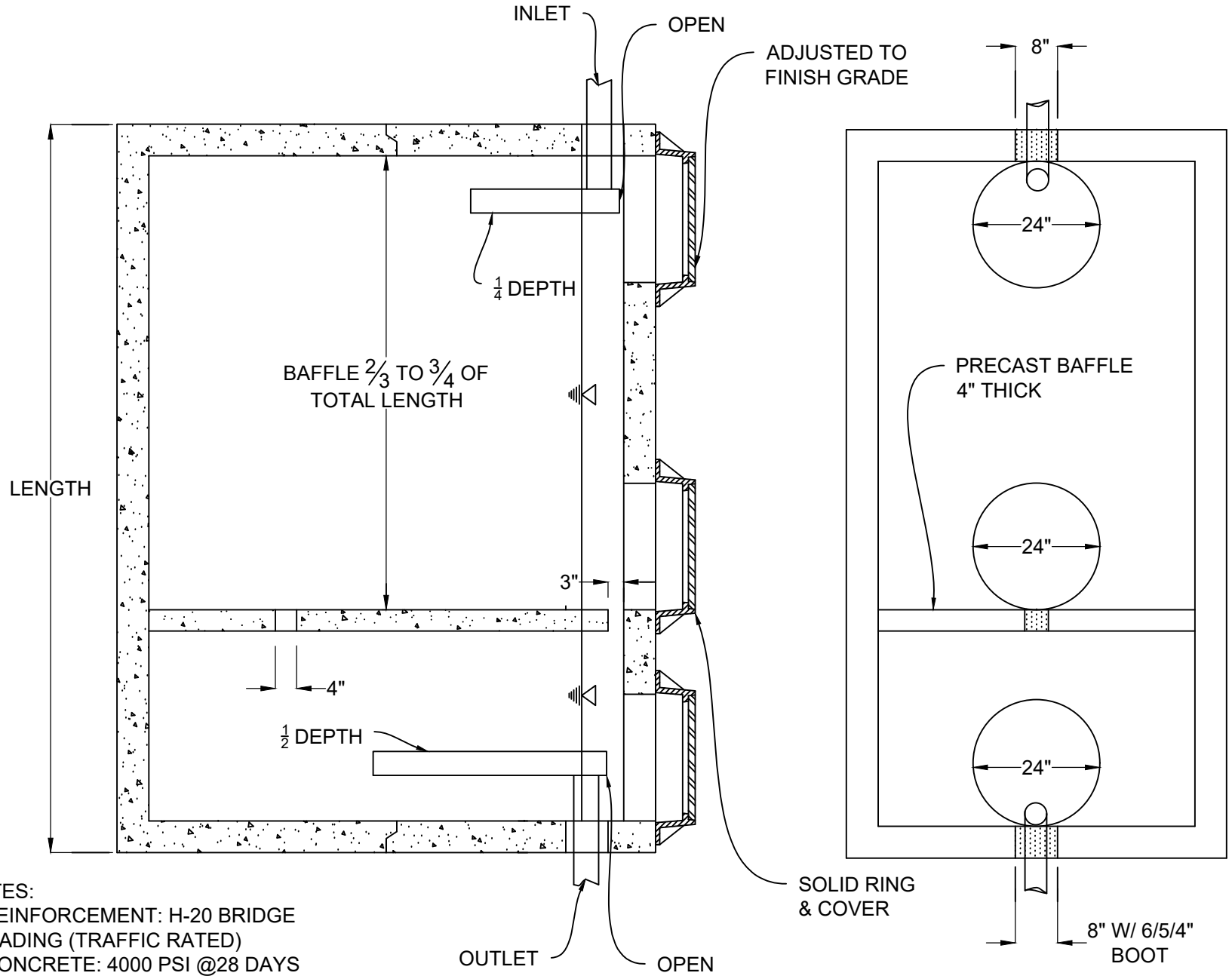


NOTES:
1. REINFORCEMENT: H-20 BRIDGE LOADING (TRAFFIC RATED)
2. CONCRETE: 4000 PSI @28 DAYS
3. EARTHCOVER: 0' TO 5' MAX.

| TOWN OF APEX STANDARDS | OIL AND GREASE STRUCTURES | STD. NO. |
|---|---|---|
| EFFECTIVE: MARCH 23, 2021 | | 700.19 |
| | | SHEET 1 OF 2 |

| LOCALLY AVAILABLE SIZES | |
|---|---|
| INTERCEPTOR CAPACITY (GAL.) | SEPARATOR CAPACITY (GAL.) |
| 300 | 1000 |
| 550 | 1200 |
| 750 | 1600 |
| 1000 | |
| 1200 | |
| 1500 | |
| 2000 | |
| 2500 | |
| 3000 | |
| 4000 | |
| 5000 | |
| 6000 | |
| 8000 | |

NOTES:

1. BAFFLE WALL LOCATED AT A DISTANCE FROM INLET WALL $\frac{2}{3}$ TO $\frac{3}{4}$ OF THE TOTAL LENGTH OF THE INTERCEPTOR OR SEPARATOR AS SHOWN ON DETAIL S-40. BAFFLE WALLS LOCATED AT A DISTANCE APPROXIMATELY OF $\frac{1}{3}$ OF THE TOTAL LENGTH OF THE SEPARATOR AS SHOWN ON DETAIL S-40.01.
2. EACH INTERCEPTOR OR SEPARATOR SHALL HAVE INLET AND OUTLET TEES. THE OUTLET TEE SHALL EXTEND 50% INTO THE LIQUID DEPTH. THE INLET TEE SHALL EXTEND 25% INTO THE LIQUID DEPTH. INLET AND OUTLET TEES MUST BE OPEN TO ALLOW THE COLLECTION OF F.O.G.
3. ACCESS OPENINGS OVER EACH COMPARTMENT WITHIN THE INTERCEPTOR OR SEPARATOR SHALL BE 24 INCHES IN DIAMETER AND CONTAIN PICK HOLES. ALL COVERS SHALL BE CONSTRUCTED OF CAST IRON OR EQUIVALENT TRAFFIC BEARING MATERIAL. MANHOLE COVERS MUST EXTEND TO FINISH GRADE AND BE INSTALLED TO EXCLUDE THE ENTRANCE OF STORMWATER INTO THE INTERCEPTOR OR SEPARATOR.
4. FULL SIZE DUAL SWEEP CLEANOUTS SHALL BE INSTALLED ON THE INLET AND OUTLET SIDES OF THE INTERCEPTOR OR SEPARATOR.
5. INTERCEPTORS AND SEPARATORS MUST BE VENTED IN ACCORDANCE WITH THE NC STATE PLUMBING CODE.
6. CONCRETE: 4000 PSI @ 28 DAYS
7. DESIGN: ACI 318 BUILDING CODE
   ASTM C1613-06 FOR GREASE INTERCEPTORS
   ASTM C913-02 FOR WATER AND WASTEWATER STRUCTURES
   ASTM C890-06 FOR MINIMAL STRUCTURAL DESIGN LOADING
8. INTERCEPTORS AND SEPARATORS SHALL BE DESIGNED TO WITHSTAND AN H-20 WHEEL LOAD
9. INTERCEPTORS OR SEPARATORS MADE OF POLYETHYLENE OR FIBERGLASS SHALL INCLUDE A MINIMUM 12,000 PSI TENSILE STRENGTH, 19,000 PSI FLEXURAL STRENGTH, AND 800,000 PSI FEXURAL MODULUS.
10. ALL INTERCEPTORS AND SEPARATORS SHALL BE INSTALLED IN ACCORDANCE WITH THE MANUFACTURERS SPECIFICATIONS.

| TOWN OF APEX STANDARDS | DIMENSIONS: GREASE INTERCEPTORS OIL-WATER SEPARATORS | STD. NO. |
|---|---|---|
| EFFECTIVE: MARCH 23, 2021 | | 700.19 |
| | | SHEET 2 OF 2 |

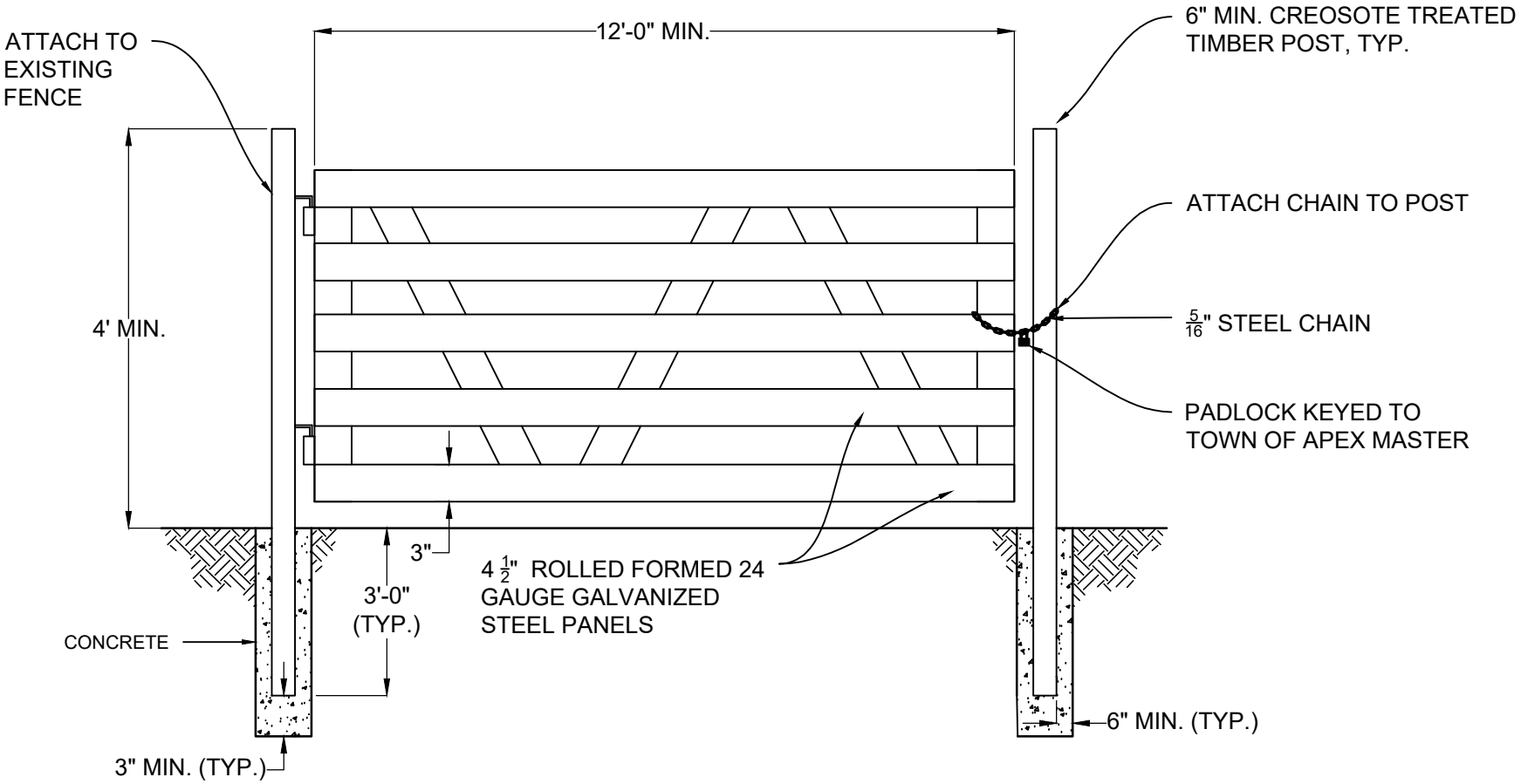


NOTE:

1. A FENCE GATE IS REQUIRED AT THE LOCATION WHERE IT CROSSES THE SANITARY SEWER EASEMENT. GATE MUST BE CENTERED ON THE SEWER PIPE. OWNER MUST APPLY FOR ENCROACHMENT AGREEMENT PRIOR TO INSTALLATION.
2. IN RESIDENTIAL AREAS, ALTERNATE FENCE GATES MATCHING EXISTING FENCES MAY BE USED AS APPROVED BY THE WATER RESOURCES DIRECTOR.

| TOWN OF APEX STANDARDS | TYPICAL EASEMENT FENCE GATE | STD. NO. |
|---|---|---|
| EFFECTIVE: MARCH 23, 2021 | - Page 363 - | 700.20 |
| | | SHEET 1 OF 1 |

NOTES:

1. COAT INTERIOR OF MANHOLE WITH APPROVED EPOXY COATING AT MINIMUM 80 MILS. COATINGS SHALL CONFORM TO TOWN OF APEX SPECIFICATION SECTION 800.
2. ELEVATION OF FORCE MAIN CROWN SHALL BE AT SAME ELEVATION AS THE GRAVITY SEWER CROWN.
3. PROVIDE SMOOTH CHANNEL FROM FORCE MAIN TO GRAVITY SEWER
4. FORCE MAINS SHALL BE CONSTRUCTED OF DUCTILE IRON OR PVC PIPE.
5. C900 PVC PIPE MAY BE USED WHEN APPROVED BY THE WATER RESOURCES DEPARTMENT AND CONFORMS TO AWWA C900/C905.
6. ALL DUCTILE IRON PIPE SHALL BE DESIGNED AS PER AWWA STANDARD C150 AND SHALL BE LINED WITH PROTECTO 401.
7. ALL FORCE MAINS SHALL BE SUBJECTED TO A HYDROSTATIC TEST ACCORDING TO THE PROVISIONS OF SECTION 600.
8. A CHECK VALVE AND PLUG VALVE SHALL BE PROVIDED FOR THE DISCHARGE LINE OF EACH PUMP.

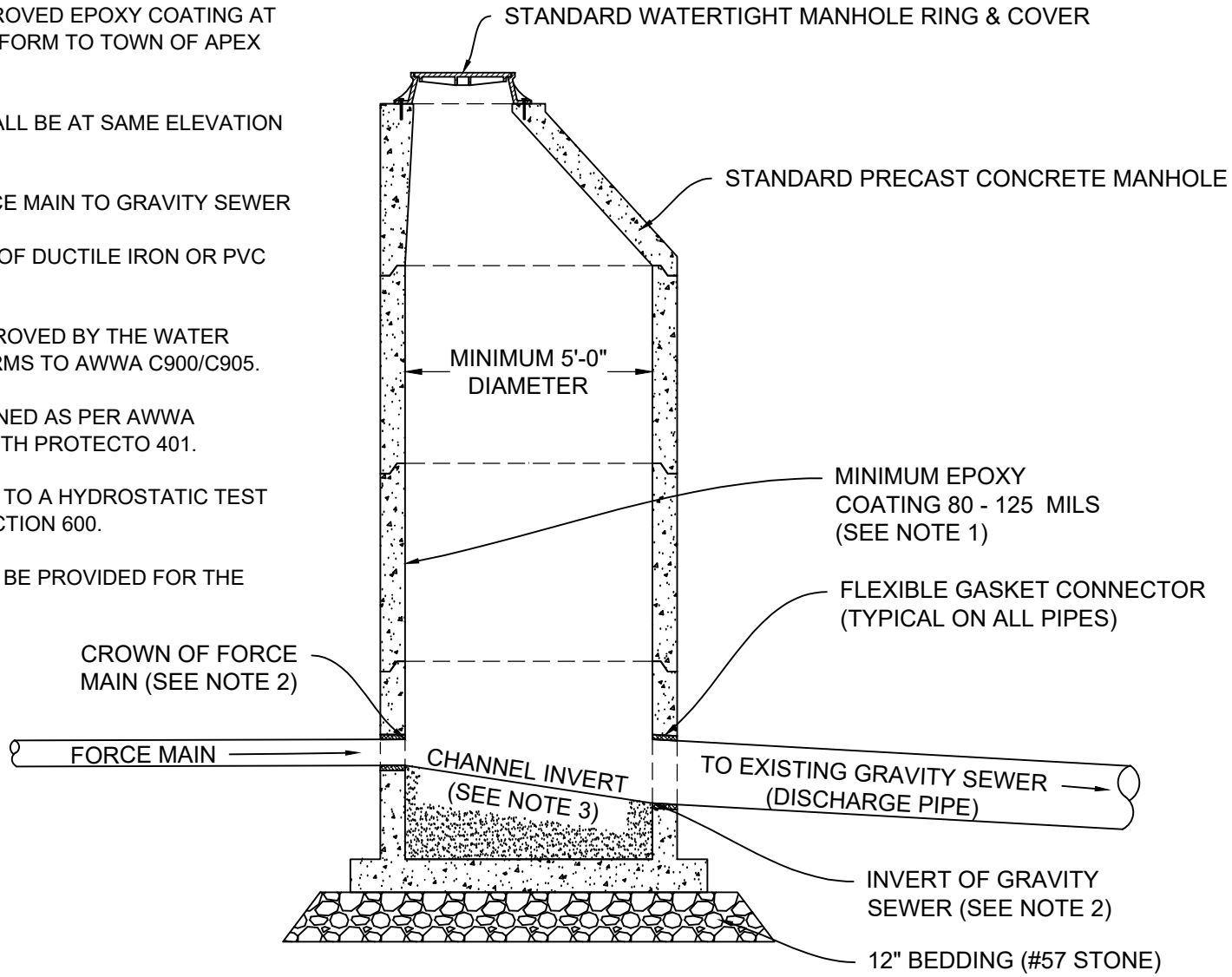


| TOWN OF APEX STANDARDS | FORCE MAIN DISCHARGE MANHOLE | STD. NO. |
|---|---|---|
| EFFECTIVE: MARCH 23, 2021 | | 800.01 |
| | | SHEET 1 OF 1 |

NOTES:

1. NO CONCRETE SHALL TOUCH BOLTS OF GLANDS. WRAP BOLTS AND GLAND W/ 6 MIL POLYETHYLENE SHEETING.
2. WHERE DEPTH OF VALVE OPERATING NUT IS GREATER THAN 5', CONTRACTOR SHALL PROVIDE AND INSTALL EXTENSION STEM USING MANUFACTURER APPROVED EXTENSION KIT. DEPTH OF EXTENDED OPERATING NUT SHALL BE NO GREATER THAN 2'.
3. VALVE BOX SHALL NOT CONTACT VALVE OR MAIN. PLACE PEA GRAVEL UNDER BOX FOR SUPPORT.
4. PLUG VALVE MUST BE PROVIDED FOR THE DISCHARGE LINE OF EACH PUMP.
5. VALVES SHALL BE RATED TO 175 PSI (MINIMUM) WORKING PRESSURE.
6. ALL PIPING, COUPLINGS, FITTINGS, VALVE , ETC. SHALL BE CLASS 125 FLANGES MEETING ANSI B18.7 SPECIFICATIONS.
7. PLUG VALVES SHALL BE CAPABLE OF PASSING 3-INCH SOLIDS.

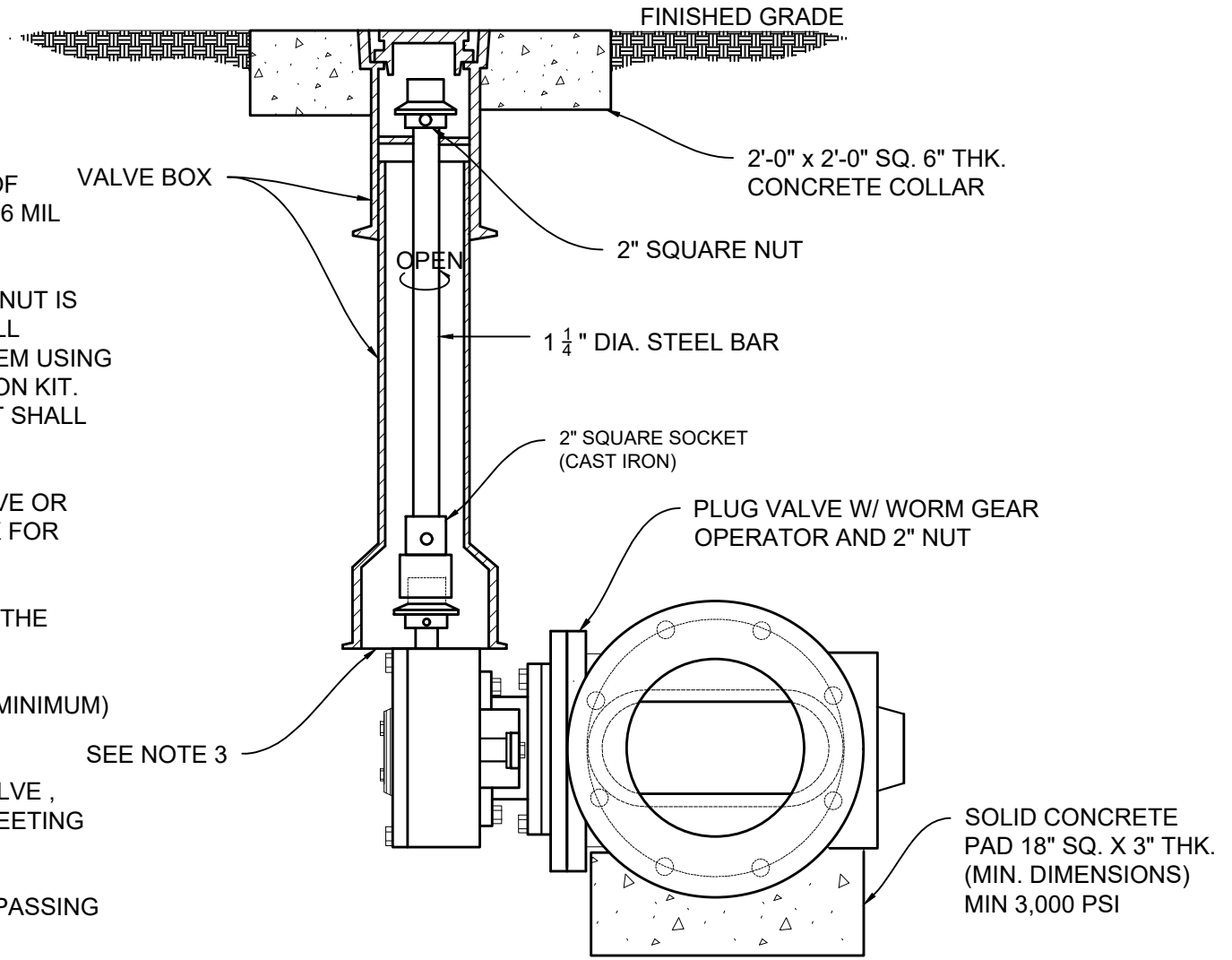


NOT TO SCALE

| TOWN OF APEX STANDARDS | PLUG VALVE BOX INSTALLATION | STD. NO. |
|---|---|---|
| EFFECTIVE: MARCH 23, 2021 | | 800.02 |
| | | SHEET 1 OF 1 |

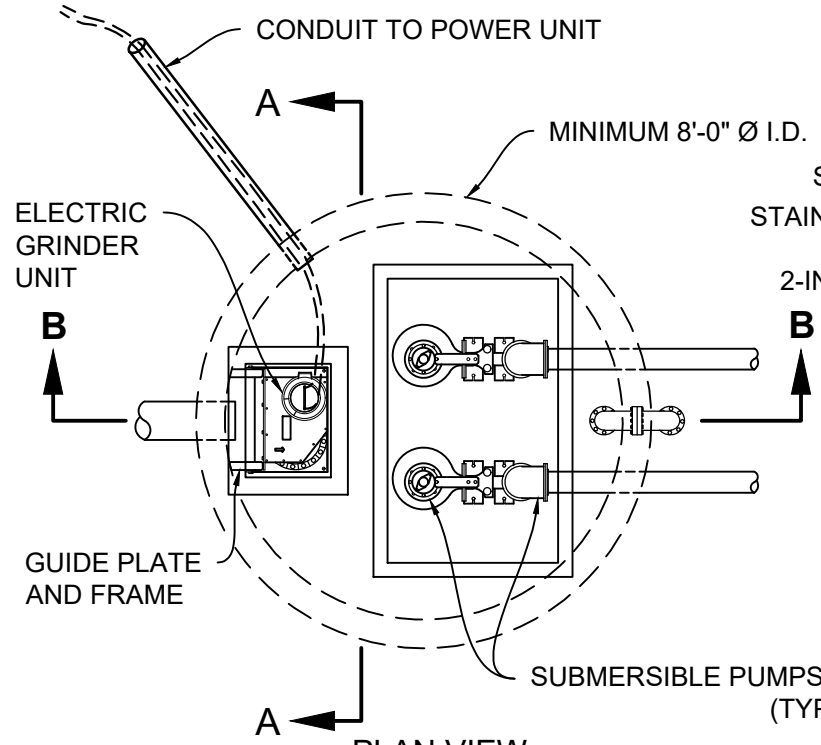


PLAN VIEW

SEE SHEET 2 OF 2 FOR SECTION "B-B"

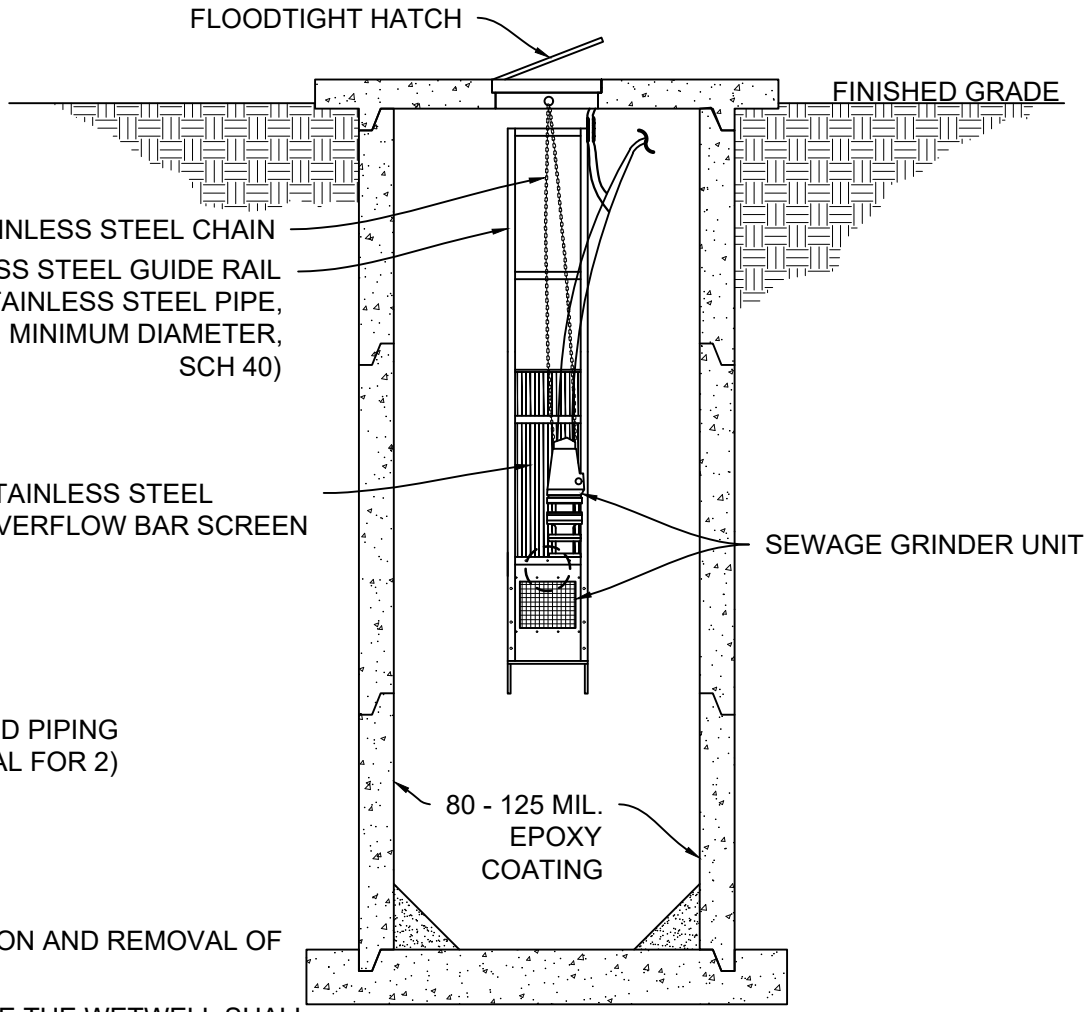


SECTION "A-A"

SEE PLAN VIEW & SECTION "B-B" FOR SUBMERSIBLE PUMPS AND PIPING.

NOTE:

1. ACCESS HATCH SHALL BE SIZED TO ALLOW FOR INSTALLATION AND REMOVAL OF GRINDER UNIT.
2. ALL BOLTED CONNECTION (INCLUDING PIPE FLANGES) INSIDE THE WETWELL SHALL BE MADE USING STAINLESS STELL BLOTS, NUTS, AND WASHERS.
3. ALL WETWELLS MUST BE CONCENTRIC.
4. ENGINEER SHALL ENSURE WETWELL HAS SUFFICIENT CONCRETE FOR ANCHORING. BUOYANCY CALCULATIONS SHALL BE SUBMITTED IF REQUIRED OR REQUESTED BY THE TOWN.
5. STATION SHALL MEET REQUIREMENTS FROM NCDEQ INCLUDING ELEVATION AND/OR PROTECTION FROM FLOODING.

| TOWN OF APEX STANDARDS | SEWAGE GRINDER UNIT (WET WELL INSTALLATION) | STD. NO. 800.03 |
|---|---|---|
| EFFECTIVE: MARCH 23, 2021 | | SHEET 1 OF 2 |

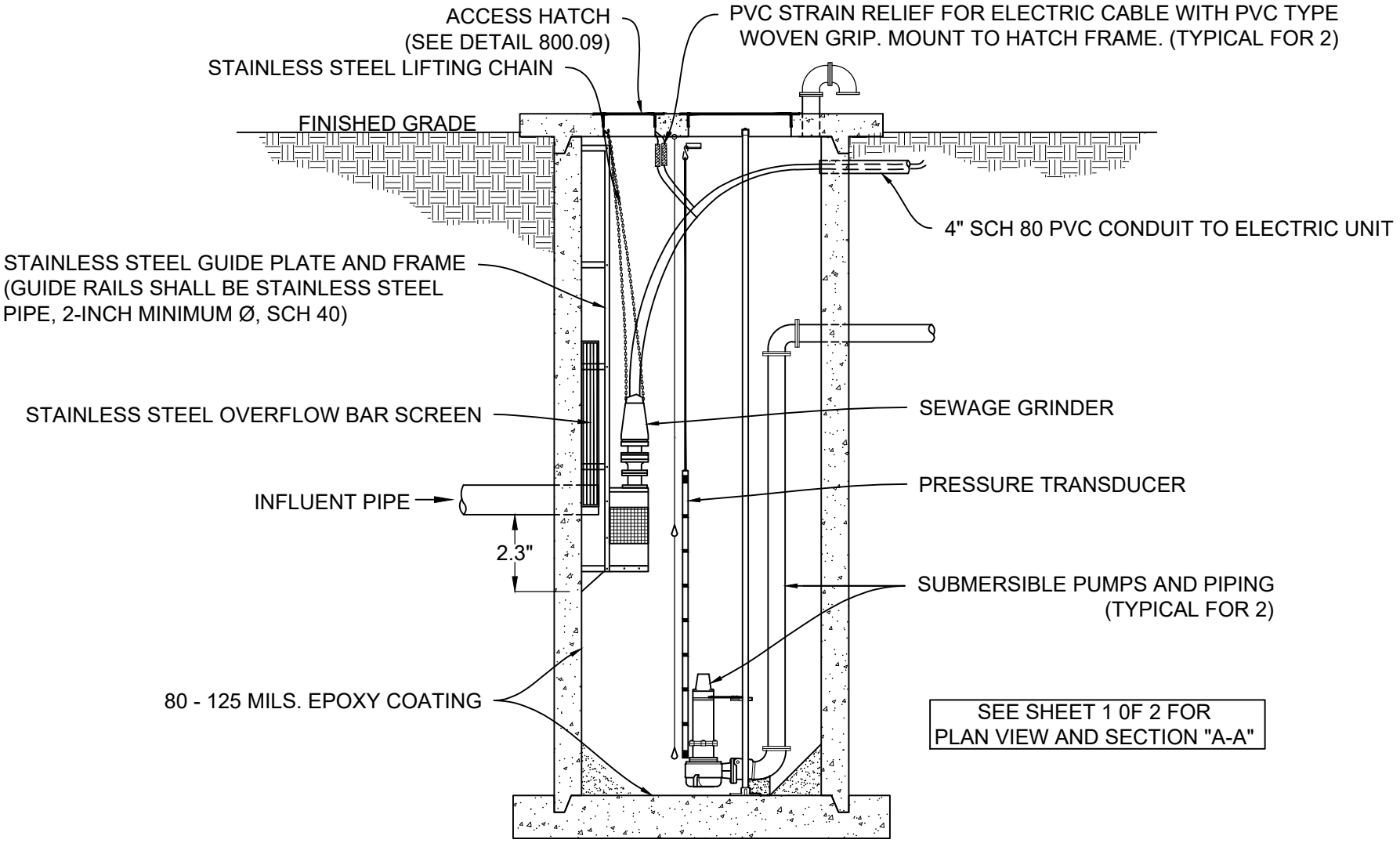


SECTION "B-B"

| TOWN OF APEX STANDARDS | SEWAGE GRINDER UNIT (WET WELL INSTALLATION) | STD. NO. 800.03 |
|---|---|---|
| EFFECTIVE: MARCH 23, 2021 | | SHEET 2 OF 2 |

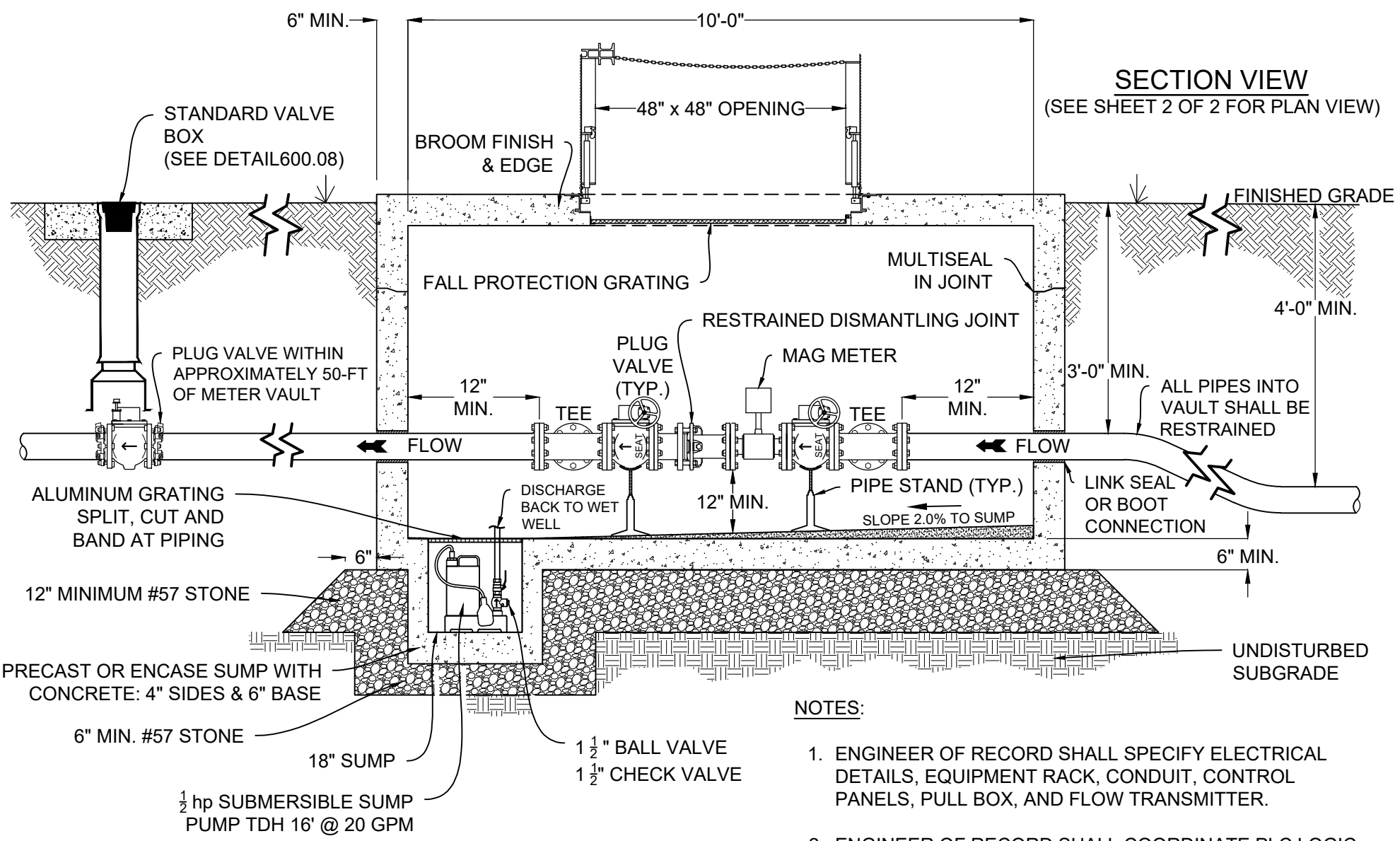


NOTES:

1. ENGINEER OF RECORD SHALL SPECIFY ELECTRICAL DETAILS, EQUIPMENT RACK, CONDUIT, CONTROL PANELS, PULL BOX, AND FLOW TRANSMITTER.
2. ENGINEER OF RECORD SHALL COORDINATE PLC LOGIC WITH OWNER.
3. ACCESS HATCH SHALL BE CENTERED OVER METER.

| TOWN OF APEX STANDARDS | STANDARD MAG METER INSTALLATION | STD. NO. |
|---|---|---|
| EFFECTIVE: MARCH 23, 2021 | | 800.04 |
| | | SHEET 1 OF 2 |

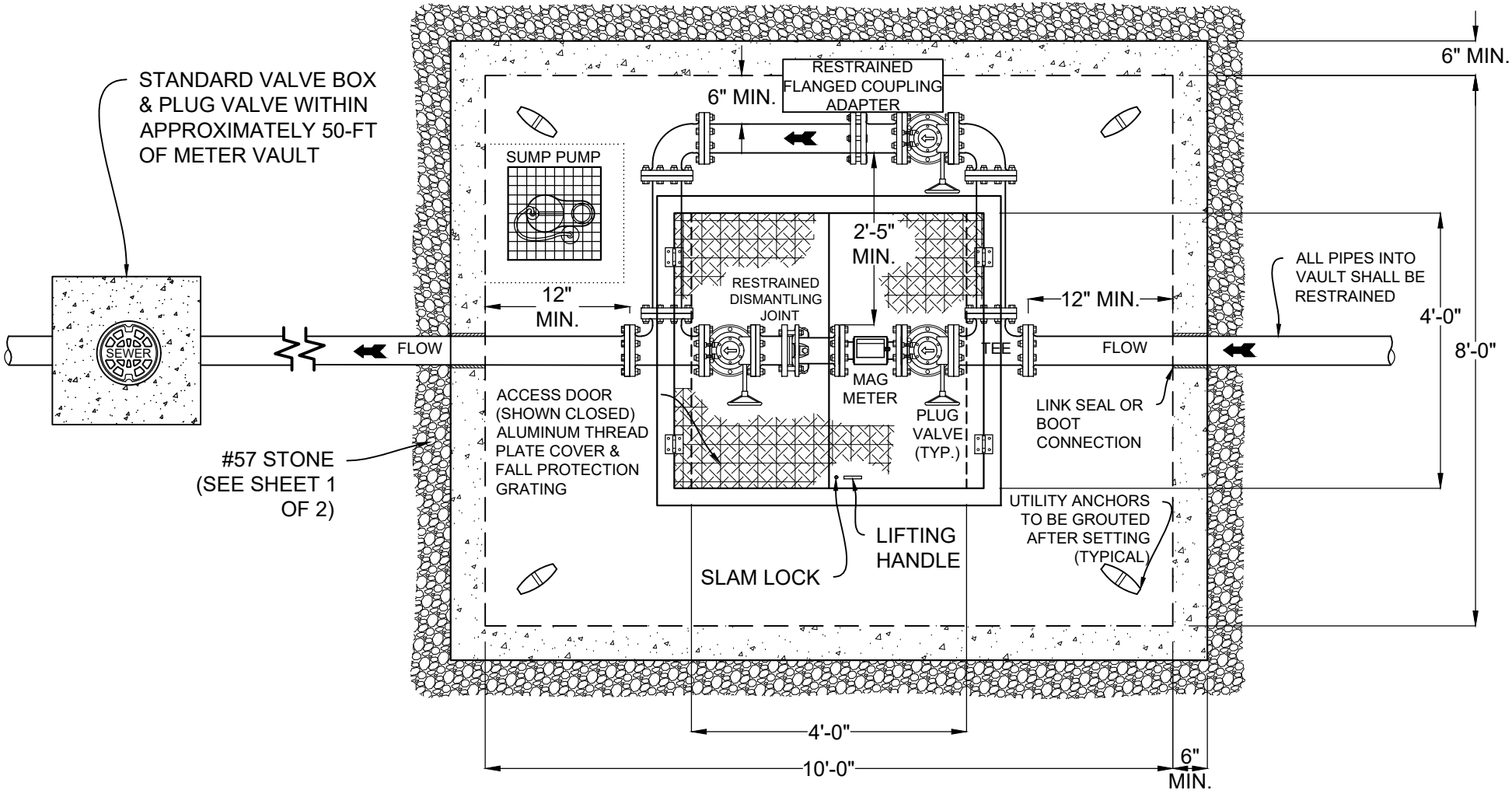


## PLAN VIEW

(SEE SHEET 1 OF 2 FOR SECTION VIEW)

| TOWN OF APEX STANDARDS | STANDARD MAG METER INSTALLATION | STD. NO. |
|---|---|---|
| EFFECTIVE: MARCH 23, 2021 | | 800.04 |
| | | SHEET 2 OF 2 |

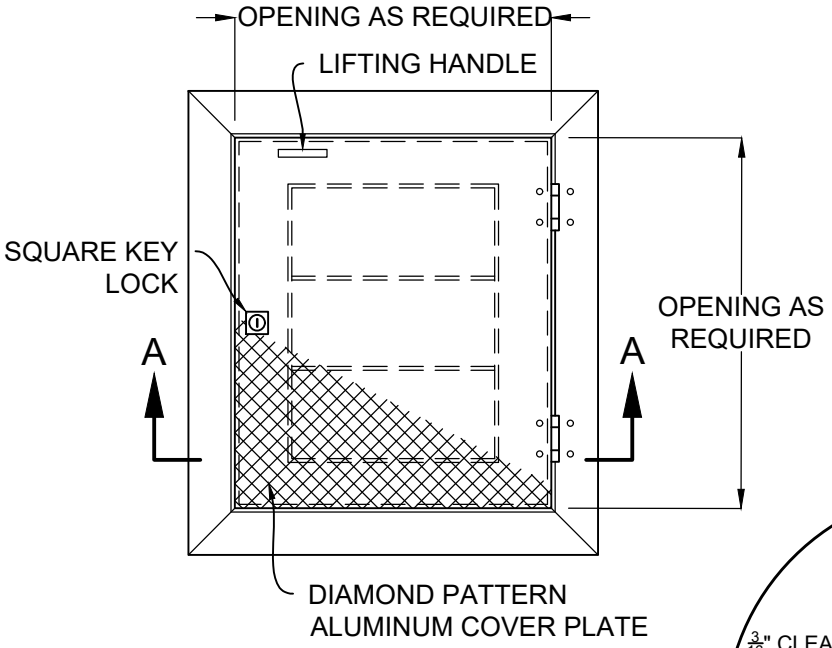


PLAN VIEW

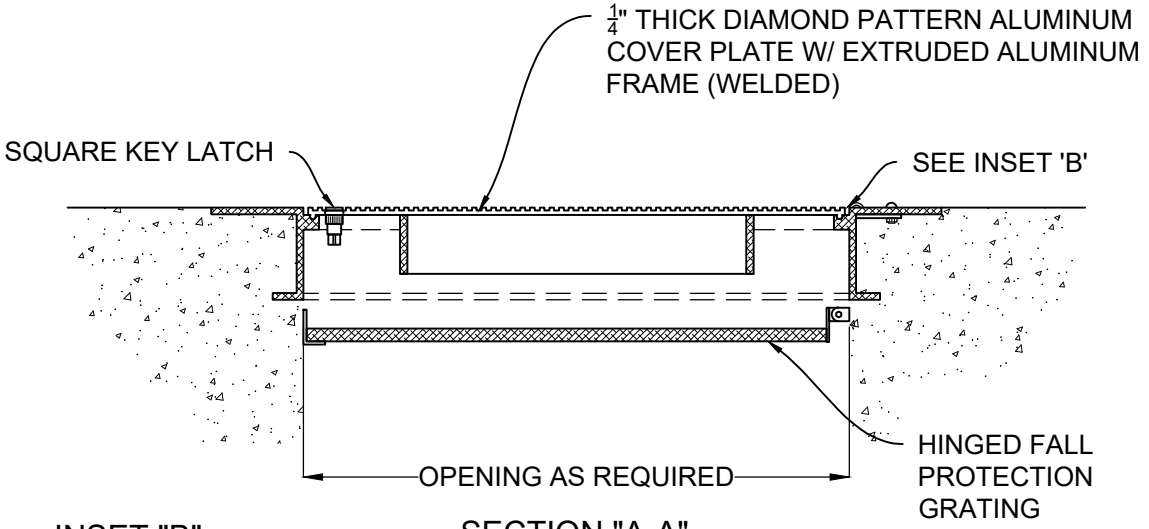


SECTION "A-A"

INSET "B"

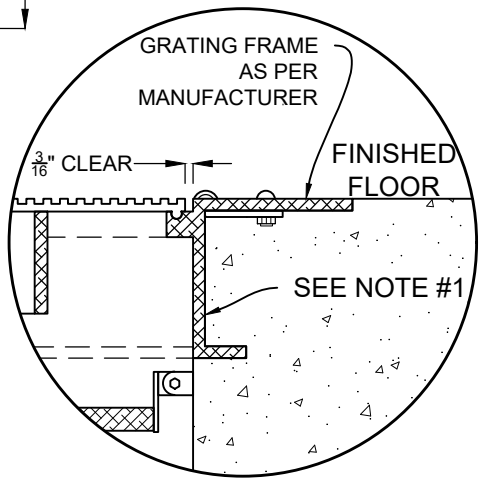


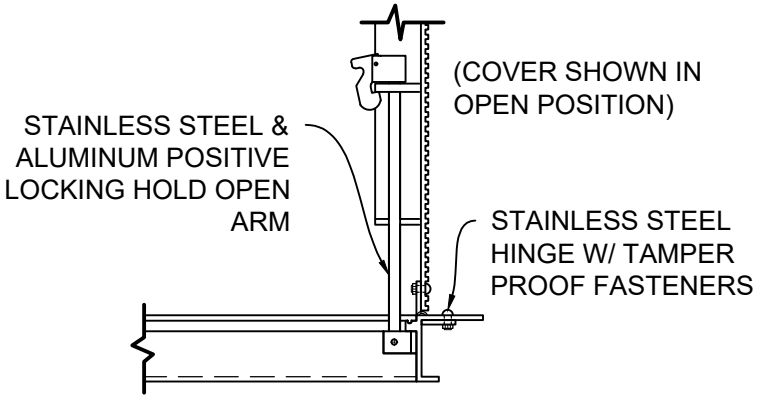


DETAIL

NOTES:

1. ALL ALUMINUM SURFACES IN CONTACT WITH CONCRETE OR GROUT SHALL BE COATED WITH BITUMINOUS MATERIAL FOR PROTECTION.

2. HATCHES SHALL BE SINGLE OR DOUBLE HATCH DEPENDING ON OPENING SIZE AND MANUFACTURER'S RECOMMENDATIONS.

3. HANDRAIL AROUND HATCH OPENING (SEE SECTION 802-G.5)

| TOWN OF APEX STANDARDS | WETWELL HATCH | STD. NO. |
|---|---|---|
| EFFECTIVE: MARCH 23, 2021 | | 800.05 |
| | | SHEET 1 OF 1 |

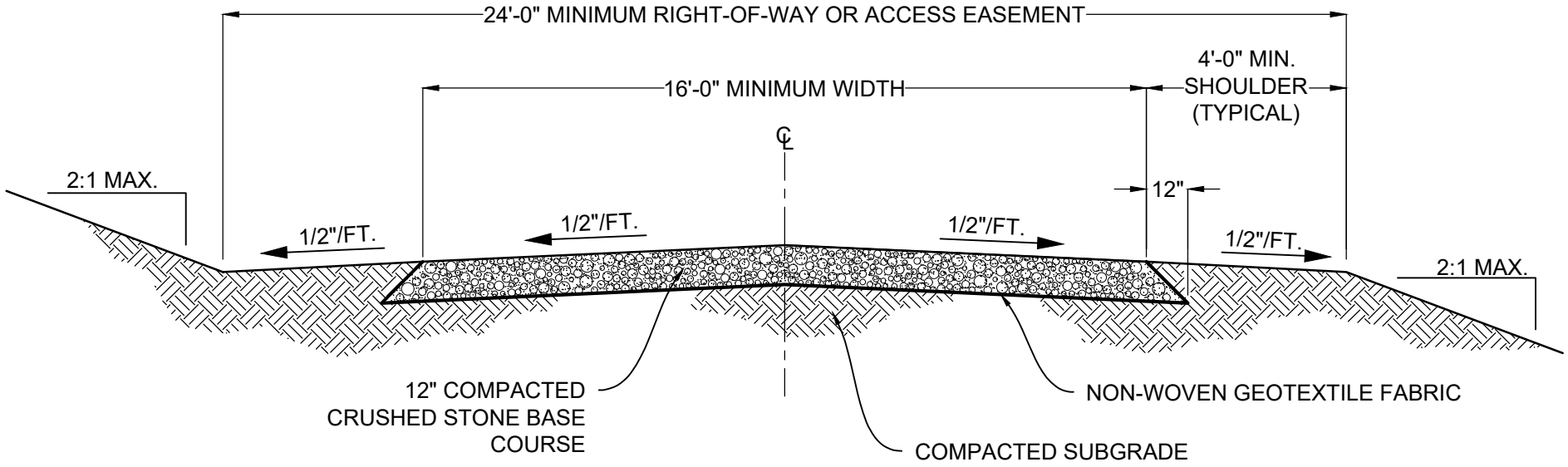


NOTES:

1. MAXIMUM ROADWAY SHALL BE 10%.

2. THE SITE SHALL FEATURE ADEQUATE TURN AROUND AREAS FOR SERVICE VEHICLES IN ACCORDANCE WITH SPECIFICATION SECTION 800.

| TOWN OF APEX STANDARDS | PUMP STATION ACCESS ROAD | STD. NO. |
|---|---|---|
| EFFECTIVE: MARCH 23, 2021 | | 800.06 |
| | | SHEET 1 OF 1 |

NOTES:

1. ADD 3 STRANDS OF BARB WIRE ALONG THE TOP OF FENCE AS DIRECTED (SEE SPECS).
2. ALL RAILS AND POSTS TO BE SCH. 40 GALV. STEEL PIPE WITH BLACK VINYL COATING.
3. POSTS TO BE SET IN CONCRETE.
4. IF ROCK IS ENCOUNTERED WHEN SETTING POSTS, DRILL HOLES 4-INCHES LARGER IN DIAMETER THAN POSTS AND BACKFILL TO GRADE WITH CLASS "B" CONCRETE.
5. PERIMETER OF FENCE SHALL BE SCREENED WITH PLASTIC IN ACCORDANCE WITH PLANNING DEPARTMENT REQUIREMENTS. IF PLANTINGS ARE NOT FEASIBLE, BLACK VINYL COATING PRIVACY SLATS MAY BE USED.

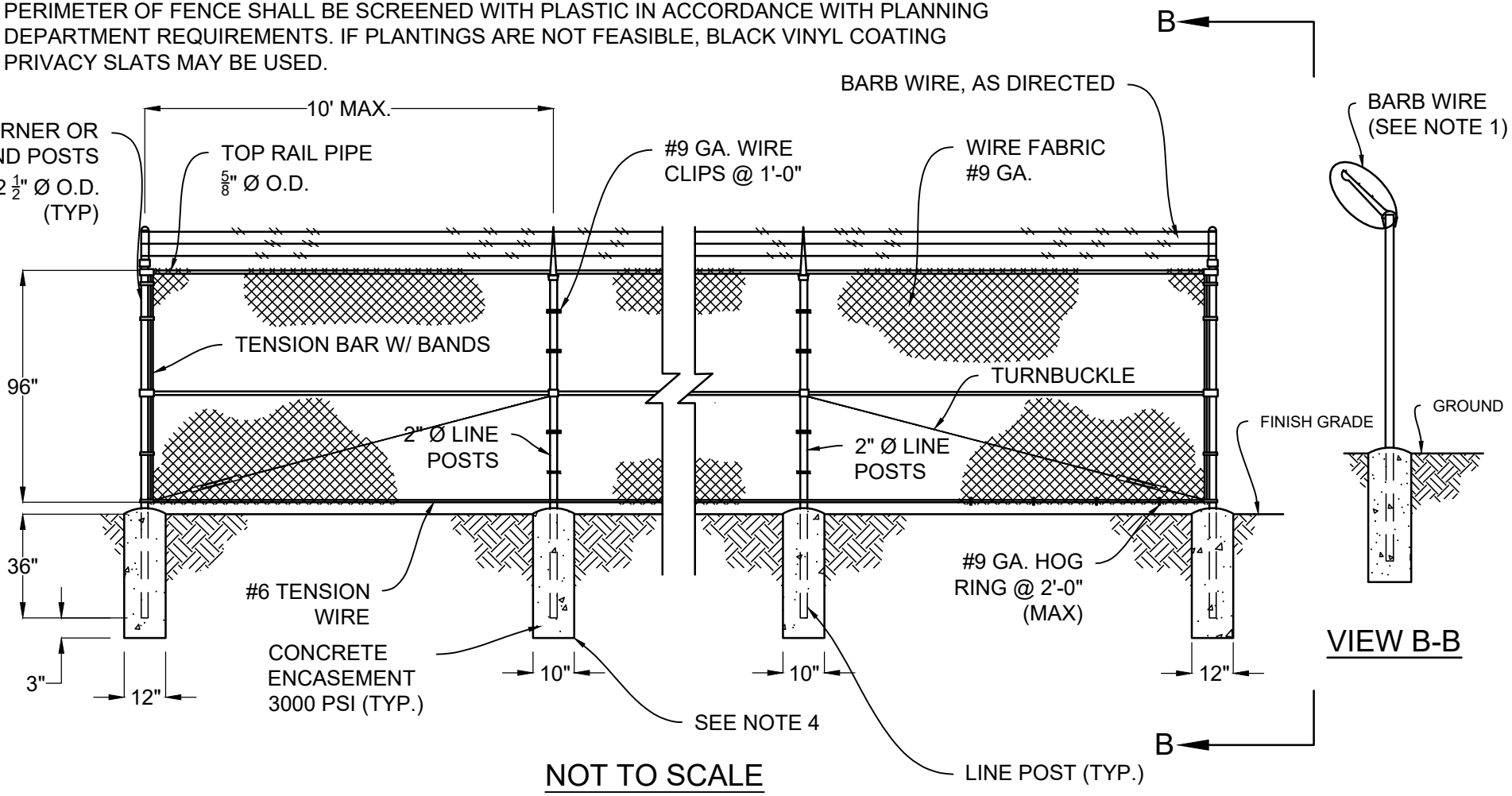


NOT TO SCALE

| TOWN OF APEX STANDARDS | TYPICAL CHAIN LINK FENCE | STD. NO. |
|---|---|---|
| EFFECTIVE: MARCH 23, 2021 | - Page 372 - | 800.07 |
| | | SHEET 1 OF 1 |

NOTES:

1. ADD 3 STRANDS OF BARB WIRE ALONG THE TOP OF FENCE AS DIRECTED (SEE SPECS).
2. ALL RAILS AND POSTS TO BE SCH. 40 GALV. STEEL PIPE WITH BLACK VINYL COATING.
3. POSTS TO BE SET IN CONCRETE
4. IF ROCK IS ENCOUNTERED WHEN SETTING POSTS, DRILL HOLES 4-INCHES LARGER IN DIAMETER THAN POSTS AND BACKFILL TO GRADE WITH CLASS "B" CONCRETE.
5. DOUBLE GATE SHALL HAVE A STRONG LOCK MECHANISM, DROP ROD, AND TRUSS ROD.
6. GATES SHALL HAVE BLACK VINYL COATED PRIVACY SLATS.

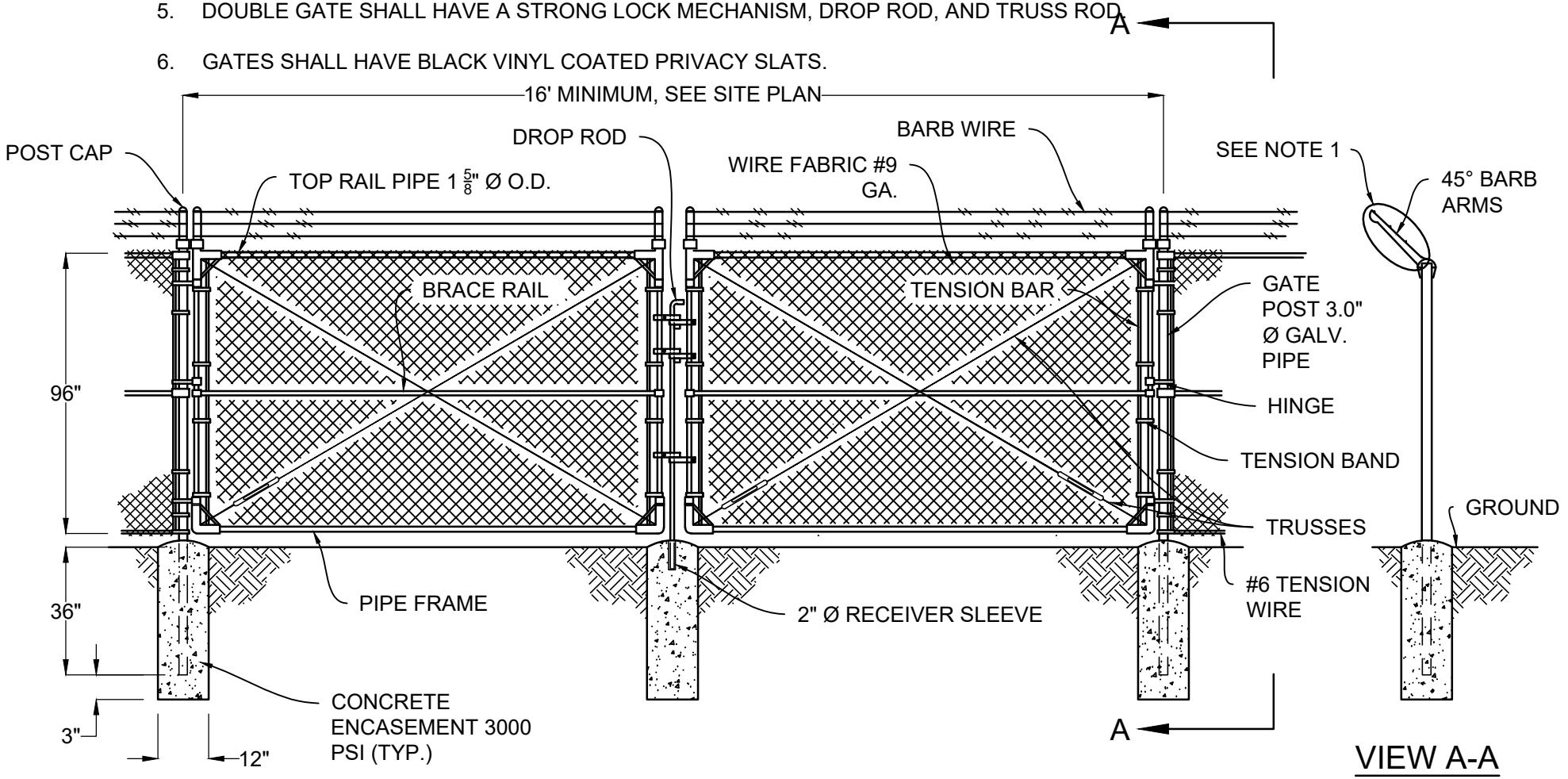


VIEW A-A

| TOWN OF APEX STANDARDS | TYPICAL SECURITY DOUBLE GATE | STD. NO. |
|---|---|---|
| EFFECTIVE: MARCH 23, 2021 | | 800.08 |
| | | SHEET 1 OF 1 |

NOTES:

1. PUMP STATION PROPERTY OR EASEMENT SHALL BE 50' x 50' (ft.) MINIMUM.
2. EQUIPMENT LOCATIONS AND DIMENSIONS MAY VARY.
3. SITE WITHIN FENCE SHALL BE 5 INCH THICK REINFORCED CONCRETE SLAB OR 3 INCHES CRUSHED STONE OVER GEOTEXTILE FABRIC (SPECIFIED BY DIRECTOR OF WATER RESOURCES).
4. THE PUMP STATION SITE LAYOUT AND DESIGN SHALL MEET ALL TOWN OF APEX SITE PLANNING AND DESIGN REQUIREMENTS.
5. PIGGING & BYPASS CONNECTION LOCATION WILL VARY.
6. BYPASS PUMPING CONNECTION SHALL BE LOCATED SO THAT IT IS NOT IN CONFLICT WITH GATE, ENTRY OF VEHICLES, OR ACCESS OTHER STATION COMPONENTS.

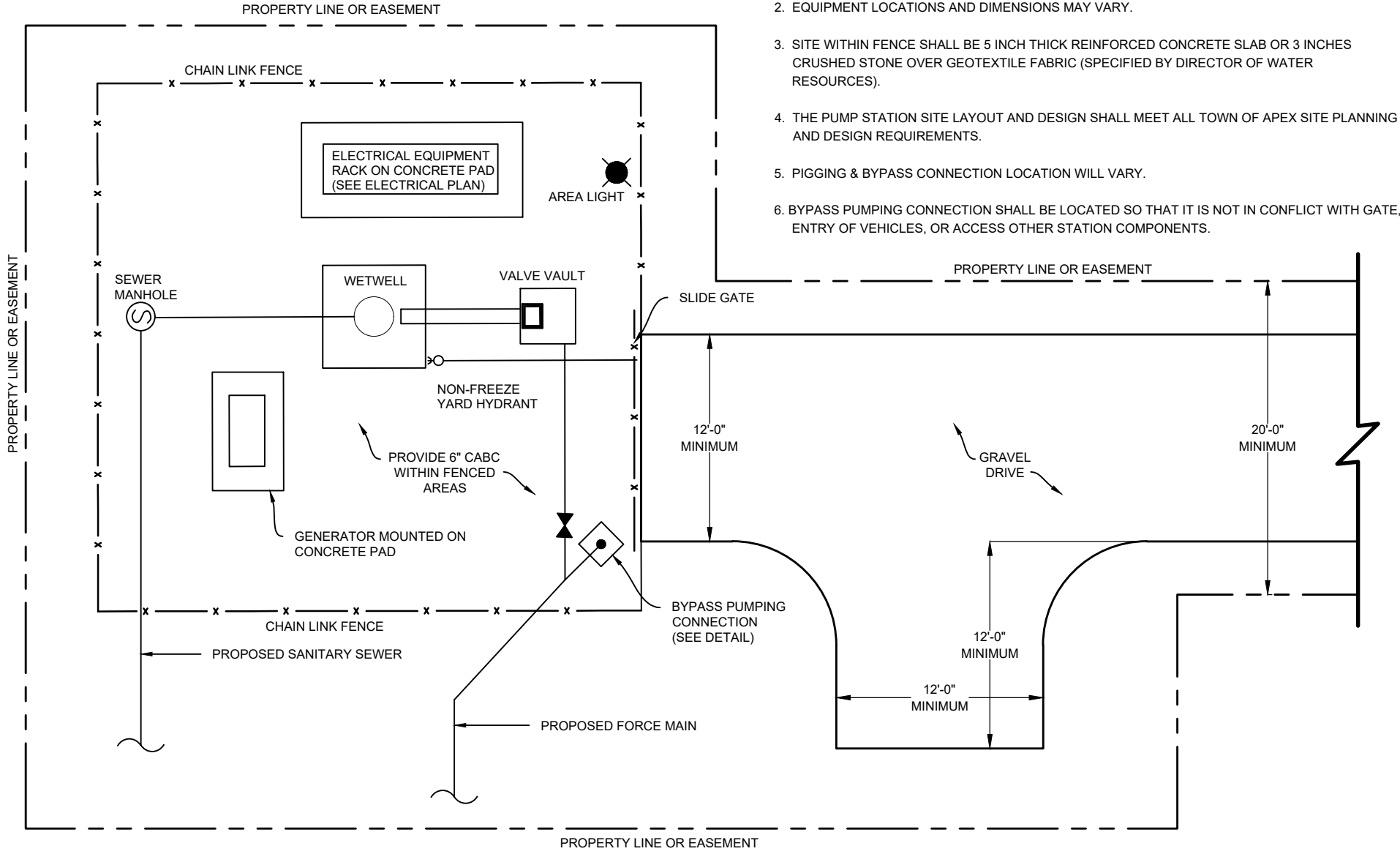


| TOWN OF APEX STANDARDS | TYPICAL PUMP STATION LAYOUT < 500 gpm | STD. NO. |
|---|---|---|
| EFFECTIVE: MARCH 23, 2021 | | 800.09 |
| | | SHEET 1 OF 1 |

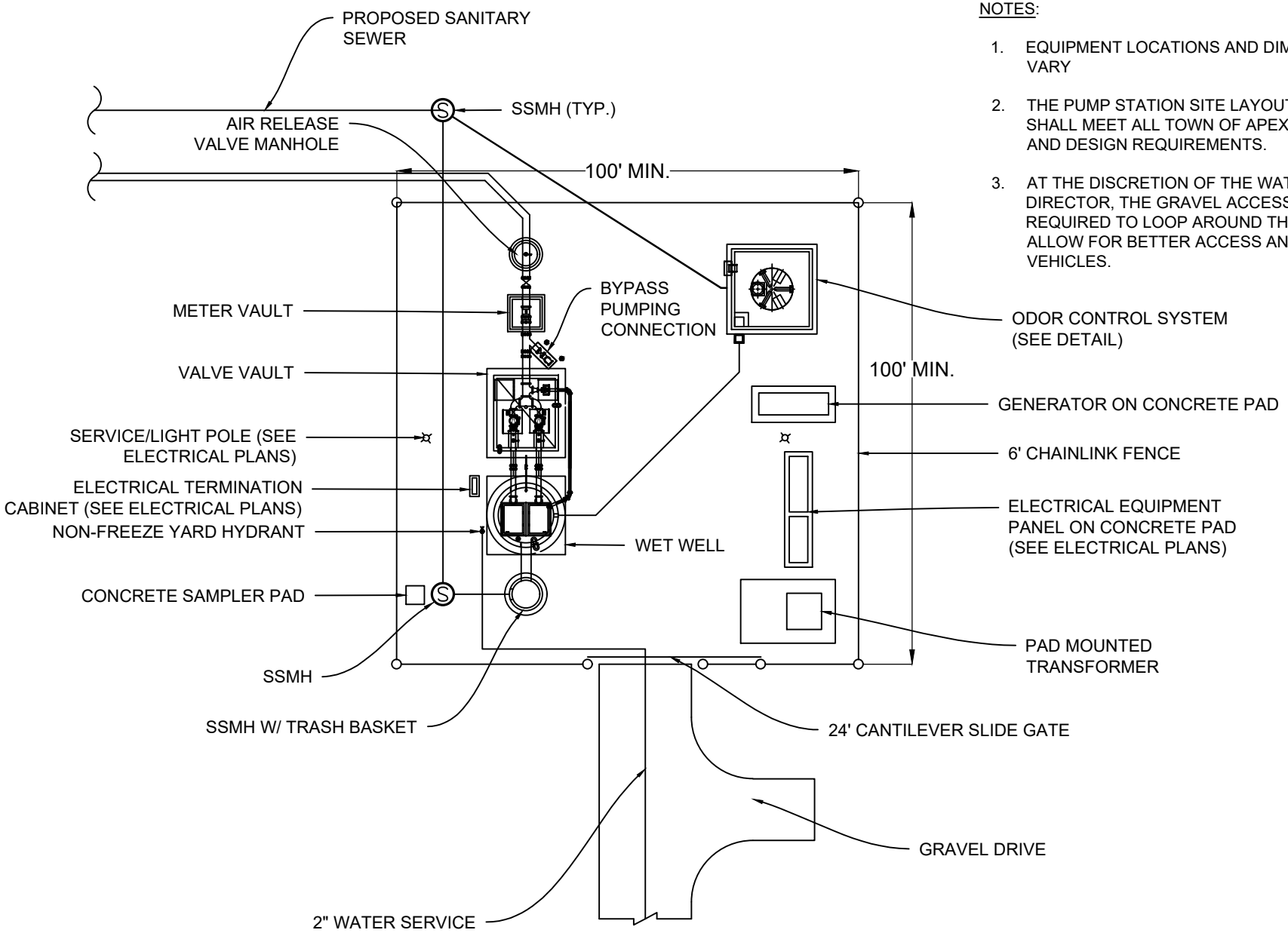


NOTES:

1. EQUIPMENT LOCATIONS AND DIMENSIONS MAY VARY
2. THE PUMP STATION SITE LAYOUT AND DESIGN SHALL MEET ALL TOWN OF APEX SITE PLANNING AND DESIGN REQUIREMENTS.
3. AT THE DISCRETION OF THE WATER RESOURCES DIRECTOR, THE GRAVEL ACCESS DRIVE MAY BE REQUIRED TO LOOP AROUND THE SITE TO ALLOW FOR BETTER ACCESS AND /OR LARGE VEHICLES.

| TOWN OF APEX STANDARDS | TYPICAL PUMP STATION LAYOUT > 500 GPM | STD. NO. |
|---|---|---|
| EFFECTIVE: MARCH 23, 2021 | | 800.10 |
| | | SHEET 1 OF 1 |

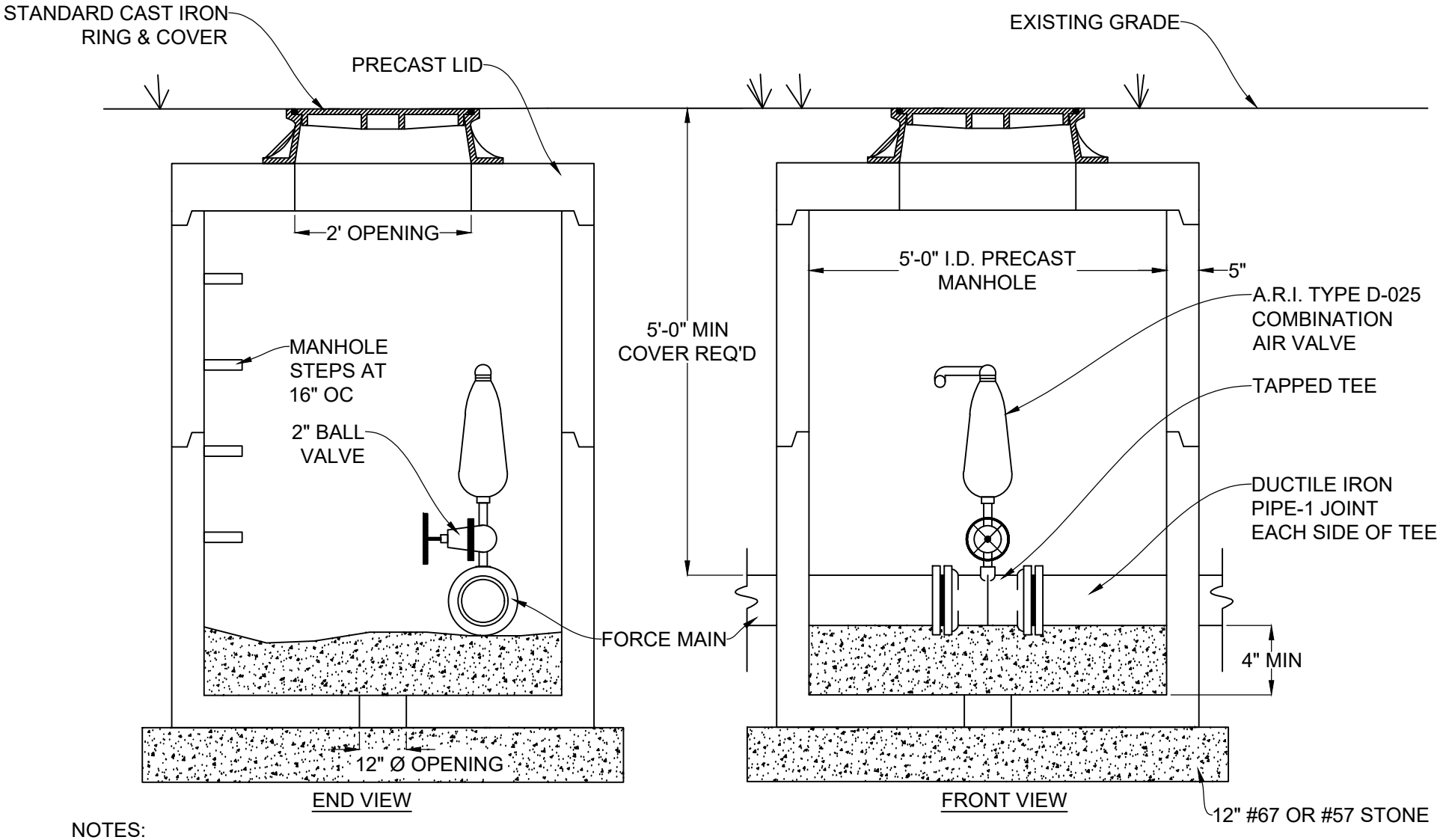


NOTES:

1. ALL THREADED PIPING SHALL BE BRASS W/ BRONZE FITTINGS AND VALVES.

2. MANHOLE INTERIOR SHALL RECEIVE 2 COATS SHERWIN WILLIAMS SHER-FLEX OR EQUIVALENT WITH A TOTAL DRY FILM THICKNESS OF 80-125 MILS.

| TOWN OF APEX STANDARDS | AIR RELEASE MANHOLE FOR SANITARY SEWER FORCE MAINS | STD. NO. 800.11 |
|---|---|---|
| EFFECTIVE: MARCH 23, 2021 | | SHEET 1 OF 1 |

# | Agenda Item | cover sheet

for consideration by the Apex Town Council

Item Type: CONSENT AGENDA

Meeting Date: March 23, 2020

## Item Details

Presenter(s): Mary Beth Manville

Department(s): Human Resources

Requested Motion

Motion to approve the authorization of one (1) full-time Housing Program Manager position, salary grade 26, and Budget Amendment 16, to fund associated costs.

Approval Recommended?

Yes

Item Details

The Planning Department, with the support of the Planning and Personnel Committees, is requesting the approval to create a new Housing Program Manager position to support the successful implementation and management of the Town's Affordable Housing Plan (AHP). This request was initially made as part of the FY22 budget process, but is needed earlier to expedite the implementation of the AHP's recommendations. A budget amendment is included in this request, to fund the associated costs for the new position. The Housing Manager position description and Budget Amendment 16 are attached for review.

Attachments

- Housing Program Manager Position Description
- CN_Budget Amendment 16

HOUSING PROGRAM MANAGER
Grade 26

## General Statement of Duties

Performs advanced journey-level professional duties addressing policy, plan development, and resource allocation to define and implement the Town's approach to affordable housing, including coordinating with Wake County on CDBG resource allocation and Federal compliance oversight.

## Distinguishing Features of the Class

The Housing Program Manager is responsible for implementing and maintaining the Town of Apex Affordable Housing Plan. Additionally, this position is responsible for deploying effective tools to reduce the loss of existing affordable housing units and to expand housing type and affordability with the goal of ensuring that housing choices are available for a diverse population.

Work involves coordinating with Current Planning to ensure rezoning cases, site, and subdivision plans are consistent with the Town's Affordable Housing Plan vision; developing and coordinating special plans and initiatives related to affordable housing; assisting citizens and developers with various issues; providing staff assistance to Town Council and various advisory boards; and serving on regional committees. Work involves providing technical guidance to department and Town staff, considerable research, and considerable public contact often in sensitive or emotional issues requiring judgment, firmness, and tact. The role also includes developing a favorable relationship between the Town and the community and between the Town and other municipalities and agencies. Work is supervised by the Long Range Planning Manager and is evaluated through review of work results obtained and overall acceptance of the programs by the Town's leadership and its citizens.

## Duties and Responsibilities

### Essential Duties and Tasks

- Manages the Town's affordable housing programs and initiatives.
- Independently leads implementation of recommendations in the Town of Apex Affordable Housing Plan.
- Recommends policy approach, develops programs, and identifies strategies to ensure successful implementation of affordable housing and CDBG activities.
- Analyzes data, including demographic, economic, and GIS datasets, and recommends systems to track and report analysis.
- Builds and strengthens nonprofit partner capacity, lenders, and other partners as necessary to support implementation of recommended programs and policy; strengthens collaboration between the Town, Wake County, and neighboring municipalities.
- Creates public education campaigns to heighten awareness of community affordable housing initiatives; translates complex issues into easily understandable concepts for a variety of audiences; understands and communicates evolving housing market trends and preferences.
- Designs and launches new tools and programs, continually adjusting to the changing needs as progress is made; manages a variety of projects and deadlines; recommends goals and

measurable objectives and tracks and evaluates progress toward those goals and objectives.
- Assists in preparation of annual operating budgets, financial forecasts, and tracking project expenditures; analyzes expenditures within budgets and reports findings to leadership.
- Prepares and manages the preparation of various complex federal, state, and local plans and reports as required by the program; maintains related records and files according to retention requirements.
- Participates in audits and compliance reviews of financial records, reports, organizational, and operational studies.
- Manages and operates in a dynamic fast-paced environment with high expectations for producing work, clearly articulating expectations, holding others accountable, and listening effectively while being honest, open, and transparent.
- Maintains highly effective, positive working relationships with Town staff, other local governments, non-profit partners and appropriate state and federal representatives.
- Participates and leads collaborative and consensus building activities as both a team leader and team member.
- Serves as staff to committees, commissions, and task forces when needed; including serving as the primary staff to the anticipated Housing Advisory Board.
- Plans, leads, and participates in workshops, meetings, and public hearings to explain affordable housing proposals; answers citizen questions concerning plans and problems; makes various presentations of staff recommendations and possible scenarios.
- Coordinates planning activities with affected federal, state, town, regional, and private agencies; coordinates approval processes.
- Provides research and input into the development of plans, ordinances, policies and procedures for the Town and the department.
- Manages contracts and agreements, as applicable, with consultants and partners.

Additional Job Duties
- Performs related duties as required

## Recruitment and Selection Guidelines

Knowledge, Skills, and Abilities
- Comprehensive knowledge of the principles, practices, and techniques of housing and CDBG programs.
- Comprehensive knowledge of the sources of data and information related to defining housing issues and measuring success of programs.
- Comprehensive knowledge of the principles and practices of local, state, and federal budget and contract preparation.
- Comprehensive knowledge of contracting for professional services.
- Ability to plan, organize, and carry out complex research projects effectively and simultaneously.
- Thorough knowledge of local, state, and federal laws, regulations, zoning, land use, and other ordinances and codes.
- Thorough knowledge of the principles and practices of community development and public sector planning.
- Thorough knowledge of governmental laws, programs, and services pertinent to the community development and planning processes.
- Thorough knowledge of the environmental and socio-economic implications of the planning

process.
- Considerable skill in the collection, analysis, and presentation of technical data and planning recommendations, and ability to coordinate public participation processes.
- Considerable knowledge of the application of information technology to the work of the department.
- Skill in collaborative conflict resolution.
- Ability to establish and maintain effective working relationships with community groups, federal, state, regional, and Town officials, and the general public.
- Ability to plan, organize and coordinate large projects involving various interest groups and complete the project within established time frames.
- Ability to prepare comprehensive reports and studies.
- Ability to express ideas effectively in oral and written forms and make effective public presentations.
- Ability to provide leadership to committees and staff, facilitate meetings, build consensus, and work collaboratively with developers, town officials, and the community regarding development.
- Ability to communicate clearly and concisely, both orally and in writing.
- Ability to interpret and apply pertinent federal, state and local laws, codes and regulations.
- Ability to present the results of research effectively in oral, written, and graphic form.
- Ability to establish and maintain effective working relationships with associates, contractors, municipal officials, representatives of other agencies, and members of the general public.

Physical Requirements
- Must be able to perform the basic physical life operational functions of reaching, crouching, standing, walking, fingering, grasping, talking, hearing, and repetitive motions.
- Must be able to perform light work exerting up to 20 pounds of force occasionally, and/or 10 pounds of force frequently, and/or a negligible amount of force constantly to lift carry, push, pull, or otherwise move objects.
- Must possess the visual acuity to examine and work with maps, operate a computer, inspect sites, and do extensive reading.

Desirable Education and Experience

Any combination of education and experience equivalent to graduation from an accredited college or university with major work in public administration, business administration, urban and regional planning, or related field, and considerable experience in housing affordability, CDBG administration, and public policy.

Special Requirement

Requires a valid driver license with an acceptable driving record.

Apex
2021

# Town of Apex

## Budget Ordinance Amendment No. 16

BE IT ORDAINED, by the Council of the Town of Apex that the following Budget Amendment for the Fiscal Year 2020-2021 Budget Ordinance be adopted:

## GENERAL FUND

**Section 1. Revenues:**

| | |
|---|---|
| Appropriated Fund Balance | $36,400 |
| **Total Revenues** | **$36,400** |

**Section 2. Expenditures:**

| | |
|---|---|
| Planning - Personnel | $28,400 |
| Planning - Operations | $8,000 |
| **Total Expenditures** | **$36,400** |

**Section 3.** Within five (5) days after adoption, copies of this Amendment shall be filed with the Finance Officer and Town Clerk.

Adopted this the 23rd day of March, 2021

Attest:

Jacques K. Gilbert, Mayor

Donna B. Hosch, MMC, Town Clerk

# | Agenda Item | cover sheet

for consideration by the Apex Town Council

Item Type: PUBLIC HEARING

Meeting Date: March 23, 2021

## Item Details

Presenter(s): Shannon Cox, Long Range Planning Manager

Department(s): Planning and Community Development

Requested Motion

Public hearing and possible motion regarding proposed Transportation Plan amendments associated with Rezoning #20CZ12 Felton Grove High School.

Approval Recommended?

The Planning Board unanimously recommended approval of the proposed amendments during their March 8, 2021 meeting. Planning staff also recommends approval.

Item Details

The proposed amendments are associated with proposed Rezoning #20CZ12 Felton Grove High School. The rezoning request is associated with plans for a new high school at 8550 Stephenson Road.

The proposed amendments to the Thoroughfare and Collector Street Plan map are as follows:

- Remove the future Major Collector street between Smith Road extension and Thriftwood Drive,
- Remove the future Minor Collector street connection to Sunset Lake Road,
- Remove the future Minor Collector street between Derry Down Lane and Thriftwood Drive, and
- Remove the Minor Collector street designation from existing Arrowhead Drive.

The proposed amendments to the Bicycle and Pedestrian System Plan map are consistent with roadway recommendations and also include adding a proposed greenway connection from the proposed school site to Middle Creek Greenway.

Attachments

- Staff report

# STAFF REPORT
## Transportation Plan Amendments

March 23, 2021 Town Council Meeting

The Thoroughfare and Collector Street Plan map (last amended March 11, 2021) and The Bicycle and Pedestrian System Plan map (published January 8, 2021) represent a network of current and future facilities that provide guidance on what is likely to be suitable for long term growth, connectivity, and recreation. These plans do not require a schedule for implementation nor do they set aside funding for improvements. The purpose of the public hearing is to consider proposed amendments to the network of planned thoroughfare and collector streets, and bicycle and pedestrian facilities, in order to formulate a decision.

The proposed amendments are associated with proposed Rezoning #20CZ12 Felton Grove High School. The rezoning request is associated with plans for a new high school at 8550 Stephenson Road.

The proposed amendments to the Thoroughfare and Collector Street Plan map are as follows:

- Remove the future Major Collector street between Smith Road extension and Thriftwood Drive,
- Remove the future Minor Collector street connection to Sunset Lake Road,
- Remove the future Minor Collector street between Derry Down Lane and Thriftwood Drive, and
- Remove the Minor Collector street designation from existing Arrowhead Drive.

The proposed amendments to the Bicycle and Pedestrian System Plan map are consistent with roadway recommendations and also include adding a proposed greenway connection from the proposed school site to Middle Creek Greenway.

Construction of the collector streets proposed for removal are not programmed in the Town's 5-year Capital Improvement Program, nor the State's 10-year Transportation Improvement Program. There are no funded projects to construct a greenway connection from the proposed school site to Middle Creek Greenway; however, Rezoning #20CZ12 includes a condition requiring construction of side path along the future school driveway and provision of an easement to allow for the future construction of greenway.

**Staff Recommendation:**

If the rezoning case is approved and a high school is constructed, the Town of Apex would be responsible for reimbursing the construction costs of any portion of the collector streets constructed on the proposed school site. Given the difficulty of completing future connections of these collector streets to the surrounding transportation network, and the other priorities for municipal-funded roadway projects, Planning staff recommends supporting the proposed amendments to the Thoroughfare and Collector Street Plan map. Planning Staff also recommends supporting the proposed amendments to the Bicycle and Pedestrian System Plan map, which are consistent with changes to the roadway network and allow for a future connection for pedestrians and cyclists from Middle Creek Greenway to the future school. This recommendation is consistent with recommendations in Advance Apex: The 2045 Transportation Plan to prioritize safe routes to school.

The proposed amendments were reviewed with staff from Public Works and Transportation; Parks, Recreation and Cultural Resources; Fire; and Police. Representative staff indicated support for the proposed amendments. Staff from Police and Fire acknowledged that, while the Major Collector street would help with future access and connectivity, there are other ways to reach the site and this is not a high-priority roadway project for the Town.

**Planning Board Recommendation:**

The Planning Board considered the proposed amendments during their March 8, 2021 meeting and unanimously recommended approval of the amendments as presented.

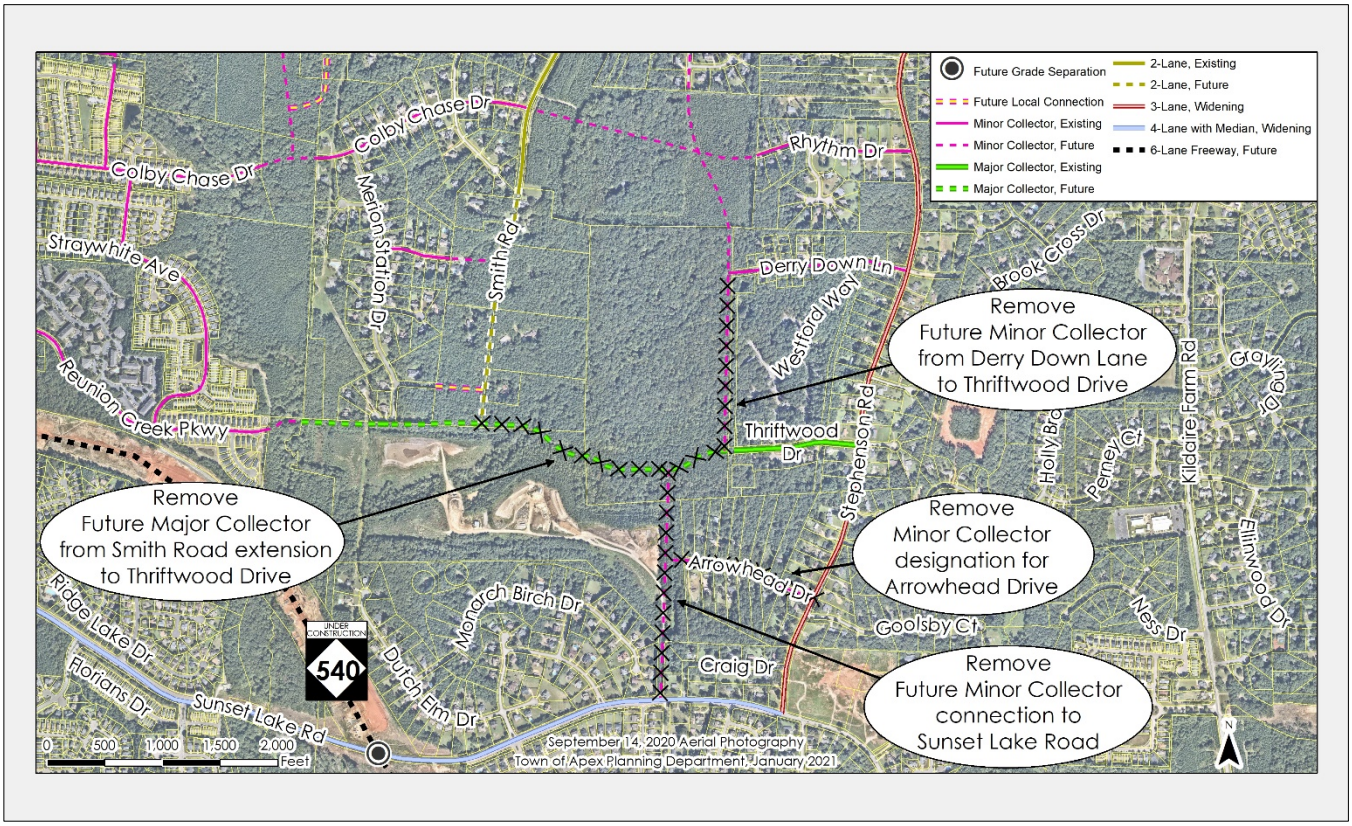


*Figure 1. Proposed amendments to the Thoroughfare and Collector Street Plan map*

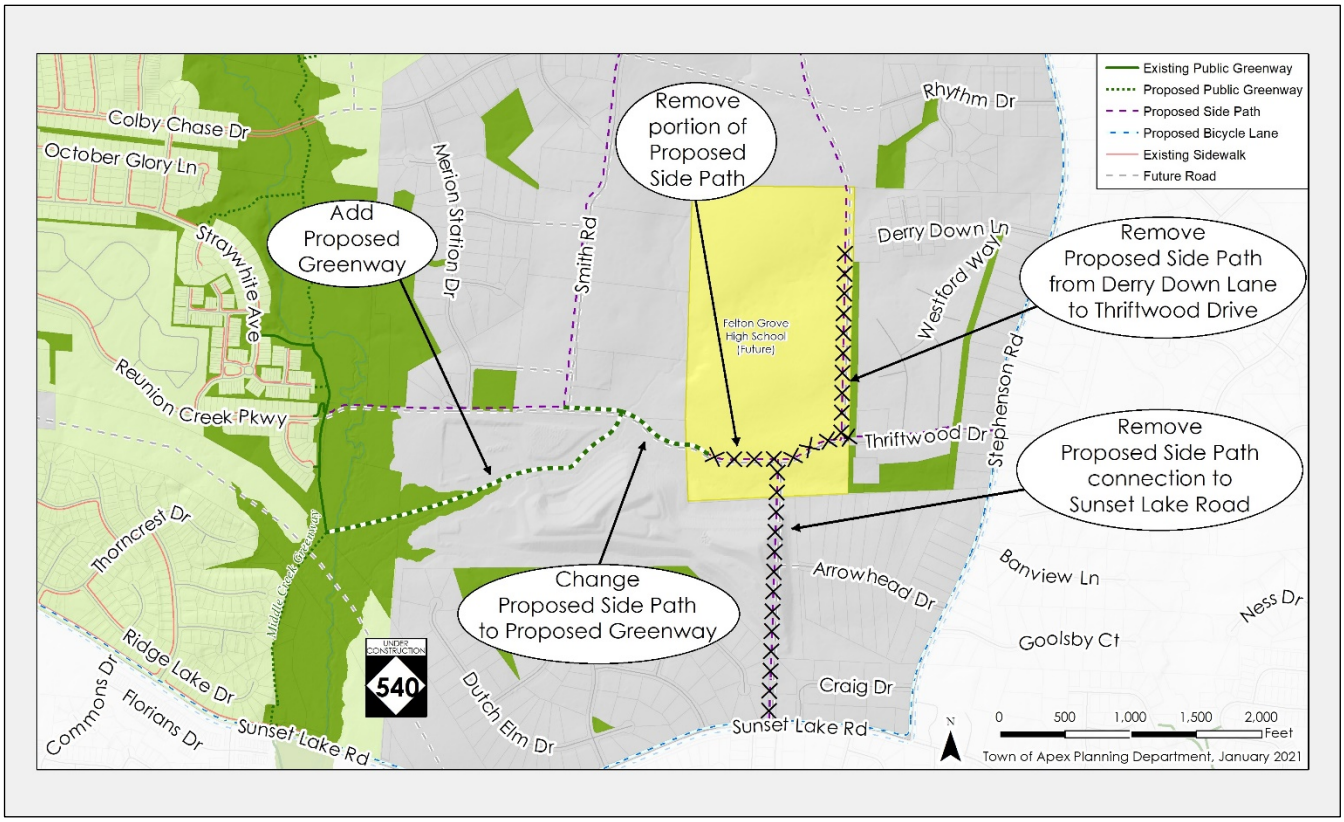


*Figure 2. Proposed amendments to the Bicycle and Pedestrian System Plan map*

# | Agenda Item | cover sheet

for consideration by the Apex Town Council

Item Type: PUBLIC HEARING

Meeting Date: March 23, 2021

## Item Details

Presenter(s): Shelly Mayo, Planner II

Department(s): Planning and Community Development

Requested Motion

Public hearing and possible motion to approve Rezoning Application #20CZ12 Felton Grove High School. The applicant, Wake County Board of Education, seeks to rezone approximately 68.06 acres located at 8550 Stephenson Road from Medium Density Residential-Conditional Zoning (MD-CZ #12CZ14) to Medium Density Residential-Conditional Zoning (MD-CZ).

Approval Recommended?

The Planning and Community Development Department recommends approval with an additional condition.

The Planning Board held a Public Hearing on March 8, 2021 and unanimously voted to recommend approval of the rezoning with the conditions offered by the applicant and the additional condition recommended by Planning staff.

Item Details

The property to be rezoned is identified as PIN 0750545646.

Attachments

- Staff Report
- Attachments

# STAFF REPORT

## Rezoning #20CZ12 Felton Grove High School

March 23, 2021 Town Council Meeting

All property owners within 300 feet of this rezoning have been notified per UDO Sec. 2.2.11 Public Notification.

**BACKGROUND INFORMATION:**

| | |
|---|---|
| **Location:** | 8550 Stephenson Road |
| **Agent/Owner:** | Betty Parker, Wake County Board of Education |

**PROJECT DESCRIPTION:**

| | |
|---|---|
| **Acreage:** | +/- 68.06 |
| **PIN:** | 0750545696 |
| **Current Zoning**: | Medium Density Residential-Conditional Zoning (MD-CZ) |
| **Proposed Zoning**: | Medium Density Residential-Conditional Zoning (MD-CZ) |
| **2045 Land Use Map:** | School |
| **Town Limits**: | In ETJ |

**ADJACENT ZONING & LAND USES:**

| | Zoning | Land Use |
|---|---|---|
| **North:** | Rural Residential (#07ETJ24) | Single-family Residential |
| **South:** | Light Industrial (#07ETJ24) & Rural Residential (#07ETJ24) | Triangle Forest Products, Inc. Landfill (formerly Currin Brothers) & Indian Hills Subdivision |
| **East:** | Mobile Home Park (#07ETJ24) | Briarwood Farms Mobile Home Park |
| **West:** | Rural Residential (#07ETJ24) & Light Industrial (#07ETJ24) | Triangle Forest Products, Inc. Landfill (formerly Currin Brothers) & Single-family Residential |

**EXISTING CONDITIONS:**

The site consists of one (1) parcel totaling approximately 68.06 acres. It is completely wooded with several perennial and intermittent streams throughout the site. It is located west of Stephenson Rd, at the end of Derry Down Lane and Thriftwood Dr. It is west of the Briarwood Farms Mobile Home Park and north of the Indian Hills Subdivision and Triangle Forest Products, Inc. Landfill (formerly Currin Brothers).

The adjacent landfill is a "Land Clearing and Inert Debris Landfill." Section 4.3.3 of the UDO defines this use as:

> A disposal facility that consists of solid waste that is generated solely from land clearing activities such as stumps and trees; and inert debris such as brick, concrete and clean soil.

It was approved by Wake County in 2003 and has a 50-foot undisturbed buffer along the eastern and northern boundaries. UDO Sec. 4.4.3.I.1.3 requires the following of new landfills:

> No part of a land clearing and inert debris landfill, its accessory ramps, on-site circulation system or storage areas shall be sited within 250 feet of a school, child care center, park, church, library or residential lot;

There is an intermittent stream on the southern portion of the Felton Grove High School property, which limits development in that area. The UDO requires a 50-foot riparian buffer along each side of the stream, making the total width of the buffer 100-feet wide. Based on the location of the stream and the buffers on the landfill property, the high school will be a minimum of 250 feet from the active portion of the landfill.

The UDO does not require new schools to meet these dimensional requirements when locating near an existing landfill. However, the concern was mentioned during Planning Board and staff evaluated both properties to confirm that the standard would be met.

## NEIGHBORHOOD MEETING:

The applicant conducted a neighborhood meeting on October 27, 2020. There was no one in attendance. The meeting report is attached.

## 2045 LAND USE MAP:

The 2045 Land Use Map identifies the subject property as School. The proposed rezoning to Medium Density Residential-Conditional Zoning is consistent with that Land Use Map designation since the uses are restricted to those typically found on school sites.

## PROPOSED ZONING CONDITIONS:

**Proposed Uses:**

The Rezoned Lands may be used for, and only for, the uses listed immediately below. The permitted uses are subject to the limitations and regulations stated in the UDO and any additional limitations or regulations stated below. For convenience, some relevant sections of the UDO may be referenced; such references do not imply that other sections of the UDO do not apply.

1. School, public or private
2. Communication tower, camouflage stealth (S)
3. Communication tower, public safety (S)
4. Wireless communication facility
5. Wireless support structure
6. Church or place of worship

**Conditions:**

1. This project shall preserve trees measuring 18-inches in diameter at breast height or greater to the maximum extent reasonably possible.
2. In compliance with the UDO and to optimize survival of landscaping, an extension of up to 6 months' time may be provided for installation of landscaping after a Certificate of Occupancy would otherwise be issued.
3. To support re-establishment of forest, a reforestation seed mix shall be used in disturbed areas with slopes of 3:1 or less, and not located within RCAs or SCMs. To expedite growth and avoid erosion, a slope stabilizing mix with conservation seed mix shall be used to slopes greater than 3:1 but less than 2:1 and not located within RCAs or SCMs.
4. This project shall dedicate a 20-foot on-site public greenway easement and within it provide a 10-foot greenway path and/or 10-foot sidewalk connection from the driveway connection at Thriftwood Drive to the western property line.
5. This project shall also provide off-site a combined greenway and sanitary sewer easement to accommodate future greenway construction by others. To comply with Section 900 of the Town's Standard Specifications, the combined public utility and greenway easement shall be recorded providing no less than 30 feet in width, or 10 feet beyond the minimum required for the sanitary sewer, whichever is greater. The public greenway easement shall extend from the western boundary of the site, across the landfill site (Wake Co. PIN 0750-44-1182) to the landfill's western boundary.
6. The Vehicular Use Area Shading described in UDO Section 8.2.5.C is not required in the area between the parking deck and parking lot near the site's eastern boundary. Instead, the same number of trees required to meet this standard will be planted elsewhere on the site. The remainder of the site shall meet the requirements of UDO Section 8.2.5.C. to the maximum extent reasonably possible.
7. The 2045 Transportation Plan shows a future north-south Minor Collector along the eastern property line starting at Derry Downs Lane extending to the northern site boundary. This project shall provide half of

the required 60-foot right-of-way as shown on the plan.

8. Improvements to the existing streets known as Thriftwood Drive and Derry Down Lane (identified as public streets having a 60' right of way on the Briarwood Farms-COSD subdivision map recorded in Book of Maps 1986-2149, Wake County Registry, and as accepted by Wake County for use by the general public by instrument recorded in Book 7714 at Page 404, Wake County Registry) shall be provided to satisfy such NCDOT requirements made upon review of the traffic study for the project which are minimally necessary to provide adequate public access as state-maintained roadways to Stephenson Road. Consequently, the existing streets known as Thriftwood Drive and Derry Down Lane are not proposed for upgrades to meet Town of Apex standards nor are they proposed for dedication to the Town of Apex.
9. The northern perimeter buffer shall be a 20-foot Type B buffer, except where segmental retaining wall tie-backs would encroach. In those areas, it shall be no less than a 15-foot Type A buffer.
10. Cast-in-place retaining walls shall be permitted within the western 20-foot Type B buffer, as long as sufficient landscaping is planted around and on top of the walls to meet the requirements of the 20-foot Type B buffer.

**TRANSPORTATION:**

NCGS 160D-701 governs zoning regulations and states: "The regulations may not include, as a basis for denying a zoning or rezoning request from a school, the level of service of a road facility or facilities abutting the school or proximately located to the school."

Access to the school will be via Stephenson Road to Thriftwood Drive and Derry Down Lane. Stephenson Road belongs to NCDOT and is a rural 2-lane road. Thriftwood Drive and Derry Down Lane are residential roads with a drainage ditch on each side.

**PLANNING STAFF RECOMMENDATION:**

Planning staff recommends approval of rezoning #20CZ12 Felton Grove High School if the following condition is added:

- A 100-foot riparian buffer shall be provided for all perennial streams in accordance with the requirements of UDO Sec. 6.1 as of August 3, 2020.

In February 2022, the Town's NPDES Phase II permit will expire. Unless it is renewed, our ability to enforce a 100-foot riparian buffer in the Big Branch and Middle Creek watershed basins will end at that time. To mitigate this, we are requesting a zoning condition for any rezoning in those 2 basins that will ensure a 100-foot buffer on perennial streams. Otherwise, an amended subdivision or site plan could be submitted to reduce the buffer to 50-feet. Given the concerns that Apex residents and Council Members have expressed regarding tree protection and environmental preservation, a zoning condition is currently our best tool to make sure the 100-foot buffer is provided for all perennial streams. To that end, Planning and Water Resources Staff are requesting this riparian buffer condition on all rezoning petitions within the Big Branch and Middle Creek watershed basins.

**PLANNING BOARD RECOMMENDATION:**

Planning Board heard this at their March 8th meeting and unanimously recommended approval of the rezoning, with the addition of the riparian buffer condition requested by staff.

**ANALYSIS STATEMENT OF THE REASONABLENESS OF THE PROPOSED REZONING:**

This Statement will address consistency with the Town's comprehensive and other applicable plans, reasonableness, and effect on public interest:

Approval of the rezoning is reasonable as the proposed Medium Density Residential-Conditional Zoning

district is consistent with the School land use classification on the 2045 Land Use Map given the list of permitted uses.

The proposed rezoning is reasonable and in the public interest if the condition requested by staff is added, because it will maintain a valuable tool to preserve tree canopy and improve water quality. The rezoning will also permit the construction of a high school needed to support the growing residential development in this area.

## CONDITIONAL ZONING STANDARDS:

The Town Council shall find the Medium Density Residential-Conditional Zoning (MD-CZ) designation demonstrates compliance with the following standards. 2.3.3.F:

**Legislative Considerations**

The applicant shall propose site-specific standards and conditions that take into account the following considerations, which are considerations that are relevant to the legislative determination of whether or not the proposed conditional zoning district rezoning request is in the public interest. These considerations do not exclude the legislative consideration of any other factor that is relevant to the public interest.

1) *Consistency with 2045 Land Use Map.* The proposed Conditional Zoning (CZ) District use's appropriateness for its proposed location and consistency with the purposes, goals, objectives, and policies of the 2045 Land Use Map.

2) *Compatibility.* The proposed Conditional Zoning (CZ) District use's appropriateness for its proposed location and compatibility with the character of surrounding land uses.

3) *Zoning district supplemental standards.* The proposed Conditional Zoning (CZ) District use's compliance with Sec 4.4 *Supplemental Standards,* if applicable.

4) *Design minimizes adverse impact.* The design of the proposed Conditional Zoning (CZ) District use's minimization of adverse effects, including visual impact of the proposed use on adjacent lands; and avoidance of significant adverse impacts on surrounding lands regarding trash, traffic, service delivery, parking and loading, odors, noise, glare, and vibration and not create a nuisance.

5) *Design minimizes environmental impact.* The proposed Conditional Zoning District use's minimization of environmental impacts and protection from significant deterioration of water and air resources, wildlife habitat, scenic resources, and other natural resources.

6) *Impact on public facilities.* The proposed Conditional Zoning (CZ) District use's avoidance of having adverse impacts on public facilities and services, including roads, potable water and wastewater facilities, parks, schools, police, fire and EMS facilities.

7) *Health, safety, and welfare.* The proposed Conditional Zoning (CZ) District use's effect on the health, safety, or welfare of the residents of the Town or its ETJ.

8) *Detrimental to adjacent properties.* Whether the proposed Conditional Zoning (CZ) District use is substantially detrimental to adjacent properties.

9) *Not constitute nuisance or hazard.* Whether the proposed Conditional Zoning (CZ) District use constitutes a nuisance or hazard due to traffic impact or noise, or because of the number of persons who will be using the Conditional Zoning (CZ) District use.

10) *Other relevant standards of this Ordinance.* Whether the proposed Conditional Zoning (CZ) District use complies with all standards imposed on it by all other applicable provisions of this Ordinance for use, layout, and general development characteristics.


Rezoning #20CZ12
Colby Crossing
Miramonte
Merion
Merion Station Dr
Lianfair Ln
Smith Rd
Harmony Glen
Summer Ridge Ct
Derry Down Ln
Briarwood Farms COSD
Westford Way
Stephenson Rd
Brook Cross Dr
Cherrystone Ln
Lynnford Dr
Briarwood Farms
Thriftwood Dr
Coralberry Cir
Holly Brook Dr
Indian Hills
Saponi Hills
Arrowhead Dr
Banview Ln
Fair Oaks
0
500
1,000
Feet
November, 2020
September, 2020 Aerial Photography
Prepared by: Town of Apex Planning Department

## PETITION TO AMEND THE OFFICIAL ZONING MAP & 2045 LAND USE MAP

This document is a public record under the North Carolina Public Records Act and may be published on the Town's website or disclosed to third parties.

Application #: 20CZ12 Submittal Date:

2045 LUM Amendment: Fee Paid:

### Project Information

Project Name: Felton Grove High School (H-12)

Address(es): 8550 Stephenson Road, Apex, NC

PIN(s): 0750-54-5646

Acreage: 68.06

Current Zoning: MD-CZ Proposed Zoning: MD CZ

Current 2045 LUM Designation: School

Proposed 2045 LUM Designation: School

See next page for LUM Amendment.

If any portion of the project is shown as mixed use (3 or more stripes on the 2045 Land Use Map) provide the following:

Area classified as mixed use: Acreage: n/a

Area proposed as non-residential development: Acreage: n/a

Percent of mixed use area proposed as non-residential: Percent: n/a

### Applicant Information

Name: Ms. Betty L. Parker, Senior Director, WCPSS Real Estate Services

Address: 5625 Dillard Drive, Attn: Real Estate Services

City: Cary State: NC Zip: 27518

Phone: 919-856-8290 E-mail: bparker@wcpss.net

### Owner Information

Name: The Wake County Board of Education

Address: 5625 Dillard Drive, Attn: Real Estate Services

City: Cary State: NC Zip: 27518

Phone: 919-856-8290 E-mail: bparker@wcpss.net

### Agent Information

Name:

Address:

City: State: Zip:

Phone: E-mail:

Other contacts: Margaret Sutter, Director, WCPSS Real Estate Services

Phone: 919-856-8290

Email: msutter@wcpss.net

## PETITION TO AMEND THE OFFICIAL ZONING MAP & 2045 LAND USE MAP

Application #: 20CZ12 Submittal Date:

## 2045 LAND USE MAP AMENDMENT (IF APPLICABLE)

The applicant does hereby respectfully request the Town Council amend the 2045 Land Use Map. In support of this request, the following facts are shown:

The area sought to be amended on the 2045 Land Use Map is located at:

N/A

Current 2045 Land Use Classification: N/A

Proposed 2045 Land Use Classification: N/A

What condition(s) justifies the passage of the amendment to the 2045 Land Use Map? Discuss the existing use classifications of the subject area in addition to the adjacent land use classifications. Use additional pages as needed.

N/A

## PETITION INFORMATION

Application #: 20CZ12 Submittal Date: _____

An application has been duly filed requesting that the property described in this application be rezoned from MD-CZ to MD-CZ. It is understood and acknowledged that if the property is rezoned as requested, the property described in this request will be perpetually bound to the use(s) authorized and subject to such conditions as imposed, unless subsequently changed or amended as provided for in the Unified Development Ordinance. It is further understood and acknowledged that final plans for any specific development to be made pursuant to any such Conditional Zoning shall be submitted for site or subdivision plan approval. Use additional pages as needed.

## PROPOSED USES:

The Rezoned Lands may be used for, and only for, the uses listed immediately below. The permitted uses are subject to the limitations and regulations stated in the UDO and any additional limitations or regulations stated below. For convenience, some relevant sections of the UDO may be referenced; such references do not imply that other sections of the UDO do not apply.

| | | | |
|---|---|---|---|
| 1 | School, Public or Private | 21 | |
| 2 | Communication tower, camouflage stealth (S) | 22 | |
| 3 | Communication tower, public safety (S) | 23 | |
| 4 | Wireless communication facility | 24 | |
| 5 | Wireless support structure | 25 | |
| 6 | Church or place of worship (S) | 26 | |
| 7 | | 27 | |
| 8 | | 28 | |
| 9 | | 29 | |
| 10 | | 30 | |
| 11 | | 31 | |
| 12 | | 32 | |
| 13 | | 33 | |
| 14 | | 34 | |
| 15 | | 35 | |
| 16 | | 36 | |
| 17 | | 37 | |
| 18 | | 38 | |
| 19 | | 39 | |
| 20 | | 40 | |

## PETITION INFORMATION

Application #: 20CZ12 Submittal Date:

## PROPOSED CONDITIONS:

The applicant hereby requests that the Town Council of the Town of Apex, pursuant to the Unified Development Ordinance, approve the Conditional Zoning for the above listed use(s) subject to the following condition(s). Use additional pages as needed.

Proposed conditions are listed on the subsequent page which is included herein and incorporated by reference.

## LEGISLATIVE CONSIDERATIONS - CONDITIONAL ZONING

The applicant shall propose site-specific standards and conditions that take into account the following considerations, which are considerations that are relevant to the legislative determination of whether or not the proposed conditional zoning district rezoning request is in the public interest. These considerations do not exclude the legislative consideration of any other factor that is relevant to the public interest. Use additional pages as needed.

1) *Consistency with 2045 Land Use Map.* The proposed Conditional Zoning (CZ) District use's appropriateness for its proposed location and consistency with the purposes, goals, objectives, and policies of the 2045 Land Use Map.

The proposed Conditional Zoning District uses are consistent with goals, objectives and policies of the 2045 Land Use Map. The uses proposed are appropriate for this location. A Land Use Map amendment is not required.

2) *Compatibility.* The proposed Conditional Zoning (CZ) District use's appropriateness for its proposed location and compatibility with the character of surrounding land uses.

The proposed Conditional Zoning District uses are appropriate for this location. The uses proposed are compatible with the existing uses in the area.

Rezoning Case #20CZ12 Felton Grove High School – Proposed Conditions (per 2/17/21 meeting)

1. This project shall preserve trees measuring 18-inches in diameter at breast height or greater to the maximum extent reasonably possible.
2. In compliance with the UDO and to optimize survival of landscaping, an extension of up to 6 months' time may be provided for installation of landscaping after a Certificate of Occupancy would otherwise be issued.
3. To support re-establishment of forest, a reforestation seed mix shall be used in disturbed areas with slopes of 3:1 or less, and not located within RCAs or SCMs. To expedite growth and avoid erosion, a slope stabilizing mix with conservation seed mix shall be used to slopes greater than 3:1 but less than 2:1 and not located within RCAs or SCMs.
4. This project shall dedicate a 20-foot on-site public greenway easement and within it provide a 10-foot greenway path and/or 10-foot sidewalk connection from the driveway connection at Thriftwood Drive to the western property line.
5. This project shall also provide off-site a combined greenway and sanitary sewer easement to accommodate future greenway construction by others. To comply with Section 900 of the Town's Standard Specifications, the combined public utility and greenway easement shall be recorded providing no less than 30 feet in width, or 10 feet beyond the minimum required for the sanitary sewer, whichever is greater. The public greenway easement shall extend from the western boundary of the site, across the landfill site (Wake Co. PIN 0750-44-1182) to the landfill's western boundary.
6. The Vehicular Use Area Shading described in UDO Section 8.2.5.C is not required in the area between the parking deck and parking lot near the site's eastern boundary. Instead, the same number of trees required to meet this standard will be planted elsewhere on the site. The remainder of the site shall meet the requirements of UDO Section 8.2.5.C. to the maximum extent reasonably possible.
7. The 2045 Transportation Plan shows a future north-south Minor Collector along the eastern property line starting at Derry Downs Lane extending to the northern site boundary. This project shall provide half of the required 60-foot right-of-way as shown on the plan.
8. Improvements to the existing streets known as Thriftwood Drive and Derry Down Lane (identified as public streets having a 60' right of way on the Briarwood Farms-COSD subdivision map recorded in Book of Maps 1986-2149, Wake County Registry, and as accepted by Wake County for use by the general public by instrument recorded in Book 7714 at Page 404, Wake County Registry) shall be provided to satisfy such NCDOT requirements made upon review of the traffic study for the project which are minimally necessary to provide adequate public access as state-maintained roadways to Stephenson Road. Consequently, the existing streets known as Thriftwood Drive and Derry Down Lane are not proposed for upgrades to meet Town of Apex standards nor are they proposed for dedication to the Town of Apex.
9. The northern perimeter buffer shall be a 20-foot Type B buffer, except where segmental retaining wall tie-backs would encroach. In those areas, it shall be no less than a 15-foot Type A buffer.
10. Cast-in-place retaining walls shall be permitted within the western 20-foot Type B buffer, as long as sufficient landscaping is planted around and on top of the walls to meet the requirements of the 20-foot Type B buffer.

Application #: 20CZ12 Submittal Date:

3) Zoning district supplemental standards. The proposed Conditional Zoning (CZ) District use's compliance with Sec 4.4, Supplemental Standards, if applicable.

The proposed Conditional Zoning (CZ) District uses will comply with Sec 4.4, Supplemental Standards.

4) *Design minimizes adverse impact.* The design of the proposed Conditional Zoning (CZ) District use's minimization of adverse effects, including visual impact of the proposed use on adjacent lands; and avoidance of significant adverse impacts on surrounding lands regarding trash, traffic, service delivery, parking and loading, odors, noise, glare, and vibration and not create a nuisance.

Proposed Conditional Zoning District uses will have minimal if any significant adverse impacts on surrounding lands as to trash, odors, service delivery, noise, glare and vibration and will comply with the standards in the UDO to minimize adverse impacts. The proposed uses will comply with the standards of the Transportation Plan and NCDOT requirements to minimize adverse impacts on traffic, parking and loading. Proposed uses will not create a nuisance.

5) *Design minimizes environmental impact.* The proposed Conditional Zoning District use's minimization of environmental impacts and protection from significant deterioration of water and air resources, wildlife habitat, scenic resources, and other natural resources.

The proposed Conditional Zoning District uses will comply with local and state guidelines that address environmental impact. The standards pertaining to these items in the UDO will be followed.

6) *Impact on public facilities.* The proposed Conditional Zoning (CZ) District use's avoidance of having adverse impacts on public facilities and services, including roads, potable water and wastewater facilities, parks, schools, police, fire and EMS facilities.

The proposed Conditional Zoning District uses will not have an adverse impact on public facilities. The Applicant will extend and improve public potable water and sewer infrastructure to minimize any impacts on public facilities. The site will meet the 2045 Land Use and Transportation Plans and NCDOT requirements.

7) *Health, safety, and welfare.* The proposed Conditional Zoning (CZ) District use's effect on the health, safety, or welfare of the residents of the Town or its ETJ.

The proposed development will comply with Town regulations and the requirements of the UDO and will not affect the health, safety or welfare of the residents of the Town or its ETJ.

Application #: 20CZ12 Submittal Date:

8) *Detrimental to adjacent properties.* Whether the proposed Conditional Zoning (CZ) District use is substantially detrimental to adjacent properties.

The proposed Conditional Zoning District use will not be substantially detrimental to adjacent properties. The proposed uses are compatible with the uses in the area. The proposed development will comply with the requirements in the UDO.

9) *Not constitute nuisance or hazard.* Whether the proposed Conditional Zoning (CZ) District use constitutes a nuisance or hazard due to traffic impact or noise, or because of the number of persons who will be using the Conditional Zoning (CZ) District use.

The proposed Conditional Zoning District use will not constitute a nuisance or hazard. There will not be a negative impact due to traffic or noise. The site will meet the 2045 Land Use and Transportation Plans, and will comply with the requirements of NCDOT and the UDO to minimize adverse traffic impacts.

10) *Other relevant standards of this Ordinance.* Whether the proposed Conditional Zoning (CZ) District use complies with all standards imposed on it by all other applicable provisions of this Ordinance for use, layout, and general development characteristics.

The proposed Conditional Zoning District use will comply with all relevant standards found in the Town of Apex Ordinances.

## CERTIFIED LIST OF NEIGHBORING PROPERTY OWNERS

Application #: 20CZ12 Submittal Date: _____

Provide a certified list of property owners subject to this application and all property owners within 300' of the subject property and HOA Contacts.

| | Owner's Name | PIN |
|---|---|---|
| 1. | See attached list of property owners and HOA contacts which is | |
| 2. | incorporated herein by reference as fully as if set forth herein. | |
| 3. | | |
| 4. | | |
| 5. | | |
| 6. | | |
| 7. | | |
| 8. | | |
| 9. | | |
| 10. | | |
| 11. | | |
| 12. | | |
| 13. | | |
| 14. | | |
| 15. | | |

I, Betty L. Parker, certify that this is an accurate listing of all property owners and property owners within 300' of the subject property.

Date: October 28, 2020 By: _____, Sr. Dir
Betty L. Parker, Sr. Director, WCPSS Real Estate Services

COUNTY OF WAKE STATE OF NORTH CAROLINA

Sworn and subscribed before me, Margaret Sutter, a Notary Public for the above State and County, on this the 28th day of October, 2020.

SEAL

MARGARET SUTTER
NOTARY PUBLIC
WAKE COUNTY, NC
My Commission Expires _____

_____
Notary Public
Margaret Sutter
Print Name

My Commission Expires: 5/7/2022

| # of Property Owners | PIN | Real Estate ID | Owner | Mail Address 1 | Mail Address 2 | Site Address |
|---|---|---|---|---|---|---|
| 1 | 0750643379 | 159768 | AQUA NORTH CAROLINA, INC. | 202 MACKENAN DR | CARY NC 27511-6447 | 3008 THRIFTWOOD DR |
| 2 | 0750644717 | 159766 | AQUA NORTH CAROLINA, INC. | 202 MACKENAN DR | CARY NC 27511-6447 | 3016 THRIFTWOOD DR |
| 3 | 0750663067 | 159765 | AQUA NORTH CAROLINA, INC. | 202 MACKENAN DR | CARY NC 27511-6447 | 5049 DERRY DOWN LN |
| 4 | 0750642452 | 175263 | BRIARTAC FAMILY LLC Attn: TONYA C. CUMALANDER, TRUSTEE | PO BOX 1055 | FUQUAY VARINA NC 27526-1055 | 3012 THRIFTWOOD DR |
| 5 | 0750646366 | 159769 | BRIARTAC FAMILY LLC Attn: TONYA C. CUMALANDER, TRUSTEE | PO BOX 1055 | FUQUAY VARINA NC 27526-1055 | 3004 THRIFTWOOD DR |
| 6 | 0750652582 | 159767 | BRIARTAC FAMILY LLC Attn: TONYA C. CUMALANDER, TRUSTEE | PO BOX 1055 | FUQUAY VARINA NC 27526-1055 | 0 THRIFTWOOD DR |
| 7 | 0750657552 | 067494 | BRIARTAC FAMILY LLC Attn: TONYA C. CUMALANDER, TRUSTEE | PO BOX 1055 | FUQUAY VARINA NC 27526-1055 | 3468 CHERRYSTONE LN |
| 8 | 0750664237 | 159756 | BRIARTAC FAMILY LLC Attn: TONYA C. CUMALANDER, TRUSTEE | PO BOX 1055 | FUQUAY VARINA NC 27526-1055 | 5052 DERRY DOWN LN |
| 9 | 0750665132 | 159763 | BRIARTAC FAMILY LLC Attn: TONYA C. CUMALANDER, TRUSTEE | PO BOX 1055 | FUQUAY VARINA NC 27526-1055 | 5045 DERRY DOWN LN |
| 10 | 0750665218 | 159755 | BRIARTAC FAMILY LLC Attn: TONYA C. CUMALANDER, TRUSTEE | PO BOX 1055 | FUQUAY VARINA NC 27526-1055 | 5048 DERRY DOWN LN |
| 11 | 0750665398 | 159753 | BRIARTAC FAMILY LLC Attn: TONYA C. CUMALANDER, TRUSTEE | PO BOX 1055 | FUQUAY VARINA NC 27526-1055 | 5040 LORRY LN |
| 12 | 0750665475 | 159752 | BRIARTAC FAMILY LLC Attn: TONYA C. CUMALANDER, TRUSTEE | PO BOX 1055 | FUQUAY VARINA NC 27526-1055 | 5036 LORRY LN |
| 13 | 0750666104 | 159762 | BRIARTAC FAMILY LLC Attn: TONYA C. CUMALANDER, TRUSTEE | PO BOX 1055 | FUQUAY VARINA NC 27526-1055 | 5041 DERRY DOWN LN |
| 14 | 0750666219 | 159754 | BRIARTAC FAMILY LLC Attn: TONYA C. CUMALANDER, TRUSTEE | PO BOX 1055 | FUQUAY VARINA NC 27526-1055 | 5044 DERRY DOWN LN |
| 15 | 0750456507 | 109149 | CHAMBLEE, DAVIS B. CHAMBLEE, LEANNE M. | 8509 SMITH RD | APEX NC 27539-8169 | 8509 SMITH RD |
| 16 | 0750441182 | 069355 | CURRIN BROS INC | PO BOX 547 | FUQUAY VARINA NC 27526-0547 | 4237 SUNSET LAKE RD |
| 17 | 0750576147 | 107587 | DEAN, JOSEPH W. DEAN, CHRISTINE W. | 8317 SMITH RD | APEX NC 27539-8179 | 8317 SMITH RD |
| 18 | 0750549090 | 130747 | DEW, BESSIE W. | 4712 JOSEPH MICHAEL CT | RALEIGH NC 27606-9646 | 4632 ARROWHEAD DR |
| 19 | 0750631918 | 130748 | DEW, BESSIE W. | 4712 JOSEPH MICHAEL CT | RALEIGH NC 27606-9646 | 4628 ARROWHEAD DR |
| 20 | 0750632916 | 130749 | DEW, BESSIE W. | 4712 JOSEPH MICHAEL CT | RALEIGH NC 27606-9646 | 4624 ARROWHEAD DR |
| 21 | 0750633913 | 130750 | DEW, BESSIE W. | 4712 JOSEPH MICHAEL CT | RALEIGH NC 27606-9646 | 4620 ARROWHEAD DR |
| 22 | 0750634925 | 130751 | DEW, BESSIE W. | 4712 JOSEPH MICHAEL CT | RALEIGH NC 27606-9646 | 4616 ARROWHEAD DR |
| 23 | 0750538989 | 130746 | DEW, JOHNNIE M. DEW, BESSIE W. | 4712 JOSEPH MICHAEL CT | RALEIGH NC 27606-9646 | 4636 ARROWHEAD DR |
| 24 | 0750466564 | 109146 | EMERY, JASON G. EMERY, JOANNA L. | 8409 SMITH RD | APEX NC 27539-8181 | 8409 SMITH RD |

| | | | | | | |
|---|---|---|---|---|---|---|
| 25 | 0750665745 | 284548 | HARMONY GLEN HOMEOWNERS ASSOC INC | 3921 SUNSET RIDGE RD., STE. 201 | RALEIGH NC 27607-6679 | 0 RHYTHM DR |
| 26 | 0750456175 | 109150 | REVOCABLE LIVING TRUST OF<br>DENNIS MCCOY & RANDY GARREN | 8537 SMITH RD | APEX NC 27539-8169 | 8549 SMITH RD |
| 27 | 0750466110 | 107588 | SCOTT, RONALD D.<br>SCOTT, MELODY S. | 8429 SMITH RD | APEX NC 27539-8181 | 8429 SMITH RD |
| 28 | | | TOWN OF APEX PLANNING DEPARTMENT | PO BOX 250 | APEX, NC 27502 | |
| 29 | 0750545646 | 018131 | WAKE COUNTY BOARD OF EDUCATION | Attn: REAL ESTATE SERVICES,<br>111 CORNING ROAD, STE. 100 | CARY NC 27518 | 8550 STEPHENSON RD |

## AGENT AUTHORIZATION FORM

Application #: 20CZ12 Submittal Date: _____

The Wake County Board of Education is the owner* of the property for which the attached application is being submitted:

- ☐ Land Use Amendment
- ☑ Rezoning: For Conditional Zoning and Planned Development rezoning applications, this authorization includes express consent to zoning conditions that are agreed to by the Agent which will apply if the application is approved.
- ☐ Site Plan
- ☐ Subdivision
- ☐ Variance
- ☐ Other: _____

The property address is: 8550 Stephenson Road, Apex, NC

The agent for this project is: Betty L. Parker, Sr. Director, WCPSS Real Estate Services

☐ I am the owner of the property and will be acting as my own agent

Agent Name: Betty L. Parker, Sr. Director, WCPSS Real Estate Services, for and on behalf of the Wake County Board of Education pursuant to duly delegated authority.

Address: 5625 Dillard Drive, Attn: Real Estate Services, Cary, NC 27518

Telephone Number: 919-856-8290

E-Mail Address: bparker@wcpss.net

Signature(s) of Owner(s)*

Betty L. Parker, Sr. Director, WCPSS Real Estate Services — October 28, 2020

Type or print name — Date

_____

_____ _____

Type or print name — Date

Attach additional sheets if there are additional owners.

*Owner of record as shown on the latest equalized assessment rolls of Wake County. An option to purchase does not constitute ownership. If ownership has been recently transferred, a copy of the deed must accompany this authorization.

Pursuant to Article 40 of Chapter 66 of the North Carolina General Statutes (the Uniform Electronic Transactions Act) this application and all documents related hereto containing an electronic or digitized signature are legally binding in the same manner as are hard copy documents executed by hand signature. The parties hereby consent to use electronic or digitized signatures in accordance with the Town's Electronic Signature Policy and intend to be bound by the application and any related documents. If electronic signatures are used the application shall be delivered in an electronic record capable of retention by the recipient at the time of receipt.

## AFFIDAVIT OF OWNERSHIP

Application #: 20CZ12 Submittal Date: _____

The undersigned, Betty L. Parker, Senior Director, WCPSS Real Estate Services (the "Affiant") first being duly sworn, hereby swears or affirms as follows:

1. Affiant is over eighteen (18) years of age and authorized to make this Affidavit. The Affiant is the sole owner, or is the authorized agent of all owners, of the property located at 8550 Stephenson Road and legally described in **Exhibit "A"** attached hereto and incorporated herein (the "Property").

2. This Affidavit of Ownership is made for the purpose of filing an application for development approval with the Town of Apex.

3. If Affiant is the owner of the Property, Affiant acquired ownership by deed, dated 9/15/2016, and recorded in the Wake County Register of Deeds Office on 9/16/2016, in Book 16534 Page 545 and 550.

4. If Affiant is the authorized agent of the owner(s) of the Property, Affiant possesses documentation indicating the agency relationship granting the Affiant the authority to apply for development approval on behalf of the owner(s).

5. If Affiant is the owner of the Property, from the time Affiant was deeded the Property on 9/16/2016, Affiant has claimed sole ownership of the Property. Affiant or Affiant's predecessors in interest have been in sole and undisturbed possession and use of the property during the period of ownership. Since taking possession of the Property on 9/16/2016, no one has questioned Affiant's ownership or right to possession nor demanded any rents or profits. To Affiant's knowledge, no claim or action has been brought against Affiant (if Affiant is the owner), or against owner(s) (if Affiant is acting as an authorized agent for owner(s)), which questions title or right to possession of the property, nor is any claim or action pending against Affiant or owner(s) in court regarding possession of the Property.

This the 28th day of October, 20 20.

_____ (seal)
Betty L. Parker, Sr. Director, WCPSS Real Estate Services, for and on behalf of the Wake County Board of Education pursuant to duly delegated authority.
Type or print name

STATE OF NORTH CAROLINA
COUNTY OF Wake

I, the undersigned, a Notary Public in and for the County of Wake, hereby certify that Betty L. Parker, Affiant, personally known to me or known to me by said Affiant's presentation of said Affiant's NC Driver License, personally appeared before me this day and acknowledged the due and voluntary execution of the foregoing Affidavit.

MARGARET SUTTER
NOTARY PUBLIC
WAKE COUNTY, NC
My Commission Expires_____

[NOTARY SEAL]

_____
Notary Public Margaret Sutter
State of North Carolina
My Commission Expires: 5/7/2022

## AFFIDAVIT OF OWNERSHIP: EXHIBIT A – LEGAL DESCRIPTION

Application #: 20CZ12 Submittal Date: _____

**Insert legal description below.**

See legal description attached hereto and incorported herein by reference as fully as if set forth herein.

Town of Apex Rezoning Legal Description: PIN 0750-54-5646

**(WCPSS: Felton Grove High School, 8550 Stephenson Road, Apex, NC 27539)**

**BEGINNING** AT AN IRON SHANK AT THE NORTHEASTERN MOST CORNER OF THE SUBJECT PROPERTY; THENCE, S 00°52'15" W A DISTANCE OF 2337.40' TO AN IRON PIPE; THENCE, S 86°51'34" W A DISTANCE OF 1224.63' TO AN IRON PIPE WITH CAP AND TACK; THENCE, N 02°01'22" W A DISTANCE OF 632.89' TO A 36" OAK STUMP; THENCE, N 01°19'50" E A DISTANCE OF 1795.11' TO AN IRON PIPE; THENCE, S 88°56'30" E A DISTANCE OF 1239.18' TO THE **POINT OF BEGINNING**, CONTAINING 68.06 ACRES MORE OR LESS.

# Instruction Packet and Affidavit for
# Neighborhood Meetings

Town of Apex
Planning Department
PO Box 250
Apex, NC 27502

T: 919-249-3426
F: 919-249-3338

**This packet consists of instructions and templates for conducting a required Neighborhood Meeting. Planning Department staff are available to advise you in the preparation of these materials. Call the Planning Department at (919) 249-3426 for more information.**

## WHAT IS THE PURPOSE OF A NEIGHBORHOOD MEETING?

A neighborhood meeting is a required form of community outreach to receive initial feedback regarding certain project types prior to submittal to the Planning Department per the standards found in UDO Sec. 2.2.7. The intention of the meeting is to initiate neighbor communication and identify issues and concerns early on and provide the applicant an opportunity to address neighbor concerns about the potential impacts of the project prior to submitting an application. A neighborhood meeting is valid for six (6) months prior to the submission of an application; a delay in submission requires a new neighborhood meeting.

## WHEN IS A NEIGHBORHOOD MEETING REQUIRED?

- Rezonings (including Planned Unit Developments);
- Major Site Plans;
- Residential Master Subdivision Plans (excluding exempt subdivisions); or
- Special Use Permits

## INSTRUCTIONS

Prior to submitting an application for a Rezoning, Major Site Plan, residential Master Subdivision Plan (excluding exempt subdivisions), or Special Use Permit, the applicant must conduct at least one (1) Neighborhood Meeting. The applicant shall submit all forms included in this packet with the initial application submittal.

The Neighborhood Meeting must be held in accordance with the following rules:

**These groups and individuals must be invited to the meeting:**

- The applicant is required to notify the Planning Department, all property owners within 300 feet of the subject property, and any neighborhood association that represents citizens in the area via first class mail a minimum of 10 days in advance of the neighborhood meeting, not including the day of mailing. The applicant shall use <u>their own return address</u> on the envelopes as the meeting is a private meeting between the applicant and the neighbors.
- The applicant shall include with the meeting notice a vicinity map in addition to either the existing zoning map of the area or preliminary plans of the proposed development (see Handout requirements below).

**The meeting must be held within specific timeframes and meet certain requirements:**

- The meeting must be held for a minimum of two (2) hours, Monday through Thursday, during the 5:00 p.m. - 9:00 p.m. time period. The meeting cannot be held on a Town recognized holiday (which coincide with the State of North Carolina recognized holidays).
- The meeting shall be held at a place that is generally accessible to neighbors that reside in close proximity to the land subject to the application.
- A sign-in sheet must be used in order to verify attendance. Ensure each attendee signs in. Please note if any person(s) refuses to sign in. Note if no one attended.
- Handout requirements:
    - For rezonings (excluding rezonings to PUD-CZ, TND-CZ and MEC-CZ), a vicinity map and existing zoning map of the area must be provided to help facilitate discussion.
    - For rezonings to PUD-CZ, TND-CZ and MEC-CZ; Major Site Plans; residential Master Subdivision Plans; and Special Use Permits, preliminary plans of the proposed development must be available at the meeting to help facilitate discussion. Neighbors may request emailed/mailed copies of the maps or plans from the applicant by checking the "send plans" box on the sign-in sheet; applicant shall provide reduced copies upon request.
    - Printed copies must equal the number of notices required to be sent.
    - Contact information for the applicant's representative and Town Staff must be provided on the attached "Project Contact Information" form.
    - "Common Construction Issues & Who to Call" sheet (attached) must be included as part of the handout.
    - A copy of the handout must be included as part of the Neighborhood Meeting report.
- The agenda of the meeting shall include:
    - Explanation of all processes the meeting is being held for (rezoning, subdivision, etc.).
    - Explanation of future meetings (additional neighborhood meetings, Planning Board, Town Council, etc.).
    - Explanation of development proposal – uses and conditions for rezonings, layout for subdivision and site plans, and builder/end user if known/public knowledge.
- Questions or concerns by attendees, and responses by the applicant, if any, must be noted. Provide blank comment sheets or notecards for neighbors to submit written comments. The applicant shall also include any questions and concerns received via written correspondence (such as email) or phone call along with responses provided by the applicant.
- The applicant shall be responsible for notifying any neighbors who check the "Send Plans & Updates" box on the sign-in sheet of any additional neighborhood meetings and the actual submittal date to the Town with a link to the Town of Apex's Interactive Development Map.

**For accountability purposes, please submit the following with your application:**

- A copy of the letter mailed to neighbors and neighborhood organizations (use attached invitation template);
- A list of those persons and neighborhood organizations invited to the meeting;
- A copy of the sign-in sheet (use attached sign-in sheet template);
- A summary of the meeting and a list of any changes made to the project as a result of the neighborhood comments (use attached meeting summary template);
- The affidavit, signed, dated, and notarized (use attached affidavit template); and
- One reduced copy of the maps and/or plans presented to the neighbors at the Neighborhood Meeting.

# NOTICE OF ELECTRONIC NEIGHBORHOOD MEETING

This document is a public record under the North Carolina Public Records Act and may be published on the Town's website or disclosed to third parties.

October 14, 2020
Date

Dear Neighbor:

You are invited to an electronic neighborhood meeting to review and discuss the development proposal at

| 8550 Stephenson Road, Apex, NC 27539-9381 | 0750-54-5646 |
|---|---|
| Address(es) | PIN(s) |

in accordance with the Town of Apex Electronic Neighborhood Meeting procedures. This meeting is intended to be a way for the applicant to discuss the project and review the proposed plans with adjacent neighbors and neighborhood organizations before the submittal of an application to the Town. This provides neighbors an opportunity to raise questions and discuss any concerns about the impacts of the project before it is officially submitted. If you are unable to attend, you may contact the applicant before or after the meeting is held. Once an application has been submitted to the Town, it may be tracked using the Interactive Development Map or the Apex Development Report located on the Town of Apex website at www.apexnc.org. If at all feasible given emergency declarations, limits on in-person gatherings, and social distancing, an additional in-person Neighborhood Meeting may be scheduled and held prior to a public hearing or staff decision on the application.

An Electronic Neighborhood Meeting is required because this project includes (check all that apply):

| | Application Type | Approving Authority |
|---|---|---|
| ⊙ | Rezoning (including Planned Unit Development) | Town Council |
| ☐ | Major Site Plan | Town Council (QJPH*) |
| ☐ | Special Use Permit | Town Council (QJPH*) |
| ☐ | Residential Master Subdivision Plan (excludes exempt subdivisions) | Technical Review Committee (staff) |

*Quasi-Judicial Public Hearing: The Town Council cannot discuss the project prior to the public hearing.

The following is a description of the proposal (also see attached map(s) and/or plan sheet(s)):

The Applicant proposes to rezone the subject parcel from a Medium Density - Conditional Zoning District (MD-CZ) to a Medium Density - Conditional Zoning District (MD-CZ) with certain land uses permitted by the Town of Apex UDO and subject to proposed zoning conditions to support a public school development (Felton Grove HS).

Estimated submittal date: November 2, 2020

**MEETING INFORMATION:**

| | |
|---|---|
| Property Owner(s) name(s): | The Wake County Board of Education |
| Applicant(s): | Betty L. Parker, Senior Director, WCPSS Real Estate Services |
| Contact information (email/phone): | Email. bparker@wcpss.net; Tel. 919-856-8290 (9:00-5:00 M-F) |
| Electronic Meeting invitation/call in info: | Webex Link: https://bit.ly/3lGnBE7 or Phone: 1-408-418-9388 |
| Date of meeting**: | October 27, 2020 |
| Time of meeting**: | 5:30 p.m. to 7:30 p.m. |

**MEETING AGENDA TIMES:**

Welcome: 5:30 p.m. Project Presentation: 5:40 p.m. Question & Answer: 6:00 p.m.

**Meetings shall occur between 5:00 p.m.-9:00 p.m. on a Monday through Thursday (excluding Town recognized holidays). If you have questions about the general process for this application, please contact the Planning Department at 919-249-3426. You may also find information about the Apex Planning Department and on-going planning efforts at http://www.apexnc.org/180/Planning.

## Wake County GIS Aerial Vicinity Map

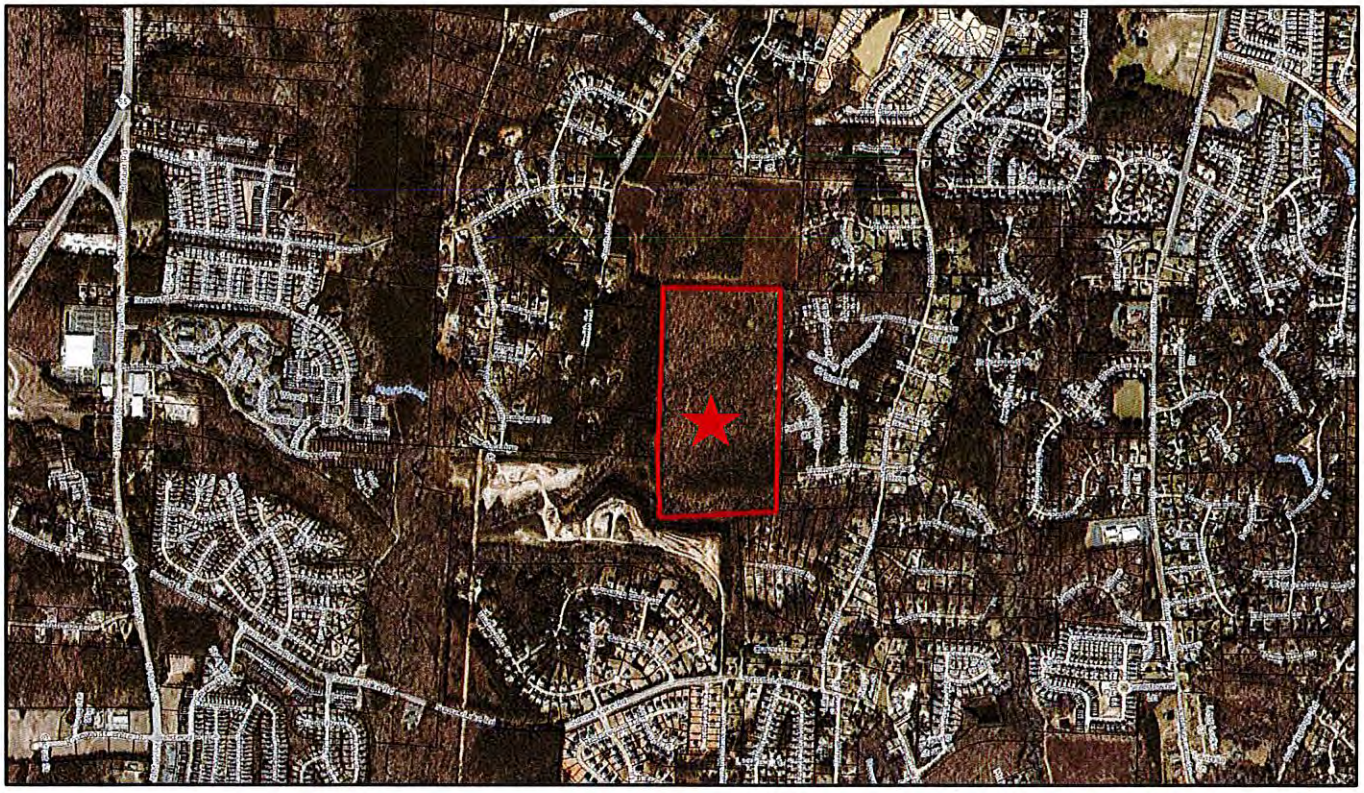

## Town of Apex Official Zoning District Map

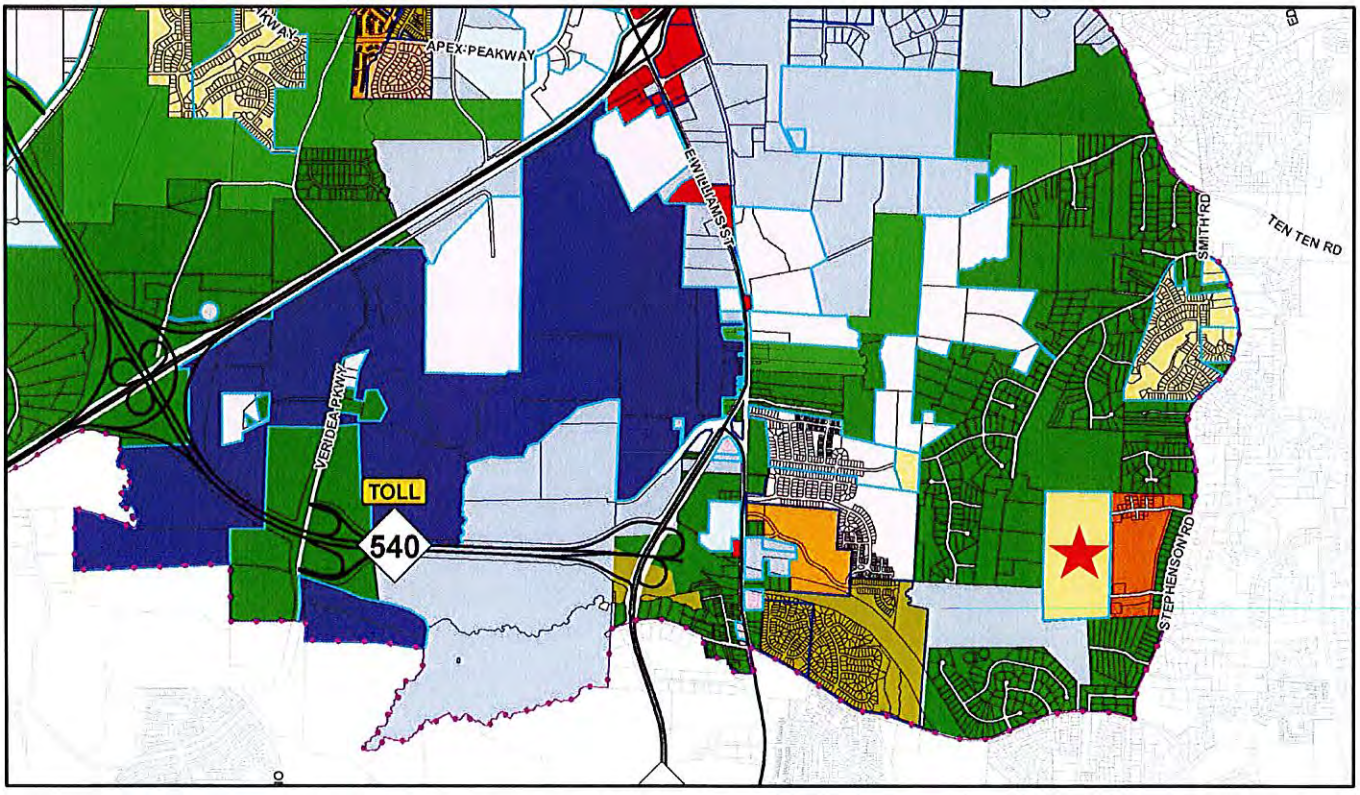

# PROJECT CONTACT INFORMATION

This document is a public record under the North Carolina Public Records Act and may be published on the Town's website or disclosed to third parties.

## Development Contacts:

Project Name: Felton Grove High School Zoning: MD-CZ

Location: 8550 Stephenson Road, Apex, NC

Property PIN(s): 0750545646 Acreage/Square Feet: ±68.06 acres

Property Owner: The Wake County Board of Education

Address: 5625 Dillard Drive, Attn: Real Estate Services

City: Cary State: NC Zip: 27518

Phone: 919-856-8290 Email: bparker@wcpss.net

Developer: Same as property owner

Address:

City: State: Zip:

Phone: Fax: Email:

Engineer: CLH Design, PA

Address: 400 Regency Forest Dr., Attn: Renee Pfeifer

City: Cary State: NC Zip: 27518

Phone: 919-319-6716 Fax: Email: rpfeifer@clhdesignpa.com

Builder (if known):

Address:

City: State: Zip:

Phone: Fax: Email:

**Please note that Town staff will not have complete information about a proposed development until the application is submitted for review. If you have a question about Town development standards and how they relate to the proposed development, please contact the appropriate staff person listed below.**

## Town of Apex Department Contacts

| | |
|---|---|
| Planning Department Main Number<br>(Provide development name or location to be routed to correct planner) | (919) 249-3426 |
| Parks, Recreation & Cultural Resources Department<br>Angela Reincke, Parks Planner | (919) 249-7468 |
| Public Works - Transportation<br>Russell Dalton, Senior Transportation Engineer | (919) 249-3358 |
| Water Resources Department<br>Jessica Bolin, Senior Engineer (Stormwater, Sedimentation & Erosion Control)<br>Stan Fortier, Senior Engineer (Stormwater, Sedimentation & Erosion Control)<br>James Gregg, Utility Engineer (Water & Sewer) | <br>(919) 249-3537<br>(919) 249-1166<br>(919) 249-3324 |
| Electric Utilities Division<br>Rodney Smith, Electric Technical Services Manager | (919) 249-3342 |

## Providing Input to Town Council:

Each Town Council meeting agenda includes a Public Forum time when anyone is permitted to speak for three (3) minutes on any topic with the exception of items listed as Public Hearings for that meeting. The Town Council meets on the 1st and 3rd Tuesdays of each month at 6:00 p.m. (except for holidays, see schedule of meetings at http://www.apexnc.org/838/Agendas-Minutes). You may also contact Town Council by e-mail at AllCouncil@apexnc.org.

## Private Agreements and Easement Negotiation:

The Town of Apex cannot enforce private agreements between developers and neighbors and is not a party to the easement and right-of-way negotiation that occurs between developers and neighboring property owners for easements or rights-of-way that are necessary to build the project.

It is recommended that all private agreements be made in writing and that if a property owner feels it necessary, they should obtain private legal counsel in order to protect their interests in both private agreements and during easement negotiations. The only conditions that the Town of Apex can enforce are those conditions that are made a part of the conditional zoning of the property by agreement of the developer and the Town.

As an example, if a developer offers to build a fence for a neighbor to mitigate some impact, the Town can only enforce the construction of the fence if the fence becomes a condition of the rezoning. This would occur by the developer offering the condition as part of their conditional zoning application package or at the Town Council public hearing on the conditional zoning and the Town accepting it as a condition. Private agreements regarding a fence being constructed will not be enforced by the Town.

To request that any agreement with a developer is made a part of the conditional zoning at the time of approval, you may ask at the Town Council public hearing if the agreement is included in the conditions. If it is not, you may request that the Town Council not approve the rezoning without the agreement being included in the conditions (note that it is up to Town Council whether to approve or deny the rezoning but they cannot impose conditions that the applicant does not agree to add). The developer's proposed conditions can be viewed any time after a rezoning is submitted on the Interactive Development Map at: http://apexnc.maps.arcgis.com/apps/OnePane/basicviewer/index.html?appid=fa9ba2017b784030b15ef4da27d9e795

## Documentation:

Neighbors to a requested new development and/or rezoning are strongly encouraged to fully document (such as through dated photographs) the condition of their property before any work is initiated for the new development. Stormwater controls installed on developed property are not designed to and will likely not remove 100% of the soil particles transported by stormwater runoff. As a result, creeks and ponds could become cloudy for a period of time after rain events.

# COMMON CONSTRUCTION ISSUES & WHO TO CALL

This document is a public record under the North Carolina Public Records Act and may be published on the Town's website or disclosed to third parties.

**Noise & Hours of Construction:** **Non-Emergency Police** **919-362-8661**

Noise from tree removal, grading, excavating, paving, and building structures is a routine part of the construction process. The Town generally limits construction hours from 7:00 a.m. to 8:30 p.m. so that there are quiet times even during the construction process. Note that construction outside of these hours is allowed with special permission from the Town when it makes more sense to have the construction occur at night, often to avoid traffic issues. In addition, the Town limits hours of blasting rock to Monday through Friday from 8:00 a.m. to 5:00 p.m. Report violations of construction hours and other noise complaints to the Non-Emergency Police phone number at 919-362-8661.

**Construction Traffic:** **James Misciagno** **919-372-7470**

Construction truck traffic will be heavy throughout the development process, including but not limited to removal of trees from site, loads of dirt coming in and/or out of the site, construction materials such as brick and wood brought to the site, asphalt and concrete trucks come in to pave, etc. The Town requires a construction entrance that is graveled to try to prevent as much dirt from leaving the site as possible. If dirt does get into the road, the Town can require they clean the street (see "Dirt in the Road" below).

**Road Damage & Traffic Control:** **Water Resources – Infrastructure Inspections** **919-362-8166**

There can be issues with roadway damage, roadway improvements, and traffic control. Potholes, rutting, inadequate lanes/signing/striping, poor traffic control, blocked sidewalks/paths are all common issues that should be reported to Water Resources – Infrastructure Inspections at 919-249-3427. The Town will get NCDOT involved if needed.

**Parking Violations:** **Non-Emergency Police** **919-362-8661**

Unless a neighbor gives permission, there should be no construction parking in neighbors' driveways or on their property. Note that parking in the right-of-way is allowed, but Town regulations prohibit parking within 15 feet of driveways so as not to block sight triangles. Trespassing and parking complaints should be reported to the Non-Emergency Police phone number at 919-362-8661.

**Dirt in the Road:** **James Misciagno** **919-372-7470**

Sediment (dirt) and mud gets into the existing roads due to rain events and/or vehicle traffic. These incidents should be reported to James Misciagno. He will coordinate the cleaning of the roadways with the developer.

**Dirt on Properties or in Streams:** **James Misciagno** **919-372-7470**
**Danny Smith** **Danny.Smith@ncdenr.gov**

Sediment (dirt) can leave the site and get onto adjacent properties or into streams and stream buffers; it is typically transported off-site by rain events. These incidents should be reported to James Misciagno at 919-372-7470 so that he can coordinate the appropriate repairs with the developer. Impacts to the streams and stream buffers should also be reported to Danny Smith (danny.smith@ncdenr.gov) with the State.

**Dust:** **James Misciagno** **919-372-7470**

During dry weather dust often becomes a problem blowing into existing neighborhoods or roadways. These incidents should be reported to James Misciagno at 919-372-7470 so that he can coordinate the use of water trucks onsite with the grading contractor to help control the dust.

**Trash:** **James Misciagno** **919-372-7470**

Excessive garbage and construction debris can blow around on a site or even off of the site. These incidents should be reported to James Misciagno at 919-372-7470. He will coordinate the cleanup and trash collection with the developer/home builder.

**Temporary Sediment Basins:** **James Misciagno** **919-372-7470**

Temporary sediment basins during construction (prior to the conversion to the final stormwater pond) are often quite unattractive. Concerns should be reported to James Misciagno at 919-372-7470 so that he can coordinate the cleaning and/or mowing of the slopes and bottom of the pond with the developer.

**Stormwater Control Measures:** **Mike Deaton** **919-249-3413**

Post-construction concerns related to Stormwater Control Measures (typically a stormwater pond) such as conversion and long-term maintenance should be reported to Mike Deaton at 919-249-3413.

**Electric Utility Installation:** **Rodney Smith** **919-249-3342**

Concerns with electric utility installation can be addressed by the Apex Electric Utilities Department. Contact Rodney Smith at 919-249-3342.

# NEIGHBORHOOD MEETING SIGN-IN SHEET

This document is a public record under the North Carolina Public Records Act and may be published on the Town's website or disclosed to third parties.

Meeting Address: Virtual Meeting

Date of meeting: October 27, 2020 Time of meeting: 5:30 p.m. - 7:30 p.m.

Property Owner(s) name(s): The Wake County Board of Education

Applicant(s): The Wake County Board of Education

Please print your name below, state your address and/or affiliation with a neighborhood group, and provide your phone number and email address. Providing your name below does not represent support or opposition to the project; it is for documentation purposes only.

| | NAME/ORGANIZATION | ADDRESS | PHONE # | EMAIL | SEND PLANS & UPDATES |
|---|---|---|---|---|---|
| 1. | *No Attendees other than WCPSS staff joined the virtual meeting.* | | | | |
| 2. | | | | | |
| 3. | | | | | |
| 4. | | | | | |
| 5. | | | | | |
| 6. | | | | | |
| 7. | | | | | |
| 8. | | | | | |
| 9. | | | | | |
| 10. | | | | | |
| 11. | | | | | |
| 12. | | | | | |
| 13. | | | | | |
| 14. | | | | | |

*Use additional sheets, if necessary.*

# SUMMARY OF DISCUSSION FROM THE NEIGHBORHOOD MEETING

This document is a public record under the North Carolina Public Records Act and may be published on the Town's website or disclosed to third parties.

Property Owner(s) name(s): The Wake County Board of Education

Applicant(s): The Wake County Board of Education

Contact information (email/phone): Betty L. Parker;, WCPSS RES Sr. Director; bparker@wcpss.net/(919)-856-8290

Meeting Address: Virtual

Date of meeting: October 27, 2020 Time of meeting: 5:30 p.m. - 7:30 p.m.

Please summarize the questions/comments and your response from the Neighborhood Meeting in the spaces below (attach additional sheets, if necessary). Please state if/how the project has been modified in response to any concerns. The response should not be "Noted" or "No Response". There has to be documentation of what consideration the neighbor's concern was given and justification for why no change was deemed warranted.

Question/Concern #1:

*N/A*

Applicant's Response:

Question/Concern #2:

Applicant's Response:

Question/Concern #3:

Applicant's Response:

Question/Concern #4:

Applicant's Response:

# AFFIDAVIT OF CONDUCTING A NEIGHBORHOOD MEETING, SIGN-IN SHEET AND ISSUES/RESPONSES SUBMITTAL

This document is a public record under the North Carolina Public Records Act and may be published on the Town's website or disclosed to third parties.

I, Betty L. Parker, Sr. Director, WCPSS RES, do hereby declare as follows:
Print Name

1. I have conducted a Neighborhood Meeting for the proposed Rezoning, Major Site Plan, Master Subdivision Plan, or Special Use Permit in accordance with UDO Sec. 2.2.7 *Neighborhood Meeting*.

2. The meeting invitations were mailed to the Apex Planning Department, all property owners within 300 feet of the subject property and any neighborhood association that represents citizens in the area via first class mail a minimum of 10 days in advance of the Neighborhood Meeting.

3. The meeting was conducted at Virtual Meeting (location/address) on October 27, 2020 (date) from 5:30 p.m. (start time) to 7:30 p.m. (end time).

4. I have included the mailing list, meeting invitation, sign-in sheet, issue/response summary, and zoning map/reduced plans with the application.

5. I have prepared these materials in good faith and to the best of my ability.

October 28, 2020
Date

By: Betty Parker, Sr. Dir.
Betty L. Parker, Sr. Director, WCPSS Real Estate Services

STATE OF NORTH CAROLINA
COUNTY OF WAKE

Sworn and subscribed before me, Margaret Sutter, a Notary Public for the above State and County, on this the 28th day of October, 2020.

SEAL
MARGARET SUTTER
NOTARY PUBLIC
WAKE COUNTY, NC
My Commission Expires

Margaret Sutter
Notary Public
Margaret Sutter
Print Name

My Commission Expires: 5/7/2022

# PLANNING BOARD REPORT TO TOWN COUNCIL

Rezoning Case: 20CZ12 Felton Grove High School

**Planning Board Meeting Date:** March 8, 2021

## Report Requirements:

Per NCGS §160D-604(b), all proposed amendments to the zoning ordinance or zoning map shall be submitted to the Planning Board for review and comment. If no written report is received from the Planning Board within 30 days of referral of the amendment to the Planning Board, the Town Council may act on the amendment without the Planning Board report. The Town Council is not bound by the recommendations, if any, of the Planning Board.

Per NCGS §160D-604(d), the Planning Board shall advise and comment on whether the proposed action is consistent with all applicable officially adopted plans, and provide a written recommendation to the Town Council that addresses plan consistency and other matters as deemed appropriate by the Planning Board, but a comment by the Planning Board that a proposed amendment is inconsistent with the officially adopted plans shall not preclude consideration or approval of the proposed amendment by the Town Council.

**PROJECT DESCRIPTION:**

**Acreage:** +/- 68.06 acres

**PIN(s):** 0750545646

**Current Zoning:** Medium Density Residential-Conditional Zoning (MD-CZ #12CZ14)

**Proposed Zoning:** Medium Density Residential-Conditional Zoning (MD-CZ)

**2045 Land Use Map:** School

**Town Limits:** Inside ETJ

## Applicable Officially Adopted Plans:

The Board must state whether the project is consistent or inconsistent with the following officially adopted plans, if applicable. Applicable plans have a check mark next to them.

☑ 2045 Land Use Map
☑ Consistent ☐ Inconsistent Reason: _____

☑ Apex Transportation Plan
☑ Consistent ☐ Inconsistent Reason: _____

☐ Parks, Recreation, Open Space, and Greenways Plan
☐ Consistent ☐ Inconsistent Reason: _____

**Legislative Considerations:**

The applicant shall propose site-specific standards and conditions that take into account the following considerations, which are considerations that are relevant to the legislative determination of whether or not the proposed conditional zoning district rezoning request is in the public interest. These considerations do not exclude the legislative consideration of any other factor that is relevant to the public interest.

1. *Consistency with 2045 Land Use Plan*. The proposed Conditional Zoning (CZ) District use's appropriateness for its proposed location and consistency with the purposes, goals, objectives, and policies of the 2045 Land Use Plan.
   ☑ Consistent ☐ Inconsistent Reason: _____

2. *Compatibility.* The proposed Conditional Zoning (CZ) District use's appropriateness for its proposed location and compatibility with the character of surrounding land uses.
   ☑ Consistent ☐ Inconsistent Reason: _____

3. *Zoning district supplemental standards*. The proposed Conditional Zoning (CZ) District use's compliance with Sec. 4.4 *Supplemental Standards*, if applicable.
   ☑ Consistent ☐ Inconsistent Reason: _____

4. *Design minimizes adverse impact.* The design of the proposed Conditional Zoning (CZ) District use's minimization of adverse effects, including visual impact of the proposed use on adjacent lands; and avoidance of significant adverse impacts on surrounding lands regarding trash, traffic, service delivery, parking and loading, odors, noise, glare, and vibration and not create a nuisance.
   ☑ Consistent ☐ Inconsistent Reason: _____

5. *Design minimizes environmental impact.* The proposed Conditional Zoning District use's minimization of environmental impacts and protection from significant deterioration of water and air resources, wildlife habitat, scenic resources, and other natural resources.
   ☑ Consistent ☐ Inconsistent Reason: _____

6. *Impact on public facilities.* The proposed Conditional Zoning (CZ) District use's avoidance of having adverse impacts on public facilities and services, including roads, potable water and wastewater facilities, parks, schools, police, fire and EMS facilities.
   ☑ Consistent ☐ Inconsistent Reason: _____

7. *Health, safety, and welfare.* The proposed Conditional Zoning (CZ) District use's effect on the health, safety, or welfare of the residents of the Town or its ETJ.
   ☑ Consistent ☐ Inconsistent Reason: _____

8. *Detrimental to adjacent properties.* Whether the proposed Conditional Zoning (CZ) District use is substantially detrimental to adjacent properties.
   ☑ Consistent ☐ Inconsistent Reason: _____

9. *Not constitute nuisance or hazard.* Whether the proposed Conditional Zoning (CZ) District use constitutes a nuisance or hazard due to traffic impact or noise, or because of the number of persons who will be using the Conditional Zoning (CZ) District use.
   ☑ Consistent ☐ Inconsistent Reason: _____

10. *Other relevant standards of this Ordinance.* Whether the proposed Conditional Zoning (CZ) District use complies with all standards imposed on it by all other applicable provisions of this Ordinance for use, layout, and general development characteristics.
    ☑ Consistent ☐ Inconsistent Reason: _____

**Planning Board Recommendation:**

Motion: To recommend approval as presented plus condition #11.

Introduced by Planning Board member: Tina Sherman

Seconded by Planning Board member: Ryan Akers

☐ *Approval*: the project is consistent with all applicable officially adopted plans and the applicable legislative considerations listed above.

☑ *Approval with conditions*: the project is not consistent with all applicable officially adopted plans and/or the applicable legislative considerations as noted above, so the following conditions are recommended to be included in the project in order to make it fully consistent:

Conditions as offered by applicant plus additional condition recommended by staff (condition #11).

☐ *Denial*: the project is not consistent with all applicable officially adopted plans and/or the applicable legislative considerations as noted above.

With 6 Planning Board Member(s) voting "aye"

With 0 Planning Board Member(s) voting "no"

Reasons for dissenting votes:

This report reflects the recommendation of the Planning Board, this the 8th day of March 2021.

Attest:

Michael Marks Digitally signed by Michael Marks Date: 2021.03.09 14:49:22 -05'00'

Michael Marks, Planning Board Chair

Dianne Khin Digitally signed by Dianne Khin Date: 2021.03.08 17:36:49 -05'00'

Dianne Khin, Director of Planning and Community Development

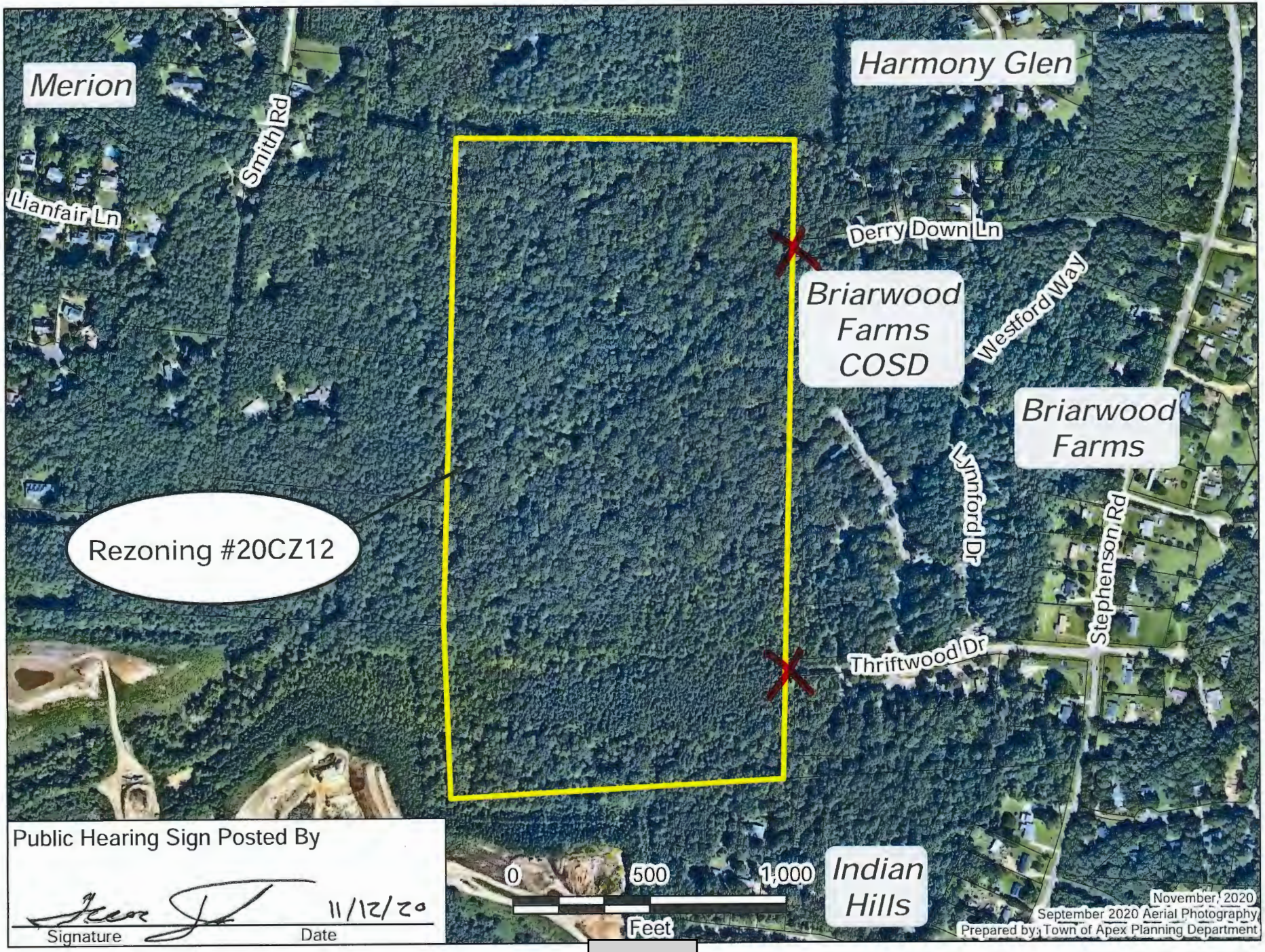


Public Hearing Sign Posted By

Signature

11/12/20

Date

AGENDA
apexnc.org/DocumentC...
Paused
Apps Todoist Apps & Schedules UDO HR Other bookmarks

**TOWN OF APEX**
POST OFFICE BOX 250
APEX, NORTH CAROLINA 27502
PHONE 919-249-3426

**PUBLIC NOTIFICATION**
**OF PUBLIC HEARINGS**
CONDITIONAL ZONING #20CZ12
Felton Grove High School

Pursuant to the provisions of North Carolina General Statutes §160A-364 and to the Town of Apex Unified Development Ordinance (UDO) Section 2.2.11, notice is hereby given of public hearings before the Planning Board of the Town of Apex. The purpose of these hearings is to consider the following:

**Applicant:** Wake County Board of Education
**Authorized Agent:** Betty Parker
**Property Address:** 8550 Stephenson Road
**Acreage:** ±68.06
**Property Identification Number (PIN):** 0750545646
**2045 Land Use Map Designation:** School
**Existing Zoning of Properties:** Medium Density Residential-Conditional Zoning (MD-CZ #12CZ14)
**Proposed Zoning of Properties:** Medium Density Residential-Conditional Zoning (MD-CZ)

**Planning Board Remote Public Hearing Date and Time: February 8, 2021 4:30 PM**

You may view the meeting through the Town's YouTube livestream at: https://www.youtube.com/c/townofapexgov.

Comments may be provided by email (public.hearing@apexnc.org, 350-word limit) or voicemail (919-362-7300, 3-minute limit) according to the Remote Participation Policy at: http://www.apexnc.org/DocumentCenter/View/31397/. You must provide your name and address for the record. Comments shared by noon on Friday, February 5, 2021 will be read during this Planning Board meeting.

***Planning Board Remote Review of Additional Comments and Vote Date and Time: February 10, 2021 5:00 PM**

**According to NCGS §166A-19.24, when a public hearing is held with at least one member attending virtually, written comments on the subject of the public hearing may be submitted between publication of any required notice and 24 hours after the public hearing.*

You may view the meeting through the Town's YouTube livestream at: https://www.youtube.com/c/townofapexgov.

Comments may be provided by email (public.hearing@apexnc.org, 350-word limit) or voicemail (919-362-7300, 3-minute limit) according to the Remote Participation Policy at: http://www.apexnc.org/DocumentCenter/View/31397/. You must provide your name and address for the record. Comments shared between noon on Friday, February 5, 2021 and 24 hours after the end of the first Planning Board meeting will be read during this meeting.

**A separate notice of the Town Council public hearing on this project will be mailed and posted in order to comply with State public notice requirements.**

**Vicinity Map:**




Property owners within 300 feet of the proposed conditional zoning have been sent this notice via first class mail. All interested parties may submit comments with respect to the application by the means specified above. In addition to the above map, the location of the property may be viewed online at https://maps.raleighnc.gov/imaps. The 2045 Land Use Map may be viewed online at www.apexnc.org/DocumentCenter/View/478/. You may call 919-249-3426, Department of Planning and Community Development, with questions or for further information. To view the petition and related documents on-line: https://www.apexnc.org/DocumentCenter/View/33873/.

Dianne F. Khin, AICP
Director of Planning and Community Development

Published Dates: January 26, 2021 – February 10, 202



3:48 PM
1/26/2021

**TOWN OF APEX**
POST OFFICE BOX 250
APEX, NORTH CAROLINA 27502
PHONE 919-249-3426

# PUBLIC NOTIFICATION OF PUBLIC HEARINGS

CONDITIONAL ZONING #20CZ12
Felton Grove High School

Pursuant to the provisions of North Carolina General Statutes §160A-364 and to the Town of Apex Unified Development Ordinance (UDO) Section 2.2.11, notice is hereby given of public hearings before the Planning Board of the Town of Apex. The purpose of these hearings is to consider the following:

**Applicant:** Wake County Board of Education
**Authorized Agent:** Betty Parker
**Property Address:** 8550 Stephenson Road
**Acreage:** ±68.06
**Property Identification Number (PIN):** 0750545646
**2045 Land Use Map Designation:** School
**Existing Zoning of Properties:** Medium Density Residential-Conditional Zoning (MD-CZ #12CZ14)
**Proposed Zoning of Properties:** Medium Density Residential-Conditional Zoning (MD-CZ)

**Planning Board Remote Public Hearing Date and Time: February 8, 2021 4:30 PM**

You may view the meeting through the Town's YouTube livestream at: https://www.youtube.com/c/townofapexgov.

Comments may be provided by email (public.hearing@apexnc.org, 350-word limit) or voicemail (919-362-7300, 3-minute limit) according to the Remote Participation Policy at: http://www.apexnc.org/DocumentCenter/View/31397/. You must provide your name and address for the record. Comments shared by noon on Friday, February 5, 2021 will be read during this Planning Board meeting.

***Planning Board Remote Review of Additional Comments and Vote Date and Time: February 10, 2021 5:00 PM**

**According to NCGS §166A-19.24, when a public hearing is held with at least one member attending virtually, written comments on the subject of the public hearing may be submitted between publication of any required notice and 24 hours after the public hearing.*

You may view the meeting through the Town's YouTube livestream at: https://www.youtube.com/c/townofapexgov.

Comments may be provided by email (public.hearing@apexnc.org, 350-word limit) or voicemail (919-362-7300, 3-minute limit) according to the Remote Participation Policy at: http://www.apexnc.org/DocumentCenter/View/31397/. You must provide your name and address for the record. Comments shared between noon on Friday, February 5, 2021 and 24 hours after the end of the first Planning Board meeting will be read during this meeting.

**A separate notice of the Town Council public hearing on this project will be mailed and posted in order to comply with State public notice requirements.**

**Vicinity Map:**




Property owners within 300 feet of the proposed conditional zoning have been sent this notice via first class mail. All interested parties may submit comments with respect to the application by the means specified above. In addition to the above map, the location of the property may be viewed online at https://maps.raleighnc.gov/imaps. The 2045 Land Use Map may be viewed online at www.apexnc.org/DocumentCenter/View/478/. You may call 919-249-3426, Department of Planning and Community Development, with questions or for further information. To view the petition and related documents on-line: https://www.apexnc.org/DocumentCenter/View/33873/.

Dianne F. Khin, AICP
Director of Planning and Community Development



Published Dates: January 26, 2021 – February 10, 2021

**TOWN OF APEX**
POST OFFICE BOX 250
APEX, NORTH CAROLINA 27502
PHONE 919-249-3426

# PUBLIC NOTIFICATION OF PUBLIC HEARINGS

CONDITIONAL ZONING #20CZ12
Felton Grove High School
CONTINUED

Pursuant to the provisions of North Carolina General Statutes §160A-364 and to the Town of Apex Unified Development Ordinance (UDO) Section 2.2.11, notice is hereby given of public hearings before the Planning Board of the Town of Apex. The purpose of these hearings is to consider the following:

**Applicant:** Wake County Board of Education
**Authorized Agent:** Betty Parker
**Property Address:** 8550 Stephenson Road
**Acreage:** ±68.06
**Property Identification Number (PIN):** 0750545646
**2045 Land Use Map Designation:** School
**Existing Zoning of Properties:** Medium Density Residential-Conditional Zoning (MD-CZ #12CZ14)
**Proposed Zoning of Properties:** Medium Density Residential-Conditional Zoning (MD-CZ)

**Planning Board Remote Public Hearing Date and Time: February 8, 2021 4:30 PM**

You may view the meeting through the Town's YouTube livestream at: https://www.youtube.com/c/townofapexgov.

Comments may be provided by email (public.hearing@apexnc.org, 350-word limit) or voicemail (919-362-7300, 3-minute limit) according to the Remote Participation Policy at: http://www.apexnc.org/DocumentCenter/View/31397/. You must provide your name and address for the record. Comments shared by noon on Friday, February 5, 2021 will be read during this Planning Board meeting.

***Planning Board ~~Remote~~ Public Hearing and Review of Additional Comments and Vote Date and Time: ~~February 10, 2021 5:00 PM~~ Continued to March 8, 2021 4:30 PM**

This meeting may be held in person at Town Hall in the Council Chambers or remotely. Please check the Town's website or call 919-249-2426 prior to the meeting to confirm.

**According to NCGS §166A-19.24, when a public hearing is held with at least one member attending virtually, written comments on the subject of the public hearing may be submitted between publication of any required notice and 24 hours after the public hearing.*

You may view the meeting through the Town's YouTube livestream at: https://www.youtube.com/c/townofapexgov.

Comments may be provided by email (public.hearing@apexnc.org, 350-word limit) or voicemail (919-362-7300, 3-minute limit) according to the Remote Participation Policy at: http://www.apexnc.org/DocumentCenter/View/31397/. You must provide your name and address for the record. Comments shared ~~between noon on Friday, February 5, 2021 and 24 hours after the end of the first Planning Board meeting~~ by noon on Friday, March 5, 2021 will be read during this meeting.

If the meeting is held remotely, the vote on the subject of this public hearing will be delayed per State law to allow for comments to be submitted between publication of any required notice and 24 hours after the remote public hearing. Comments must be provided according to the means specified above. This item will be then be scheduled for the next Planning Board meeting. Please note that at this subsequent meeting, Planning Board may choose to vote on the item, table the discussion to a later date, or take other action which would delay Planning Board action to another time.

**A separate notice of the Town Council public hearing on this project ~~will be~~ was mailed and posted and will be re-posted after Town Council votes on the continuance on Feb. 23, 2021 in order to comply with State public notice requirements.**

**Vicinity Map:**




Property owners within 300 feet of the proposed conditional zoning have been sent this notice via first class mail. All interested parties may submit comments with respect to the application by the means specified above. In addition to the above map, the location of the property may be viewed online at https://maps.raleighnc.gov/imaps. The 2045 Land Use Map may be viewed online at www.apexnc.org/DocumentCenter/View/478/. You may call 919-249-3426, Department of Planning and Community Development, with questions or for further information. To view the petition and related documents on-line: https://www.apexnc.org/DocumentCenter/View/33873/.

Dianne F. Khin, AICP
Director of Planning and Community Development



Published Dates: January 26, 2021 – ~~February 10, 2021~~ M[illegible]

**TOWN OF APEX**
POST OFFICE BOX 250
APEX, NORTH CAROLINA 27502
PHONE 919-249-3426

## AFFIDAVIT CERTIFYING
## Public Notification – Written (Mailed) Notice

Section 2.2.11
Town of Apex Unified Development Ordinance

| | |
|---|---|
| Project Name: | CONDITIONAL ZONING #20CZ12<br>Felton Grove High School |
| Project Location: | 8550 Stephenson Road |
| Applicant or Authorized Agent: | Betty Parker |
| Firm: | Wake County Board of Education |

This is to certify that I, as Director of Planning and Community Development, mailed or caused to have mailed by first class postage for the above mentioned project on January 26, 2021, a notice containing the time and place, location, nature and scope of the application, where additional information may be obtained, and the opportunity for interested parties to be heard, to the property owners within 300' of the land subject to notification. I further certify that I relied on information provided to me by the above-mentioned person as to accuracy and mailing addresses of property owners within 300' of the land subject to notification.

1-26-2021
Date

Lauren Staudenmaier for Dianne Khin
Director of Planning and Community Development

---

STATE OF NORTH CAROLINA
COUNTY OF WAKE

Sworn and subscribed before me, Jeri Chastain Pederson, a Notary Public for the above State and County, this the 26 day of January, 2021.

Jeri Chastain Pederson
Notary Public

JERI CHASTAIN PEDERSON
Notary Public
Wake County, North Carolina
My Commission Expires
March 10, 2024

My Commission Expires: 03/10/2024

AGENDA
apexnc.org/DocumentC...
Paused
Apps Todoist Apps & Schedules UDO HR Other bookmarks
AGENDA 1 / 1 50%

**TOWN OF APEX**
POST OFFICE BOX 250
APEX, NORTH CAROLINA 27502
PHONE 919-249-3426

**PUBLIC NOTIFICATION**
**OF PUBLIC HEARINGS**
CONDITIONAL ZONING #20CZ12
Felton Grove High School

Pursuant to the provisions of North Carolina General Statutes §160A-364 and to the Town of Apex Unified Development Ordinance (UDO) Section 2.2.11, notice is hereby given of public hearings before the Town Council of the Town of Apex. The purpose of these hearings is to consider the following:

**Applicant:** Wake County Board of Education
**Authorized Agent:** Betty Parker
**Property Address:** 8550 Stephenson Road
**Acreage:** ±68.06
**Property Identification Number (PIN):** 0750545646
**2045 Land Use Map Designation:** School
**Existing Zoning of Properties:** Medium Density Residential-Conditional Zoning (MD-CZ #12CZ14)
**Proposed Zoning of Properties:** Medium Density Residential-Conditional Zoning (MD-CZ)

***Comments received prior to or during the Planning Board public hearing will not be read during the Town Council public hearing. Separate comments must be provided for the two public hearings in the time frames specified below.***

**Town Council Remote Public Hearing Date and Time: February 23, 2021 6:00 PM**
**According to NCGS §166A-19.24, when a public hearing is held with at least one member attending virtually, written comments on the subject of the public hearing may be submitted between publication of any required notice and 24 hours after the public hearing.*

You may view the meeting through the Town's YouTube livestream at: https://www.youtube.com/c/townofapexgov.

You may provide comments no sooner than Wednesday, February 10, 2021 but no later than noon on Monday, February 22, 2021 by email (public.hearing@apexnc.org, 350-word limit) or voicemail (919-362-7300, 3-minute limit) according to the Remote Participation Policy at: http://www.apexnc.org/DocumentCenter/View/31397/. You must provide your name and address for the record. These comments will be read during the Town Council meeting.

The vote on the subject of this public hearing will be delayed per State law to allow for comments to be submitted between publication of any required notice and 24 hours after the public hearing. Comments must be provided according to the means specified above. This item will be scheduled for the next Town Council meeting. Please note that at this subsequent meeting, Town Council may choose to vote on the item, table the discussion to a later date, or take other action which would delay Council action to another time.

**Vicinity Map:**




Property owners within 300 feet of the proposed conditional zoning have been sent this notice via first class mail. All interested parties may submit comments with respect to the application by the means specified above. In addition to the above map, the location of the property may be viewed online at https://maps.raleighnc.gov/imaps. The 2045 Land Use Map may be viewed online at www.apexnc.org/DocumentCenter/View/478/. You may call 919-249-3426, Department of Planning and Community Development, with questions or for further information. To view the petition and related documents on-line: https://www.apexnc.org/DocumentCenter/View/33873/.

F. Khin, AICP
or of Planning and Community Development

Published Dates: January 29, 2021 – February 23, 2



10:22 AM
1/29/2021

**TOWN OF APEX**
POST OFFICE BOX 250
APEX, NORTH CAROLINA 27502
PHONE 919-249-3426

# PUBLIC NOTIFICATION OF PUBLIC HEARINGS

## CONDITIONAL ZONING #20CZ12
## Felton Grove High School

Pursuant to the provisions of North Carolina General Statutes §160A-364 and to the Town of Apex Unified Development Ordinance (UDO) Section 2.2.11, notice is hereby given of public hearings before the Town Council of the Town of Apex. The purpose of these hearings is to consider the following:

**Applicant:** Wake County Board of Education
**Authorized Agent:** Betty Parker
**Property Address:** 8550 Stephenson Road
**Acreage:** ±68.06
**Property Identification Number (PIN):** 0750545646
**2045 Land Use Map Designation:** School
**Existing Zoning of Properties:** Medium Density Residential-Conditional Zoning (MD-CZ #12CZ14)
**Proposed Zoning of Properties:** Medium Density Residential-Conditional Zoning (MD-CZ)

***Comments received prior to or during the Planning Board public hearing will not be read during the Town Council public hearing. Separate comments must be provided for the two public hearings in the time frames specified below.***

**Town Council Remote Public Hearing Date and Time: February 23, 2021 6:00 PM**
**According to NCGS §166A-19.24, when a public hearing is held with at least one member attending virtually, written comments on the subject of the public hearing may be submitted between publication of any required notice and 24 hours after the public hearing.*

You may view the meeting through the Town's YouTube livestream at: https://www.youtube.com/c/townofapexgov.

You may provide comments no sooner than Wednesday, February 10, 2021 but no later than noon on Monday, February 22, 2021 by email (public.hearing@apexnc.org, 350-word limit) or voicemail (919-362-7300, 3-minute limit) according to the Remote Participation Policy at: http://www.apexnc.org/DocumentCenter/View/31397/. You must provide your name and address for the record. These comments will be read during the Town Council meeting.

The vote on the subject of this public hearing will be delayed per State law to allow for comments to be submitted between publication of any required notice and 24 hours after the public hearing. Comments must be provided according to the means specified above. This item will be then be scheduled for the next Town Council meeting. Please note that at this subsequent meeting, Town Council may choose to vote on the item, table the discussion to a later date, or take other action which would delay Council action to another time.

**Vicinity Map:**




Property owners within 300 feet of the proposed conditional zoning have been sent this notice via first class mail. All interested parties may submit comments with respect to the application by the means specified above. In addition to the above map, the location of the property may be viewed online at https://maps.raleighnc.gov/imaps. The 2045 Land Use Map may be viewed online at www.apexnc.org/DocumentCenter/View/478/. You may call 919-249-3426, Department of Planning and Community Development, with questions or for further information. To view the petition and related documents on-line: https://www.apexnc.org/DocumentCenter/View/33873/.

Dianne F. Khin, AICP
Director of Planning and Community Development

Published Dates: January 29, 2021 – February 23, 2021

**TOWN OF APEX**
POST OFFICE BOX 250
APEX, NORTH CAROLINA 27502
PHONE 919-249-3426

# PUBLIC NOTIFICATION OF PUBLIC HEARINGS

CONDITIONAL ZONING #20CZ12
Felton Grove High School
Continued

Pursuant to the provisions of North Carolina General Statutes §160A-364 and to the Town of Apex Unified Development Ordinance (UDO) Section 2.2.11, notice is hereby given of public hearings before the Town Council of the Town of Apex. The purpose of these hearings is to consider the following:

**Applicant:** Wake County Board of Education
**Authorized Agent:** Betty Parker
**Property Address:** 8550 Stephenson Road
**Acreage:** ±68.06
**Property Identification Number (PIN):** 0750545646
**2045 Land Use Map Designation:** School
**Existing Zoning of Properties:** Medium Density Residential-Conditional Zoning (MD-CZ #12CZ14)
**Proposed Zoning of Properties:** Medium Density Residential-Conditional Zoning (MD-CZ)

**Public Hearing Location:** Apex Town Hall
Council Chambers, 2nd Floor
73 Hunter Street, Apex, North Carolina

***Comments received prior to or during the Planning Board public hearing will not be read during the Town Council public hearing. Separate comments must be provided for the two public hearings in the time frames specified below.***

**Town Council ~~Remote~~ Public Hearing Date and Time: ~~February 23, 2021~~ continued to March 23, 2021 6:00 PM**
~~*According to NCGS §166A-19.24, when a public hearing is held with at least one member attending virtually, written comments on the subject of the public hearing may be submitted between publication of any required notice and 24 hours after the public hearing.~~

You may view the meeting through the Town's YouTube livestream at: https://www.youtube.com/c/townofapexgov.

If you are unable to attend, ~~Y~~you may provide comments no sooner than ~~Wednesday, February 10~~ Monday, March 8, 2021 but no later than noon on Monday, ~~February 22~~ March 22, 2021 by email (public.hearing@apexnc.org, 350-word limit) or voicemail (919-362-7300, 3-minute limit) according to the Remote Participation Policy at: http://www.apexnc.org/DocumentCenter/View/31397/. You must provide your name and address for the record. These comments will be read during the Town Council meeting.

If the meeting is held remotely, the vote on the subject of this public hearing will be delayed per State law to allow for comments to be submitted between publication of any required notice and 24 hours after the remote public hearing. Comments must be provided according to the means specified above. This item will be then be scheduled for the next Town Council meeting. Please note that at this subsequent meeting, Town Council may choose to vote on the item, table the discussion to a later date, or take other action which would delay Council action to another time.

**Vicinity Map:**

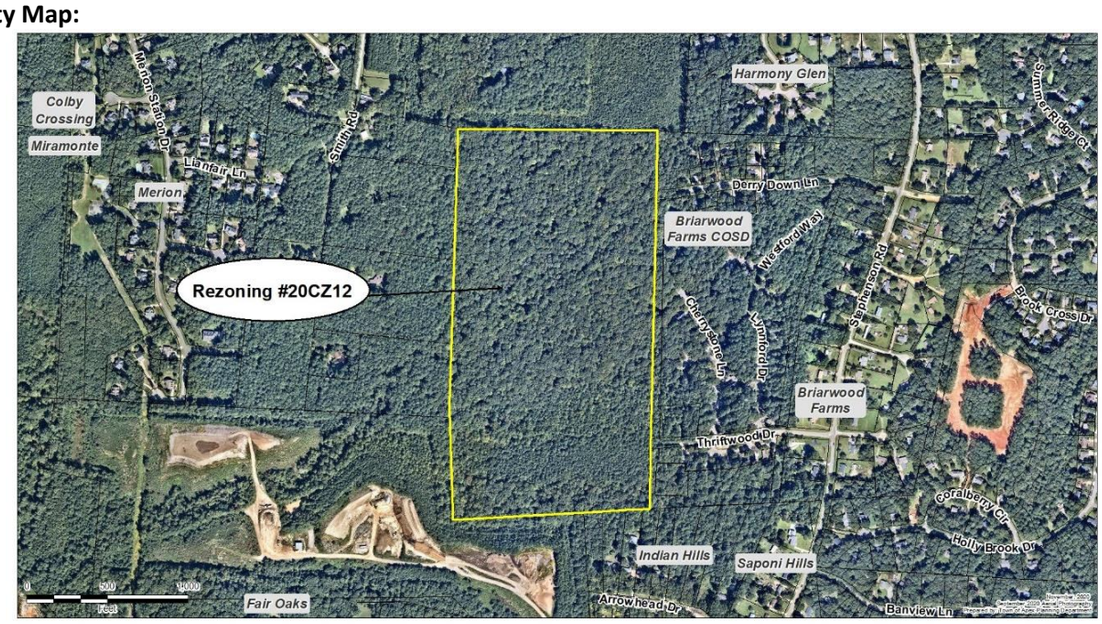


Property owners within 300 feet of the proposed conditional zoning have been sent this notice via first class mail. All interested parties may submit comments with respect to the application by the means specified above. In addition to the above map, the location of the property may be viewed online at https://maps.raleighnc.gov/imaps. The 2045 Land Use Map may be viewed online at www.apexnc.org/DocumentCenter/View/478/. You may call 919-249-3426, Department of Planning and Community Development, with questions or for further information. To view the petition and related documents on-line: https://www.apexnc.org/DocumentCenter/View/33873/.

Dianne F. Khin, AICP
Director of Planning and Community Development

Published Dates: January 29, 2021 – ~~February 23, 2021~~

**TOWN OF APEX**
POST OFFICE BOX 250
APEX, NORTH CAROLINA 27502
PHONE 919-249-3426

# REVISED PUBLIC NOTIFICATION OF PUBLIC HEARINGS

CONDITIONAL ZONING #20CZ12
Felton Grove High School
Continued

Pursuant to the provisions of North Carolina General Statutes §160A-364 and to the Town of Apex Unified Development Ordinance (UDO) Section 2.2.11, notice is hereby given of public hearings before the Town Council of the Town of Apex. The purpose of these hearings is to consider the following:

**Applicant:** Wake County Board of Education
**Authorized Agent:** Betty Parker
**Property Address:** 8550 Stephenson Road
**Acreage:** ±68.06
**Property Identification Number (PIN):** 0750545646
**2045 Land Use Map Designation:** School
**Existing Zoning of Properties:** Medium Density Residential-Conditional Zoning (MD-CZ #12CZ14)
**Proposed Zoning of Properties:** Medium Density Residential-Conditional Zoning (MD-CZ)

~~**Public Hearing Location:** Apex Town Hall~~
~~Council Chambers, 2nd Floor~~
~~73 Hunter Street, Apex, North Carolina~~

***Comments received prior to or during the Planning Board public hearing will not be read during the Town Council public hearing. Separate comments must be provided for the two public hearings in the time frames specified below.***

**Town Council Remote Public Hearing Date and Time: ~~February 23, 2021~~ continued to March 23, 2021 6:00 PM**
**According to NCGS §166A-19.24, when a public hearing is held with at least one member attending virtually, written comments on the subject of the public hearing may be submitted between publication of any required notice and 24 hours after the public hearing.*

You may view the meeting through the Town's YouTube livestream at: https://www.youtube.com/c/townofapexgov.

~~If you are unable to attend, Yy~~You may provide comments no sooner than ~~Wednesday, February 10~~ Monday, March 8, 2021 but no later than noon on Monday, ~~February 22~~ March 22, 2021 by email (public.hearing@apexnc.org, 350-word limit) or voicemail (919-362-7300, 3-minute limit) according to the Remote Participation Policy at: http://www.apexnc.org/DocumentCenter/View/31397/. You must provide your name and address for the record. These comments will be read during the Town Council meeting.

~~If the meeting is held remotely, t~~The vote on the subject of this public hearing will be delayed per State law to allow for comments to be submitted between publication of any required notice and 24 hours after the remote public hearing. Comments must be provided according to the means specified above. This item will then be scheduled for the next Town Council meeting on Thursday, March 25, 2021 at 9:00am. Please note that at this subsequent meeting, Town Council may choose to vote on the item, table the discussion to a later date, or take other action which would delay Council action to another time.

**Vicinity Map:**

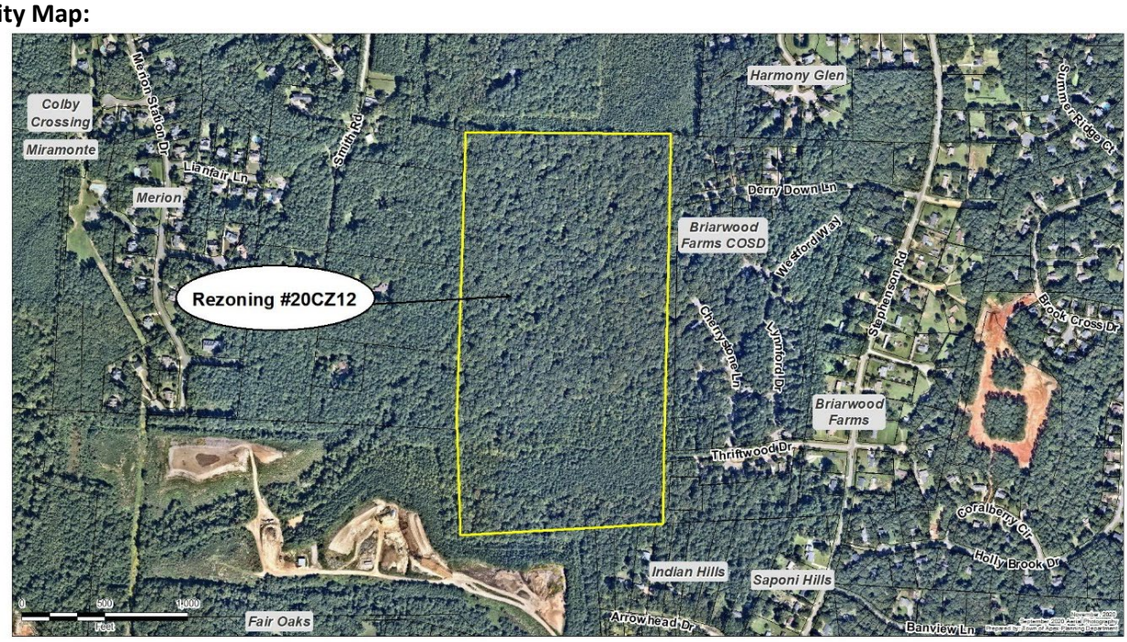


Property owners within 300 feet of the proposed conditional zoning have been sent this notice via first class mail. All interested parties may submit comments with respect to the application by the means specified above. In addition to the above map, the location of the property may be viewed online at https://maps.raleighnc.gov/imaps. The 2045 Land Use Map may be viewed online at www.apexnc.org/DocumentCenter/View/478/. You may call 919-249-3426, Department of Planning and Community Development, with questions or for further information. To view the petition and related documents on-line: https://www.apexnc.org/DocumentCenter/View/33873/.

Dianne F. Khin, AICP
Director of Planning and Community Development



Published Dates: January 29, 2021 – ~~February 23, 2021~~

**TOWN OF APEX**
POST OFFICE BOX 250
APEX, NORTH CAROLINA 27502
PHONE 919-249-3426

## AFFIDAVIT CERTIFYING
## Public Notification – Written (Mailed) Notice

Section 2.2.11
Town of Apex Unified Development Ordinance

| | |
|---|---|
| Project Name: | CONDITIONAL ZONING #20CZ12<br>Felton Grove High School |
| Project Location: | 8550 Stephenson Road |
| Applicant or Authorized Agent: | Betty Parker |
| Firm: | Wake County Board of Education |

This is to certify that I, as Director of Planning and Community Development, mailed or caused to have mailed by first class postage for the above mentioned project on January 29, 2021, a notice containing the time and place, location, nature and scope of the application, where additional information may be obtained, and the opportunity for interested parties to be heard, to the property owners within 300' of the land subject to notification. I further certify that I relied on information provided to me by the above-mentioned person as to accuracy and mailing addresses of property owners within 300' of the land subject to notification.

1-29-2021
Date

Lauren Staudenmaier for Dianne Khin
Director of Planning and Community Development

---

STATE OF NORTH CAROLINA
COUNTY OF WAKE

Sworn and subscribed before me, Jeri Chastain Pederson, a Notary Public for the above State and County, this the 29 day of January, 2021.

JERI CHASTAIN PEDERSON
Notary Public
Wake County, North Carolina
My Commission Expires
March 10, 2024

Jeri Chastain Pederson
Notary Public

My Commission Expires: 03/10/2024

# | Agenda Item | cover sheet

for consideration by the Apex Town Council

Item Type: PUBLIC HEARING

Meeting Date: March 23, 2021

## Item Details

Presenter(s): Shelly Mayo, Planner II

Department(s): Planning and Community Development

Requested Motion

Public hearing and possible motion to adopt an Ordinance on the Question of Annexation – Apex Town Council's intent to annex Wake County Board of Education (Felton Grove High School) property containing 68.06 acres located at 8550 Stephenson Road, Annexation #700 into the Town's corporate limits.

Approval Recommended?

Yes, by the Planning and Community Development Department.

Item Details

**This item was continued from the February 23, 2021 Town Council agenda.**

The Town Clerk certifies to the investigation of said annexation.

Attachments

- Annexation Ordinance
- Annexation Petition
- Legal Description
- Preliminary Plat

TOWN OF APEX, NORTH CAROLINA
Municipality No. 333

**After recording, please return to:**
**Donna Hosch, MMC, NCCMC, Town Clerk**
**Town of Apex**
**P.O. Box 250**
**Apex, NC 27502**

ORDINANCE NO. 2021-0323-11
ANNEXATION PETITION NO. #700
Wake County Board of Education (Felton Grove High School)

AN ORDINANCE TO EXTEND THE CORPORATE LIMITS
OF THE TOWN OF APEX, NORTH CAROLINA
P.O. Box 250, Apex, North Carolina 27502

WHEREAS, the Apex Town Council has been petitioned under G.S.§160A-58.1, as amended, to annex the area described herein; and

WHEREAS, the Apex Town Council has by Resolution directed the Town Clerk to investigate the sufficiency of said petition; and

WHEREAS, the Town Clerk has certified the sufficiency of said petition and a public hearing on the question of this annexation was held at Apex Town Hall at 6:00 p.m. on March 23, 2021, after due notice by posting to the Town of Apex website, http://www.apexnc.org/news/public-notices-legal-ads; and

WHEREAS, the Apex Town Council does hereby find as a fact that said petition meets the requirements of G.S.§160A-58.1, as amended.

NOW, THEREFORE, BE IT ORDAINED by the Town Council of Apex, North Carolina:

Section 1. By virtue of the authority granted by G.S.§160A-58.1, as amended, the territory described in the attached property description and also shown as "Annexation Area" on the below identified survey plat is hereby annexed and made part of the Town of Apex, North Carolina, as of the date of adoption of this Ordinance on March 25, 2021. The survey plat that describes the annexed territory is that certain survey plat entitled "Satellite Annexation Map for the Town of Apex, Property of The Wake County Board of Education, Dewberry Engineers Inc., dated November 16, 2020" and recorded in Book of Maps book number 2021 and page number , Wake County Registry.

Section 2. Upon and after the adoption of this ordinance, the territory described herein and its citizens and property shall be subject to all debts, laws, ordinances and regulations in force in the Town of Apex, North Carolina, and shall be entitled to the same privileges and benefits as other parts of the Town of Apex. Said territory shall be subject to municipal taxes according to G.S.§160A-58.10, as amended.

Section 3. The Clerk of the Town of Apex, North Carolina shall cause to be recorded in the Office of the Register of Deeds of Wake County and in the Office of the Secretary of State at Raleigh, North Carolina and in the Office of the Wake County Board of Elections an accurate map of the annexed territory, described in Section 1 hereof, together with a duly certified copy of this Ordinance.

Adopted this the 25th day of March 2021.

_____
Jacques K. Gilbert
Mayor

ATTEST:

_____
Donna B. Hosch, MMC, NCCMC
Town Clerk

APPROVED AS TO FORM:

_____
Laurie L. Hohe
Town Attorney

Legal Description

BEGINNING AT AN IRON SHANK AT THE NORTHEASTERN MOST CORNER OF THE SUBJECT PROPERTY; THENCE, S 00°52'15" W A DISTANCE OF 2337.40' TO AN IRON PIPE; THENCE, S 86°51'34" W A DISTANCE OF 1224.63' TO AN IRON PIPE WITH CAP AND TACK; THENCE, N 02°01'22" W A DISTANCE OF 632.89' TO A 36" OAK STUMP; THENCE, N 01°19'50" E A DISTANCE OF 1795.11' TO AN IRON PIPE; THENCE, S 88°56'30" E A DISTANCE OF 1239.18' TO THE POINT OF BEGINNING, CONTAINING 68.06 ACRES MORE OR LESS.

STATE OF NORTH CAROLINA

COUNTY OF WAKE

CLERK'S CERTIFICATION

I, Donna B. Hosch, MMC, NCCMC, Town Clerk, Town of Apex, North Carolina, do hereby certify the foregoing is a true and correct copy of Annexation Ordinance No. 2021-0323-11, adopted at a meeting of the Town Council, on the 25th day of March 2021, the original of which will be on file in the Office of the Town Clerk of Apex, North Carolina.

IN WITNESS WHEREOF, I have hereunto set my hand and affixed the official Seal of the Town of Apex, North Carolina, this the 26th day of March 2021.

_____

Donna B. Hosch, MMC, NCCMC
Town Clerk

(SEAL)

## PETITION FOR VOLUNTARY ANNEXATION

This document is a public record under the North Carolina Public Records Act and may be published on the Town's website or disclosed to third parties.

| | | | |
|---|---|---|---|
| Application #: | 700 | Submittal Date: | 11/2/2020 |
| Fee Paid | $ N/A | Check # | N/A |

### TO THE TOWN COUNCIL APEX, NORTH CAROLINA

1. We, the undersigned owners of real property, respectfully request that the area described in Part 4 below be annexed to the Town of Apex, Wake County, North Carolina.
2. The area to be annexed is ☐ contiguous, ■ non-contiguous (satellite) to the Town of Apex, North Carolina and the boundaries are as contained in the metes and bounds description attached hereto.
3. If contiguous, this annexation will include all intervening rights-of-way for streets, railroads and other areas as stated in G.S. 160A-31(f), unless otherwise stated in the annexation amendment.

### Owner Information

| | |
|---|---|
| The Wake County Board of Education | 0750-54-5646, DB 16534/PG 545 and DB 16534/PG 550 |
| Owner Name (Please Print) | Property PIN or Deed Book & Page # |
| 919-856-8290 | bparker@wcpss.net |
| Phone | E-mail Address |
| Attn: Betty L. Parker, Sr. Director, Real Estate | |
| Owner Name (Please Print) | Property PIN or Deed Book & Page # |
| Phone | E-mail Address |
| Owner Name (Please Print) | Property PIN or Deed Book & Page # |
| Phone | E-mail Address |

### Surveyor Information

Surveyor: Dewberry Engineers, Inc

Phone: 919-424-3715 Fax: 919-881-9923

E-mail Address: ahales@dewberry.com

### Annexation Summary Chart

| | | | |
|---|---|---|---|
| Total Acreage to be annexed: | 68.06 | Reason for annexation: (select one) | |
| Population of acreage to be annexed: | vacant parcel | Receive Town Services | x |
| Existing # of housing units: | 0 | Other (please specify) | |
| Zoning District*: | MD-CZ | | |

*If the property to be annexed is not within the Town of Apex's Extraterritorial Jurisdiction, the applicant must also submit a rezoning application with the petition for voluntary annexation to establish an Apex zoning designation. Please contact the Planning Department for questions.

## PETITION FOR VOLUNTARY ANNEXATION

Application #: 700 Submittal Date: 11/2/2020

### COMPLETE IF SIGNED BY INDIVIDUALS:

All individual owners must sign. (If additional signatures are necessary, please attach an additional sheet.)

| Please Print | Signature |
|---|---|
| Please Print | Signature |
| Please Print | Signature |
| Please Print | Signature |

STATE OF NORTH CAROLINA
COUNTY OF WAKE

Sworn and subscribed before me, _____, a Notary Public for the above State and County, this the _____day of, _____, 20____.

_____
Notary Public

SEAL

My Commission Expires: _____

### COMPLETE IF A CORPORATION:

In witness whereof, said corporation has caused this instrument to be executed by its President and attested by its Secretary by order of its Board of Directors, this the 15th day of October, 20 20.

Corporate Name: The Wake County Board of Education

SEAL

By: _____
Betty L. Parker ~~-President (Signature)~~
Sr. Director, Real Estate Services, WCPSS, for and on behalf of the Wake County Board of Education pursuant to duly delegated authority.

Attest: _____
~~Secretary (Signature)~~
Sr. Director, Real Estate Services, WCPSS, for and on behalf of the Wake County Board of Education pursuant to duly delegated authority.

STATE OF NORTH CAROLINA
COUNTY OF WAKE

Sworn and subscribed before me, Margaret Sutter, a Notary Public for the above State and County, this the 15th day of October, 20 20.

_____
Notary Public

SEAL

MARGARET SUTTER
NOTARY PUBLIC
WAKE COUNTY, NC
My Commission Expires 5/7/2022

My Commission Expires: 5/7/2022

## Town of Apex Satellite Annexation Legal Description: PIN 0750-54-5646

**(WCPSS: Felton Grove High School, 8550 Stephenson Road, Apex, NC 27539)**

**BEGINNING** AT AN IRON SHANK AT THE NORTHEASTERN MOST CORNER OF THE SUBJECT PROPERTY; THENCE, S 00°52'15" W A DISTANCE OF 2337.40' TO AN IRON PIPE; THENCE, S 86°51'34" W A DISTANCE OF 1224.63' TO AN IRON PIPE WITH CAP AND TACK; THENCE, N 02°01'22" W A DISTANCE OF 632.89' TO A 36" OAK STUMP; THENCE, N 01°19'50" E A DISTANCE OF 1795.11' TO AN IRON PIPE; THENCE, S 88°56'30" E A DISTANCE OF 1239.18' TO THE **POINT OF BEGINNING**, CONTAINING 68.06 ACRES MORE OR LESS.



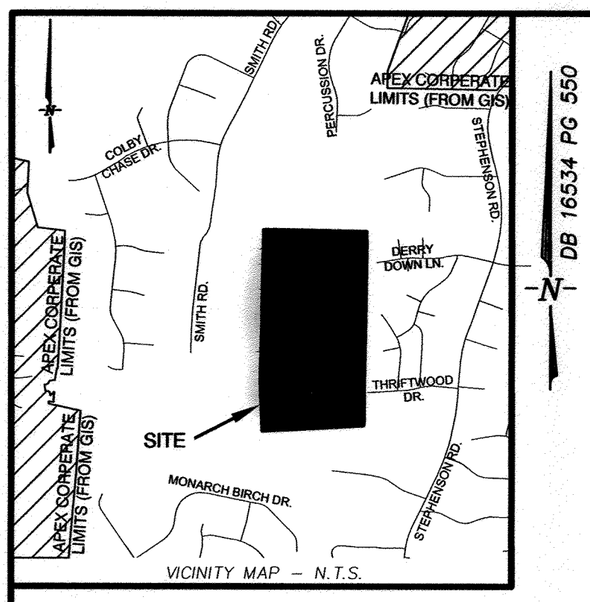


DB 16534 PG 550

I, ADAM C. HALES, CERTIFY THAT THIS PLAT WAS DRAWN UNDER MY SUPERVISION AND THAT THE INFORMATION SHOWN ON THIS PLAT IS NOT FROM AN ACTUAL GROUND SURVEY. ALL INFORMATION IS TAKEN FROM DEEDS, PLATS AND GIS INFORMATION. THE PURPOSE OF THIS MAP IS TO SERVE AS AN ILLUSTRATIVE AID OF THE PROPOSED ANNEXATION OF LAND INTO THE TOWN OF APEX CORPORATE LIMITS.

WITNESS MY ORIGINAL SIGNATURE, REGISTRATION LICENSE NUMBER AND SEAL THIS 16TH DAY OF NOVEMBER, A.D., 2020.

PROFESSIONAL LAND SURVEYOR LICENSE # L-4980

NORTH CAROLINA PROFESSIONAL SEAL L-4980 LAND SURVEYOR ADAM C. HALES

**NOTES:**

1. THIS MAP IS EXEMPT FROM NCGS 47-30 MAPPING REQUIREMENTS PER NCGS 47-30 PARAGRAPH (J).
2. THE PURPOSE OF THIS MAP IS TO SERVE AS AN ILLUSTRATIVE AID OF THE PROPOSED ANNEXATION OF LAND INTO THE TOWN OF APEX.
3. APEX CORPORATE LIMITS PROVIDED BY TOWN OF APEX, GIS DEPARTMENT.
4. IT IS THE INTENTION THAT THE ANNEXATION BOUNDARY IS TO FOLLOW THE TITLE BOUNDARY OF THE PARCEL SHOWN HEREON.

ANNEXATION #_____.

I, DONNA B. HOSCH, MMC, NCCMC, TOWN CLERK, APEX, NORTH CAROLINA CERTIFY THIS A TRUE AND EXACT MAP OF ANNEXATION ADOPTED THE ____ DAY OF _____, 20____, BY THE TOWN COUNCIL. I SET MY HAND AND SEAL OF THE TOWN OF APEX, _____
DAY/MONTH/YEAR

_____.
DONNA B. HOSCH, MMC, NCCMC, TOWN CLERK

–Seal–

**LEGAL DESCRIPTION**

BEGINNING AT AN IRON SHANK AT THE NORTHEASTERN MOST CORNER OF THE SUBJECT PROPERTY; THENCE, S 00°52'15" W A DISTANCE OF 2337.40' TO AN IRON PIPE; THENCE, S 86°51'34" W A DISTANCE OF 1224.63' TO AN IRON PIPE WITH CAP AND TACK; THENCE, N 02°01'22" W A DISTANCE OF 632.89' TO A 36" OAK STUMP; THENCE, N 01°19'50" E A DISTANCE OF 1795.11' TO AN IRON PIPE; THENCE, S 88°56'30" E A DISTANCE OF 1239.18' TO THE POINT OF BEGINNING, CONTAINING 68.06 ACRES MORE OR LESS.

**REFERENCES**

1. JOHNIE M. DEW & BESSIE W. DEW
   DB 3265 PG 799
   BM 1983 PG 1064
   PIN: 0750-63-2916
2. JOHNIE M. DEW & BESSIE W. DEW
   DB 3265 PG 799
   BM 1983 PG 1064
   PIN: 0750-63-1918
3. JOHNIE M. DEW & BESSIE W. DEW
   DB 3265 PG 799
   BM 1983 PG 1064
   PIN: 0750-54-9090
4. JOHNIE M. DEW & BESSIE W. DEW
   DB 4952 PG 240
   BM 1983 PG 1064
   PIN: 0750-53-8989

JASON G. EMERY & JOANNA L. EMERY
DB 10299 PG 2534
BM 1978 PG 723
PIN: 0750-46-6564

RONALD D. SCOTT & MELODY S. SCOTT
DB 2689 PG 470
BM 1978 PG 723
PIN: 0750-46-6110

DAVIS B. CHAMBLEE & LEANNE M. CHAMBLEE
DB 14545 PG 1437
BM 1978 PG 723
PIN: 0750-45-6507

REVOCABLE LIVING TRUST OF DENNIS MCCOY AND RANDY GARREN
DB 13020 PG 135
BM 1982 PG 529
PIN: 0750-45-6175

CURRIN BROS., INC.
DB 6000 PG 178
BM 1994 PG 161
PIN: 0750-44-1160

JOSEPH W. DEAN & CHRISTINE W. DEAN
DB 2600 PG 666
BM 1978 PG 159
PIN: 0750-57-6147

BRIARTAC FAMILY, LLC.
DB 13812 PG 334
BM 1986 PG 2149
PIN: 0750-65-7552

AQUA NORTH CAROLINA
DB 13547 PG 76
BM 1986 PG 214
PIN: 0750-66-30

BRIARTAC FAMILY, LLC.
DB 13812 PG 334
BM 1986 PG 2149
PIN: 0750-65-2582

BRIARTAC FAMILY, LLC.
DB 13812 PG 334
BM 1986 PG 2149
PIN: 0750-64-2452

CURRIN BROS., INC.
DB 6000 PG 178
BM 1994 PG 161
PIN: 0750-44-1160

IPF 1"

2.75" IRON SHANK

36" OAK STUMP

IPF 1" W/ CAP & TACK

S 88°56'30" E
1239.18'

N 01°19'50" E
1795.11'

S 00°52'15" W
2337.40'

N 02°01'22" W
632.89'

S 86°51'34" W
1224.63'

DERRY DOWN LN.
60' PUBLIC R/W

CHERRYSTONE LN.
(PRIVATE)

CARLOTTA CT.
(PRIVATE)

THRIFTWOOD DR.
60' PUBLIC R/W

**PROPOSED ANNEXATION AREA**

**WAKE COUNTY BOARD OF EDUCATION**
**DB 16534 PG 550**
**PIN: 0750-54-5646**

**2,964,732.34 SQ. FT (68.06 ACRES)**
**ACREAGE COMPUTED PER COORDINATE METHOD**

GRAPHIC SCALE

150 0 75 150 300 600

( IN FEET )
1 inch = 150 ft.

RECORDED IN BOOK OF MAPS_____ PAGE_____ WAKE COUNTY DEED REGISTRY

| REVISIONS | | | | | |
|---|---|---|---|---|---|
| No. | DATE | BY | DESCRIPTION | DATE: | 11/16/20 |
| | | | | DRAWN BY: | GJD |
| | | | | APPROVED BY: | ACH |
| | | | | CHECKED BY: | ACH |
| | | | | PROJECT #: | 50103124 |
| | | | | SCALE: | 1" = 150' |
| | | | | SHEET #: | 1 OF 1 |

# SATELLITE ANNEXATION MAP for the TOWN OF APEX

PROPERTY OF

## THE WAKE COUNTY BOARD OF EDUCATION
## FELTON GROVE HIGH SCHOOL (H-12)

8550 STEPHENSON ROAD, APEX, NC 27539
WHITE OAK TOWNSHIP, WAKE COUNTY, NORTH CAROLINA

Dewberry

Dewberry Engineers Inc.
2301 REXWOODS DRIVE
SUITE 200
RALEIGH, NC 27607
PHONE: 919.881.9939
FAX: 919.881.9923
NCBELS #F-0929


Annexation #700
Colby Crossing
Miramonte
Merion
Merion Station Dr
Lianfair Ln
Smith Rd
Harmony Glen
Summer Ridge Ct
Derry Down Ln
Briarwood Farms COSD
Westford Way
Stephenson Rd
Brook Cross Dr
Cherrystone Ln
Lynnford Dr
Briarwood Farms
Thriftwood Dr
Coralberry Cir
Holly Brook Dr
Indian Hills
Saponi Hills
Arrowhead Dr
Banview Ln
Fair Oaks
0
500
1,000
Feet
November, 2020
September, 2020 Aerial Photography
Prepared by: Town of Apex Planning Department

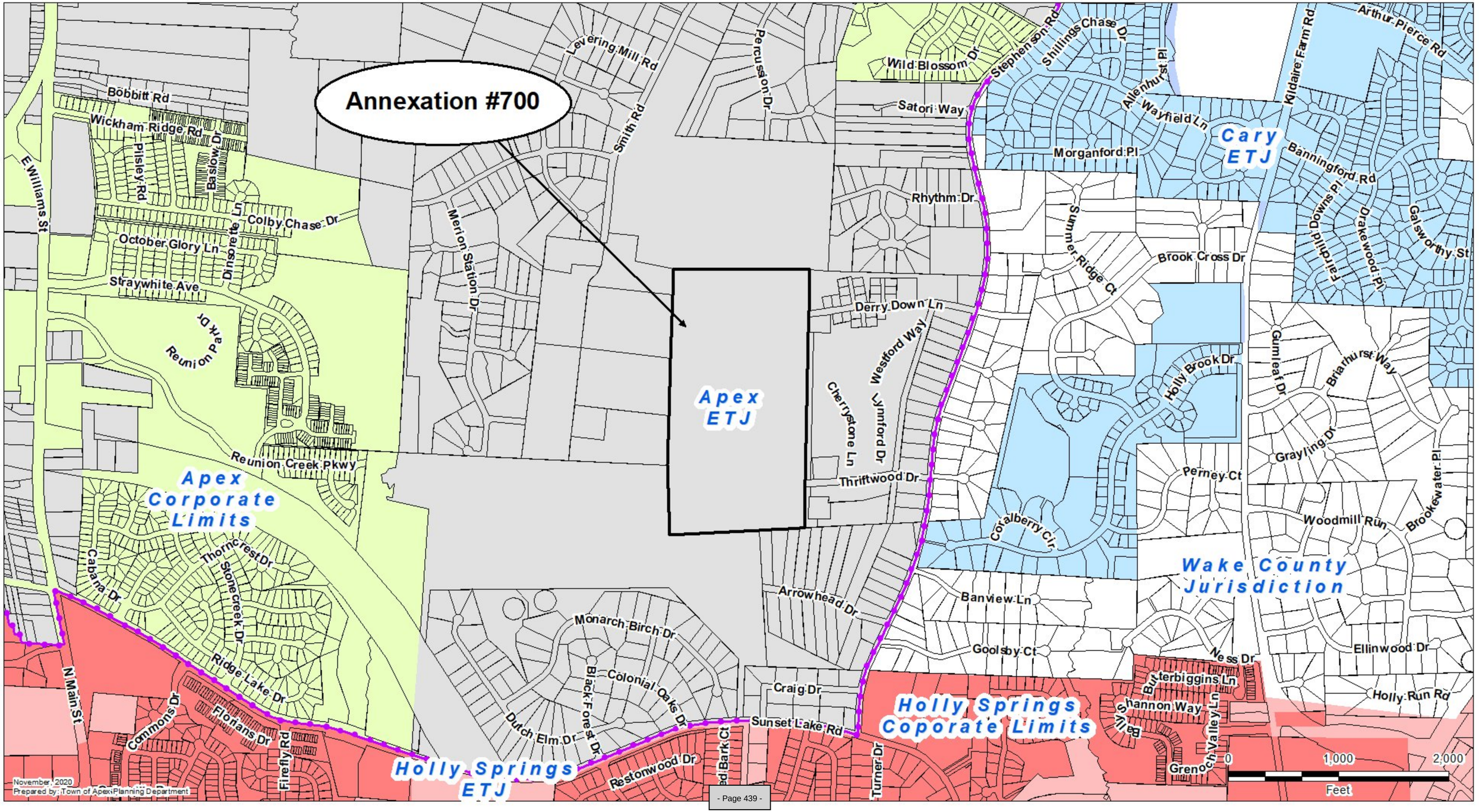
Annexation #700
Apex ETJ
Apex Corporate Limits
Cary ETJ
Wake County Jurisdiction
Holly Springs Coporate Limits
Holly Springs ETJ
Bobbitt Rd
Wickham Ridge Rd
Pisley Rd
Basiow Dr
E Williams St
Colby Chase Dr
October Glory Ln
Straywhite Ave
Reunion Park Dr
Reunion Creek Pkwy
Cabana Dr
Thorncrest Dr
Stonecreek Dr
Ridge Lake Dr
N Main St
Commons Dr
Florians Dr
Firefly Rd
Levering Mill Rd
Smith Rd
Percussion Dr
Merion Station Dr
Wild Blossom Dr
Satori Way
Stephenson Rd
Shillings Chase Dr
Allenhurst Pl
Wayfield Ln
Morganford Pl
Kildaire Farm Rd
Arthur Pierce Rd
Banningford Rd
Downs Pl
Fairchild Pl
Drakewood Pl
Galsworthy St
Rhythm Dr
Summer Ridge Ct
Brook Cross Dr
Derry Down Ln
Westford Way
Cherrystone Ln
Lynnford Dr
Thriftwood Dr
Holly Brook Dr
Gumleaf Dr
Briarhurst Way
Grayling Dr
Perney Ct
Brookewater Pl
Woodmill Run
Coralberry Cir
Arrowhead Dr
Banview Ln
Goolsby Ct
Ness Dr
Ellinwood Dr
Holly Run Rd
Butterbiggins Ln
Shannon Way
Bailys Valley Ln
Grenoch Valley Ln
Monarch Birch Dr
Colonial Oaks Dr
Black Forest Dr
Dutch Elm Dr
Craig Dr
Sunset Lake Rd
Restonwood Dr
Red Bark Ct
Turner Dr
0
1,000
2,000
Feet
November, 2020
Prepared by: Town of Apex Planning Department

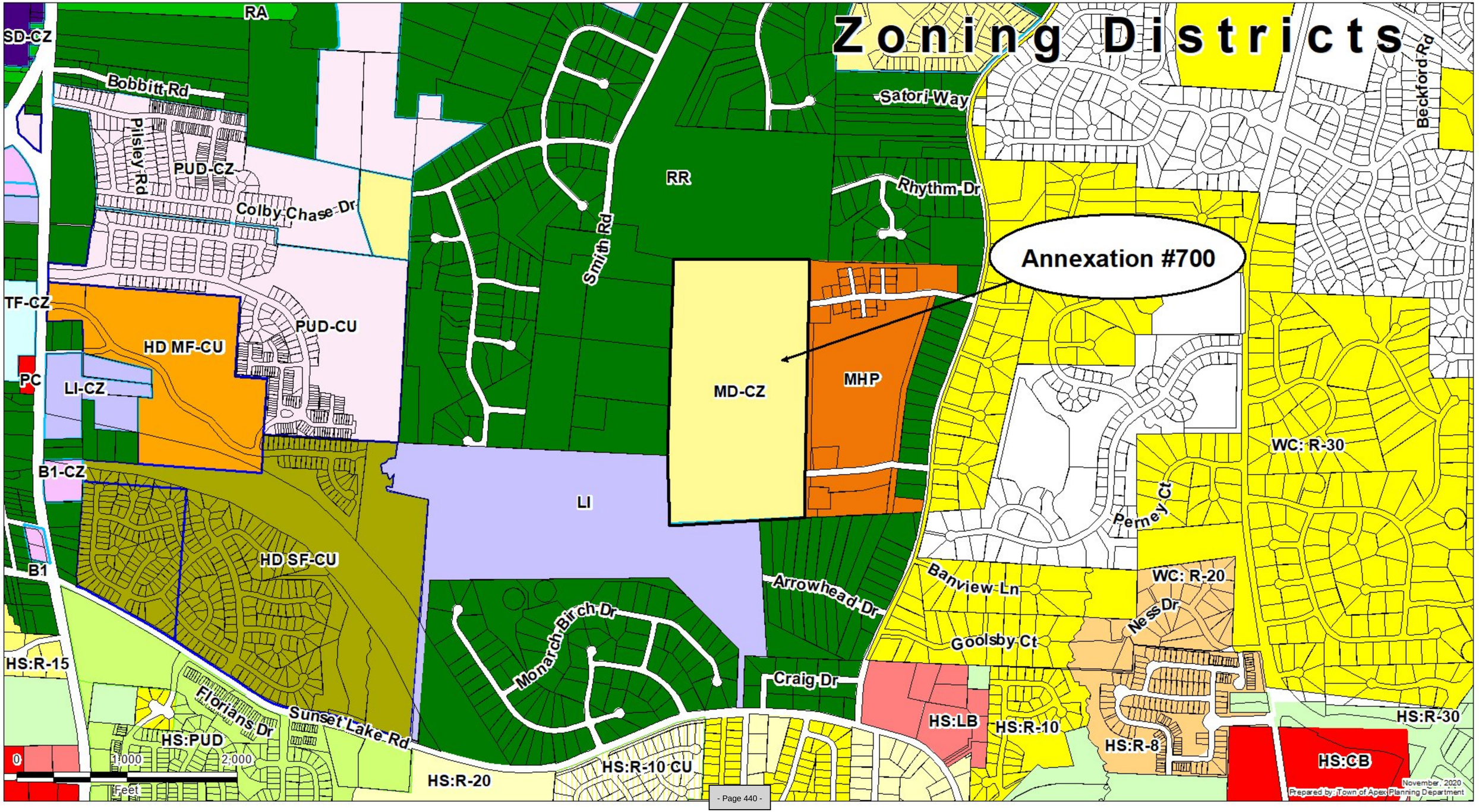
Zoning Districts
Annexation #700
RA
SD-CZ
Bobbitt Rd
Pisley Rd
PUD-CZ
Colby Chase Dr
RR
Smith Rd
Satori Way
Rhythm Dr
Beckford Rd
TF-CZ
PUD-CU
HD MF-CU
PC
LI-CZ
MD-CZ
MHP
B1-CZ
LI
WC: R-30
Perney Ct
HD SF-CU
B1
Arrowhead Dr
Banview Ln
WC: R-20
Ness Dr
Goolsby Ct
Monarch Birch Dr
Craig Dr
HS:R-15
Florians Dr
Sunset Lake Rd
HS:LB
HS:R-10
HS:R-30
HS:R-8
HS:PUD
HS:R-10 CU
HS:R-20
HS:CB
0
1,000
2,000
Feet
November, 2020
Prepared by: Town of Apex Planning Department

# | Agenda Item | cover sheet

for consideration by the Apex Town Council

Item Type: PUBLIC HEARING

Meeting Date: March 23, 2021

## Item Details

Presenter(s): Liz Loftin, Senior Planner

Department(s): Planning and Community Development

Requested Motion

Public hearing and possible motion to adopt an Ordinance on the Question of Annexation – Apex Town Council's intent to annex Edwin A. Goodwin, Testamentary Trust/Judy G. Hackney, Trustee (Hackney Tracts) property containing 2.867 acres located at 2600 Olive Chapel Road, Annexation #701 into the Town's corporate limits.

Approval Recommended?

Yes, by the Planning and Community Development Department.

Item Details

The Town Clerk certifies to the investigation of said annexation.

Attachments

- Annexation Ordinance
- Annexation Petition
- Legal Description
- Preliminary Plat

TOWN OF APEX, NORTH CAROLINA
Municipality No. 333

**After recording, please return to:**
**Donna Hosch, MMC, NCCMC, Town Clerk**
**Town of Apex**
**P.O. Box 250**
**Apex, NC 27502**

ORDINANCE NO. 2021-0323-10
ANNEXATION PETITION NO. #701
Edwin A. Goodwin Testamentary Trust and Judy G. Hackney, Trustee (Hackney Tracts)

AN ORDINANCE TO EXTEND THE CORPORATE LIMITS
OF THE TOWN OF APEX, NORTH CAROLINA
P.O. Box 250, Apex, North Carolina 27502

WHEREAS, the Apex Town Council has been petitioned under G.S.§160A-31, as amended, to annex the area described herein; and

WHEREAS, the Apex Town Council has by Resolution directed the Town Clerk to investigate the sufficiency of said petition; and

WHEREAS, the Town Clerk has certified the sufficiency of said petition and a public hearing on the question of this annexation was held at Apex Town Hall at 6:00 p.m. on March 23, 2021 after due notice by posting to the Town of Apex website, http://www.apexnc.org/news/public-notices-legal-ads; and

WHEREAS, the Apex Town Council does hereby find as a fact that said petition meets the requirements of G.S.§160A-31, as amended.

NOW, THEREFORE, BE IT ORDAINED by the Town Council of Apex, North Carolina:

Section 1. By virtue of the authority granted by G.S.§160A-31, as amended, the territory described in the attached property description and also shown as "Annexation Area" on the below identified survey plat is hereby annexed and made part of the Town of Apex, North Carolina, as of the date of adoption of this Ordinance on March 25, 2021. The survey plat that describes the annexed territory is that certain survey plat entitled Insert "Annexation Map for the Town of Apex., WithersRavenel Engineers, Planners, Surveyors dated November 2, 2020" and recorded in Book of Maps book number 2021 and page number , Wake County Registry.

Section 2. Upon and after the adoption of this ordinance, the territory described herein and its citizens and property shall be subject to all debts, laws, ordinances and regulations in force in the Town of Apex, North Carolina, and shall be entitled to the same privileges and benefits as other parts of the Town of Apex. Said territory shall be subject to municipal taxes according to G.S.§160A-58.10, as amended.

Section 3. The Clerk of the Town of Apex, North Carolina shall cause to be recorded in the Office of the Register of Deeds of Wake County and in the Office of the Secretary of State at Raleigh, North Carolina and in the Office of the Wake County Board of Elections an accurate map of the annexed territory, described in Section 1 hereof, together with a duly certified copy of this Ordinance.

Adopted this the 25th day of March 2021.

_____
Jacques K. Gilbert
Mayor

ATTEST:

_____
Donna B. Hosch, MMC, NCCMC
Town Clerk

APPROVED AS TO FORM:

_____
Laurie L. Hohe
Town Attorney

Legal Description

Beginning at an Existing Iron Pipe Located on the Northern Right of Way of Olive Chapel Road (SR#1160) and having North Carolina Grid Coordinates (NAD83, 2011), N: 719,361.07', E: 2,023,999.59'; said Iron Pipe also being the Southeast corner of Common Area 2, "Haley at Smith Farms", Book of Maps 2018, Page 934, Wake County Registry. Thence leaving said Right of Way, North 02°31'13" East, 385.44' to a point, Thence South 62°35'47" East, 49.52' to a point, Thence South 64°57'29" East, 454.32' to a point, Thence South 44°47'18" East, 40.09' feet to a point located in the centerline of Olive Chapel Road,
Thence South 70°19'56" West, 26.36' feet to a point in the centerline of the road, Thence South 01°02'11" West, 37.60' feet to a point located on the Southern Right of Way of Olive Chapel Road, Thence continuing along the Right of Way of Olive Chapel Road, South 70°23'37" West, 98.86' feet to a point, Thence South 70°22'07" West, 100.00' feet to a point, Thence South 70°21'56" West, 214.57' feet to a point, Thence North 03°31'36" West, 5.21' feet to a point, Thence South 70°19'30" West, 94.12' feet to a point, Thence Leaving the Southern Right of Way of Olive Chapel Road North 02°31'13" East, 32.27' feet to a point, Thence North 02°31'13" East, 32.69' feet to a point, Thence North 02°31'13" East, 5.41' feet to an Existing Iron Pipe, the point and place of Beginning and containing an area of 2.867 Acres, (124,897 sf), more or less.

STATE OF NORTH CAROLINA

COUNTY OF WAKE

CLERK'S CERTIFICATION

I, Donna B. Hosch, MMC, NCCMC, Town Clerk, Town of Apex, North Carolina, do hereby certify the foregoing is a true and correct copy of Annexation Ordinance No. 2021-0323-10, adopted at a meeting of the Town Council, on the 25th day of March, 2021, the original of which will be on file in the Office of the Town Clerk of Apex, North Carolina.

IN WITNESS WHEREOF, I have hereunto set my hand and affixed the official Seal of the Town of Apex, North Carolina, this the 26th day of March 2021.

_____
Donna B. Hosch, MMC, NCCMC
Town Clerk

(SEAL)

## PETITION FOR VOLUNTARY ANNEXATION

This document is a public record under the North Carolina Public Records Act and may be published on the Town's website or disclosed to third parties.

Application #: 701 Submittal Date: 11/2/2020

Fee Paid $ 200.00 Check # Visa

## TO THE TOWN COUNCIL APEX, NORTH CAROLINA

1. We, the undersigned owners of real property, respectfully request that the area described in Part 4 below be annexed to the Town of Apex, Wake County, North Carolina.
2. The area to be annexed is ☒ contiguous, ☐ non-contiguous (satellite) to the Town of Apex, North Carolina and the boundaries are as contained in the metes and bounds description attached hereto.
3. If contiguous, this annexation will include all intervening rights-of-way for streets, railroads and other areas as stated in G.S. 160A-31(f), unless otherwise stated in the annexation amendment.

## Owner Information

Edwin A. Goodwin Testamentary Trust — Owner Name (Please Print)

0721492629 — Property PIN or Deed Book & Page #

913-362-7372 — Phone

E-mail Address

Judy G. Hackney, Trustee — Owner Name (Please Print)

c/o the Edwin A. Goodwin Testamentary Trust — Property PIN or Deed Book & Page #

Phone

E-mail Address

Owner Name (Please Print)

Property PIN or Deed Book & Page #

Phone

E-mail Address

## Surveyor Information

Surveyor: WithersRavenel

Phone: Fax:

E-mail Address:

## Annexation Summary Chart

| Property Information | | Reason(s) for annexation (select all that apply) | |
|---|---|---|---|
| Total Acreage to be annexed: | 2.867 | Need water service due to well failure | ☐ |
| Population of acreage to be annexed: | 0 ac. | Need sewer service due to septic system failure | ☐ |
| Existing # of housing units: | 0 | Water service (new construction) | ☑ |
| Proposed # of housing units: | Approx. 5 | Sewer service (new construction) | ☑ |
| Zoning District*: | R-80W | Receive Town Services | ☑ |

*If the property to be annexed is not within the Town of Apex's Extraterritorial Jurisdiction, the applicant must also submit a rezoning application with the petition for voluntary annexation to establish an Apex zoning designation. Please contact the Planning Department at 919-249-3426 for questions.

## PETITION FOR VOLUNTARY ANNEXATION

Application #: 701 Submittal Date: 11/2/2020

### COMPLETE IF SIGNED BY INDIVIDUALS:

All individual owners must sign. (If additional signatures are necessary, please attach an additional sheet.)

Judy G Hackney, Trustee of — Judy G. Hackney - Trustee
Please Print — Signature

the Edwin A. Goodwin Testamentary Trust
Please Print — Signature

Please Print — Signature

Please Print — Signature

STATE OF NORTH CAROLINA
COUNTY OF WAKE

Sworn and subscribed before me, Paul Stam, a Notary Public for the above State and County, this the 27 day of October, 2020.

Notary Public

SEAL

PAUL STAM NOTARY PUBLIC My Commission Expires 05-08-2024 WAKE COUNTY, NC

My Commission Expires: May 8 2024

### COMPLETE IF A CORPORATION:

In witness whereof, said corporation has caused this instrument to be executed by its President and attested by its Secretary by order of its Board of Directors, this the _____ day of _____, 20_____.

Corporate Name _____

SEAL

By: _____
President (Signature)

Attest:

_____
Secretary (Signature)

STATE OF NORTH CAROLINA
COUNTY OF WAKE

Sworn and subscribed before me, _____, a Notary Public for the above State and County, this the _____day of _____, 20____.

_____
Notary Public

SEAL

My Commission Expires: _____

Hackney Annexation Legal Description

**Beginning** at an Existing Iron Pipe Located on the Northern Right of Way of Olive Chapel Road (SR#1160) and having North Carolina Grid Coordinates (NAD83, 2011), N: 719,361.07', E: 2,023,999.59'; said Iron Pipe also being the Southeast corner of Common Area 2, "Haley at Smith Farms", Book of Maps 2018, Page 934, Wake County Registry. Thence leaving said Right of Way, North 02°31'13" East, 385.44' to a point, Thence South 62°35'47" East, 49.52' to a point, Thence South 64°57'29" East, 454.32' to a point, Thence South 44°47'17" East, 40.09' feet to a point located in the centerline of Olive Chapel Road, Thence South 70°19'56" West, 26.36' feet to a point in the centerline of the road, Thence South 01°02'11" West, 37.60' feet to a point located on the Southern Right of Way of Olive Chapel Road, Thence continuing along the Right of Way of Olive Chapel Road, South 70°23'37" West, 98.86' feet to a point, Thence South 70°22'07" West, 100.00' feet to a point, Thence South 70°21'56" West, 214.57' feet to a point, Thence North 03°31'36" West, 5.21' feet to a point, Thence South 70°19'30" West, 94.12' feet to a point, Thence Leaving the Southern Right of Way of Olive Chapel Road North 02°31'13" East, 32.27' feet to a point, Thence North 02°31'13" East, 32.69' feet to a point, Thence North 02°31'13" East, 5.41' feet to an Existing Iron Pipe, the point and place of **Beginning** and containing an area of 2.867 Acres, (124,897 sf), more or less.

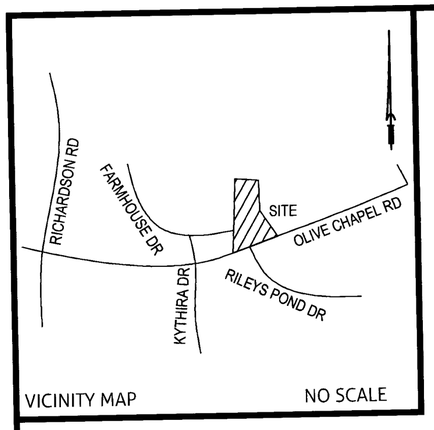


VICINITY MAP NO SCALE

PIN No. 0722411102
JUDY G. HACKNEY
DB 1400, PG 236
BM 1983, PG 57

PIN No. 0722406699
CHARLES L. HACKNEY
JUDY G. HACKNEY
DB 3195, PG 151
BM 1982, PG 1057

N.C. GRID NORTH NAD 83(2011)

S 85°35'51" E
339.02'

PT

N 02°31'45" E
382.15'

S 00°56'41" E
436.43'

POND

PIN No. 0721492629
JUDY G. HACKNEY, TRUSTEE OF THE
EDWIN A. GOODWIN TESTAMENTARY
TRUST
DB 3195, PG 149
BM 1983, PG 57
9.526 ACRES (OUTSIDE R/W)
0.481 ACRES (WITHIN R/W)
10.007 (TOTAL ACRES)
ADDRESS: 2600 OLIVE CHAPEL ROAD

PIN No. 0722411102
JUDY G. HACKNEY
DB 1400, PG 236
BM 1983, PG 57

TOWN OF APEX CORPORATE LIMITS (OUT) (IN) EIP

ROWBOAT ROAD
50' PUBLIC RIGHT OF WAY
BM 2018, PG 934

N 02°31'13" E
288.73'

SMITH FARMS OF APEX
HOMEOWNERS ASSOCIATION, INC.
DB 17177, PG 741
COMMON AREA 3
HALEY AT SMITH FARMS
BM 2018, PG 934
PIN No. 0722309093

PT S 62°35'47" E
49.52'

PT

PROPOSED CORPORATE LIMITS
S 64°57'29" E
454.32'

PT

S 34°12'20" E
445.67'

| LINE TABLE | | |
|---|---|---|
| LINE | DIRECTION | DISTANCE |
| L1 | S 44°47'18" E | 6.65' |
| L2 | S 44°47'18" E | 33.43' |
| L3 | S 70°19'56" W | 26.36' |
| L4 | S 01°02'11" W | 37.60' |
| L5 | N 03°31'36" W | 5.21' |
| L6 | N 02°31'13" E | 32.27' |
| L7 | N 02°31'13" E | 32.69' |
| L8 | N 02°31'13" E | 5.41' |
| L9 | S 34°12'20" E | 31.27' |

PT

S 70°19'56" W
175.55'

TOWN OF APEX CORPORATE LIMITS (OUT) (IN)

PT

S 70°19'56" W
169.20'

PT

FARMHOUSE DRIVE
50' PUBLIC RIGHT OF WAY
BM 2018, PG 934

N 02°31'13" E
385.44'

ANNEXATION AREA
(HATCHED AREA)
2.867 ACRES
124,897 SF

SMITH FARMS OF APEX HOMEOWNERS
ASSOCIATION, INC.
DB 17177, PG 741
COMMON AREA 2
HALEY AT SMITH FARMS
BM 2018, PG 934
PIN NO. 0721397362

POINT OF BEGINNING
EXISTING IRON PIPE
NC GRID COORDINATES
NAD 83(2011)
N: 719,361.07'
E: 2,023,999.59'

S 70°19'56" W
507.03'

S 70°19'56" W
533.57'

S 70°22'07" W
100.00'

S 70°23'37" W
96.86'

(OUT)

TOWN OF APEX CORPORATE LIMITS (IN)

RILEY'S POND DRIVE
50' PUBLIC RIGHT OF WAY

IPS

PT

S 70°19'30" W
94.12'

S 70°21'56" W
214.57'

TOWN OF APEX CORPORATE LIMITS (IN) (OUT)

OLIVE CHAPEL ROAD (SR#1160)
VARIABLE WIDTH PUBLIC RIGHT OF WAY

TOWN OF APEX CORPORATE LIMITS (IN) (OUT)

DRIVE
FT OF WAY

GENERAL NOTES
1. BASIS OF BEARINGS: NC STATE PLANE GRID COORDINATES, NAD83(2011).
2. ALL DISTANCES ARE HORIZONTAL GROUND DISTANCES IN U.S. SURVEY FEET UNLESS OTHERWISE NOTED.
3. AREAS SHOWN HEREON WERE COMPUTED USING THE COORDINATE METHOD.
4. LINES NOT SURVEYED ARE SHOWN AS BROKEN LINES FROM INFORMATION REFERENCED ON THE FACE OF THIS PLAT.
5. NO EVIDENCE OF EARTH MOVING WAS OBSERVED IN THE PROCESS OF CONDUCTING FIELDWORK ON SUBJECT PARCEL.
6. NO EVIDENCE OF RECENT STREET OR SIDEWALK CONSTRUCTION OR REPAIRS OBSERVED IN THE PROCESS OF CONDUCTING FIELDWORK.
7. NO EVIDENCE OF BURIAL GROUNDS WAS OBSERVED IN THE PROCESS OF CONDUCTING FIELDWORK.
8. SUBJECT PROPERTY IS NOT LOCATED WITHIN A FLOOD HAZARD AREA ACCORDING TO FLOOD INSURANCE RATE MAP 3720072200J DATED MAY 2, 2006.
8. IRON PIPES SET AT ALL CORNERS UNLESS OTHERWISE NOTED.

SURVEYOR'S CERTIFICATE
"I, BENJAMIN E. DAYTON, CERTIFY THAT THIS PLAT WAS DRAWN UNDER MY SUPERVISION FROM AN ACTUAL SURVEY MADE UNDER MY SUPERVISION (DEED DESCRIPTION RECORDED IN BOOK SEE MAP, PAGE _____, THAT THE BOUNDARIES NOT SURVEYED ARE CLEARLY INDICATED AS DRAWN FROM INFORMATION FOUND IN BOOK SEE MAP, PAGE ____; THAT THE RATIO OF PRECISION OR POSITIONAL ACCURACY AS CALCULATED IS 1:40,000+; THAT THIS PLAT WAS PREPARED IN ACCORDANCE WITH G.S. 47-30 AMENDED. WITNESS MY ORIGINAL SIGNATURE, LICENSE NUMBER AND SEAL THIS 23RD DAY OF NOVEMBER, A.D., 2020.

DocuSigned by:
Benjamin Dayton
3BBD04AE5AEB4E7...
BENJAMIN E. DAYTON, PLS L-4390

11/23/2020

NORTH CAROLINA PROFESSIONAL LAND SURVEYOR SEAL L-4390 BENJAMIN E. DAYTON

OWNER(s):
JUDY G. HACKNEY, TRUSTEE
OF THE EDWIN A. GOODWIN
TESTAMENTARY TRUST
2505 OLIVE CHAPEL ROAD
APEX, NC 27502

ANNEXATION #_____

"I, DONNA B. HOSCH, MMC, NCCMC, TOWN CLERK, APEX, NORTH CAROLINA CERTIFY THIS A TRUE AND EXACT MAP OF ANNEXATION ADOPTED THE _____ DAY OF _____, 20___, BY THE TOWN COUNCIL. I SET MY HAND AND SEAL OF THE TOWN OF APEX, _____
DAY/MONTH/YEAR

_____
DONNA B. HOSCH, MMC, NCCMC, TOWN CLERK

-SEAL-

## LEGEND

(EIP)-EXISTING IRON PIPE
(IPS)-IRON PIPE SET
(PT)-COMPUTED POINT (NO MONUMENT FOUND OR SET)
(FHYD)-FIRE HYDRANT
(WV)-WATER VALVE
(LP)-LIGHT POLE
(PP)-POWER POLE
(EPD)-ELECTRIC PEDESTAL
(WM)-WATER METER
(MB)-MAILBOX
(EOP)-EDGE OF PAVEMENT
(TLP)-TLELPHONE PEDESTAL
(SSMH)-SANITARY SEWER MANHOLE
(CMP)-CORRUGATED METAL PIPE
(RCP)-REINFORCED CONCRETE PIPE

80' 40' 0' 80' 160' 240'
SCALE IN FEET

REVISED 11-13-2020 - REVISE PIN NUMBER IN TITLE BLOCK

| | |
|---|---|
| DATE: 11/2/2020 | |
| SCALE: 1"=80' | |
| SURVEYED BY: AB | |
| DRAWN BY: BD | |
| CHECK & CLOSURE BY: BD | |
| CAD FILE: ANNEXATION PLAT.DWG | |
| PROJECT NO: 02180517.10 | |

ANNEXATION MAP for the TOWN OF APEX

# JUDY G. HACKNEY, TRUSTEE OF THE EDWIN A. GOODWIN TESTAMENTARY TRUST

| | | |
|---|---|---|
| TOWNSHIP: WHITE OAK | COUNTY: WAKE | STATE: NORTH CAROLINA |
| ZONE: RR and R-80W (PER GIS) | P.I.N. 0721492629 | |

WithersRavenel
Engineers | Planners | Surveyors
115 MacKenan Drive | Cary, NC 27511
t: 919.469.3340 | license #: C-0832 | www.withersravenel.com


Annexation #701
Smith Farm, Phase 1
Cornfield Aly
Great Lawn Rd
Everbloom Aly
Milkthistle Aly
Sunflower Rd
Barn Door Dr
Hayride Aly
Livestock Aly
Haley Farms
Rowboat Rd
Farmhouse Dr
Olive Chapel Rd
Arcadia West
Tinos Overlook Way
Kythira Dr
Thassos Dr
Lemnos Dr
Riley's Pond
Braden Overlook Ct
Rileys Pond Dr
Baxter Ridge Ct
November, 2020
September 2020 Aerial Photography
Prepared by: Town of Apex Planning Department
0
250
500
Feet

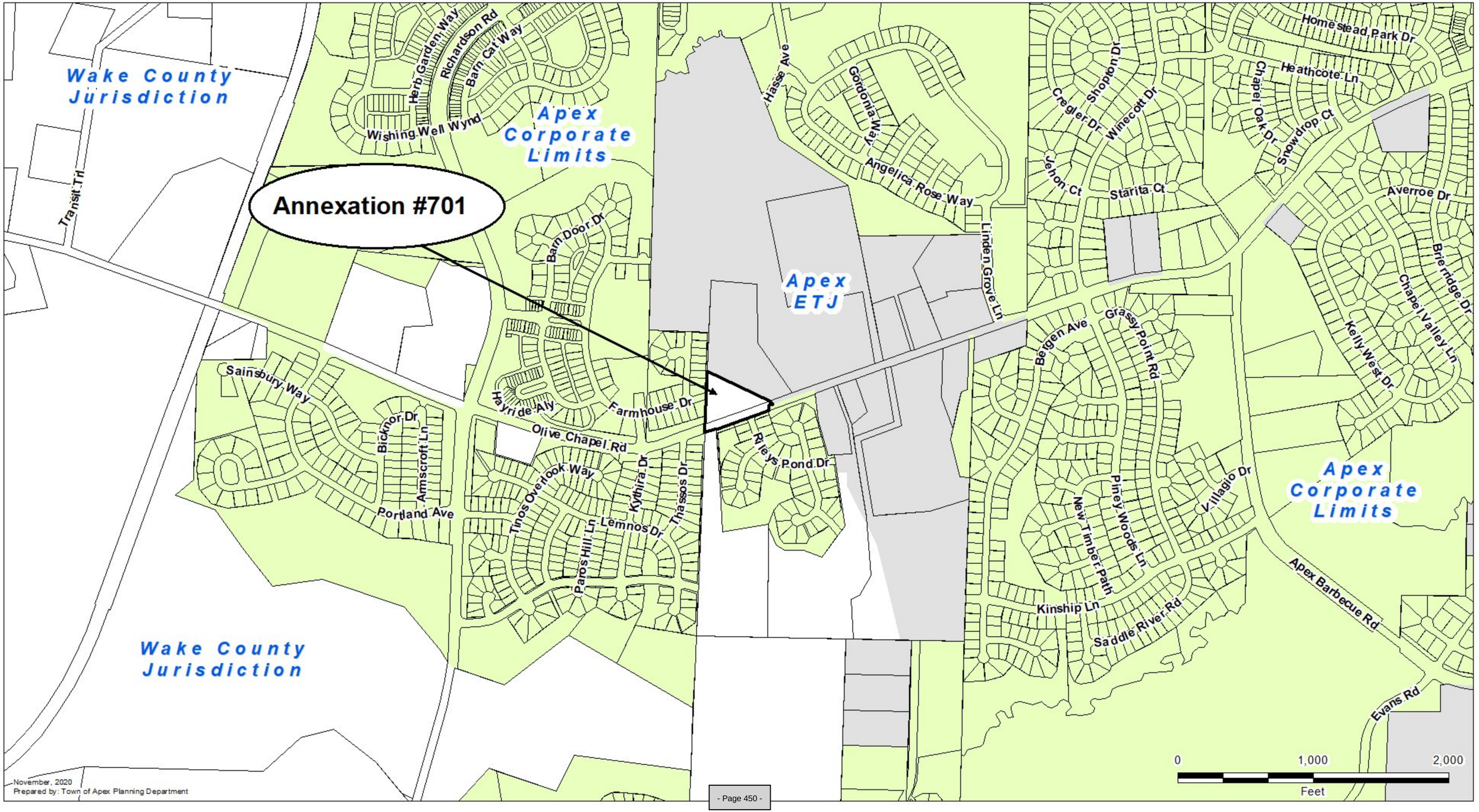
Annexation #701
Wake County Jurisdiction
Apex Corporate Limits
Apex ETJ
Wake County Jurisdiction
Apex Corporate Limits
Herb Garden Way
Richardson Rd
Barn Cat Way
Wishing Well Wynd
Transit Trl
Barn Door Dr
Hasse Ave
Gordonia Way
Angelica Rose Way
Linden Grove Ln
Homestead Park Dr
Heathcote Ln
Shopton Dr
Cregler Dr
Winecott Dr
Chapel Oak Dr
Snowdrop Ct
Jenon Ct
Starita Ct
Averroe Dr
Bridge Dr
Chapel Valley Ln
Kelly West Dr
Bergen Ave
Grassy Point Rd
Sainsbury Way
Bicknor Dr
Armscroft Ln
Portland Ave
Hayride Aly
Farmhouse Dr
Olive Chapel Rd
Riley's Pond Dr
Tinos Overlook Way
Kythira Dr
Thassos Dr
Paros Hill Ln
Lemnos Dr
New Timber Path
Piney Woods Ln
Villagio Dr
Kinship Ln
Saddle River Rd
Apex Barbecue Rd
Evans Rd
0
1,000
2,000
Feet
November, 2020
Prepared by: Town of Apex Planning Department

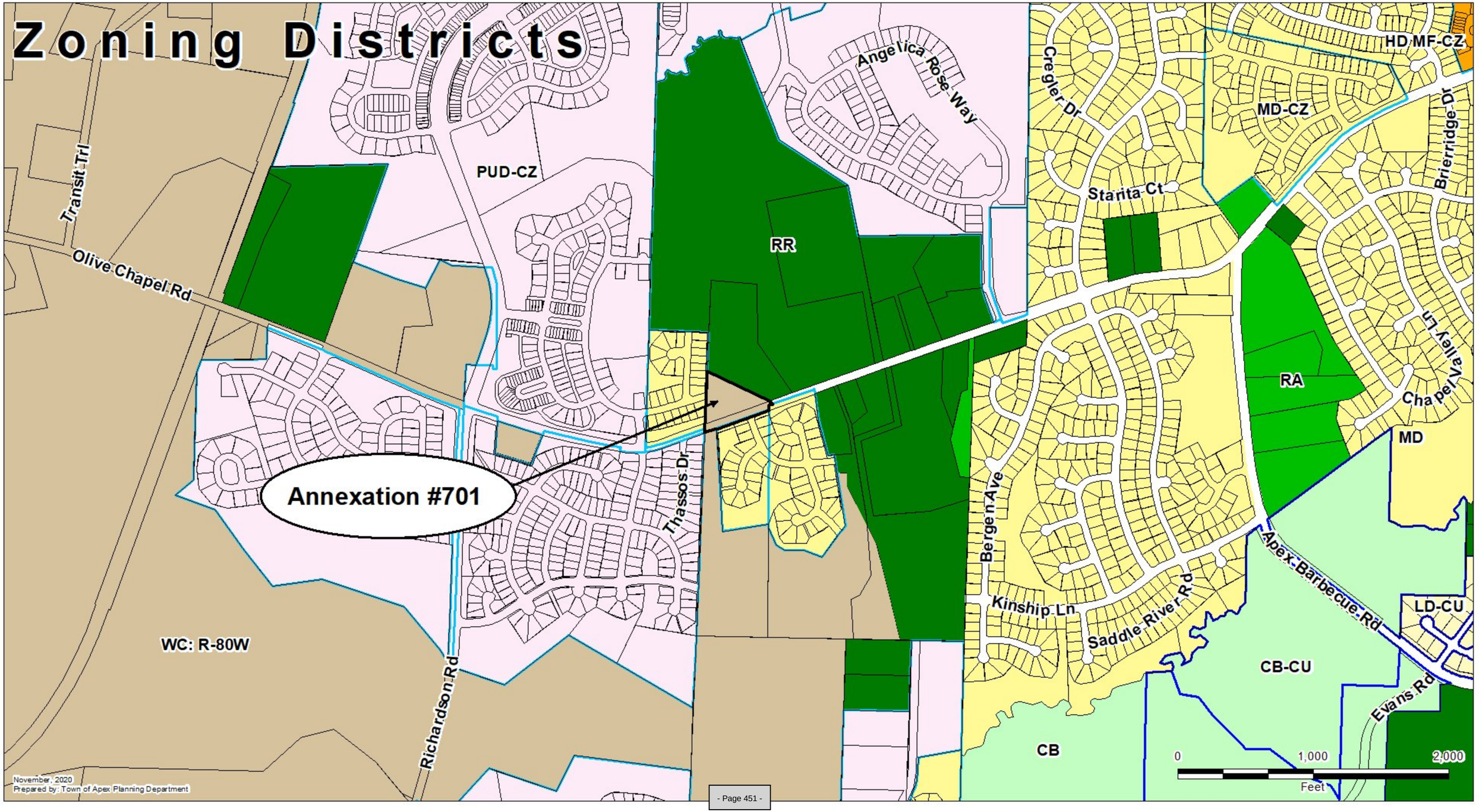
Zoning Districts
Transit Trl
Olive Chapel Rd
PUD-CZ
RR
Angelica Rose Way
Cregler Dr
HD MF-CZ
MD-CZ
Brierridge Dr
Starita Ct
Chapel Valley Ln
RA
MD
Annexation #701
Thassos Dr
Bergen Ave
Kinship Ln
Saddle River Rd
Apex Barbecue Rd
LD-CU
CB-CU
Evans Rd
CB
WC: R-80W
Richardson Rd
0
1,000
2,000
Feet
November, 2020
Prepared by: Town of Apex Planning Department

# | Agenda Item | cover sheet

for consideration by the Apex Town Council

Item Type: PUBLIC HEARING

Meeting Date: March 23, 2021

## Item Details

Presenter(s): Liz Loftin, Senior Planner

Department(s): Planning and Community Development

Requested Motion

Public Hearing and possible motion to approve Rezoning Application #20CZ14 Hackney PUD and Ordinance. The applicant, Brendie Vega, WithersRavenel, seeks to rezone approximately 79.79 acres located at 0, 2500, and 2600 Olive Chapel Road (PINs 0721492629, 0722406699, & 0722411102) from Rural Residential (RR) and Wake County R-80W to Planned Unit Development-Conditional Zoning (PUD-CZ).

Approval Recommended?

The Planning and Community Development Department recommends approval.

The Planning Board held a Public Hearing on March 8, 2021 and voted to recommend approval, with the conditions as offered by the applicant, by a vote of 6-0.

Item Details

Attachments

- Staff Report
- Vicinity Map
- Application
- Ordinance

All property owners and neighborhood associations within 300 feet of this rezoning have been notified per UDO Sec. 2.2.11 *Public Notification*.

## BACKGROUND INFORMATION:

**Location:** 0, 2500, & 2600 Olive Chapel Road
**Applicant/Agent:** Brendie Vega, WithersRavenel
**Owners:** Charles & Judy Hackney and Edwin Goodwin

## PROJECT DESCRIPTION:

**Acreage:** ±79.79 acres
**PINs:** 0721492629, 0722406699, & 0722411102
**Current Zoning**: Rural Residential (RR) & R-80W
**Proposed Zoning**: Planned Unit Development-Conditional Zoning (PUD-CZ)
**2045 Land Use Map Designation**: Medium Density Residential
**Town Limits**: ETJ and Outside (annexation of portion in Wake County is required with rezoning)

**Adjacent Zoning & Land Uses:**

| | Zoning | Land Use |
|---|---|---|
| **North:** | Planned Unit Development-Conditional Zoning(PUD-CZ #17CZ21& #16CZ26) | Single Family Residential (Sweetwater and Linden subdivisions) |
| **South:** | Rural Residential (RR); Medium Density Residential-Conditional Zoning (MD-CZ #13CZ26 & #13CZ08); Wake Co. R-80W | Olive Chapel Road; Single Family Residential (Riley's Pond and large lot single-family) |
| **East:** | Rural Residential (RR); Planned Unit Development-Conditional Zoning (PUD-CZ #16CZ26) | Single Family Residential (Linden subdivision and large lot single-family) |
| **West:** | Planned Unit Development-Conditional Zoning (PUD-CZ #15CZ32) & Medium Density Residential-Conditional Zoning (MD-CZ #16CZ10) | Single Family Residential (Smith Farm and Haley Farm subdivisions) |

**EXISTING CONDITIONS:**
The site consist of three (3) parcels on the north side of Olive Chapel Road totaling ±79.79 acres. The site has one single family residence, several sheds/barns, and two existing ponds. Along the north boundary there is a 100' stream buffer from Reedy Branch.

**NEIGHBORHOOD MEETING:**
The applicant conducted a neighborhood meeting on October 29, 2020. The neighborhood meeting report is attached.

**WCPSS Coordination:**
A Letter of Impact from Wake County Public School System (WCPSS) was received for this rezoning and is included in the staff report packet. WCPSS indicates that elementary and high schools within the current assignment area for this rezoning/development are anticipated to have insufficient capacity for future students; transportation to schools outside of the current assignment area should be anticipated. School expansion or construction within the next five years may address concerns at the high school level. Possible long-term solutions may include capping students out to schools with available seats (not very proximate), reassignments, or calendar changes.

**2045 LAND USE MAP:**
The 2045 Land Use Map designates the properties as Medium Density Residential. The proposed PUD is consistent with the Land Use Map designation.

## PLANNED UNIT DEVELOPMENT PLAN:

The applicant is proposing a Planned Unit Development Plan with uses and development standards as follows:

### Permitted Uses:

The Rezoned Lands may be used for, and only for, the uses listed immediately below. The permitted uses are subject to the limitations and regulations stated in the UDO and any additional limitations or regulations stated below. For convenience, some relevant sections of the UDO may be referenced; such references do not imply that other sections of the UDO do not apply.

Residential:

- Single Family
- Accessory Dwelling Unit
- Townhouse

Non-Residential:

- Utility, minor
- Greenway
- Park, active
- Park, passive

### Proposed Design Controls:

**Maximum Density:** 4.0 units per acre

**Maximum Building Height:** 50 feet

**Maximum Built-Upon Area:** 70%

**Setbacks**

| | | Proposed PUD-CZ minimum setbacks | MD zoning district minimum setbacks |
|---|---|---|---|
| Single-family | Front | 5' from façade<br>20' from garage to back of sidewalk | 25' |
| | Side | 5' | 6' min/16' total |
| | Rear | 10' | 20' |
| | Corner side | 8' | 15' |
| | | | |
| | | | **HDSF zoning district minimum setbacks** |
| Townhouse, front loaded | Front | 10' from façade<br>20' from garage to back of sidewalk | 15' |
| | Side | 5' | 0' (8' between buildings) |
| | Rear | 10' | 15' |
| | Corner side | 10' | 15' |
| | | | |
| | | | **HDSF zoning district minimum setbacks** |
| Townhouse, alley loaded | Front | 10' from front facade | 15' |
| | Side | 5' | 0' (8' between buildings) |
| | Rear | 5' | 15' |
| | Corner side | 10' | 15' |

**Buffers**

The proposed PUD meets or exceeds the buffers required by the UDO.

| Perimeter Buffers: | UDO Required | Proposed |
|---|---|---|
| Northern property boundary | 15' Type A | 100' stream buffer |
| Eastern property boundary | 20' Type B | 20' Type A |
| Western property boundary | 15' Type A | 20' Type A |
| Olive Chapel Road | 30' Type B | 30' Type E* |

**A 30' Type B buffer shall be provided if homes along Olive Chapel Road are not alley-loaded.

**Architectural Standards**

The proposed development offers the following architectural controls to ensure a consistency of character throughout the development, while allowing for enough variety to create interest and avoid monotony. Changes to the exterior materials, roof, windows, doors, process, trim, etc. are allowable with administrative approval at the staff level. Further details shall be provided at the time of Residential Master Subdivision Plan submittal. The following conditions shall apply:

1. Vinyl siding is not permitted; however, vinyl windows, decorative elements and trim are permitted.

2. The roofline cannot be a single mass; it must be broken up horizontally and vertically between every unit.
3. Garage doors must have windows, decorative details or carriage-style adornments on them.
4. The rear and side elevations of the units that can be seen from the right-of-way shall have trim around the windows.
5. The visible side of a townhome on a corner lot facing the public street shall contain at least 2 decorative elements such as, but not limited to, the following elements:
   - Windows
   - Bay window
   - Recessed window
   - Decorative window
   - Trim around the windows
   - Wrap-around porch or side porch
   - Two or more building materials
   - Column
   - Portico
   - Balcony
   - Dormer
   - Decorative brick/stone
   - Decorative trim
   - Decorative shake
   - Decorative air vents on gable
   - Decorative gable
   - Decorative cornice
6. The garage cannot protrude more than 1-foot from either the front façade or porch.

**Resource Conservation Area**
The Hackney PUD is south and west of NC 540 and is therefore required to provide 30% of the gross site as RCA. If the single-family portion of the PUD is mass graded, that portion of the project will be required to provide an additional 5% RCA. They propose to meet these requirements.

**Tree Replanting**
Existing deciduous trees greater than 18" in diameter (DBH), as identified in the tree survey, that are removed by site development shall be replaced by planting a 1.5" caliper native tree from the *Town of Apex Design and Development Manual* as a street tree or as other required landscaping. Excess required tree replacement will occur in common open space areas.

**Clean Energy**
Residential dwelling units will be provided with solar conduit to accommodate the future installation of solar panels.

**Water Quality**
1. Signs will be installed near SCMs in order to:
   - Reduce pet water near SCM drainage areas
   - Reduce fertilizer near SCM drainage areas
2. Installation of Pet Waste Stations in common areas will occur within the neighborhood

**Planting and Landscaping**
1. Install Warm Season grasses (Bermuda, Zoysia, etc) in lawn areas to reduce the need for irrigation and chemicals.
2. Install required Street Trees, Buffer, and Re-Vegetation plantings that consist of a variety of native plant materials recognized by the New Hope Audubon Society or the NCSU manual for Landscaping for Wildlife with Native Plants as being bird and pollinator friendly; as

allowed by the Town of Apex Deign & Development Manual or approved by Apex staff.

3. Specify pocket park plantings that are recognized by the NC Wildlife Federation as being Native Pollinator Plants as part of the Statewide Butterfly Highway initiative.
4. Include at least 4 hardwood tree varieties in the proposed plantings, as allowed by the Apex Design and Development Manual.

**Environmental Resources**

**Parking**

Parking and loading will comply with all applicable requirements of UDO Sec. 8.3 *Parking and Loading*. Per UDO Section 8.3.4 of the UDO, guest parking shall be designated within common areas and be distributed throughout the project. Striped on-street parking may be counted toward guest parking requirements. For townhouses, guest parking shall be distributed so that there is at least one parking space within 200' of each townhouse lot.

**Public Facilities**

The project's construction will consist of the extension of public facilities to serve the site. All public facilities and infrastructure shall comply with the Town of Apex Sewer and Water Master Plans and the Town of Apex Standards and Specifications. Public facilities include:

Water/Sanitary Sewer:
All lines will be designed according to Town of Apex Standards and Specifications.

Other Utilities:
Electric service shall be provided by the Town of Apex. Gas, telephone, and cable shall be provided by the builder as coordinated with the appropriate utility companies.

**Stormwater Management**

Two ponds exist on the parcels and drain to Reedy Branch Creek, eventually feeding into Jordan Lake. The proposed development plan will require stormwater management measures in accordance with Sections 6.1 and 7.5.7 in the Town of Apex Unified Development Ordinance. Stormwater captured on the site will be conveyed to proposed Stormwater Control Measures, which will be identified on plans during the major subdivision or site plan approval stage. Post-development peak runoff shall not exceed pre-development peak runoff for the 24-hour, 1-year and 10-year storm events in accordance with the Unified Development Ordinance. Treatment for the first 1-inch of runoff will be provided such that the removal of 85% Total Suspended Solids is achieved. All stormwater devices will meet the design requirements of NCDENR and the Town of Apex.

**APEX TRANSPORTATION PLAN/ACCESS and CIRCULATION:**

The Site will require an internal public roadway network and parking spaces. The onsite transportation circulation system shall be consistent with the Town of Apex Transportation Plan and the Town of Apex Standard Specifications and Standard Details. The following conditions shall apply:

1. Hasse Avenue will be constructed between Olive Chapel Road and its current terminus north of the project.

2. Olive Chapel Road will be widened to include construction of a 100-foot eastbound left-turn lane with appropriate deceleration length and taper and a 100-foot westbound right-turn lane with appropriate deceleration length and taper on Olive Chapel Road, subject to NCDOT review and approval.
3. The Olive Chapel Road turn lane widening will be completed prior to platting Hasse Avenue access to Olive Chapel Road and the connection to Hasse Avenue north of the project will be completed prior to the last plat in the subdivision.
4. A 6-foot bike lane and 5-foot paved shoulder will be located on the north side of Olive Chapel Road per the Bicycle and Pedestrian System Plan Map.

**Pedestrian Facilities**

1. The development plan will incorporate sidewalk infrastructure along Olive Chapel Road as well as the internal street network.
2. A trail will serve as a connection from the western portion of the community to the Reedy Branch Greenway.
3. Sidewalks will be provided on both sides of all streets for single-family detached homes.
4. There will be a 10-foot side path provided along minor collector road as shown on the Bicycle and Pedestrian Systems Plan Map.

**Affordable Housing**

If the Town of Apex has a fund or other mechanism in place to receive donations to construct, subsidize, or participate in the development of affordable housing units (the "Fund"), the developer will contribute $215 per lot to this Fund prior to the first residential Certificate of Occupancy. In the event the Fund has not been established by the Town of Apex, the money will be conveyed to a local non-profit working on affordable housing initiatives. The developer will work with the Town of Apex to identify a mutually acceptable local non-profit organization to receive these funds.

**ENVIRONMENTAL ADVISORY BOARD:**

This rezoning was submitted before the Environmental Advisory Board began holding pre-application meetings on rezonings.

**PARKS, RECREATION, AND CULTURAL RESOURCES ADVISORY COMMISSION:**

The Parks, Recreation, and Cultural Resources Advisory Commission reviewed this item at their December 9, 2020 meeting and unanimously recommended a fee-in-lieu of dedication with credit for construction of greenway which connects side path along Hasse Ave to the west connecting to the Reedy Branch Greenway in Smith Farm. The fee rate will be set at the time of Town Council approval and the credit of construction will be calculated prior to construction plan approval. Per UDO Article 14, the greenway must be completed and accepted prior to 25% of the building permits for the project being issued.

**PLANNING BOARD RECOMMENDATION:**

The Planning Board held a Public Hearing on March 8, 2021 and voted to recommend approval, with the conditions as offered by the applicant, by a vote of 6-0.

**PLANNING STAFF RECOMMENDATION:**

Planning staff recommends approval of rezoning #20CZ14 Hackney PUD with the conditions as proposed by the applicant.

**ANALYSIS STATEMENT OF THE REASONABLENESS OF THE PROPOSED REZONING:**
This Statement will address consistency with the Town's comprehensive and other applicable plans, reasonableness, and effect on public interest:

The 2045 Land Use Map designates the site as Medium Density Residential. The proposed PUD is consistent with that land use classification.

Approval of the rezoning is reasonable and in the public interest because the site will act a transition between higher and lower residential densities. The proposed rezoning also provides for increased stream buffers, higher planting standards, and a contribution to affordable housing.

The proposed rezoning is also reasonable and in the public interest because it will allow this property to develop in a way that is consistent with the surrounding areas and will build side path along the minor collector that will be constructed through the site to Olive Chapel Road.

**PLANNED UNIT DEVELOPMENT DISTRICT AND CONDITIONAL ZONING STANDARDS:**
***Standards***
In return for greater flexibility in site design requirements, Planned Development (PD) Districts are expected to deliver exceptional quality community designs that preserve critical environmental resources; provide high quality community amenities; incorporate creative design in the layout of buildings, Resource Conservation Area and circulation; ensure compatibility with surrounding land uses and neighborhood character; provide high quality architecture; and provide greater efficiency in the layout and provision of roads, utilities, and other infrastructure. The Planned Development (PD) Districts shall not be used as a means of circumventing the Town's adopted land development regulations for routine developments.

1) *Planned Unit Development (PUD-CZ) District*
In approving a Planned Development (PD) Zoning District designation for a PUD-CZ, the Town Council shall find the PUD-CZ district designation and PD Plan for PUD-CZ demonstrates compliance with the following standards:

a) *Development parameters*

(i) The uses proposed to be developed in the PD Plan for PUD-CZ are those uses permitted in Sec. 4.2.2 *Use Table.*

(ii) The uses proposed in the PD Plan for PUD-CZ can be entirely residential, entirely non-residential, or a mix of residential and non-residential uses, provided a minimum percentage of non-residential land area is included in certain mixed use areas as specified on the 2030 Land Use Map. The location of uses proposed by the PUD-CZ must be shown in the PD Plan with a maximum density for each type of residential use and a maximum square footage for each type of non-residential use.

(iii) The dimensional standards in Sec. 5.1.3 *Table of Intensity and Dimensional Standards, Planned Development Districts* may be varied in the PD Plan for PUD-CZ. The PUD-CZ shall demonstrate compliance with all other dimensional standards of the UDO, North Carolina Building Code, and North Carolina Fire Code.

(iv) The development proposed in the PD Plan for PUD-CZ encourages cluster and compact development to the greatest extent possible that is interrelated and linked by

pedestrian ways, bikeways and other transportation systems. At a minimum, the PD Plan must show sidewalk improvements as required by the Apex Transportation Plan and the *Town of Apex Standard Specifications and Standard Details*, and greenway improvements as required by the Town of Apex Parks, Recreation, Greenways, and Open Space Plan and the Apex Transportation Plan. In addition, sidewalks shall be provided on both sides of all streets for single-family detached homes.

v) The design of development in the PD Plan for PUD-CZ results in land use patterns that promote and expand opportunities for walkability, connectivity, public transportation, and an efficient compact network of streets. Cul-de-sacs shall be avoided unless the design of the subdivision and the existing or proposed street system in the surrounding area indicate that a through street is not essential in the location of the proposed cul-de-sac, or where sensitive environmental areas such as streams, floodplains, and wetlands would be substantially disturbed by making road connections.

(vi) The development proposed in the PD Plan for PUD-CZ is compatible with the character of surrounding land uses and maintains and enhances the value of surrounding properties.

(vii) The development proposed in the PD Plan for PUD-CZ has architectural and design standards that are exceptional and provide higher quality than routine developments. All residential uses proposed in a PD Plan for PUD-CZ shall provide architectural elevations representative of the residential structures to be built to ensure the Standards of this Section are met.

b) *Off-street parking and loading*. The PD Plan for PUD-CZ shall demonstrate compliance with the standards of Sec. 8.3 *Off-Street Parking and Loading*, except that variations from these standards may be permitted if a comprehensive parking and loading plan for the PUD-CZ is submitted as part of the PD Plan that is determined to be suitable for the PUD-CZ, and generally consistent with the intent and purpose of the off-street parking and loading standards.

c) *RCA.* The PD Plan for PUD-CZ shall demonstrate compliance with Sec. 8.1.2 Resource Conservation Area, except that the percentage of RCA required under Sec. 8.1.2 may be reduced by the Town Council by no more than ten percent (10%) provided that the PD Plan for PUD-CZ includes one or more of the following:

(i) A non-residential component; or

(ii) An overall density of 7 residential units per acre or more; or

(iii) Environmental measures including but not limited to the following:
(a) The installation of a solar photovoltaic (PV) system on a certain number or percentage of single-family or townhouse lots or on a certain number or percentage of multifamily, mixed-use, or nonresidential buildings. All required solar installation shall be completed or under construction prior to 90% of the building permits being issued for the approved number of lots or buildings. For single-family or townhouse

installations, the lots on which these homes are located shall be identified on the Master Subdivision Plat, which may be amended;

(b) The installation of a geothermal system for a certain number or percentage of units within the development; or

(c) Energy efficiency standards that exceed minimum Building Code requirements (i.e. SEER rating for HVAC).

d) *Landscaping*. The PD Plan for PUD-CZ shall demonstrate compliance with the standards of Sec. 8.2 *Landscaping, Buffering and Screening*, except that variations from these standards may be permitted where it is demonstrated that the proposed landscaping sufficiently buffers uses from each other, ensures compatibility with land uses on surrounding properties, creates attractive streetscapes and parking areas and is consistent with the character of the area. In no case shall a buffer be less than one half of the width required by Sec. 8.2 or 10 feet in width, whichever is greater.

e) *Signs.* Signage in the PD Plan for PUD-CZ shall demonstrate compliance with Sec. 8.7 *Signs*, except that the standards can be varied if a master signage plan is submitted for review and approval concurrent with the PD plan and is determined by the Town Council to be suitable for the PUD-CZ and generally consistent with the intent and purpose of the sign standards of the UDO. The master signage plan shall have design standards that are exceptional and provide for higher quality signs than those in routine developments and shall comply with Sec. 8.7.2 *Prohibited Signs*.

f) *Public facilities.* The improvements standards and guarantees applicable to the public facilities that will serve the site shall comply with Article 7: *Subdivision and* Article 14: *Parks, Recreation, Greenways, and Open Space*.

(i) The PD Plan for PUD-CZ demonstrates a safe and adequate on-site transportation circulation system. The on-site transportation circulation system shall be integrated with the off-site transportation circulation system of the Town. The PD Plan for PUD-CZ shall be consistent with the Apex Transportation Plan and the *Town of Apex Standard Specifications and Standard Details* and show required right-of-way widths and road sections. A Traffic Impact Analysis (TIA) shall be required per Sec. 13.19.

(ii) The PD Plan for PUD-CZ demonstrates a safe and adequate on-site system of potable water and wastewater lines that can accommodate the proposed development, and are efficiently integrated into off-site potable water and wastewater public improvement plans. The PD Plan shall include a proposed water and wastewater plan.

(iii) Adequate off-site facilities for potable water supply, sewage disposal, solid waste disposal, electrical supply, fire protection and roads shall be planned and programmed for the development proposed in the PD Plan for PUD-CZ, and the development is conveniently located in relation to schools and police protection services.

(iv) The PD Plan shall demonstrate compliance with the parks and recreation requirements of Sec. Article 14: *Parks, Recreation, Greenways, and Open Space* and Sec. 7.3.1 *Privately-owned Play Lawns* if there is a residential component in the PUD-CZ.

g) *Natural resource and environmental protection.* The PD Plan for PUD-CZ demonstrates compliance with the current regulatory standards of this Ordinance related to natural resource and environmental protection in Sec. 6.1 *Watershed Protection Overlay District*, Sec. 6.2 *Flood Damage Prevention Overlay District*, and Sec. 8.1 *Resource Conservation*.

h) *Storm water management.* The PD Plan shall demonstrate that the post-development rate of on-site storm water discharge from the entire site shall not exceed pre-development levels in accordance with Sec. 6.1.7 of the UDO.

i) *Phasing*. The PD Plan for PUD-CZ shall include a phasing plan for the development. If development of the PUD-CZ is proposed to occur in more than one phase, then guarantees shall be provided that project improvements and amenities that are necessary and desirable for residents of the project, or that are of benefit to the Town, are constructed with the first phase of the project, or, if this is not possible, then as early in the project as is technically feasible.

j) *Consistency with 2045 Land Use Map.* The PD Plan for PUD-CZ demonstrates consistency with the goals and policies established in the Town's 2030 Land Use.

k) *Complies with the UDO.* The PD Plan for PUD-CZ demonstrates compliance with all other relevant portions of the UDO.

***Legislative Considerations***

The Town Council shall find the PUD-CZ designation demonstrates compliance with the following standards. Sec. 2.3.3.F:

The applicant shall propose site-specific standards and conditions that take into account the following considerations, which are considerations that are relevant to the legislative determination of whether or not the proposed conditional zoning district rezoning request is in the public interest. These considerations do not exclude the legislative consideration of any other factor that is relevant to the public interest.

1) *Consistency with 2030 Land Use Map.* The proposed Conditional Zoning (CZ) District use's appropriateness for its proposed location and consistency with the purposes, goals, objectives, and policies of the 2030 Land Use Map.

2) *Compatibility.* The proposed Conditional Zoning (CZ) District use's appropriateness for its proposed location and compatibility with the character of surrounding land uses.

3) *Zoning district supplemental standards.* The proposed Conditional Zoning (CZ) District use's compliance with Sec. 4.4 *Supplemental Standards,* if applicable.

4) *Design minimizes adverse impact.* The design of the proposed Conditional Zoning (CZ) District use's minimization of adverse effects, including visual impact of the proposed use on adjacent lands; and avoidance of significant adverse impacts on surrounding lands regarding trash, traffic, service delivery, parking and loading, odors, noise, glare, and vibration and not create a nuisance.

5) *Design minimizes environmental impact.* The proposed Conditional Zoning District use's minimization of environmental impacts and protection from significant deterioration of water and air resources, wildlife habitat, scenic resources, and other natural resources.

6) *Impact on public facilities.* The proposed Conditional Zoning (CZ) District use's avoidance of having adverse impacts on public facilities and services, including roads, potable water and wastewater facilities, parks, schools, police, fire and EMS facilities.

7) *Health, safety, and welfare.* The proposed Conditional Zoning (CZ) District use's effect on the health, safety, or welfare of the residents of the Town or its ETJ.

8) *Detrimental to adjacent properties.* Whether the proposed Conditional Zoning (CZ) District use is substantially detrimental to adjacent properties.

9) *Not constitute nuisance or hazard.* Whether the proposed Conditional Zoning (CZ) District use constitutes a nuisance or hazard due to traffic impact or noise, or because of the number of persons who will be using the Conditional Zoning (CZ) District use.

10) *Other relevant standards of this Ordinance.* Whether the proposed Conditional Zoning (CZ) District use complies with all standards imposed on it by all other applicable provisions of this Ordinance for use, layout, and general development characteristics.

January 25, 2021

Baohong Wan, Phd, P.E.
VHB Engineering NC
Venture I
940 Main Campus Drive, Suite 500
Raleigh, NC 27606
919-829-0328

Subject: **Staff summary and comments for the Hackney Tract Subdivision TIA, 12/22/2020**

Dr. Wan:

Please review the following summary of my comments and recommendations. You may schedule a meeting with me and your client to discuss at your convenience.

Study Area

The TIA studied access to the proposed subdivision development at the following intersection:

- Access #1/Hasse Avenue Extension and Olive Chapel Road

The following four intersections were also studied in the TIA:

- Olive Chapel Road and Richardson Road
- Olive Chapel Road and Apex Barbecue Road
- Richardson Road and Hasse Avenue/Little Gem Lane
- US Highway 64 East at Richardson Road
- US Highway 64 West at U-turn east of Richardson Road

Trip Generation

The proposed development is expected to consist of up to 100 single-family homes and 133 multi-family homes. It's projected to generate approximately 33 new trips entering and 106 new trips exiting the site during the weekday A.M. peak hour and 112 new trips entering and 66 new trips exiting the site during the weekday P.M. peak hour. The development is projected to add an additional 2,005 daily trips onto the adjacent roadway network.

Background traffic

Background traffic consists of 3% annual background traffic growth compounded to build out year 2024, and the following approved developments:

- Saddlebrook - 25% traffic (75% build out)
- Buckhorn Preserve – 50% traffic (50% build out)
- Stillwater -15% traffic (85% build out)
- Westford – 20% traffic (80% build out)
- Smith Farm Residential– 25% traffic (75% build out)
- Linden – 85% traffic (15% build out)
- Sweetwater residential - 20% traffic (80% build out)
- Sweetwater commercial

Trip Distribution and Assignment

The trip distributions to and from the development site are as follows:

- 50% to/from the east via US Highway 64
- 10% to/from the west via US Highway 64
- 25% to/from the east via Olive Chapel Road
- 5% to/from the west via Olive Chapel Road
- 8% to/from the south via Richardson Road
- 2% to/from the south via Apex Barbecue Road

Traffic Capacity Analysis and Recommendations

Level of Service (LOS) is a grade of A through F assigned to an intersection, approach, or movement to describe how well or how poorly it operates. LOS A through D is considered acceptable for peak hour operation. LOS E or F describes potentially unacceptable operation and developers may be required to mitigate their anticipated traffic impact to improve LOS based on the Apex Unified Development Ordinance (UDO).

Tables 1 through 8 describe the levels of service (LOS) for the scenarios analyzed in the TIA. "*NA"* is shown when the scenario does not apply. The scenarios are as follows:

- **Existing 2020** - Existing year 2020 traffic.
- **No Build 2024** – Projected year (2024) with background growth, approved development traffic from others, and committed transportation improvements by others where applicable.
- **Build 2024 –** Projected year (2024) with background traffic, background improvements, and site build-out including recommended improvements where applicable.

**Access #1/Hasse Avenue Extension and Olive Chapel Road (Unsignalized)**

| Table 1. A.M. / P.M. Unsignalized Peak Hour Levels of Service<br>Access #1/Hasse Avenue Extension and Olive Chapel Road | |
|---|---|
| | **Build 2024** |
| **Overall** | NA |
| ***Eastbound (Olive Chapel Road)*** | *A / A*[2] |
| ***Westbound (Olive Chapel Road)*** | *NA* |
| ***Southbound (Access #1/Hasse Avenue Extension)*** | *C / D*[1] |

1. Level of service for stop-controlled minor street approaches.
2. Level of service for left turn movements on free-flowing approaches.

TIA recommendations:

- The TIA recommends construction of Future Access #1/Hasse Avenue to consist of one inbound lane and one outbound lane. The TIA also recommends construction of a dedicated left-turn lane on eastbound Olive Chapel Road with 100 feet of storage length and appropriate taper, and a dedicated right-turn lane on westbound Olive Chapel Road with 100 feet of storage length and appropriate taper.

Apex staff recommendations:

- Apex staff concur with the recommendations. The stop-controlled southbound approach is projected to operate at LOS D or better with delays of 16 and 25 seconds per vehicle in the AM and PM peak hours. The turn lanes proposed on Olive Chapel Road are projected to provide enough capacity to store queues into the development during both peak hours.

**Olive Chapel Road and Richardson Road**

| Table 2. A.M. / P.M. Peak Hour Levels of Service<br>Olive Chapel Road and Richardson Road | | | |
|---|---|---|---|
| | **Unsignalized** | **Signalized** | |
| | **Existing 2020** | **No Build 2024** | **Build 2024** |
| **Overall** | NA | A / A | A / A |
| ***Eastbound (Olive Chapel Road)*** | *B / B*[2] | *A / B* | *A / B* |
| ***Westbound (Olive Chapel Road)*** | *B / B*[2] | *B / B* | *B / B* |
| ***Northbound (Richardson Road)*** | *B / B*[1] | *B / B* | *B / B* |
| ***Southbound (Richardson Road)*** | *B / C*[1] | *A / B* | *A / B* |

1. Level of service for stop-controlled minor street approaches.
2. Level of service for left turn movements on free-flowing approaches.

TIA recommendations:

- The TIA recommends no improvements at this intersection.

Apex staff recommendations:

- Apex staff concur with the recommendations in the TIA. When signalized, this intersection is projected to operate at LOS A in both peak hours in the Build 2024 scenario. A traffic signal has been approved by NCDOT at this intersection, and is committed by adjacent development for installation prior to the build out of this development.

**Olive Chapel Road and Apex Barbecue Road (Unsignalized)**

| Table 3. A.M. / P.M. Unsignalized Peak Hour Levels of Service<br>Olive Chapel Road and Apex Barbecue Road | | | |
|---|---|---|---|
| | **Existing 2020** | **No Build 2024** | **Build 2024** |
| **Overall** | NA | NA | NA |
| ***Eastbound (Olive Chapel Road)*** | *NA* | *NA* | *NA* |
| ***Westbound (Olive Chapel Road)*** | *A / A*[2] | *A / B*[2] | *A / B*[2] |
| ***Northbound (Apex Barbecue Road)*** | *B / C*[1] | *C / F*[1] | *C / F*[1] |

1. Level of service for stop-controlled minor street approaches.
2. Level of service for left turn movements on free-flowing approaches.

TIA recommendations:

- The TIA recommends no improvements at this intersection.

Apex staff recommendations:

- Apex staff concur with the recommendations in the TIA. The stop-controlled northbound approach is projected to operate at LOS F in the PM peak hour with delays of 135 seconds per vehicle and 95$^{th}$ percentile queues of 250 feet. However the development is not anticipated to add more than 3% to the overall intersection traffic volume, therefore no improvements are recommended per the UDO. This intersection is identified for future realignment in the Town's Transportation Plan, but no funded project is identified at this time and both roadways are state-maintained.

**Richardson Road and Hasse Avenue/Little Gem Lane (Unsignalized)**

| Table 4. A.M. / P.M. Unsignalized Peak Hour Levels of Service<br>Richardson Road and Hasse Avenue/Little Gem Lane | | | |
|---|---|---|---|
| | **Existing 2020** | **No Build 2024** | **Build 2024** |
| **Overall** | NA | NA | NA |
| ***Eastbound (Little Gem Lane)*** | *A / B*[1] | *C / C*[1] | *C / D*[1] |
| ***Westbound (Hasse Avenue)*** | *A / A*[1] | *C / C*[1] | *C / C*[1] |
| ***Northbound (Richardson Road)*** | *A / A*[2] | *A / A*[2] | *A / A*[2] |
| ***Southbound (Richardson Road)*** | *A / A*[2] | *A / A*[2] | *A / B*[2] |

1. Level of service for stop-controlled minor street approaches.
2. Level of service for left turn movements on free-flowing approaches.

TIA recommendations:

- The TIA recommends no improvements at this intersection.

Apex staff recommendations:

- Apex staff concur with the recommendations in the TIA. The minor street approaches are projected to operate at LOS D or better during both peak hours of operation, with 95$^{th}$ percentile queues not exceeding 50 feet on any approach.

**US Highway 64 East at Richardson Road**

**Table 5. A.M. / P.M. Peak Hour Levels of Service**
**US Highway 64 East at Richardson Road**

| | **Unsignalized** | **Signalized** | |
|---|---|---|---|
| | **Existing 2020** | **No Build 2024** | **Build 2024** |
| **Overall** | NA | C / D | C / D |
| ***Eastbound (US Hwy 64)*** | *NA* | *C / D* | *C / E* |
| ***Westbound Left (US Hwy 64)*** | *F / F*[2] | *B / B* | *A / B* |
| ***Northbound Right (Richardson Road)*** | *C / C*[1] | *C / D* | *C / D* |

1. Level of service for stop-controlled minor street approaches.
2. Level of service for left turn movements on free-flowing approaches.

TIA recommendations:

- The TIA recommends no improvements at this intersection.

Apex staff recommendations:

- Apex staff concur with the recommendations in the TIA. When signalized with dual westbound left and dual northbound right turn lanes, this intersection is projected to operate at LOS C and D in the AM and PM peak hours of operation with average intersection delays of 22 seconds and 44.5 seconds per vehicle. The eastbound approach is projected to operate at LOS E in the PM peak hour. However, the development is not anticipated to add more than 4% to the overall intersection traffic volume, therefore no improvements are recommended per the UDO. A traffic signal has been approved by NCDOT at this intersection, and is committed by adjacent development along with the additional turn lanes for installation prior to the build out of this development.

**US Highway 64 West at U-turn east of Richardson Road**

| Table 6. A.M. / P.M. Peak Hour Levels of Service<br>US Highway 64 West at U-turn east of Richardson Road | | | |
|---|---|---|---|
| | **Unsignalized** | **Signalized** | |
| | **Existing 2020** | **No Build 2024** | **Build 2024** |
| **Overall** | NA | B / C | B / C |
| ***Eastbound U-turn (US Hwy 64)*** | *B / C*[2] | *C / E* | *C / E* |
| ***Westbound (US Hwy 64)*** | *NA* | *A / C* | *B / C* |

1. Level of service for stop-controlled minor street approaches.
2. Level of service for left turn or U-turn movements on free-flowing approaches.

TIA recommendations:

- The TIA recommends no improvements at this intersection.

Apex staff recommendations:

- Apex staff concur with the recommendations in the TIA. When signalized with dual eastbound U-turn lanes, this intersection is projected to operate at overall LOS C or better in both peak hours in the Build 2024 scenario. A traffic signal has been approved by NCDOT at this intersection, and is committed by adjacent development along with the additional U-turn lane for installation prior to the build out of this development.

Please coordinate with the NCDOT District Engineer's Office concerning recommended improvements. Town staff will be available for meetings with NCDOT staff to discuss improvements on state maintained roadways as needed. All recommendations are subject to review by Town Council prior to approval.

Sincerely,

Serge Grebenschikov
Traffic Engineer
919-372-7448

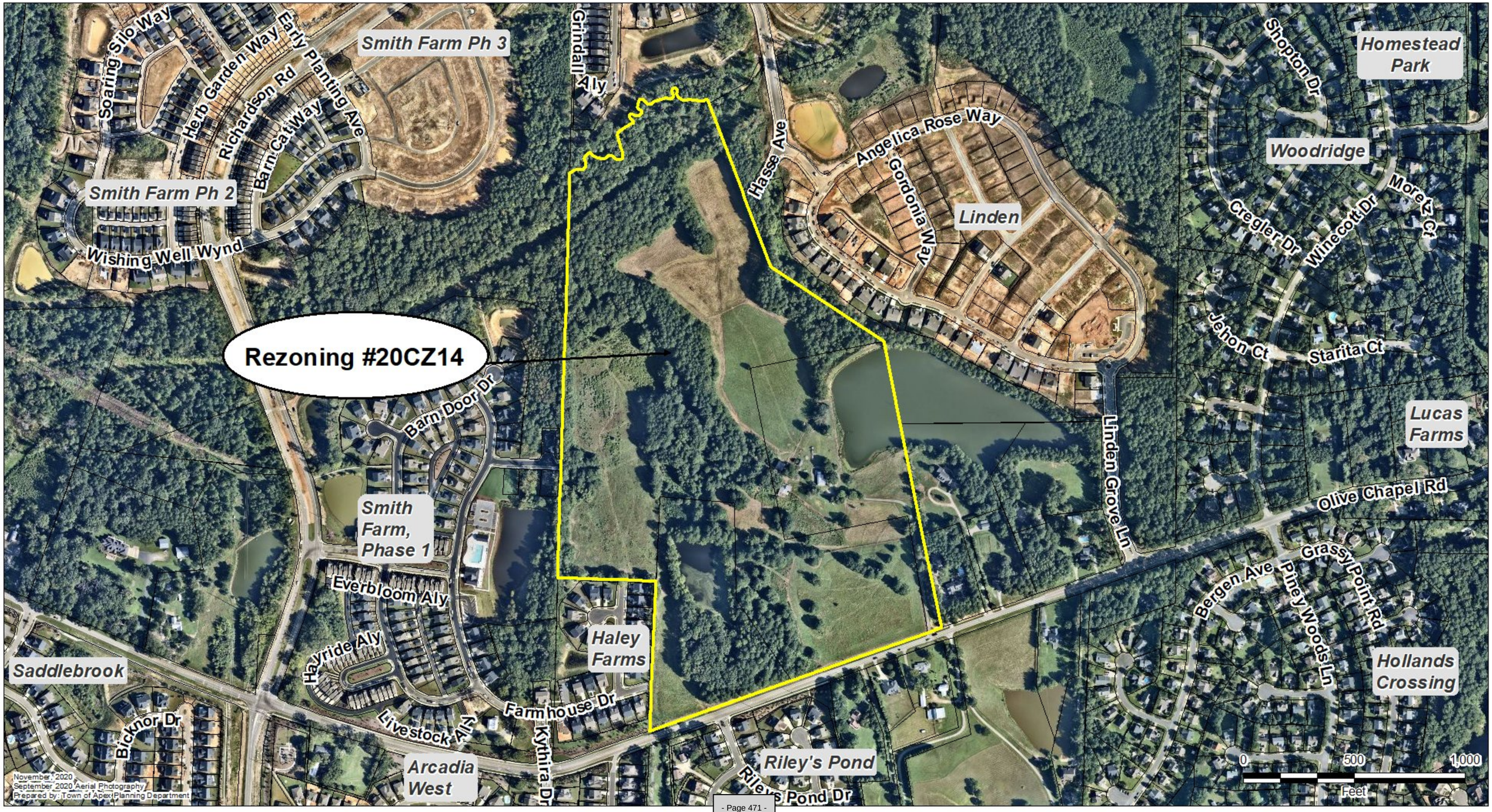
Rezoning #20CZ14
Smith Farm Ph 3
Smith Farm Ph 2
Soaring Silo Way
Herb Garden Way
Richardson Rd
Early Planting Ave
Barn Cat Way
Wishing Well Wynd
Grindall Aly
Hasse Ave
Angelica Rose Way
Gordonia Way
Linden
Homestead Park
Shopton Dr
Woodridge
Cregler Dr
Winecott Dr
Moretz Ct
Jehon Ct
Starita Ct
Lucas Farms
Linden Grove Ln
Olive Chapel Rd
Barn Door Dr
Smith Farm, Phase 1
Everbloom Aly
Hayride Aly
Haley Farms
Saddlebrook
Bicknor Dr
Livestock Aly
Farmhouse Dr
Kythira Dr
Arcadia West
Riley's Pond
Riley's Pond Dr
Bergen Ave
Piney Woods Ln
Grassy Point Rd
Hollands Crossing
November, 2020
September, 2020 Aerial Photography
Prepared by: Town of Apex Planning Department
0
500
1,000
Feet

# PLANNED UNIT DEVELOPMENT-CONDITIONAL ZONING DISTRICT PETITION
# 2045 LAND USE MAP AMENDMENT PROCESS INFORMATION

**PD PLAN/PUD-CZ PETITION SUBMISSION:** Applications are due by 12:00 pm on the first business day of each month. See the PUD Plan Schedule on the website for more details.

**PD PLAN/PUD-CZ PETITION FEES:**
PUD-CZ Request: $1,500.00 + $10 an acre
PD Plan Amendment not requiring full TRC Review: $500.00
2045 Land Use Map Amendment: $700.00

**PRE-APPLICATION MEETING:** A pre-application meeting with members of the Technical Review Committee is required to be scheduled prior to the submittal of a PD Plan for PUD-CZ. Pre-application meetings are typically scheduled on the 1st, 2nd and 5th Thursdays of the month.

To schedule a meeting, applicants must e-mail a pdf map, drawing, model, site or sketch plan to Planner Lauren Staudenmaier (lauren.staudenmaier@apexnc.org) no later than five (5) working days prior to the desired meeting day.

**PURPOSE OF A PUD-CZ (UDO Section 3.3.3(C)):** The purpose of the PUD-CZ is to permit variations in order to allow flexibility for landowners to creatively plan for a site specific, higher quality overall development of their land in a way that is not possible through the strict application of the minimum standards of this Ordinance. This is done through the application of performance standards that: integrate and mix uses where a mix of uses is proposed, possess interconnectivity, reflect the small-town character of Apex, expand opportunities for public transportation, preserve of natural features, integrate resource conservation area into plan for development, and that public facilities are available.

**NEIGHBORHOOD MEETING:** Neighborhood meetings are required per UDO Section 2.2.7 prior to application submission. The applicant is required to notify property owners and any neighborhood association that represents citizens within that area within 300 feet of the subject property via first class mail a minimum of 10 days in advance of the neighborhood meeting. The applicant shall use their own return address on the envelopes as the meeting is a private meeting between the developer and the neighbors. The applicant shall submit the "Certified List of Property Owners" and "Neighborhood Meeting Packet" forms included in this application packet with their initial submittal. The Neighborhood Meeting Packet is located at the very end of this document.

**ANNEXATION REQUIREMENTS**: If a property or portion thereof subject to the PUD is outside the corporate limits and ETJ, an annexation petition is **REQUIRED** to be submitted on the same day as this application.

## Electronic Submittal Requirements (submit in IDT): Click here to access IDT Plans Website

- PUD-CZ Application
- PD Plan Text (pdf & Word versions)
- Colored Rendering of Building Elevations – 11"x17"
- Transportation Impact Analysis

Site Plan Set
- 24" x 36" size
- Scale not less than: 1" = 50' horizontal, 1" = 5' vertical
- Saved as pdf – no scanned plans

## Hard Copy Submittal Requirements: Submit to Planning Department

- PUD-CZ Petition Application
- Petition Fee
- One (1) hardcopy PD Plan Text
- Three (3) bound Site Plan Sets – 24" x 36" size
- Colored Rendering of Building Elevations
- Legal Description (metes and bounds)
- Certified List of Property Owners within 300 feet of subject property
- Development Name Approval Application
- Town of Apex Utilities Offer & Agreement
- Agent Authorization Form
- WCPSS Residential Development Notice
- Neighborhood Meeting Packet
- If applicable: Annexation Petition, map, legal description and $200.00 fee
- Two (2) bound copies of the Transportation Impact Analysis and 1 copy of the TIA & traffic analysis files on disk or FTP site at first submittal (if applicable)
- One (1) set of envelopes addressed to Certified List of Property Owners within 300 feet of subject property and all the HOAs of those properties within 300' of the subject property. Planning staff may require an additional set of envelopes based on the timing of the Planning Board and Town Council meetings.
- Addresses must be from a current list obtained from the Wake County GIS Map Services. A buffer report service is offered for $1 per page. Please contact them at 919-856-6360 or http://www.wakegov.com/tax/Pages/default.aspx
- Affixed with first class stamps & the following return address:
  Town of Apex Planning Department
  P.O. Box 250
  Apex, NC 27502

## PETITION PROCESS INFORMATION

**NEIGHBORHOOD MEETING:** Neighborhood meetings are required per UDO Section 2.2.7 prior to application submission. The applicant is required to notify property owners and any neighborhood association that represents citizens within that area within 300 feet of the subject property via first class mail a minimum of 10 days in advance of the neighborhood meeting. The applicant shall use their own return address on the envelopes as the meeting is a private meeting between the developer and the neighbors. The applicant shall submit the "Certified List of Property Owners" and "Neighborhood Meeting Packet" forms included in this application packet with their initial submittal. The Neighborhood Meeting Packet is located at the very end of this document.

**REVIEW FOR SUFFICIENCY**: Incomplete plans will be returned to the applicant and sufficiently complete applications are forwarded to the planning staff for review.

**REVIEW BY STAFF**: Planning staff reviews the application to determine compliance with the Unified Development Ordinance (UDO). If the application is determined not to be compliant with the UDO, comments will be sent to the applicant. The applicant must address all staff comments before any public hearings are scheduled.

**PUBLIC HEARING NOTIFICATION**: Notification of the public hearing will take place by three different methods. A written notice will be sent to nearby property owners not more than 25 days nor less than 14 days prior to the public hearings, as required by the UDO. The Planning Department will prepare these written notifications for all property owners of the land subject to the application and all property owners within 300 feet of the land subject to the application. A notice will be published on the Town of Apex website (www.apexnc.org) no less than 10 days, but not more than 25 days, prior to the public hearings, and a notice will be posted at the land subject to the application at least 14 days prior to the public hearings.

**1ST PUBLIC HEARING/PLANNING BOARD MEETING:** The Planning Board will consider the application, relevant support materials, the Staff Report and public testimony given at the public hearing. After the public hearing the Planning Board will make a recommendation to the Town Council. The Planning Board may recommend approval, approval with conditions or disapproval. The application is then forwarded to the Town Council. The Planning Board meets at 4:30 p.m. in the Town Hall Council Chambers on the date indicated on the Rezoning Schedule.

**2ND PUBLIC HEARING/TOWN COUNCIL MEETING:** The Town Council will consider the application, relevant support materials, the Staff Report, the Planning Board recommendation and public testimony given at the public hearing. After the public hearing the Town Council will vote to approve, approve with conditions or disapprove the rezoning. The Town Council meets at 6:00 p.m. in the Town Council Chambers on the date indicated on the Rezoning Schedule.

## PLANNED UNIT DEVELOPMENT APPLICATION

This document is a public record under the North Carolina Public Records Act and may be published on the Town's website or disclosed to third parties.

| | | | |
|---|---|---|---|
| Application #: | 20CZ14 | Submittal Date: | 11-2-20 |
| Fee Paid | $ $2,300 | Check # | |

## PETITION TO AMEND THE OFFICIAL ZONING DISTRICT MAP

Project Name: Hackney Tracts

Address(es): 2600 Olive Chapel Road, 2500 Olive Chapel Road, & 0 Olive Chapel Road

PIN(s) 0721492629, 0722406699, & 0722411102

Acreage: 79.79 ac.

Current Zoning: RR & R-80W Proposed Zoning: PUD-CZ

Current 2045 LUM Designation: Med. Density Residential

Requested 2045 LUM Designation: Med. Density Residential

See next page for LUM amendment

If any portion of the project is shown as mixed use (3 or more stripes on the 2045 Land Use Map) provide the following:

| | | |
|---|---|---|
| Area classified as mixed use: | Acreage: | 0 ac. |
| Area proposed as non-residential development: | Acreage: | 0 ac. |
| Percent of mixed use area proposed as non-residential: | Percent: | 0% |

## Applicant Information

Name: WithersRavenel

Address: 137 S. Wilmington Street, Suite 200

City: Raleigh State: NC Zip: 27601

Phone: 919.469.3340 E-mail: bvega@withersravenel.com

## Owner Information

| | | |
|---|---|---|
| PIN: 0721492629<br>Owner: GOODWIN, EDWIN A<br>Address: Judy Hackney. 2505 Olive Chapel Rd., Apex, NC 27502 | PIN: 0722406699<br>Owner: HACKNEY, CHARLES LEON HACKNEY, JUDY G<br>Address: 2505 Olive Chapel Rd., Apex, NC 27502 | PIN: 0722411102<br>Owner: HACKNEY, JUDY G<br>Address: 2505 Olive Chapel Rd., Apex, NC 27502 |

## Agent Information

Name: Brendie Vega, WithersRavenel

Address: 137 S. Wilmington Street, Suite 200

City: Raleigh State: NC Zip: 27601

Phone: 919.469.3340 E-mail: bvega@withersravenel.com

Other contacts: Glenda Toppe

## PLANNED UNIT DEVELOPMENT APPLICATION

Application #: 20CZ14 Submittal Date: 11-2-20

## 2045 LAND USE MAP AMENDMENT (if applicable)

The applicant does hereby respectfully request the Town Council amend the 2045 Land Use Map. In support of this request, the following facts are shown:

The area sought to be amended on the 2045 Land Use Map is located at:

Not applicable. No proposed change in classification.

Current 2045 Land Use Classification: Med. Density Residential

Proposed 2045 Land Use Classification: Med. Density Residential

What conditions justify the passage of the amendment to the 2045 Land Use Map? Discuss the existing use classifications of the subject area in addition to the adjacent land use classifications.

Not applicable. No proposed change in classification.

Legal description for Tract 1 Hackney Property

Beginning at an Existing Iron Pipe located at the Southwest corner of Lot 1, “William E. Gerringer Subdivision”, Recorded at Map Book 1982, Page 24, Wake County Registry. Said Existing Iron Pipe having North Carolina Geodetic Coordinates (NAD 83, 2011) N: 719,823.90’, E: 2,025,316.49’ Said point is also located on the Northern Margin of Olive Chapel Road, Thence, following the Northern Margin of Olive Chapel Road; South 70°32'42" West, 65.39 feet to a point, said point being the **True Point of Beginning.** Thence, following the Northern Margin of Olive Chapel Road, South 70°31'17" West, 649.92 feet to a point, Thence, Leaving Said Road, North 34°12'20" West, 445.67 feet to a point; Thence, North 00°58'41" West, 436.43 feet to a point; Thence, North 85°35'51" West, 339.02 feet to an Existing Iron Pipe; Thence, South 02°31'45" West, 382.15 feet to an Existing Iron Pipe; Thence, North 87°46'36" West, 443.92 feet to an Existing Iron Pipe; Thence, North 01°42'56" East, 1,191.60 feet to an Existing Iron Pipe; Thence, North 01°42'19" East, 635.94 feet to a point located in the centerline of a creek, Said point being located South 01°42’19” West, 8.02 feet from an Existing Iron Pipe found on the North bank of the creek; Thence, along the centerline of the creek the following seventy-eight (78) calls:
North 62°12'20" East, 26.95 feet to a point; Thence, North 85°25'51" East, 12.16 feet to a point; Thence, South 89°25'18" East, 9.95 feet to a point; Thence, North 72°42'15" East, 16.28 feet to a point; Thence, North 35°12'38" East, 17.29 feet to a point; Thence, North 04°12'00" East, 12.96 feet to a point; Thence, North 21°34'14" West, 18.72 feet to a point; Thence, North 09°03'47" West, 8.16 feet to a point, Thence, North 41°28'27" East, 26.53 feet to a point, Thence, South 84°15'14" East, 11.15 feet to a point, Thence, South 44°43'11" East, 19.83 feet to a point, Thence, South 71°15'05" East, 13.95 feet to a point, Thence, South 74°11'34" East, 15.85 feet to a point, Thence, South 74°44'51" East, 12.72 feet to a point, Thence, South 83°49'13" East, 3.99 feet to a point, Thence, North 64°08'10" East, 16.34 feet to a point, Thence, North 47°07'30" East, 15.60 feet to a point, Thence, South 78°20'55" East, 15.26 feet to a point, Thence, South 56°02'16" East, 5.33 feet to a point, Thence, South 19°19'09" East, 6.90 feet to a point, Thence, South 56°44'29" East, 12.49 feet to a point, Thence, South 83°31'01" East, 16.05 feet to a point, Thence, North 59°49'27" East, 15.58 feet to a point, Thence, North 16°43'28" East, 6.92 feet to a point, Thence, North 01°57'42" West, 8.52 feet to a point, Thence, North 19°34'33" West, 8.53 feet to a point, Thence, North 22°27'53" West, 25.52 feet to a point, Thence, North 08°13'00" West, 17.60 feet to a point, Thence, North 13°08'01" West, 25.39 feet to a point, Thence, North 19°34'33" West, 12.83 feet to a point, Thence, North 00°51'00" East, 8.68 feet to a point, Thence, North 37°09'53" East, 11.70 feet to a point, Thence, North 49°22'35" East, 26.46 feet to a point, Thence, North 62°21'20" East, 30.37 feet to a point, Thence, North 67°46'29" East, 19.95 feet to a point, Thence, North 02°19'02" West, 8.02 feet to a point, Thence, North 48°37'20" West, 9.79 feet to a point, Thence, North 51°28'51" West, 14.82 feet to a point, Thence, North 10°18'42" West, 10.15 feet to a point, Thence, North 29°53'30" East, 7.06 feet to a point, Thence, North 67°41'49" East, 9.59 feet to a point, Thence, South 56°14'07" East, 5.77 feet to a point, Thence, South 63°24'14" East, 9.29 feet to a point, Thence, South 76°41'34" East, 9.25 feet to a point, Thence, North 77°10'45" East, 14.30 feet to a point, Thence, North 49°00'07" East, 13.34 feet to a point, Thence, North 10°50'19" West, 12.26 feet to a point, Thence, North 64°58'17" West, 15.90 feet to a point, Thence, North 31°59'29" West, 7.02 feet to a point, Thence, North 01°03'18" West, 7.87 feet to a point, Thence, North 17°34'16" East, 24.60 feet to a point, Thence, North 26°59'18" East, 8.17 feet to a point, Thence, South 81°51'44" East, 16.60 feet to a point, Thence, South 33°48'00" East, 15.96 feet to a point, Thence, South 49°25'00" East, 16.68 feet to a point, Thence, North 78°59'30" East, 12.42 feet to a point, Thence, North 50°28'53" East, 20.42 feet to a point, Thence, North 70°44'43" East, 46.11 feet to a point, Thence, South 89°01'57" East, 16.84 feet to a point, Thence, South 73°56'31" East, 11.76 feet to a point, Thence, North 66°33'30" East, 13.41 feet to a point, Thence, North 10°20'58" East, 8.36 feet to a point, Thence, North 17°44'49" West, 19.09 feet to a point, Thence, North 07°53'24" East, 12.39 feet to a point, Thence, North 59°58'19" East, 13.53 feet to a point, Thence, South 42°16'28" East, 13.69 feet to

a point, Thence, South 04°17'52" West, 12.70 feet to a point, Thence, South 10°35'03" West, 9.31 feet to a point, Thence, South 32°25'41" East, 5.70 feet to a point, Thence, South 46°46'35" East, 17.73 feet to a point, Thence, South 60°06'25" East, 16.74 feet to a point, Thence, North 86°29'56" East, 19.64 feet to a point, Thence, North 81°25'49" East, 16.54 feet to a point, Thence, South 80°06'27" East, 29.38 feet to a point, Thence, South 84°39'29" East, 22.26 feet to a point, Thence, North 58°33'23" East, 13.24 feet to a point, Thence, North 74°43'49" East, 8.91 feet to a point, Thence, leaving the centerline of said creek, South 20°58'05" East, 22.05 feet to a point, Thence, South 20°45'12" East, 790.03 feet to an Existing Iron Pipe, Thence, South 56°33'25" East, 611.03 feet to an Existing Iron Pipe, Thence, South 78°41'14" West, 615.50 feet to a point, Thence, South 11°18'46" East, 791.04 feet to a point, Thence, North 78°41'14" East, 566.96 feet to a point, Thence, South 09°38'52" East, 536.92 feet to a point, being the **True Point of Beginning**, and having an area of 51.280 Acres, more or less.

**Together with the following area located within the public right of way of Olive Chapel Road**

Beginning at an Existing Iron Pipe located at the Southwest corner of Lot 1, “William E. Gerringer Subdivision”, Recorded at Map Book 1982, Page 24, Wake County Registry. Said Existing Iron Pipe having North Carolina Geodetic Coordinates (NAD 83, 2011) N: 719,823.90’, E: 2,025,316.49’ Said point is also located on the Northern Margin of Olive Chapel Road, Thence, following the Northern Margin of Olive Chapel Road; South 70°32'42" West, 65.39 feet to a point, said point being the **True Point of Beginning.** Thence, South 70°29'55" West, 636.77 feet to a point; Thence, North 34°12'20" West, 31.27 feet to a point; Thence, North 70°31'17" East, 649.92 feet to a point; Thence, South 09°38'52" East, 30.43 feet to a point; being the **True Point of Beginning**, and having an area of 0.445 Acres (19,375 sf), more or less.

Legal description for Tract 2 Hackney Property

Beginning at an Existing Iron Pipe located at the Southwest corner of Lot 1, “William E. Gerringer Subdivision”, Recorded at Map Book 1982, Page 24, Wake County Registry. Said Existing Iron Pipe having North Carolina Geodetic Coordinates (NAD 83, 2011) N: 719,823.90’, E: 2,025,316.49’ Said point is also located on the Northern Margin of Olive Chapel Road, Thence, following the Northern Margin of Olive Chapel Road; South 70°32'42" West, 65.39 feet to a point; Thence, South 70°31’17” West, 649.92 feet to a point, said point being the **True Point of Beginning.**
Thence, following the Northern Margin of Olive Chapel Road, South 70°19'56" West, 682.58 feet to a New Iron Pipe, Thence, Leaving Said Right of Way, Thence, North 02°31'13" East, 5.41 feet to an Existing Iron Pipe; Thence, North 02°31'13" East, 674.17 feet to an Existing Iron Pipe; Thence, North 02°31'45" East, 382.15 feet to an Existing Iron Pipe; Thence, South 85°35'51" East, 339.02 feet to a point, Thence, South 00°58'41" East, 436.43 feet to a point; Thence, South 34°12'20" East, 445.67 feet to a point, being the **True Point of Beginning**, and having an area of 9.526 Acres, more or less.

**Together with the following area located within the public right of way of Olive Chapel Road**

Beginning at an Existing Iron Pipe located at the Southwest corner of Lot 1, “William E. Gerringer Subdivision”, Recorded at Map Book 1982, Page 24, Wake County Registry. Said Existing Iron Pipe having North Carolina Geodetic Coordinates (NAD 83, 2011) N: 719,823.90’, E: 2,025,316.49’ Said point is also located on the Northern Margin of Olive Chapel Road, Thence, following the Northern Margin of Olive Chapel Road; South 70°32'42" West, 65.39 feet to a point; Thence, South 70°31’17” West, 649.92 feet to a point, said point being the **True Point of Beginning.**
Thence, South 34°12'20" East, 31.27 feet to a point; Thence, South 70°19'56" West, 702.77 feet to a point; Thence, North 02°31'13" East, 32.69 feet to a New Iron Pipe; Thence, North 70°19'56" East, 682.58 feet to a point; being the **True Point of Beginning**, and having an area of 0.481 Acres (20,967 sf), more or less.

Legal description for Tract 3 Hackney Property

**Beginning** at an Existing Iron Pipe located at the Southwest corner of Lot 1, “William E. Gerringer Subdivision”, Recorded at Map Book 1982, Page 24, Wake County Registry. Said Existing Iron Pipe having North Carolina Geodetic Coordinates (NAD 83, 2011) N: 719,823.90’, E: 2,025,316.49’ Said point is also located on the Northern Margin of Olive Chapel Road, Thence, following the Northern Margin of Olive Chapel Road; South 70°32'42" West, 65.39 feet to a point; Thence, Leaving said Right of Way, North 09°38'52" West, 536.92 feet to a point; Thence, South 78°41'14" West, 566.96 feet to a point; Thence, North 11°18'46" West, 791.04 feet to a point; Thence, North 78°41'14" East, 615.50 feet to an Existing Iron Pipe; Thence, South 11°18'46" East, 500.58 feet to an Existing Iron Pipe; Thence, South 11°21'53" East, 392.29 feet to an Existing Iron Pipe; Thence, South 11°20'41" East, 425.59 feet to an Existing Iron Pipe, being the Point of **Beginning**, and having an area of 11.871 Acres, more or less.

**Together with the following area located within the public right of way of Olive Chapel Road**

**Beginning** at an Existing Iron Pipe located at the Southwest corner of Lot 1, “William E. Gerringer Subdivision”, Recorded at Map Book 1982, Page 24, Wake County Registry. Said Existing Iron Pipe having North Carolina Geodetic Coordinates (NAD 83, 2011) N: 719,823.90’, E: 2,025,316.49’ Said point is also located on the Northern Margin of Olive Chapel Road; Thence, South 11°20'41" East, 30.29 feet to a point; Thence, South 70°32'42" West, 66.30 feet to a point; Thence, North 09°38'52" West, 30.43 feet to a point; Thence, North 70°32'42" East, 65.39 feet to an Existing Iron Pipe, being the Point of Beginning, and having an area of 0.045 acres (1,975 sf), more or less.

## AGENT AUTHORIZATION FORM

Application #: 20CZ14 Submittal Date: 11-2-20

Hackney, Judy G is the owner* of the property for which the attached application is being submitted:

- ☐ Land Use Amendment
- ☑ Rezoning: For Conditional Zoning and Planned Development rezoning applications, this authorization includes express consent to zoning conditions that are agreed to by the Agent which will apply if the application is approved.
- ☐ Site Plan
- ☑ Subdivision
- ☐ Variance
- ☐ Other:

The property address is: 0 Olive Chapel Road (PIN 0722411102)

The agent for this project is: WithersRavenel

☐ I am the owner of the property and will be acting as my own agent

Agent Name: Brendie Vega

Address: 137 S. Wilmington Street, Suite 200

Telephone Number: 919.535.5212

E-Mail Address: bvega@withersravenel.com

Signature(s) of Owner(s)*

Judy G. Hackney

Judy G. Hackney — Type or print name

Oct 27, 2020 — Date

Type or print name

Date

Attach additional sheets if there are additional owners.

*Owner of record as shown on the latest equalized assessment rolls of Wake County. An option to purchase does not constitute ownership. If ownership has been recently transferred, a copy of the deed must accompany this authorization.

Pursuant to Article 40 of Chapter 66 of the North Carolina General Statutes (the Uniform Electronic Transactions Act) this application and all documents related hereto containing an electronic or digitized signature are legally binding in the same manner as are hard copy documents executed by hand signature. The parties hereby consent to use electronic or digitized signatures in accordance with the Town's Electronic Signature Policy and intend to be bound by the application and any related documents. If electronic signatures are used the application shall be delivered in an electronic record capable of retention by the recipient at the time of receipt.

## AGENT AUTHORIZATION FORM

Application #: 20CZ14 Submittal Date: 11-2-20

Hackney, Charles Leon Hackney, Judy G is the owner* of the property for which the attached application is being submitted:

- ☐ Land Use Amendment
- ☑ Rezoning: For Conditional Zoning and Planned Development rezoning applications, this authorization includes express consent to zoning conditions that are agreed to by the Agent which will apply if the application is approved.
- ☐ Site Plan
- ☑ Subdivision
- ☐ Variance
- ☐ Other:

The property address is: 2500 Olive Chapel Road (PIN 0722406699)

The agent for this project is: WithersRavenel

☐ I am the owner of the property and will be acting as my own agent

Agent Name: Brendie Vega

Address: 137 S. Wilmington Street, Suite 200

Telephone Number: 919.535.5212

E-Mail Address: bvega@withersravenel.com

Signature(s) of Owner(s)*

v Charles Leon Hackney, Sr

Charles Leon Hackney — Oct 27, 2020
Type or print name — Date

v Judy G. Hackney

Judy G. Hackney — Oct 27, 2020
Type or print name — Date

Attach additional sheets if there are additional owners.

*Owner of record as shown on the latest equalized assessment rolls of Wake County. An option to purchase does not constitute ownership. If ownership has been recently transferred, a copy of the deed must accompany this authorization.

Pursuant to Article 40 of Chapter 66 of the North Carolina General Statutes (the Uniform Electronic Transactions Act) this application and all documents related hereto containing an electronic or digitized signature are legally binding in the same manner as are hard copy documents executed by hand signature. The parties hereby consent to use electronic or digitized signatures in accordance with the Town's Electronic Signature Policy and intend to be bound by the application and any related documents. If electronic signatures are used the application shall be delivered in an electronic record capable of retention by the recipient at the time of receipt.

## AGENT AUTHORIZATION FORM

Application #: 20CZ14 Submittal Date: 11-2-20

Goodwin, Edwin A is the owner* of the property for which the attached application is being submitted:

- ☐ Land Use Amendment
- ☑ Rezoning: For Conditional Zoning and Planned Development rezoning applications, this authorization includes express consent to zoning conditions that are agreed to by the Agent which will apply if the application is approved.
- ☐ Site Plan
- ☑ Subdivision
- ☐ Variance
- ☐ Other:

The property address is: 2600 Olive Chapel Road (PIN 0721492629)

The agent for this project is: WithersRavenel

☐ I am the owner of the property and will be acting as my own agent

Agent Name: Brendie Vega

Address: 137 S. Wilmington Street, Suite 200

Telephone Number: 919.535.5212

E-Mail Address: bvega@withersravenel.com

Signature(s) of Owner(s)*

✓ Judy G. Hackney, Trustee

Judy G. Hackney, Trustee of the Edwin A. Goodwin Testamentary Trust — Type or print name — Date

Charles Leon Hackney, Sr.

✓ Charles Leon Hackney, Sr. — Oct 27, 2020

Type or print name — Date

Attach additional sheets if there are additional owners.

*Owner of record as shown on the latest equalized assessment rolls of Wake County. An option to purchase does not constitute ownership. If ownership has been recently transferred, a copy of the deed must accompany this authorization.

Pursuant to Article 40 of Chapter 66 of the North Carolina General Statutes (the Uniform Electronic Transactions Act) this application and all documents related hereto containing an electronic or digitized signature are legally binding in the same manner as are hard copy documents executed by hand signature. The parties hereby consent to use electronic or digitized signatures in accordance with the Town's Electronic Signature Policy and intend to be bound by the application and any related documents. If electronic signatures are used the application shall be delivered in an electronic record capable of retention by the recipient at the time of receipt.

## AFFIDAVIT OF OWNERSHIP

Application #: 20CZ14 Submittal Date: 11-2-20

The undersigned, Judy G. Hackney (the "Affiant") first being duly sworn, hereby swears or affirms as follows:

1. Affiant is over eighteen (18) years of age and authorized to make this Affidavit. The Affiant is the sole owner, or is the authorized agent of all owners, of the property located at _____ and legally described in **Exhibit "A"** attached hereto and incorporated herein (the "Property").

2. This Affidavit of Ownership is made for the purpose of filing an application for development approval with the Town of Apex.

3. If Affiant is the owner of the Property, Affiant acquired ownership by deed, dated _____, and recorded in the Wake County Register of Deeds Office on _____, in Book _____ Page _____.

4. If Affiant is the authorized agent of the owner(s) of the Property, Affiant possesses documentation indicating the agency relationship granting the Affiant the authority to apply for development approval on behalf of the owner(s).

5. If Affiant is the owner of the Property, from the time Affiant was deeded the Property on _____, Affiant has claimed sole ownership of the Property. Affiant or Affiant's predecessors in interest have been in sole and undisturbed possession and use of the property during the period of ownership. Since taking possession of the Property on _____, no one has questioned Affiant's ownership or right to possession nor demanded any rents or profits. To Affiant's knowledge, no claim or action has been brought against Affiant (if Affiant is the owner), or against owner(s) (if Affiant is acting as an authorized agent for owner(s)), which questions title or right to possession of the property, nor is any claim or action pending against Affiant or owner(s) in court regarding possession of the Property.

This the 27 day of October, 2020.

Judy G. Hackney (seal)

Judy G. Hackney individually and as Trustee

Type or print name

Charles Leon Hackney, Sr.

STATE OF NORTH CAROLINA
COUNTY OF Wake

I, the undersigned, a Notary Public in and for the County of Wake, hereby certify that Judy G. Hackney and Charles Leon Hackney Sr., Affiant, personally known to me or known to me by said Affiant's presentation of said Affiant's N/A, personally appeared before me this day and acknowledged the due and voluntary execution of the foregoing Affidavit.

PAUL STANLEY NOTARY PUBLIC WAKE COUNTY, NC My Commission Expires 05-08-2024

[NOTARY SEAL]

Notary Public
State of North Carolina
My Commission Expires: May 8, 2024

## TOWN OF APEX UTILITIES OFFER AND AGREEMENT

Application #: 20CZ14 Submittal Date: 11-2-20

**Town of Apex**
**73 Hunter Street**
**P.O. Box 250 Apex, NC 27502**
**919-249-3400**

WAKE COUNTY, NORTH CAROLINA CUSTOMER SELECTION AGREEMENT

Wake County PINs: 0721492629, 0722411102, 0722406699

0, 2500, 2600 Olive Chapel Road

(the "Premises")

The Town of Apex offers to provide you with electric utilities on the terms described in this Offer & Agreement. If you accept the Town's offer, please fill in the blanks on this form and sign and we will have an Agreement once signed by the Town.

Hackney, Judy et al, the undersigned customer ("Customer") hereby irrevocably chooses and selects the Town of Apex (the "Town") as the permanent electric supplier for the Premises. Permanent service to the Premises will be preceded by temporary service if needed.

The sale, delivery, and use of electric power by Customer at the Premises shall be subject to, and in accordance with, all the terms and conditions of the Town's service regulations, policies, procedures and the Code of Ordinances of the Town.

Customer understands that the Town, based upon this Agreement, will take action and expend funds to provide the requested service. By signing this Agreement the undersigned signifies that he or she has the authority to select the electric service provider, for both permanent and temporary power, for the Premises identified above.

Any additional terms and conditions to this Agreement are attached as Appendix 1. If no appendix is attached this Agreement constitutes the entire agreement of the parties.

Acceptance of this Agreement by the Town constitutes a binding contract to purchase and sell electric power.

Please note that under North Carolina General Statute §160A-332, you may be entitled to choose another electric supplier for the Premises.

Upon acceptance of this Agreement, the Town of Apex Electric Utilities Division will be pleased to provide electric service to the Premises and looks forward to working with you and the owner(s).

ACCEPTED:

CUSTOMER: Hackney, Judy, et. al

BY: Brendie Vega Brendie Vega
Authorized Agent

DATE: 11/2/2020

TOWN OF APEX

BY: _____
Authorized Agent

DATE: _____

## DEVELOPMENT NAME APPROVAL APPLICATION

Application #: 20CZ14 Submittal Date: 11-2-20

Fee for Initial Submittal: No Charge Fee for Name Change after Approval: $500*

### Purpose

To provide a consistent and clearly stated procedure for the naming of subdivisions and/or developments and entrance roadways (in conjunction with *Town of Apex Address Policy*) so as to allow developers to define and associate the theme or aesthetics of their project(s) while maintaining the Town's commitment to preserving the quality of life and safety for all residents of Apex proper and extraterritorial jurisdiction.

### Guidelines

- ✓ The subdivision/development name shall not duplicate, resemble, or present confusion with an existing subdivision/development within Apex corporate limits or extraterritorial jurisdiction except for the extension of an existing subdivision/development of similar or same name that shares a continuous roadway.
- ✓ The subdivision/development name shall not resemble an existing street name within Apex corporate limits or extraterritorial jurisdiction unless the roadway is a part of the subdivision/development or provides access to the main entrance.
- ✓ The entrance roadway of a proposed subdivision/development shall contain the name of the subdivision/development where this name does not conflict with the Town of Apex *Road Name Approval Application* and *Town of Apex Address Policy* guidelines.
- ✓ The name "Apex" shall be excluded from any new subdivision/development name.
- ✓ Descriptive words that are commonly used by existing developments will be scrutinized more seriously in order to limit confusion and encourage distinctiveness. A list of commonly used descriptive words in Apex's jurisdiction is found below.
- ✓ The proposed subdivision/development name must be requested, reviewed and approved during preliminary review by the Town.
- ✓ A $500.00 fee will be assessed to the developer if a subdivision/development name change is requested after official submittal of the project to the Town.*

*The imposed fee offsets the cost of administrative changes required to alleviate any confusion for the applicant, Planning staff, other Town departments, decision-making bodies, concerned utility companies and other interested parties. There is no charge for the initial name submittal.

### Existing Development Titles, Recurring

| | Residential | Non-Residential |
|---|---|---|
| 10 or more | Creek, Farm(s), Village(s), | Center/Centre |
| 6 to 9 | Crossing(s), Park, Ridge, Wood(s) | Commons, Park |
| 3 to 5 | Acres, Estates, Glen(s), Green•, Hills | Crossing(s), Plaza, Station, Village(s) |

•excludes names with Green Level

## CERTIFIED LIST OF NEIGHBORING PROPERTY OWNERS

Application #: _____ Submittal Date: 11-2-20

Provide a certified list of property owners subject to this application and all property owners within 300' of the subject property and HOA Contacts.

| | Owner's Name | PIN |
|---|---|---|
| 1. | See Attachment. | |
| 2. | | |
| 3. | | |
| 4. | | |
| 5. | | |
| 6. | | |
| 7. | | |
| 8. | | |
| 9. | | |
| 10. | | |
| 11. | | |
| 12. | | |
| 13. | | |
| 14. | | |
| 15. | | |

I, Brendie Vega, certify that this is an accurate listing of all property owners and property owners within 300' of the subject property.

Date: 11/2/2020 By: Brendie Vega

COUNTY OF WAKE STATE OF NORTH CAROLINA

Sworn and subscribed before me, Jeri Chastain Pederson, a Notary Public for the above State and County, on this the 2 day of November, 2020.

Jeri Chastain Pederson
Notary Public

Jeri Chastain Pederson
Print Name

SEAL

JERI CHASTAIN PEDERSON
Notary Public
Wake County, North Carolina
My Commission Expires
March 10, 2024

My Commission Expires: 03/10/2024

| Certified List of Neighboring Property Owners | | |
|---|---|---|
| # | OWNER | PIN |
| 1 | GARWOOD, MARGARET GARWOOD, JOHN J | 721396377 |
| 2 | CENIS, NATHAN T CENIS, EMILY ANNE | 721396585 |
| 3 | HURLEY, SONIA R HURLEY, ROBERT | 721397152 |
| 4 | HORNEY, DIANNA HORNEY, JOEY MICHAEL | 721397339 |
| 5 | SMITH FARM OF APEX HOMEOWNERS ASSOCIATION, INC. | 721397362 |
| 6 | RILEY, JAMES EDWARD JR DODSON, JILLIAN SMITH | 721397491 |
| 7 | KOSHY, SIBY VARKEY KOSHY, THARU SARA | 721397536 |
| 8 | ZHOU, QUAN LIU, SHUZHANG | 721397599 |
| 9 | LABRU, VINEET UCHIL, SHRUTI KARUNAKAR | 721398442 |
| 10 | KONAKATI, VIKRAM BHIMAVARAPU, PRATHYUSHA | 721399015 |
| 11 | SAMPATH, PRABHU PRABHU, DEEPA | 721399121 |
| 12 | MATTHEWS, JOHN HENRY III | 721399127 |
| 13 | ARCADIA RIDGE HOMEOWNERS ASSOCIATION, INC. | 721399233 |
| 14 | LACOSTE, FABRICE SANROMAN, STEPHANIE | 721399404 |
| 15 | DE SOUSA, ALDO SILVIO CARNEIRO | 721399466 |
| 16 | LEDESMA, FELIPE ATENCIO, IBELISE MARIA | 721399630 |
| 17 | MARKS, REBECCA R MARKS, JONATHAN A | 721399646 |
| 18 | RUBIN, BEVERLY L | 721482119 |
| 19 | AUSTVOLD, SHAWN AUSTVOLD, JENNIFER | 721491084 |
| 20 | RILEY'S POND HOMEOWNERS ASSOCIATION INC | 721491103 |
| 21 | CAVERO, CLAUDIA MARIANA BENAVIDES | 721491270 |
| 22 | RILEY'S POND HOMEOWNERS ASSOCIATION INC | 721491342 |
| 23 | LEWIS, ANGEL SPENCE LEWIS, COURTNEY DEVON | 721492100 |
| 24 | RILEY'S POND HOMEOWNERS ASSOCIATION INC | 721492366 |
| 25 | WEBB, XAVIER JOHAN | 721492372 |
| 26 | JOYCE, JOHN D JOYCE, ROSEMARY | 721493109 |
| 27 | ALJADER, MAYSAM ALJADER, LORI | 721493206 |
| 28 | LEARY, BRAD LEARY, BRENDA | 721494283 |
| 29 | BAKER, SCOTT J BAKER, MARLO L H | 721495137 |
| 30 | SMITH FARM OF APEX HOMEOWNERS ASSOCIATION, INC. | 721396648 |
| 31 | RAJAN, SUNIL KUMAR OLIPARAMBIL PREMRAJ, RITHU | 721396847 |
| 32 | GANJI, BHAGYA LATHA RAMPA, IMMANUEL | 721396870 |
| 33 | GARABEDIAN, MATTHEW KANG, EY JUNG | 721396975 |
| 34 | BALAPURE, LAXMIKANT MALVI, VISHAKHA | 721397746 |
| 35 | ESBJORN, ROBERT ESBJORN, AUDREY | 721397948 |
| 36 | CHEN, DANDAN WANG, YANG | 721398717 |
| 37 | MCCALL, NATHAN RF GIULIANI, TRACY J | 721398917 |
| 38 | SIDDIQUI, ALI SIDDIQUI, TARANNUM | 721399742 |
| 39 | PANDEY, ROSHAN RAJ | 721399757 |
| 40 | WILSON, BENJAMIN THOMAS THOMAS, JULIE ELIZABETH | 721399853 |
| 41 | PANDEY, NAMIT JOSHI, TARA | 721399859 |
| 42 | BRUMFIELD, RYAN MATTHEW BRUMFIELD, AMANDA PLOCH | 721399954 |
| 43 | MOCK, CHRISTOPHER RICHARD MOCK, ELENA BARRIO | 721399969 |
| 44 | BOLJESIC, JONATHON ELLIS BOLJESIC, VINCA PURI | 721494337 |
| 45 | MARTIN, JOANNE H | 721494350 |

| Certified List of Neighboring Property Owners | | |
|---|---|---|
| # | OWNER | PIN |
| 46 | RILEY'S POND HOMEOWNERS ASSOCIATION INC | 721494411 |
| 47 | DONALDSON, MARK R DONALDSON, HEATHER M | 721495361 |
| 48 | GOTUR, RAGHAVENDER THAMMISETTY, RADHIKA | 721495379 |
| 49 | KENT, THOMAS L. KENT, LEIGH R. | 721496224 |
| 50 | CHOI, KENNY JUNG, JIN | 721496464 |
| 51 | SINGH, SUNIL SINGH, PANCHALI | 721497298 |
| 52 | LEDESMA, ROBERTO LEDESMA, CARMEN | 721497385 |
| 53 | RILEY'S POND HOMEOWNERS ASSOCIATION INC | 721497414 |
| 54 | KUMAR VARMA, CHITRA DILEEP ADUKKATH, BISHAK | 721497452 |
| 55 | KNAPP, GEARY W KNAPP, SUSAN | 721499346 |
| 56 | LENNAR CAROLINAS, LLC | 722219077 |
| 57 | LENNAR CAROLINAS, LLC | 722229350 |
| 58 | LENNAR CAROLINAS, LLC | 722303175 |
| 59 | SMITH FARM OF APEX HOMEOWNERS ASSC INC | 722303478 |
| 60 | BAITER, STEVE MICHAEL BAITER, REAGAN | 722303663 |
| 61 | JOSEPH, BIKKU B VALIYAVEETIL, SAJIN J | 722303770 |
| 62 | BROCK, SIMON PAUL BROCK, ELISA SAYURI JISAK | 722303779 |
| 63 | NICOLAU, DANIEL NICOLAU, MARIA SIMONA | 722303837 |
| 64 | SANDBERG, GEOFFREY ERIK SANDBERG, RACHEL ANN | 722304905 |
| 65 | PITMAN, WESLEY SZYDLOWSKI, JESSICA | 722305447 |
| 66 | DYK, SHAUN M BIGELOW DYK, MELINDA M | 722305656 |
| 67 | SMITH FARM OF APEX HOMEOWNERS ASSOCIATION, INC. | 722309093 |
| 68 | PIKULIK, KENNETH CHARLES GUARD-PIKULIK, MEGAN THAYER | 722313076 |
| 69 | KLEIN, CAROLINE KLEIN, STEVEN | 722327144 |
| 70 | FEDERICO, MICHELLE EDERY, ARIEL | 722327201 |
| 71 | SWEETWATER PROPERTY OWNERS ASSOCIATION, INC | 722327341 |
| 72 | RUTIGLIANO, JOHN P RUTIGLIANO, KAREN E | 722327354 |
| 73 | PAYNE, DEAN ALAN PAYNE, LISA O'HARA | 722327358 |
| 74 | CLEARY, MICHAEL CLEARY, MAUREEN | 722327452 |
| 75 | FERGUSON, MICHAEL R FERGUSON, JESSICA J | 722327455 |
| 76 | FAIRHURST, JOSHUA FAIRHURST, AMANDA L | 722327459 |
| 77 | DUFFMAN, MARY WEBB | 722329579 |
| 78 | BENNETT, JESSICA SOPHIA BENNETT, RYAN CLARK | 722416567 |
| 79 | SMITH, SCOTT ROBERT SMITH, KIMBERLY DAWN | 722416644 |
| 80 | CRESCENT APEX LLC | 722416751 |
| 81 | CRESCENT APEX LLC | 722416778 |
| 82 | CRESCENT APEX LLC | 722416847 |
| 83 | VLADIMIROVA, ANNA V HOBBS, MERLIN E | 722417467 |
| 84 | DUDDUKURI, VENKATA SANDEEP KUMAR ALLU, SOWMYA | 722417511 |
| 85 | CRESCENT APEX LLC | 722418579 |
| 86 | CRESCENT APEX LLC | 722418624 |
| 87 | CRESCENT APEX LLC | 722419526 |
| 88 | CRESCENT APEX LLC | 722419572 |
| 89 | CRESCENT APEX LLC | 722419696 |

| Certified List of Neighboring Property Owners | | |
|---|---|---|
| # | OWNER | PIN |
| 90 | LAHRMAN, GREGORY E TRUSTEE GREGORY E. LAHRMAN REVOCABLE LIVING TRUST | 722420650 |
| 91 | SWEETWATER PROPERTY OWNERS ASSOCIATION, INC | 722421400 |
| 92 | FUNNA, KUCHI FUNNA, KUCHI M | 722421612 |
| 93 | CRESCENT APEX LLC | 722424038 |
| 94 | CRESCENT APEX LLC | 722429361 |
| 95 | PILLA, ANTHONY MICHAEL PILLA, ANGELA | 722510428 |
| 96 | ASPNES, DAVID E BALL, CYNTHIA J | 721487120 |
| 97 | GOODWIN, EDWIN A | 721492629 |
| 98 | FOSTER FARM LLC | 721585231 |
| 99 | MICHALSKI, TIMOTHY MICHALSKI, RHIANNON | 721590573 |
| 100 | FOSTER FARM LLC | 721592562 |
| 101 | FOSTER, FRANK A COPELAND, REBECCA | 721595134 |
| 102 | HACKNEY, CHARLES LEON HACKNEY, JUDY G | 722406699 |
| 103 | HACKNEY, JUDY G | 722411102 |
| 104 | CRESCENT APEX LLC | 722418369 |
| 105 | PALANIAPPAN, RAMANATHAN VIJAYAKUMAR, HARIPRABHA | 722418413 |
| 106 | CRESCENT APEX LLC | 722419315 |
| 107 | MULLEN, RICHARD ANDREW MULLEN, ELIZABETH CATHERINE | 722419361 |
| 108 | PERKINS, ELIZABETH E | 722503152 |
| 109 | BASS, MICHAEL E BASS, SHERRIE L | 722503445 |
| 110 | BASS, MICHAEL E | 722505167 |
| 111 | DUGGAN, KIM-MARIE DUGGAN, DOMINICK | 722510237 |
| 112 | CRESCENT APEX LLC | 722510474 |
| 113 | MONGONE, MERRIDITH MONGONE, FRANK | 722511203 |
| 114 | CRESCENT APEX LLC | 722511431 |
| 115 | CRESCENT APEX LLC | 722512006 |
| 116 | TRUSTEES OF THE PINOT PARTNERS REVOCABLE LIVING TR | 722512179 |
| 117 | OGNIBENE, DOMINICK OGNIBENE, MARIE ELENA | 722512201 |
| 118 | CRESCENT APEX LLC | 722513145 |
| 119 | CRESCENT APEX LLC | 722513341 |
| 120 | CRESCENT APEX LLC | 722514101 |
| 121 | CRESCENT APEX LLC | 722528250 |

## DEVELOPMENT NAME APPROVAL APPLICATION

Application #: 20CZ14 Submittal Date: 11-2-20

### Proposed Subdivision/Development Information

Description of location: 2600, 2500, & 0 Olive Chapel Road

Nearest intersecting roads: Olive Chapel Road / Kythira Drive

Wake County PIN(s): 0721492629, 0722406699, & 0722411102

Township: Apex

### Contact Information (as appropriate)

Contact person: Brendie Vega

Phone number: 919.535.5212 Fax number:

Address: 137 S. Wilmington Street, Suite 200

E-mail address: bvega@withersravenel.com

Owner:

Phone number: Fax number:

Address:

E-mail address:

### Proposed Subdivision/Development Name

1st Choice: TBD at time of Subdivision

2nd Choice *(Optional)*:

**Town of Apex Staff Approval:**

Town of Apex Planning Department Staff Date

# NOTICE OF ELECTRONIC NEIGHBORHOOD MEETING

This document is a public record under the North Carolina Public Records Act and may be published on the Town's website or disclosed to third parties.

10/16/2020
Date

Dear Neighbor:
You are invited to an electronic neighborhood meeting to review and discuss the development proposal at

2600, 2500, and 0 Olive Chapel Road — Address(es)

0721492629, 0722406699, & 0722411102 — PIN(s)

in accordance with the Town of Apex Electronic Neighborhood Meeting procedures. This meeting is intended to be a way for the applicant to discuss the project and review the proposed plans with adjacent neighbors and neighborhood organizations before the submittal of an application to the Town. This provides neighbors an opportunity to raise questions and discuss any concerns about the impacts of the project before it is officially submitted. If you are unable to attend, you may contact the applicant before or after the meeting is held. Once an application has been submitted to the Town, it may be tracked using the Interactive Development Map or the Apex Development Report located on the Town of Apex website at www.apexnc.org. If at all feasible given emergency declarations, limits on in-person gatherings, and social distancing, an additional in-person Neighborhood Meeting may be scheduled and held prior to a public hearing or staff decision on the application.

An Electronic Neighborhood Meeting is required because this project includes (check all that apply):

| | Application Type | Approving Authority |
|---|---|---|
| ☒ | Rezoning (including Planned Unit Development) | Town Council |
| ☐ | Major Site Plan | Town Council (QJPH*) |
| ☐ | Special Use Permit | Town Council (QJPH*) |
| ☐ | Residential Master Subdivision Plan (excludes exempt subdivisions) | Technical Review Committee (staff) |

*Quasi-Judicial Public Hearing: The Town Council cannot discuss the project prior to the public hearing.

The following is a description of the proposal (also see attached map(s) and/or plan sheet(s)):

This project involves the proposed rezoning of parcels zoned RR and R-80W to be zoned to PUD-CZ.

The proposed development is intended to be a residential development with a mix of housing products.

(A concept plan will be posted on the project website the day of the meeting.)

Estimated submittal date: 11.02.2020

**MEETING INFORMATION:**

| | |
|---|---|
| Property Owner(s) name(s): | Goodwin, Edwin A; Hackney, Charles Leon Hackney, Judy G; & Hackney, Judy G |
| Applicant(s): | WithersRavenel |
| Contact information (email/phone): | bvega@withersravenel.com / 919.535.5212 |
| Electronic Meeting invitation/call in info: | Meeting Website: https://withersravenel.com/meeting/hackney-tracts-rezoning-neighborhood-meeting/<br>Call-In Option: 1-415-655-0001<br>Event number: 171 659 8744 |
| Date of meeting**: | 10.29.2020 |
| Time of meeting**: | 5:00pm - 7:00pm |

**MEETING AGENDA TIMES:**

Welcome: 5:00pm Project Presentation: 5:10pm Question & Answer: 6:30pm

**Meetings shall occur between 5:00 p.m.-9:00 p.m. on a Monday through Thursday (excluding Town recognized holidays). If you have questions about the general process for this application, please contact the Planning Department at 919-249-3426. You may also find information about the Apex Planning Department and on-going planning efforts at http://www.apexnc.org/180/Planning.

# PROJECT CONTACT INFORMATION

This document is a public record under the North Carolina Public Records Act and may be published on the Town's website or disclosed to third parties.

## Development Contacts:

Project Name: Hackney Tracts Zoning: RR & R-80W (Prop. PUD-CZ)

Location: 2600, 2500, & 0 Olive Chapel Road

Property PIN(s): 0721492629, 0722406699, & 0722411102 Acreage/Square Feet: 79.79 ac. / 3,475,652 sq. ft.

Property Owner: Goodwin, Edwin A; Hackney, Charles Leon Hackney, Judy G; & Hackney, Judy G

Address: 2505 Olive Chapel Road

City: Apex State: NC Zip: 27502

Phone: Email:

Developer: Glenda S. Toppe and Associates

Address: 4139 Gardenlake Drive

City: Raleigh State: NC Zip: 27612

Phone: Fax: Email:

Engineer: WithersRavenel

Address: 137 S. Wilmington Street, Suite 200

City: Raleigh State: NC Zip: 27601

Phone: 919.535.5212 Fax: Email: bvega@withersravenel.com

Builder (if known):

Address:

City: State: Zip:

Phone: Fax: Email:

**Please note that Town staff will not have complete information about a proposed development until the application is submitted for review. If you have a question about Town development standards and how they relate to the proposed development, please contact the appropriate staff person listed below.**

## Town of Apex Department Contacts

| | |
|---|---|
| Planning Department Main Number<br>(Provide development name or location to be routed to correct planner) | <br>(919) 249-3426 |
| Parks, Recreation & Cultural Resources Department<br>Angela Reincke, Parks Planner | <br>(919) 249-7468 |
| Public Works - Transportation<br>Russell Dalton, Senior Transportation Engineer | <br>(919) 249-3358 |
| Water Resources Department<br>Jessica Bolin, Senior Engineer (Stormwater, Sedimentation & Erosion Control)<br>Stan Fortier, Senior Engineer (Stormwater, Sedimentation & Erosion Control)<br>James Gregg, Utility Engineer (Water & Sewer) | <br>(919) 249-3537<br>(919) 249-1166<br>(919) 249-3324 |
| Electric Utilities Division<br>Rodney Smith, Electric Technical Services Manager | <br>(919) 249-3342 |

## Providing Input to Town Council:

Each Town Council meeting agenda includes a Public Forum time when anyone is permitted to speak for three (3) minutes on any topic with the exception of items listed as Public Hearings for that meeting. The Town Council meets on the 1st and 3rd Tuesdays of each month at 6:00 p.m. (except for holidays, see schedule of meetings at http://www.apexnc.org/838/Agendas-Minutes). You may also contact Town Council by e-mail at AllCouncil@apexnc.org.

## Private Agreements and Easement Negotiation:

The Town of Apex cannot enforce private agreements between developers and neighbors and is not a party to the easement and right-of-way negotiation that occurs between developers and neighboring property owners for easements or rights-of-way that are necessary to build the project.

It is recommended that all private agreements be made in writing and that if a property owner feels it necessary, they should obtain private legal counsel in order to protect their interests in both private agreements and during easement negotiations. The only conditions that the Town of Apex can enforce are those conditions that are made a part of the conditional zoning of the property by agreement of the developer and the Town.

As an example, if a developer offers to build a fence for a neighbor to mitigate some impact, the Town can only enforce the construction of the fence if the fence becomes a condition of the rezoning. This would occur by the developer offering the condition as part of their conditional zoning application package or at the Town Council public hearing on the conditional zoning and the Town accepting it as a condition. Private agreements regarding a fence being constructed will not be enforced by the Town.

To request that any agreement with a developer is made a part of the conditional zoning at the time of approval, you may ask at the Town Council public hearing if the agreement is included in the conditions. If it is not, you may request that the Town Council not approve the rezoning without the agreement being included in the conditions (note that it is up to Town Council whether to approve or deny the rezoning but they cannot impose conditions that the applicant does not agree to add). The developer's proposed conditions can be viewed any time after a rezoning is submitted on the Interactive Development Map at: http://apexnc.maps.arcgis.com/apps/OnePane/basicviewer/index.html?appid=fa9ba2017b784030b15ef4da27d9e795

## Documentation:

Neighbors to a requested new development and/or rezoning are strongly encouraged to fully document (such as through dated photographs) the condition of their property before any work is initiated for the new development. Stormwater controls installed on developed property are not designed to and will likely not remove 100% of the soil particles transported by stormwater runoff. As a result, creeks and ponds could become cloudy for a period of time after rain events.

# COMMON CONSTRUCTION ISSUES & WHO TO CALL

This document is a public record under the North Carolina Public Records Act and may be published on the Town's website or disclosed to third parties.

**Noise & Hours of Construction:** **Non-Emergency Police** **919-362-8661**

Noise from tree removal, grading, excavating, paving, and building structures is a routine part of the construction process. The Town generally limits construction hours from 7:00 a.m. to 8:30 p.m. so that there are quiet times even during the construction process. Note that construction outside of these hours is allowed with special permission from the Town when it makes more sense to have the construction occur at night, often to avoid traffic issues. In addition, the Town limits hours of blasting rock to Monday through Friday from 8:00 a.m. to 5:00 p.m. Report violations of construction hours and other noise complaints to the Non-Emergency Police phone number at 919-362-8661.

**Construction Traffic:** **James Misciagno** **919-372-7470**

Construction truck traffic will be heavy throughout the development process, including but not limited to removal of trees from site, loads of dirt coming in and/or out of the site, construction materials such as brick and wood brought to the site, asphalt and concrete trucks come in to pave, etc. The Town requires a construction entrance that is graveled to try to prevent as much dirt from leaving the site as possible. If dirt does get into the road, the Town can require they clean the street (see "Dirt in the Road" below).

**Road Damage & Traffic Control:** **Water Resources – Infrastructure Inspections** **919-362-8166**

There can be issues with roadway damage, roadway improvements, and traffic control. Potholes, rutting, inadequate lanes/signing/striping, poor traffic control, blocked sidewalks/paths are all common issues that should be reported to Water Resources – Infrastructure Inspections at 919-249-3427. The Town will get NCDOT involved if needed.

**Parking Violations:** **Non-Emergency Police** **919-362-8661**

Unless a neighbor gives permission, there should be no construction parking in neighbors' driveways or on their property. Note that parking in the right-of-way is allowed, but Town regulations prohibit parking within 15 feet of driveways so as not to block sight triangles. Trespassing and parking complaints should be reported to the Non-Emergency Police phone number at 919-362-8661.

**Dirt in the Road:** **James Misciagno** **919-372-7470**

Sediment (dirt) and mud gets into the existing roads due to rain events and/or vehicle traffic. These incidents should be reported to James Misciagno. He will coordinate the cleaning of the roadways with the developer.

**Dirt on Properties or in Streams:** **James Misciagno** **919-372-7470**
**Danny Smith** **Danny.Smith@ncdenr.gov**

Sediment (dirt) can leave the site and get onto adjacent properties or into streams and stream buffers; it is typically transported off-site by rain events. These incidents should be reported to James Misciagno at 919-372-7470 so that he can coordinate the appropriate repairs with the developer. Impacts to the streams and stream buffers should also be reported to Danny Smith (danny.smith@ncdenr.gov) with the State.

**Dust:** **James Misciagno** **919-372-7470**

During dry weather dust often becomes a problem blowing into existing neighborhoods or roadways. These incidents should be reported to James Misciagno at 919-372-7470 so that he can coordinate the use of water trucks onsite with the grading contractor to help control the dust.

**Trash:** **James Misciagno** **919-372-7470**

Excessive garbage and construction debris can blow around on a site or even off of the site. These incidents should be reported to James Misciagno at 919-372-7470. He will coordinate the cleanup and trash collection with the developer/home builder.

**Temporary Sediment Basins:** **James Misciagno** **919-372-7470**

Temporary sediment basins during construction (prior to the conversion to the final stormwater pond) are often quite unattractive. Concerns should be reported to James Misciagno at 919-372-7470 so that he can coordinate the cleaning and/or mowing of the slopes and bottom of the pond with the developer.

**Stormwater Control Measures:** **Jessica Bolin** **919-249-3537**

Post-construction concerns related to Stormwater Control Measures (typically a stormwater pond) such as conversion and long-term maintenance should be reported to Mike Deaton at 919-249-3413.

**Electric Utility Installation:** **Rodney Smith** **919-249-3342**

Concerns with electric utility installation can be addressed by the Apex Electric Utilities Department. Contact Rodney Smith at 919-249-3342.




# Vicinity Exhibit

WithersRavenel
Our People. Your Success.

N

0 500 1,000 2,000 ft

1 inch = 1,000 feet



***Disclaimer***

*iMaps makes every effort to produce and publish the most current and accurate information possible. However, the maps are produced for information purposes, and are **NOT** surveys. No warranties, expressed or implied ,are provided for the data therein, its use,or its interpretation.*

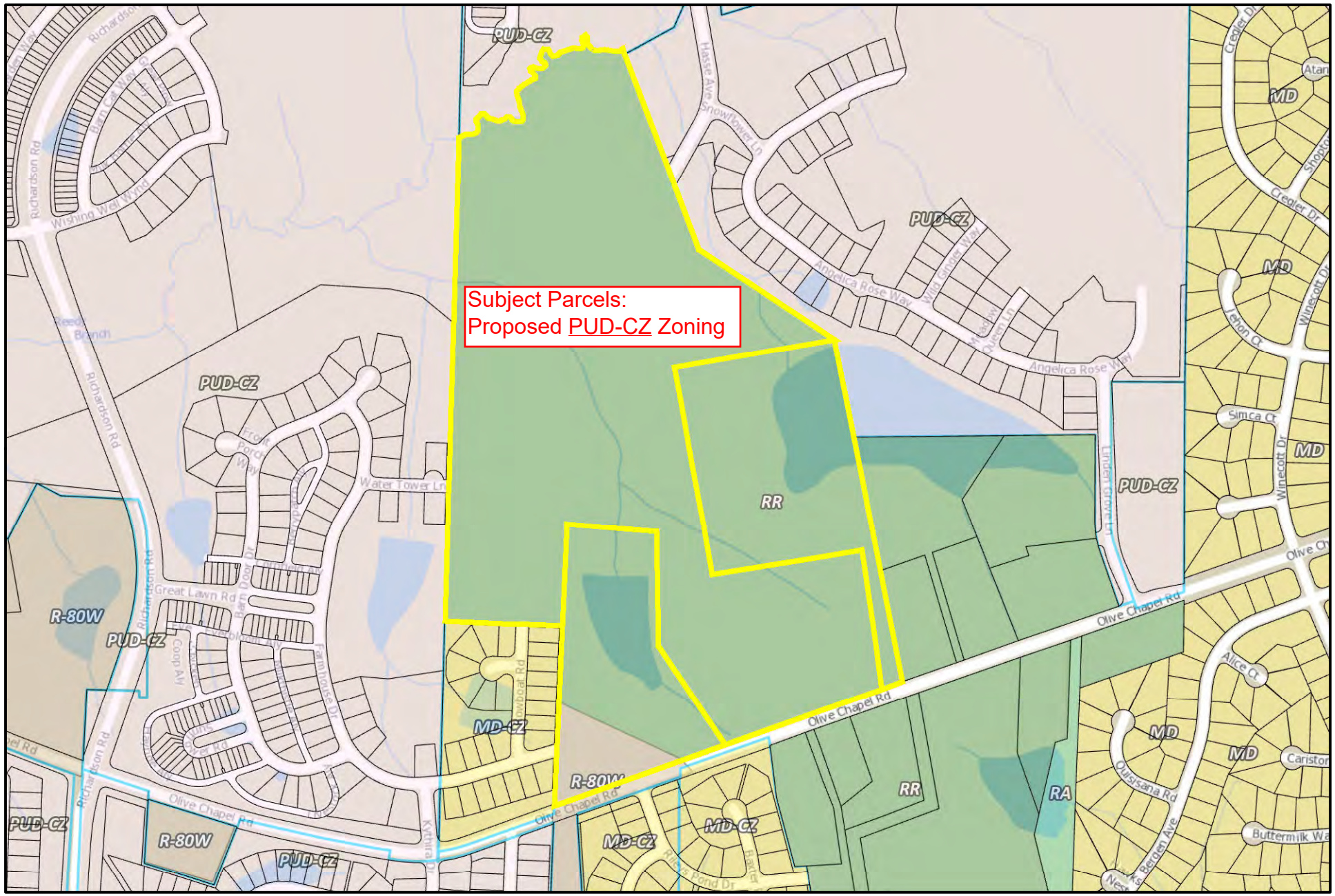


## Zoning Exhibit

WithersRavenel
Our People. Your Success.

N

0 265 530 1,060 ft

1 inch = 500 feet



***Disclaimer***
*iMaps makes every effort to produce and publish the most current and accurate information possible. However, the maps are produced for information purposes, and are **NOT** surveys. No warranties, expressed or implied ,are provided for the data therein, its use,or its interpretation.*

Hackney PUD Rezoning Neighborhood Meeting
Attendees

Meeting Date: October 29th, 2020
Meeting Time: 5:00pm - 7:00pm

| Attendance Count | First Name | Last Name | Affiliation | Email |
|---|---|---|---|---|
| 1 | Brendie | Vega | Project Team | [redacted] |
| 2 | Nick | Antrilli | Project Team | |
| 3 | Bryant | Inge | Project Team | |
| 4 | Glenda | Toppe | Project Team | |
| 5 | Daniel | Rauh | Project Team | |
| 6 | Jaime | Hackney | Neighbor | |
| 7 | Cynthia | Ball | Neighbor | |
| 8 | Jaime | Hackney | Neighbor | |
| 9 | Cynthia | Ball | Neighbor | |
| 10 | maysam | aljader | Neighbor | |
| 11 | Andrew | Suriano | Neighbor | |
| 12 | Randy | King | Neighbor | |
| 13 | Chris | Mock | Neighbor | |
| 14 | Melinda | Dyk | Neighbor | |
| 15 | David | Aspnes | Neighbor | |
| 16 | Ryan | Brumfield | Neighbor | |
| 17 | Thomas | Ball | Neighbor | |
| 18 | Kenny | Choi | Neighbor | |
| 19 | Beverly | Rubin | Neighbor | |
| 20 | Tracy | Giuliani | Neighbor | |
| 21 | Wes | Pitman | Neighbor | |
| 22 | Shruti | Uchil | Neighbor | |
| 23 | Maureen | Schmitt | Neighbor | |
| 24 | Fabrice | Lacoste | Neighbor | |
| 25 | Steven | McNally | Neighbor | |
| 26 | Felipe | Ledesma | Neighbor | |
| 27 | Pieter | de Ridder | Neighbor | |

# Hackney PUD Rezoning: Virtual Neighborhood Notification Meeting

October 29, 2020 5:00pm-7:00pm

## Project Representatives:

- Brendie Vega
- Glenda Toppe
- Daniel Rauh
- Nick Antrilli
- Bryant Inge

## Meeting Slides:

- Welcome
- Vicinity Map
- Jurisdiction Map
- Current Zoning
- Floodplains Map
- Future Land Use Map
- Future Transportation Maps
- Conceptual Layout
- Schedule of Project

## Neighbor Questions:

Q: What does the MD-CZ zoning mean? Our house is within that so what does that mean for us?

A: Medium Density Conditional Zoning. Medium density residential zoning with specific conditions imparted on the land that are determined during the rezoning process. Your land is subject to the zoning conditions of the land.

Q: We live at 2800 Treeswing - what is happening with the piece of land behind us with the deer stand?

A: That is part of the rezoning parcels. Specific site features are not yet determined as we are early in the rezoning process.

Q: Is there any possibility the existing pond south of Hasse would be filled in?

A: It is too early to tell what features will be kept or modified on the site. There is no current intent to drain it.

Q: On the conceptual layout slide, are the lighter blue areas water retention ponds? If so, is it a city requirement that they would need to be fenced in for child safety?

A: There is no municipal requirement to fence these features.

Q: Will the 2 existing large ponds be accessible to the community?

A: It is too early to tell what the programming of the internal amenities will look like. Land will probably be turned over to the HOA.

Q: Where will the entrances be located on Olive Chapel Road? Will the road be widened?

A: The developer will be required to install ½ of the road widening as designated on the future transportation plan. The conceptual drawings show an early proposed entrance.

Q: When will a detailed road network and home layout be developed and available for review?

A: This will be up to the developers. If it happens soon, it would come out around the beginning of the year.

Q: (There were numerous questions concerning the internal connections within and throughout the site)

A: Using the Town of Apex Future Thoroughfare Map, we explained that the connections into and out of the site will be required to follow the transportation map. The conceptual layout demonstrated a conceptual internal roadway connection through the site.

Q: (There were multiple questions concerning when the project would begin.)

A: We expect the project to begin within 12 – 15 months, although this is dependent on many factors.

Q: I have a few questions. 1) is a builder planned yet. 2) We do not have a road ext sign on Water Tower Lane. We were told when we bought unless it was Lennar, other builders were not required to connect.

A: No builder planned yet. The developer generally will not have an impact on whether or not a road extension is provided. That is generally guided by the future transportation maps of the municipality.

Q: Will bordering communities have a say on the design of the community (location of Townhomes vs single family)?

A: Please reach out to us with your input and we will pass it along to the developer once one is identified.

Q: What are the construction hours in Apex.

A: 7:00am to 7:00pm during the normal work week. Weekends and holidays vary.

Q: What is going to happen to the trees in the lot?

A: There are no detailed plans for the site yet. There are certain environmental protection areas in place where trees will remain.

Q: There are some very old ok trees bordering hackney and Lennar preservation. Literally on the border. Greater than 50" diameter. Will these be preserved?

A: We are required to do a tree survey and protect trees above a certain caliper. Additionally, if the trees are located near the site border, then they should be protected.

Q: What elementary school would serve this community?

A: (Answered by another Neighbor) It's currently Olive Chapel (capped) followed by Salem (capped) and then Turner Creek.

Q: (There was a question concerning the western pond near Rowboat Road and future development.)

A: There is probably not going to be road or home development in that area, although there are no finalized plans at this time.

Q: Would perimeter buffers be maintained or would the development be opened up?

A: Buffers are required between neighborhoods.

## Neighborhood Comments:

C: Don't fill the ponds.

C: Like to Like: Single-family should be designed adjacent to existing single-family homes.

C: Support townhomes along proposed main thoroughfare.

# AFFIDAVIT OF CONDUCTING AN ELECTRONIC NEIGHBORHOOD MEETING AND ISSUES/RESPONSES SUBMITTAL

This document is a public record under the North Carolina Public Records Act and may be published on the Town's website or disclosed to third parties.

I, Brendie Vega, do hereby declare as follows:
Print Name

1. I have conducted an Electronic Neighborhood Meeting for the proposed Rezoning, Major Site Plan, Residential Master Subdivision Plan, or Special Use Permit in accordance with UDO Sec. 2.2.7 *Neighborhood Meeting*.

2. The meeting invitations were mailed to the Apex Planning Department, all property owners within 300 feet of the subject property and any neighborhood association that represents citizens in the area via first class mail a minimum of 10 days in advance of the Electronic Neighborhood Meeting.

3. The meeting was conducted via WebEx (indicate format of meeting) on 10/29/2020 (date) from 5 pm (start time) to 7 pm (end time).

4. I have included the mailing list, meeting invitation, attendance sheet issue/response summary, and zoning map/reduced plans with the application.

5. I have prepared these materials in good faith and to the best of my ability.

11/02/2020
Date

By: Brendie Vega

STATE OF NORTH CAROLINA
COUNTY OF WAKE

Sworn and subscribed before me, Jeri Chastain Pederson, a Notary Public for the above State and County, on this the 2 day of November, 2020.

SEAL

JERI CHASTAIN PEDERSON
Notary Public
Wake County, North Carolina
My Commission Expires
March 10, 2024

Jeri Chastain Pederson
Notary Public

Jeri Chastain Pederson
Print Name

My Commission Expires: 03/10/2024

# PD PLAN

# Hackney Planned Unit Development

## APEX, NORTH CAROLINA

## APPLICANT

WithersRavenel
137 S Wilmington Street Suite 200
Raleigh, NC 27601

## Date: March 2, 2021

WithersRavenel
Our People. Your Success.

# TABLE OF CONTENTS

## CONTENTS


1.0 Vicinity Map ..... 3
2.0 Project Data ..... 4
3.0 Proposed List of Uses ..... 5
4.0 Purpose Statement ..... 5
5.0 Proposed Design and Architectural Controls ..... 6
6.0 Buffers ..... 7
7.0 Natural Resources and Environment ..... 8
8.0 Stormwater Management Requirements ..... 10
9.0 Parks, Recreation and Cultural Resources ..... 11
10.0 Parking and Loading ..... 11
11.0 Signage ..... 11
12.0 Public Facilities Requirements ..... 11
13.0 Phasing Plan ..... 13
14.0 Consistency with 2045 Land Use Plan ..... 14
15.0 Consistency with Unified Development Ordinance ..... 14
16.0 Elevations ..... 14
17.0 Affordable Housing ..... 14

## 1.0 VICINITY MAP

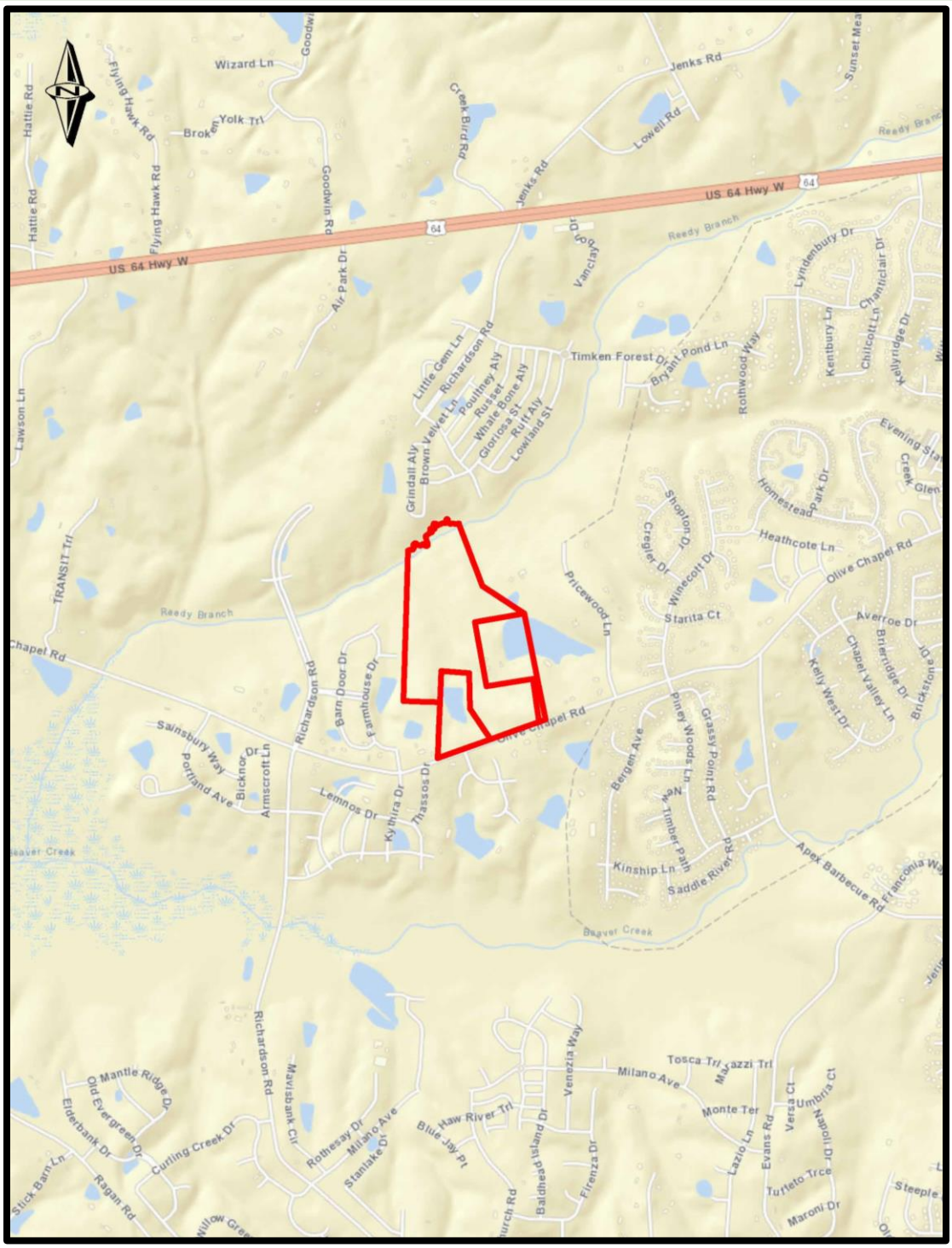


Project Parcels: Not to Scale

## 2.0 PROJECT DATA

| | | |
|---|---|---|
| Name of Project | Hackney Planned Unit Development | |
| PIN(s) | 0721492629<br>0722406699<br>0722411102 | |
| Preparer/Owner Information | Prepared by | WithersRavenel<br>137 S. Wilmington Street, Suite 200<br>Raleigh, NC 27601<br>Phone: 919.469.3340<br>Fax: 919.467.6008<br>Email:<br>Brendie Vega, AICP, CNU-A<br>bvega@withersravenel.com<br>Bryant Inge, PE<br>binge@withersravenel.com |
| | Owners | Hackney, Charles Leon<br>Hackney, Judy G<br>Goodwin, Edwin A<br>2505 Olive Chapel Rd<br>Apex, NC 27502-6788 |
| Current Zoning Designation | Rural Residential (RR) & Residential-80W (R-80W) | |
| Proposed Zoning Designation | Planned Unit Development (PUD-CZ) | |
| Current 2045 Land Use Map Designation | Medium Density Residential | |
| Proposed 2045 Land Use Map Designation | No Proposed Change (Medium Density) | |
| Area of Tracts (ac.) | 10.01, 11.91, & 57.87 (79.79 ac. total) | |

## 3.0 PROPOSED LIST OF USES

The Rezoned Lands may be used for, and only for, the uses listed immediately below. The permitted uses are subject to the limitations and regulations stated in the UDO and any additional limitations or regulations stated below. For convenience, some relevant sections of the UDO may be referenced; such references do not imply that other sections of the UDO do not apply.

**Residential**

- Single-Family
- Accessory Dwelling Unit
- Townhouse

**Non-Residential**

- Utility, Minor
- Greenway
- Park, Active
- Park, Passive

## 4.0 PURPOSE STATEMENT

The Hackney Planned Unit Development Conceptual Layout has been designed in order to help establish appropriately sized residential opportunities along Olive Chapel Road. Development is intended to reflect the neighboring residential communities in both density and product. This residential development philosophy is in line with the 2045 Apex Future Land Use Plan designation of “Medium Density Residential”. The site will provide a mixture of amenities and strategic infrastructure connections for future residents to navigate the community.

## 5.0 PROPOSED DESIGN AND ARCHITECTURAL CONTROLS

| | | | |
|---|---|---|---|
| Maximum Densities (du/Acre) | 4.0 du/acre | | |
| Maximum Height of Buildings | 50 feet | | |
| Setbacks: Single-Family | Front:<br>5' from façade<br>20' from garage to back of sidewalk | Side: 5'<br>Corner Side: 8' | Rear: 10' |
| Setbacks: Townhouse, Front loaded | Front:<br>10' from façade<br>20' from garage to back of sidewalk | Side: 5'<br>Building to Building: 10' | Rear: 10' |
| Setbacks: Townhouse, Alley loaded | Front:<br>10' from façade | Side: 5'<br>Building to Building: 10' | Rear: 5' |
| Amount and Percentage of Built Upon Area Allowed | 70% | | |
| Amount and Percentage of Proposed Built Upon Area (Max) | 70% | | |

1. Vinyl siding is not permitted; however, vinyl windows, decorative elements and trim are permitted.
2. The roofline cannot be a single mass; it must be broken up horizontally and vertically between every unit.
3. Garage doors must have windows, decorative details or carriage-style adornments on them.
4. The rear and side elevations of the units that can be seen from the right-of-way shall have trim around the windows.

5. The visible side of a townhome on a corner lot facing the public street shall contain at least 2 decorative elements such as, but not limited to, the following elements:

- Windows
- Bay window
- Recessed window
- Decorative window
- Trim around the windows
- Wrap-around porch or side porch
- Two or more building materials
- Decorative brick/stone
- Decorative trim
- Decorative shake
- Decorative air vents on gables
- Decorative gable
- Decorative cornice
- Column
- Portico
- Balcony
- Dormer

6. The garage cannot protrude more than 1-foot from either the front façade or porch.

## 6.0 BUFFERS

Perimeter Buffers shall be designated as such:

| | |
|---|---|
| North | 100' Stream Buffer |
| East | 20' Type A Buffer |
| South | 30' Type E Buffer* |
| West | 20' Type A Buffer |

*A 30' Type B Buffer shall be provided if homes along Olive Chapel Road are not alley-loaded.

## 7.0 NATURAL RESOURCES AND ENVIRONMENT

**Watershed**

The Hackney Planned Unit Development is located within the Primary Watershed Protection Overlay District and is therefore subject to the requirements outlined in Section 6.1 of the Town of Apex Unified Development Ordinance.

**Floodplain**

The parcels that make up the Site do contain a small portion of FEMA designated 100-year floodplains near the site s northern termination according to FEMA FIRM Panel 3720072200J, effective 05/02/2006.

**Resource Conservation**

The Site is also subject to the Resource Conservation Area requirements outlined in the Town of Apex Unified Development Ordinance.

The PUD will meet the requirements of:

8.1.2.C.1 *Planned Developments*. The RCA for all planned developments shall be determined by the Town Council per Sec. 2.3.4.F.1.c and per Sec. 8.1.2.C.4, 5, 6, 7, or 10 as applicable.

8.1.2.C.4 *Development located south and west of NC 540*. All developments which do not meet the criteria of subsections 8.1.2.C.3 or 10 and which are located south and west of NC 540 shall provide buffers and RCA equal to or greater than 30% of the gross site acreage for single-family and townhome uses and 25% of the gross site acreage for multi-family, mixed-use, and non-residential uses.

Per UDO Section 7.2.5.B.8, if any mass grading is proposed in the single-family sections of the PUD, the following provision will apply to lot coverage area for single-family: An additional five percent (5%) Resource Conservation Area (RCA) shall be set aside. This requirement is added to the standard RCA percentage requirement found in Sec. 8.1.2.C Size of the RCA.

**Tree Replanting**

Existing deciduous trees greater than 18" in diameter (DBH), as identified in the tree survey, that are removed by site development shall be replaced by planting a 1.5" caliper native tree from the Town of Apex Design and Development Manual as a street tree or as other required landscaping. Excess required tree replacement will occur in common open space areas.

**Clean Energy**

Residential dwelling units will be provided with solar conduit to accommodate the future installation of solar panels.

**Water Quality**

Signs will be installed near SCMs in order to:

1. Reduce pet waste near SCM drainage areas.
2. Reduce fertilizer near SCM drainage areas.

Installation of Pet Waste Stations in common areas will occur within the neighborhood.

**Planting and Landscaping**

Install Warm Season grasses (Bermuda, Zoysia, etc) in lawn areas to reduce the need for irrigation and chemicals.

Install required Street Trees, Buffer and Re-Vegetation plantings that consist of a variety of native plant materials recognized by the New Hope Audubon Society or the NCSU manual for Landscaping for Wildlife with Native Plants as being bird and pollinator friendly; as allowed by the Town of Apex Design & Development Manual or approved by Apex Staff.

Specify pocket park plantings that are recognized by the NC Wildlife Federation as being Native Pollinator Plants as part of the Statewide Butterfly Highway initiative.

Include at least 4 native hardwood tree varieties in the proposed plantings, as allowed by the Apex Design and Development Manual.

**Environmental Resources**

The site will provide the following:

1. Purchase 20 bird houses from the New Hope Audubon Society (or other non-profit) and install in natural areas within the site.
2. Retain the 2 existing ponds if engineering studies confirm that the existing dams are structurally sound and meet regulatory requirements.

**Historic Preservation**

According to the North Carolina Historic Preservation Office s HPOWEB 2.0 Mapping application, there are no historic structures contained on the Site.

## 8.0 STORMWATER MANAGEMENT REQUIREMENTS

The parcels on which the development is proposed upon currently consist of a few existing structures, some cleared lands, and wooded lands. Two ponds exist on the parcels and drain to Reedy Branch Creek, eventually feeding into Jordan Lake. The proposed development plan will require stormwater management measures in accordance with Sections 6.1 and 7.5.7 in the Town of Apex Unified Development Ordinance. Stormwater captured on the site will be conveyed to proposed Stormwater Control Measures, which will be identified on plans during the major subdivision or site plan approval stage. Post-development peak runoff shall not exceed pre-development peak runoff for the 24-hour, 1-year and 10-year storm events in accordance with the Unified Development Ordinance. Treatment for the first 1-inch of runoff will be provided such that the removal of 85% Total Suspended Solids is achieved. All stormwater devices will meet the design requirements of NCDENR and the Town of Apex.

## 9.0 PARKS, RECREATION AND CULTURAL RESOURCES

The Apex Parks, Recreation and Cultural Resources Advisory Commission met on December 9, 2020 and unanimously recommended a fee-in-lieu of dedication with credit for construction of greenway which connects Sidepath along Hasse Ave to the west connecting to the Reedy Branch Greenway in Smith Farm. The fee rate will be set at the time of Town Council Review/ Approval and the credit for construction will be calculated prior to construction plan approval. Per the UDO Art 14, the greenway must be completed and accepted prior to 25% of the building permits for the project being issued.

## 10.0 PARKING AND LOADING

All parking provided on the Site will comply with the requirements outlined in Section 8.3 of the Town of Apex Unified Development Ordinance. Per 8.3.4(C) of the UDO, guest parking shall be designated within common areas and be distributed throughout residential projects. Striped on-street parking may be counted toward guest parking requirements. For Townhouse, guest parking shall be distributed so that there is at least one parking space within 200' of each townhouse lot.

## 11.0 SIGNAGE

All signage on the Site will comply with the requirements outlined in Section 8.7 of the Town of Apex Unified Development Ordinance.

## 12.0 PUBLIC FACILITIES REQUIREMENTS

**All utilities shall meet the Town of Apex Master Utility Maps.**

**Sanitary Sewer Service**

All on-site sanitary sewer lines will be extended to the property lines to allow future interconnectivity of properties. The design of the sanitary sewer will be according to the Town of Apex Engineering Standards and Specifications while accounting for downstream capacity and future upstream development. Sanitary Sewer easements will be established for public sewer outside of the Public R/W.

**Gas**

The Public Service Company of North Carolina (PSNC) will require a revenue analysis based on the proposed development in order to determine the applicable costs to the developer for installation of infrastructure.

**Electric Service**

The Site is in the service area of both the Town of Apex Electric Utilities and Progress Energy and the applicant will select the Town of Apex to serve as the electric provider.

**Roadways**

The Site will require an internal public roadway network and parking spaces. The onsite transportation circulation system shall be consistent with the Town of Apex Transportation Plan and the Town of Apex Standard Specifications and Standard Details and show required right-of-way widths and road sections.

Hasse Avenue will be constructed between Olive Chapel Road and its current terminus north of the project. Olive Chapel Road will be widened to include construction of a 100-foot eastbound left-turn lane with appropriate deceleration length and taper and a 100-foot westbound right-turn lane with appropriate deceleration length and taper subject to NCDOT review and approval. The Olive Chapel Road turn lane widening will be completed prior to platting Hasse Avenue access to Olive Chapel Road and the connection to Hasse Avenue north of the project will be completed prior to the last plat in the subdivision.

A 6-foot bike lane and 5-foot paved shoulder will be located on the north side of Olive Chapel Road per the bike/ped systems map.

Per the Long-Range Transportation Map, the following roadway sections apply to this development:

- Olive Chapel Road = 4-Lane with median, widening, 110' ROW, must provide 55' from centerline
- N/S = Future Major Collector, 60' ROW
- E/W = Future Local Connection, 50' ROW

**Water Service**

All on-site water lines will be designed according to Town of Apex Engineering Standards and Specifications.

**Transit**

According to the Apex 2045 Transportation Plan, there are no existing or proposed transit routes designated on or adjacent to the Site.

**Pedestrian Facilities**

The development plan will incorporate sidewalk infrastructure along Olive Chapel Road as well as the internal street network. A trail will serve as a connection from the western portion of the community to the Reedy Branch Greenway, thus in compliance with the future land use plan.

Sidewalks will be provided on both sides of all streets for single-family detached homes.

There will be a 10-foot side path provided along minor collector roads as show on the bike/ped plan.

## 13.0 PHASING PLAN

The Hackney Planned Unit Development will be constructed in phases according to economic considerations and infrastructure requirements.

Please note the following considerations for the phasing plan:

1. Access points are preliminary in nature and subject to Town of Apex and NCDOT review and approval.
2. Limits of land disturbance within each phase shall be determined at the master subdivision plan and site plan stages.
3. Public utilities shall be provided for each phase of development.

## 14.0 CONSISTENCY WITH 2045 LAND USE PLAN

The Apex 2045 Future Land Use Map depicts the future land use of the three parcels as Medium Density Residential. Medium Density Residential lands are described in the Land Use Plan as consisting of single-family homes, duplexes, and townhomes with densities between three (3) and seven (7) dwelling units per acre. It is intended to act as a transition between higher and lower residential densities. The maximum density proposed for the Hackney Planned Unit Development is four (4) dwelling units per acre.

The Hackney Planned Unit Development proposes medium density residential housing options appropriate to its proximity to the Olive Chapel Road thoroughfare and are consistent with uses found in the surrounding communities. The uses proposed for the site are directly in line with the uses stated in the 2045 Future Apex Land Use Plan thus the proposed rezoning is consistent with the Town's future plans for this area.

## 15.0 CONSISTENCY WITH UNIFIED DEVELOPMENT ORDINANCE

The proposed development is consistent with all applicable requirements of the Town of Apex Unified Development Ordinance.

## 16.0 ELEVATIONS

Elevations provided are representative of architecture, materials, and housing types. Final elevations submitted at Major Subdivision Plan will meet the requirements of the Architectural Controls in 5.0 of this PD Plan.

## 17.0 AFFORDABLE HOUSING

If the Town of Apex has a fund or other mechanism in place to receive donations to construct, subsidize, or participate in the development of affordable housing units (the "Fund"), the developer will contribute $215 per lot to this Fund prior to the first residential Certificate of Occupancy. In the event the Fund has not been established by the Town of Apex, the money will be conveyed to a local non-profit working on affordable housing initiatives. The developer will work with the Town of Apex to identify a mutually acceptable local non-profit organization to receive these funds.

# PLANNED UNIT DEVELOPMENT

# HACKNEY

## APEX, NORTH CAROLINA

FEBRUARY 26, 2021

### SITE DATA

| | | | | | |
|---|---|---|---|---|---|
| 2045 LAND USE PLAN DESIGNATION | CURRENT | MEDIUM DENSITY RESIDENTIAL | | | |
| | PROPOSED | NO CHANGE | | | |
| ZONING | CURRENT | RURAL RESIDENTIAL (RR) (R-80W) | | | |
| | PROPOSED | PLANNED UNIT DEVELOPMENT (PUD-CZ) | | | |
| AREA OF TRACTS IN PROPOSED PUD | 0722-41-1102 | 57.87 ACRES | | | |
| | 0721-49-2629 | 10.01 ACRES | | | |
| | 0722-40-6699 | 11.91 ACRES | | | |
| | TOTAL: | 79.79 ACRES | | | |
| AREA DESIGNATED AS MIXED-USE ON 2045 LAND USE MAP | 0 ACRES | | | | |
| AREA OF MIXED-USE PROPERTY PROPOSED AS NON-RESIDENTIAL DEVELOPMENT | N/A | | | | |
| PERCENT OF MIXED-USE PROPERTY PROPOSED AS NON-RESIDENTIAL DEVELOPMENT | N/A | | | | |
| REQUESTED SEWER CAPACITY | TO BE DETERMINED | | | | |
| MAXIMUM RESIDENTIAL DENSITY | 4.0 DU/ACRE | | | | |
| MAXIMUM BUILDING HEIGHT | 50'-0" | | | | |
| SETBACKS: SINGLE FAMILY | FRONT: 5 FT FROM FACADE<br>20 FT FROM GARAGE TO BACK OF SIDEWALK | | REAR: 10 FT | SIDE: 5 FT | CORNER SIDE: 8 FT |
| SETBACKS: TOWNHOUSE, FRONT LOADED | FRONT: 10 FT FROM FACADE<br>20 FT FROM GARAGE TO BACK OF SIDEWALK | | REAR: 10 FT | SIDE: 5 FT | BUILDING TO BUILDING: 10 FT |
| SETBACKS: TOWNHOUSE, ALLEY LOADED | FRONT: 10 FT FROM FACADE | | REAR: 5 FT | SIDE: 5 FT | BUILDING TO BUILDING: 10 FT |
| WATERSHED | JORDAN LAKE WATERSHED, PRIMARY WATERSHED PROTECTION OVERLAY | | | | |
| HISTORIC STRUCTURES | N/A | | | | |
| COMMUNITY AMENITIES | COMMUNITY GATHERING SPACE WITH BENCHES, TOT LOT | | | | |
| SITE BUFFERS | NORTH | 100' STREAM BUFFER | | | |
| | EAST | 20' TYPE A BUFFER | | | |
| | SOUTH | 30' TYPE E BUFFER<br>*A 30' TYPE B BUFFER SHALL BE PROVIDED IF HOMES ALONG OLIVE CHAPEL ROAD ARE NOT ALLEY LOADED | | | |
| | WEST | 20' TYPE A BUFFER | | | |

THE APEX PARKS, RECREATION AND CULTURAL RESOURCES ADVISORY COMMISSION MET ON DECEMBER 9, 2020 AND UNANIMOUSLY RECOMMENDED A FEE-IN-LIEU OF DEDICATION WITH CREDIT FOR CONSTRUCTION OF GREENWAY WHICH CONNECTS SIDEPATH ALONG HASSE AVE TO THE WEST CONNECTING TO THE REEDY BRANCH GREENWAY IN SMITH FARM. THE FEE RATE WILL BE SET AT THE TIME OF TOWN COUNCIL REVIEW/APPROVAL AND THE CREDIT FOR CONSTRUCTION WILL BE CALCULATED PRIOR TO CONSTRUCTION PLAN APPROVAL. PER THE UDO ART 14, THE GREENWAY MUST BE COMPLETED AND ACCEPTED PRIOR TO 25% OF THE BUILDING PERMITS FOR THE PROJECT BEING ISSUED.

HASSE AVENUE WILL BE CONSTRUCTED BETWEEN OLIVE CHAPEL ROAD AND ITS CURRENT TERMINUS NORTH OF THE PROJECT. OLIVE CHAPEL ROAD WILL BE WIDENED TO INCLUDE CONSTRUCTION OF A 100-FOOT EASTBOUND LEFT-TURN LANE WITH APPROPRIATE DECELERATION LENGTH AND TAPER AND A 100-FOOT WESTBOUND RIGHT-TURN LANE WITH APPROPRIATE DECELERATION LENGTH AND TAPER SUBJECT TO NCDOT REVIEW AND APPROVAL. THE OLIVE CHAPEL ROAD TURN LANE WIDENING WILL BE COMPLETED PRIOR TO PLATTING HASSE AVENUE ACCESS TO OLIVE CHAPEL ROAD AND THE CONNECTION TO HASSE AVENUE NORTH OF THE PROJECT WILL BE COMPLETED PRIOR TO THE LAST PLAT IN THE SUBDIVISION.

### SITE MAP
1"=500'

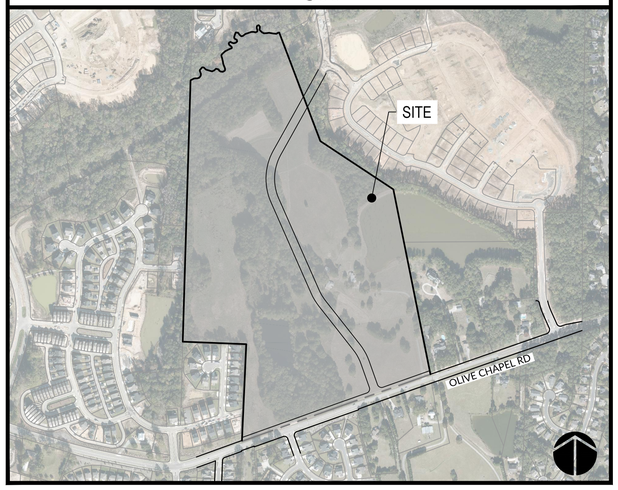


### VICINITY MAP
1"=2000'




### INDEX OF SHEETS



| SHEET NUMBER | SHEET TITLE |
|---|---|
| 0.0 | COVER |
| 1.0 | EXISTING CONDITIONS |
| 2.0 | CONCEPTUAL LAYOUT PLAN |
| 3.0 | CONCEPTUAL UTILITY PLAN |
| 4.0 | CONCEPTUAL STORMWATER MANAGEMENT PLAN |



### PREPARED BY:


WithersRavenel
Engineers | Planners | Surveyors

115 MacKenan Drive | Cary, NC 27511 | t: 919.469.3340 | license #: C-0832 | www.withersravenel.com

PLANNER: BRENDIE VEGA, AICP
BVEGA@WITHERSRAVENEL.COM

CIVIL ENGINEER: BRYANT INGE, PE
BINGE@WITHERSRAVENEL.COM


PRELIMINARY
NOT APPROVED FOR CONSTRUCTION



K:\18\18-0510\180517.20--Hackney Tract--Apex\CAD\Drawing Set\Plot\0.0 COVER.dwg- Friday, February 26, 2021 10:29:14 AM - INGE, BRYANT

EXISTING CONDITION NOTES:

1. TOPOGRAPHIC AND UTILITY INFORMATION BASED ON AVAILABLE GIS MAPPING. PRELIMINARY BOUNDARY SURVEY PREPARED BY WITHERSRAVENEL DATED 09/25/20.
2. WETLAND/STREAM INFORMATION BASED ON EVALUATION BY S&EC DATED 09/18/20 (APEX 20-004).
3. REGULATORY FEMA MAPPED FLOODPLAINS EXIST ON SITE PER FIRM MAP #3720072200J (5/2/06).
4. THE SUBJECT PROPERTY IS LOCATED WITHIN THE TOWN OF APEX PRIMARY WATERSHED PROTECTION OVERLAY DISTRICT.
5. ALL EXISTING STRUCTURES ON THE SUBJECT PROPERTY SHALL BE REMOVED PER TOWN OF APEX STANDARDS AND REQUIREMENTS.

CRESCENT APEX, LLC
DB 17044, PG 924
RCA 1
LINDEN SUBDIVISION
BM 2019, PG 1364 & 1366
PIN No. 0722512006

MICHAEL BASS
SHERRIE BASS
DB 14367, PG 1240
LOT 3
"WILLIAM E. GERRINGER"
BM 1982, PG 24
PIN No. 0722503445

ELIZABETH PERKINS
DB 14268, PG 331
LOT 1
"WILLIAM E. GERRINGER"
BM 1982, PG 24
PIN No. 0722503152

CRESCENT APEX, LLC
DB 17044, PG 924
RCA 6
LINDEN SUBDIVISION
BM 2020, PG 1334
PIN No. 0722424038

HASSE AVE
60' R/W

CRESCENT APEX, LLC
DB 17044, PG 924 RCA 1
LINDEN SUBDIVISION
BM 2019, PG 1364 & 1366
PIN No. 0722512006

CRESCENT APEX, LLC
DB 17044, PG 924
RCA 1
LINDEN SUBDIVISION
BM 2019, PG 1364 & 1366
PIN No. 0722512006

S 11°18'46" E
300.55'

S 11°21'53" E
392.29'

S 11°20'41" E
425.59'

N 09°38'52" W
538.92'

S 85°49'17" E
67.15'

N 78°41'44" E
90.50'

EXISTING POND

50' BUFFER

S 20°45'12" E
790.03'

40' UTILITY AND
PIPELINE EASEMENT
DB 14343, PG 2028

TRACT 3
PIN No. 0722406699
CHARLES L. HACKNEY
JUDY G. HACKNEY
DB 3195, PG 151
BM 1982, PG 1057
11.871 ACRES (OUTSIDE R/W)
0.045 ACRES (WITHIN R/W)
11.916 (TOTAL ACRES)

GRAVEL DRIVE

S 78°41'44" W
90.66'

SHED

SHED

ONE STORY FRAME
RESIDENCE
#2500 OLIVE CHAPEL RD

BARN

BARN

N 11°18'46" W
797.04'

S 87°51'17" W
649.82'

OLIVE CHAPEL ROAD
(SR 1160)
VARIABLE WIDTH R/W

EXISTING 1% ANNUAL
FLOOD ZONE
(ZONE AE)

N 01°36'21" E
2872.71' (TIE LINE)

APPROXIMATE
100' BUFFER

N 01°42'16" E
643.96' TO CL CREEK
643.96' TO EIP

LENNAR CAROLINAS, LLC
DB 16720, PG 1045
TRACT 3
"BOUNDARY SURVEY"
BM 2017, PG 379
PIN No. 0722229350

LENNAR CAROLINAS, LLC
DB 16720, PG 1045
TRACT 3
"BOUNDARY SURVEY"
BM 2017, PG 379
PIN No. 0722229350

EXISTING
WETLANDS

50' BUFFER

C/L OF STREAM

TRACT 1
PIN No. 0722411102
JUDY G. HACKNEY
DB 1400, PG 236
BM 1983, PG 57
51.28 ACRES (OUTSIDE R/W)
0.445 ACRES (WITHIN R/W)
51.725 (TOTAL ACRES)

EXISTING
WETLANDS

S 80°58'41" E
436.47'

S 24°47'28" E
445.61'

S 82°23'11" E
300.00'

TRACT 2
PIN No. 0721492629
EDWIN A. GOODWIN
DB 3195, PG 149 BM 1983, PG 57
9.526 ACRES (OUTSIDE R/W)
0.481 ACRES (WITHIN R/W)
10.007 (TOTAL ACRES)

EXISTING POND

RILEYS
POND DRIVE
50' R/W

S 11°15'56" W
682.56'

N 02°31'45" E
382.15'

PORTION OF PROPERTY
TO BE ANNEXED

TOWN OF APEX ELECTRIC
UTILITY EASEMENT
PER DB 13318, PG 1911

LENNAR CAROLINAS, LLC
DB 16720, PG 1062
"RCA AREA"
SMITH FARM PUD, PH 1
BM 2018, PG 924
PIN No. 0722219077

N 01°42'16" E
1151.65'

LENNAR CAROLINAS, LLC
DB 16720, PG 1062
"RCA AREA"
SMITH FARM PUD, PH 1
BM 2018, PG 923
PIN No. 0722303175

ROWBOAT ROAD
50' R/W

N 02°31'45" E
324.17'

N 87°28'05" W
49.58'

WATER
TOWER LANE
50' R/W

FARMHOUSE DRIVE
50' R/W

THASSOS DRIVE
50' R/W

LENNAR CAROLINAS, LLC
DB 16720, PG 1062
"FUTURE REC SITE"
SMITH FARM PUD, PH 1
BM 2018, PG 922 & 923
PIN No. 0722303175

SMITH FARMS OF APEX HOMEOWNERS
ASSOCIATION, INC.
DB 17177, PG 741
COMMON AREA 1
HALEY AT SMITH FARMS
BM 2018, PG 934
PIN No. 0721396548

SMITH FARMS OF APEX
HOMEOWNERS
ASSOCIATION, INC
DB 17177, PG 741
COMMON AREA 3
HALEY AT SMITH FARMS
BM 2018, PG 934
PIN No. 0722309093

SMITH FARMS OF APEX
HOMEOWNERS
ASSOCIATION, INC.
DB 17177, PG 741
COMMON AREA 2
HALEY AT SMITH FARMS
BM 2018, PG 934
PIN NO. 0721397362

PRELIMINARY
NOT APPROVED FOR
CONSTRUCTION

TREE LEGEND

- OAK
- POPLAR
- GUM
- MAPLE
- CEDAR
- PINE

| EXISTING DECIDUOUS TREES TO BE REMOVED (>18" DBH) | |
|---|---|
| TYPE | QUANTITY |
| OAK | 46 |
| POPLAR | 22 |
| GUM | 17 |
| MAPLE | 5 |
| TOTAL | 90 |

GRAPHIC SCALE
100 0 50 100 200
1 inch = 100 ft.

| No. | Revision | Date | By |
|---|---|---|---|
| | | | |

| | |
|---|---|
| Designer: WR | Scale: 1" = 100' |
| Drawn By: WR | Date: 02/26/2021 |
| Checked By: WR | Job No.: 02180517.20 |

# HACKNEY

APEX WAKE COUNTY NORTH CAROLINA

# EXISTING CONDITIONS

WithersRavenel
Engineers | Planners | Surveyors
115 MacKenan Drive | Cary, NC 27511 | t: 919.469.3340 | license #: C-0832 | www.withersravenel.com

Sheet No.
1.0



K:\181\6\05\180727 2\Hackney Tract\Apex\CAD\Drawing Set\PLOT\ 0 EXISTING CONDITIONS.dwg, Friday, February 26, 2021 10:30:02 AM, INGE.BRYANT

NOTES:

1. PLAN SHEETS ARE INTENDED FOR ILLUSTRATIVE USE ONLY.
2. PER 2.3.4(F)(1)(A)(IV) OF THE UDO, SIDEWALKS MUST BE PROVIDED ON BOTH SIDES OF ALL STREETS FOR SINGLE-FAMILY DETACHED HOMES IN PUD-CZ DEVELOPMENT DISTRICTS.
3. PER 2.3.4(F)(1)(F)(I) OF THE UDO, THE PD PLAN FOR PUD-CZ SHALL DEMONSTRATE A SAFE AND ADEQUATE ON-SITE TRANSPORTATION CIRCULATION SYSTEM. THE ON-SITE TRANSPORTATION CIRCULATION SYSTEM SHALL BE INTEGRATED WITH THE OFF-SITE TRANSPORTATION CIRCULATION SYSTEM OF THE TOWN. THE PD PLAN FOR PUD-CZ SHALL BE CONSISTENT WITH THE APEX TRANSPORTATION PLAN AND THE TOWN OF APEX STANDARD SPECIFICATIONS AND STANDARD DETAILS AND SHOW REQUIRED RIGHT-OF-WAY WIDTHS AND ROAD SECTIONS.
4. PER UDO SECTION 7.2.5.B.8, IF ANY MASS GRADING IS PROPOSED IN THE SINGLE-FAMILY SECTIONS OF THE PUD, THE FOLLOWING PROVISION WILL APPLY TO LOT COVERAGE AREA FOR SINGLE-FAMILY: AN ADDITIONAL FIVE PERCENT (5%) RESOURCE CONSERVATION AREA (RCA) SHALL BE SET ASIDE. THIS REQUIREMENT IS ADDED TO THE STANDARD RCA PERCENTAGE REQUIREMENT FOUND IN SEC. 8.1.2.C SIZE OF THE RCA.
5. COLLECTOR ROAD ALIGNMENT LOCATION WILL BE DETERMINED AT THE MAJOR SUBDIVISION PLAN STAGE.
6. EXISTING PONDS WILL BE EVALUATED BY A LICENSED ENGINEER. EVALUATION RECOMMENDATIONS MAY REQUIRE A CHANGE TO SIZE, BOUNDARY OR REMOVAL OF EXISTING PONDS.
7. A 30' TYPE B SHALL BE PROVIDED IF HOMES ALONG OLIVE CHAPEL ROAD ARE NOT ALLEY LOADED.

CRESCENT APEX, LLC
DB 17044, PG 924
RCA 1
LINDEN SUBDIVISION
BM 2019, PG 1364 & 1366
PIN No. 0722512006

MICHAEL BASS
SHERRIE BASS
DB 14367, PG 1240
LOT 3
"WILLIAM E. GERRINGER"
BM 1982, PG 24
PIN No. 0722503445

ELIZABETH PERKINS
DB 14268, PG 331
LOT 1
"WILLIAM E. GERRINGER"
BM 1982, PG 24
PIN No. 0722503152

HASSE AVE
60' R/W

CRESCENT APEX, LLC
DB 17044, PG 924
RCA 6
LINDEN SUBDIVISION
BM 2020, PG 1334
PIN No. 0722424038

CRESCENT APEX, LLC
DB 17044, PG 924 RCA 1
LINDEN SUBDIVISION
BM 2019, PG 1364 & 1366
PIN No. 0722512006

CRESCENT APEX, LLC
DB 17044, PG 924
RCA 1
LINDEN SUBDIVISION
BM 2019, PG 1364 & 1366
PIN No. 0722512006

20' TYPE A

EXISTING POND

50' BUFFER

THE PROPOSED WIDENING ON THE NORTH SIDE OF OLIVE CHAPEL ROAD WILL INCLUDE A 6' BIKE LANE AND 5' PAVED SHOULDER.

THE PROPOSED WIDENING OF OLIVE CHAPEL ROAD WILL COMPLY WITH THE TOWN OF APEX THOROUGHFARE PLAN. THE PROPOSED ROAD SECTION ON THE PROJECT SIDE OF THE CENTERLINE WILL BE A MEDIAN DIVIDED 4-LANE SECTION (110' ROW).

OLIVE CHAPEL ROAD
(SR 1160)
VARIABLE WIDTH R/W

40' UTILITY AND PIPELINE EASEMENT DB 14343, PG 2028

SCM #2

EXISTING 1% ANNUAL FLOOD ZONE (ZONE AE)

30' BUFFER SEE NOTE #7

LANDSCAPED MEDIAN AT SITE ENTRANCE

THE PROPOSED COLLECTOR ROAD WILL COMPLY WITH THE TOWN OF APEX THOROUGHFARE PLAN. THE PROPOSED ROAD SECTION WILL BE 60' WIDTH RIGHT-OF-WAY AND INCLUDE A 10' WIDTH SIDE PATH ON ONE SIDE.

PROVIDE TRAIL CONNECTION FOR COMMUNITY ACCESS TO REEDY BRANCH GREENWAY

EXISTING WETLANDS

50' BUFFER

C/L OF STREAM

SCM #3

EXISTING POND

APPROXIMATE 100' BUFFER

LENNAR CAROLINAS, LLC
DB 16720, PG 1045
TRACT 3
"BOUNDARY SURVEY"
BM 2017, PG 379
PIN No. 0722229350

CONNECTION TO GREENWAY WITHIN SMITH FARM

LENNAR CAROLINAS, LLC
DB 16720, PG 1045
TRACT 3
"BOUNDARY SURVEY"
BM 2017, PG 379
PIN No. 0722229350

EXISTING WETLANDS

30' BUFFER SEE NOTE #7

SCM #1

THE PROPOSED LOCAL CONNECTIONS WILL COMPLY WITH THE TOWN OF APEX THOROUGHFARE PLAN. THE PROPOSED ROAD SECTION WILL BE 50' WIDTH RIGHT-OF-WAY.

THE PROPOSED LOCAL CONNECTIONS WILL COMPLY WITH THE TOWN OF APEX THOROUGHFARE PLAN. THE PROPOSED ROAD SECTION WILL BE 50' WIDTH RIGHT-OF-WAY.

FLOODWAY (OUT)
(IN)

FLOODWAY (OUT)
(IN)

LENNAR CAROLINAS, LLC
DB 16720, PG 1062
"RCA AREA"
SMITH FARM PUD, PH 1
BM 2018, PG 924
PIN No. 0722219077

20' TYPE A

LENNAR CAROLINAS, LLC
DB 16720, PG 1062
"RCA AREA"
SMITH FARM PUD, PH 1
BM 2018, PG 923
PIN No. 0722219077

ROWBOAT ROAD
50' R/W

WATER TOWER LANE
50' R/W

LENNAR CAROLINAS, LLC
DB 16720, PG 1062
"FUTURE REC SITE"
SMITH FARM PUD, PH 1
BM 2018, PG 922 & 923
PIN No. 0722303175

SMITH FARMS OF APEX HOMEOWNERS ASSOCIATION, INC.
DB 17177, PG 741
COMMON AREA 1
HALEY AT SMITH FARMS
BM 2018, PG 934
PIN No. 0721396648

SMITH FARMS OF APEX HOMEOWNERS ASSOCIATION, INC.
DB 17177, PG 741
COMMON AREA 3
HALEY AT SMITH FARMS
BM 2018, PG 934
PIN No. 0722309093

FARMHOUSE DRIVE
50' R/W

SMITH FARMS OF APEX HOMEOWNERS ASSOCIATION, INC.
DB 17177, PG 741
COMMON AREA 2
HALEY AT SMITH FARMS
BM 2018, PG 934
PIN NO. 0721397362

RILEYS
POND DRIVE
50' R/W

THASSOS DRIVE
50' R/W

LEGEND

- RESIDENTIAL
- STREAM
- STREAM BUFFER
- PERIMETER BUFFER
- STREETSCAPE
- EXISTING POND
- S.C.M.
- WETLAND
- ROADWAY CONNECTION
- GREENWAY CONNECTION

GRAPHIC SCALE
100 0 50 100 200
1 inch = 100 ft.

PRELIMINARY
NOT APPROVED FOR CONSTRUCTION

| No. | Revision | Date | By |
|---|---|---|---|
| | | | |

| | |
|---|---|
| Designer: WR | Scale: 1" = 100' |
| Drawn By: WR | Date: 02/26/2021 |
| Checked By: WR | Job No.: 02180517.20 |

# HACKNEY

APEX WAKE COUNTY NORTH CAROLINA

# CONCEPTUAL LAYOUT PLAN

WithersRavenel
Engineers | Planners | Surveyors
115 MacKenan Drive | Cary, NC 27511 | t: 919.469.3340 | license #: C-0832 | www.withersravenel.com

Sheet No. 2.0



K:\180\02180517.20\Hackney Tract\Apex\CAD\Drawing Set\PUD\2.0 CONCEPT LAYOUT PLAN.dwg Friday, February 26, 2021 10:31:12 AM - INGE_BRYANT

UTILITY NOTES:

1. WATER AND SANITARY SEWER WILL BE OWNED AND MAINTAINED BY THE TOWN OF APEX.
2. FIRE HYDRANTS, VALVES, SERVICES, METERS, AND APPURTENANCES SHALL BE DESIGNED PER THE TOWN OF APEX CONSTRUCTION SPECIFICATIONS AND SHALL BE SHOWN ON THE CONSTRUCTION PLANS.
3. ALL UTILITY EASEMENTS SHALL BE PROVIDED AS NECESSARY. DELINEATION WILL BE DETERMINED WITH FINAL DESIGN OF INTERNAL PUBLIC STREETS AT THE SUBDIVISION PLAN STAGE. MINIMUM UNDISTURBED BUFFER WIDTHS SHALL BE EXCLUSIVE OF UTILITY EASEMENTS UNLESS APPROVED BY THE DIRECTOR OF THE PUBLIC WORKS & UTILITIES DEPARTMENT.
4. THE DEVELOPER WILL ACTIVELY WORK WITH THE TOWN OF APEX TO PRESERVE EXISTING TREES ON SITE. THESE AREAS SHALL INCLUDE REQUIRED LANDSCAPE BUFFERS, RCA AREAS, NON-BUFFERED AND NON-RCA AREAS, AREAS OF PROPOSED UTILITY LINES, AND ADJACENT TO THE SUBJECT PROPERTY, TO THE MAXIMUM EXTENT POSSIBLE.
5. UTILITY LAYOUT FOR WATER AND SEWER IS CONCEPTUAL. FINAL DESIGN WILL BE DETERMINED AT THE SUBDIVISION PLAN STAGE.
6. IN NATURAL DRAINAGE WAYS, SEWER SHALL BE EXTENDED TO THE PROPERTY LINES TO READILY ENABLE FUTURE CONNECTIONS TO ADJOINING PROPERTY. SEWER DESIGN SHALL ACCOUNT FOR FUTURE UPSTREAM DEVELOPMENT BASED ON THE CURRENT LAND USE PLAN, AND SHALL INCLUDE EVALUATION OF EXISTING DOWNSTREAM SEWER CAPACITY.

APPROXIMATE LOCATION OF EXISTING TOWN OF APEX WATERLINE

HASSE AVE 60' R/W

CRESCENT APEX, LLC
DB 17044, PG 924
RCA 6
LINDEN SUBDIVISION
BM 2020, PG 1334
PIN No. 0722424038

CRESCENT APEX, LLC
DB 17044, PG 924 RCA 1
LINDEN SUBDIVISION
BM 2019, PG 1364 & 1366
PIN No. 0722512006

CRESCENT APEX, LLC
DB 17044, PG 924
RCA 1
LINDEN SUBDIVISION
BM 2019, PG 1364 & 1366
PIN No. 0722512006

CRESCENT APEX, LLC
DB 17044, PG 924
RCA 1
LINDEN SUBDIVISION
BM 2019, PG 1364 & 1366
PIN No. 0722512006

MICHAEL BASS
SHERRIE BASS
DB 14367, PG 1240
LOT 3
"WILLIAM E. GERRINGER"
BM 1982, PG 24
PIN No. 0722503445

ELIZABETH PERKINS
DB 14268, PG 331
LOT 1
"WILLIAM E. GERRINGER"
BM 1982, PG 24
PIN No. 0722503152

SEE UTILITY NOTE 6

50' BUFFER

EXISTING POND

SEWER LINE

WATER LINE

40' UTILITY AND PIPELINE EASEMENT DB 14343, PG 2028

EXISTING 1% ANNUAL FLOOD ZONE (ZONE AE)

OLIVE CHAPEL ROAD (SR 1160) VARIABLE WIDTH R/W

APPROXIMATE LOCATION OF EXISTING 12" TOWN OF APEX WATERLINE

EXISTING WETLANDS

50' BUFFER

C/L OF STREAM

EXISTING POND

APPROXIMATE 100' BUFFER

LENNAR CAROLINAS, LLC
DB 16720, PG 1045
TRACT 3
"BOUNDARY SURVEY"
BM 2017, PG 379
PIN No. 0722229350

PROPOSED CONNECTION TO EXISTING MANHOLE

LENNAR CAROLINAS, LLC
DB 16720, PG 1045
TRACT 3
"BOUNDARY SURVEY"
BM 2017, PG 379
PIN No. 0722229350

EXISTING WETLANDS

FLOODWAY (UD)

FLOODWAY (N)

LENNAR CAROLINAS, LLC
DB 16720, PG 1062
"RCA AREA"
SMITH FARM PUD, PH 1
BM 2018, PG 924
PIN No. 0722219077

LENNAR CAROLINAS, LLC
DB 16720, PG 1062
"RCA AREA"
SMITH FARM PUD, PH 1
BM 2018, PG 923
PIN No. 0722219077

LENNAR CAROLINAS, LLC
DB 16720, PG 1062
"FUTURE REC SITE"
SMITH FARM PUD, PH 1
BM 2018, PG 922 & 923
PIN No. 0722303175

WATER TOWER LANE 50' R/W

SMITH FARMS OF APEX HOMEOWNERS ASSOCIATION, INC.
DB 17177, PG 741
COMMON AREA 1
HALEY AT SMITH FARMS
BM 2018, PG 934
PIN No. 0721396648

ROWBOAT ROAD 50' R/W

SMITH FARMS OF APEX HOMEOWNERS ASSOCIATION, INC.
DB 17177, PG 741
COMMON AREA 3
HALEY AT SMITH FARMS
BM 2018, PG 934
PIN No. 0722309093

TOWN OF APEX ELECTRIC UTILITY EASEMENT PER DB 13318, PG 1911

FARMHOUSE DRIVE 50' R/W

SMITH FARMS OF APEX HOMEOWNERS ASSOCIATION, INC.
DB 17177, PG 741
COMMON AREA 2
HALEY AT SMITH FARMS
BM 2018, PG 934
PIN NO. 0721397362

RILEYS POND DRIVE 50' R/W

THASSOS DRIVE 50' R/W

GRAPHIC SCALE
100 0 50 100 200
1 inch = 100 ft.

PRELIMINARY
NOT APPROVED FOR CONSTRUCTION

| No. | Revision | Date | By |
|---|---|---|---|
| | | | |

| | |
|---|---|
| Designer: WR | Scale: 1" = 100' |
| Drawn By: WR | Date: 02/26/2021 |
| Checked By: WR | Job No.: 02180517.20 |

# HACKNEY

APEX WAKE COUNTY NORTH CAROLINA

# CONCEPTUAL UTILITY PLAN

WithersRavenel
Engineers | Planners | Surveyors
115 MacKenan Drive | Cary, NC 27511 | t: 919.469.3340 | license #: C-0832 | www.withersravenel.com

Sheet No. 3.0



K:\180\02180517.20\Hackney Tract\Apex\CADD\Drawing Sets\PUD\3.0 PRELIMINARY UTILITY PLAN.dwg- Friday, February 26, 2021 10:31:41 AM - INGE.BRYANT

STORMWATER MANAGEMENT NOTES:

1. TOPOGRAPHIC AND UTILITY INFORMATION BASED ON AVAILABLE GIS MAPPING. PRELIMINARY BOUNDARY SURVEY PREPARED BY WITHERSRAVENEL.
2. WETLAND/STREAM INFORMATION BASED ON EVALUATION BY S&EC DATED 09/18/20.
3. REGULATORY FEMA MAPPED FLOODPLAINS EXIST ON SITE PER FIRM MAP #3720072200J (5/2/06).
4. THE SUBJECT PROPERTY IS LOCATED WITHIN THE TOWN OF APEX PRIMARY WATERSHED PROTECTION OVERLAY DISTRICT.
5. STORMWATER MANAGEMENT FACILITIES SHALL BE DESIGNED PER THE TOWN OF APEX STANDARDS AND REGULATIONS FOR STORMWATER QUANTITY AND QUALITY (UDO SECTION 6.1.7 B).
6. ALL APPLICABLE LOCAL AND STATE ENVIRONMENTAL PERMITS SHALL BE OBTAINED PRIOR TO START OF CONSTRUCTION.
7. STORMWATER TREATMENT WILL BE HANDLED BY INDIVIDUAL OR REGIONAL FACILITIES WITHIN THE SUBJECT PROPERTY OR ADJACENT OFF-SITE DRAINAGE EASEMENT.
8. THE POST DEVELOPMENT PEAK FLOW RATE OF ON-SITE STORMWATER WILL NOT EXCEED THE PRE-DEVELOPMENT PEAK FLOW RATE IN ACCORDANCE WITH THE UDO.

CRESCENT APEX, LLC
DB 17044, PG 924
RCA 1
LINDEN SUBDIVISION
BM 2019, PG 1364 & 1366
PIN No. 0722512006

MICHAEL BASS
SHERRIE BASS
DB 14367, PG 1240
LOT 3
"WILLIAM E. GERRINGER"
BM 1982, PG 24
PIN No. 0722503445

ELIZABETH PERKINS
DB 14268, PG 331
LOT 1
"WILLIAM E. GERRINGER"
BM 1982, PG 24
PIN No. 0722503152

HASSE AVE
60' R/W

CRESCENT APEX, LLC
DB 17044, PG 924 RCA 1
LINDEN SUBDIVISION
BM 2019, PG 1364 & 1366
PIN No. 0722512006

CRESCENT APEX, LLC
DB 17044, PG 924
RCA 6
LINDEN SUBDIVISION
BM 2020, PG 1334
PIN No. 0722424038

CRESCENT APEX, LLC
DB 17044, PG 924
RCA 1
LINDEN SUBDIVISION
BM 2019, PG 1364 & 1366
PIN No. 0722512006

EXISTING POND

50' BUFFER

40' UTILITY AND
PIPELINE EASEMENT
DB 14343, PG 2028

SCM #2

EXISTING 1% ANNUAL
FLOOD ZONE
(ZONE AE)

OLIVE CHAPEL ROAD
(SR 1160)
VARIABLE WIDTH R/W

EXISTING
WETLANDS

50' BUFFER

C/L OF STREAM

SCM #3

EXISTING POND

APPROXIMATE
100' BUFFER

LENNAR CAROLINAS, LLC
DB 16720, PG 1045
TRACT 3
"BOUNDARY SURVEY"
BM 2017, PG 379
PIN No. 0722229350

EXISTING
WETLANDS

LENNAR CAROLINAS, LLC
DB 16720, PG 1045
TRACT 3
"BOUNDARY SURVEY"
BM 2017, PG 379
PIN No. 0722229350

RILEYS
POND DRIVE
50' R/W

SCM #1

FLOODWAY (OUT)
(N)

FLOODWAY (OUT)
(N)

LENNAR CAROLINAS, LLC
DB 16720, PG 1062
"RCA AREA"
SMITH FARM PUD, PH 1
BM 2018, PG 924
PIN No. 0722219077

ROWBOAT ROAD
50' R/W

LENNAR CAROLINAS, LLC
DB 16720, PG 1062
"RCA AREA"
SMITH FARM PUD, PH 1
BM 2018, PG 923
PIN No. 0722219077

WATER
TOWER LANE
50' R/W

LENNAR CAROLINAS, LLC
DB 16720, PG 1062
"FUTURE REC SITE"
SMITH FARM PUD, PH 1
BM 2018, PG 922 & 923
PIN No. 0722303175

SMITH FARMS OF APEX HOMEOWNERS
ASSOCIATION, INC.
DB 17177, PG 741
COMMON AREA 1
HALEY AT SMITH FARMS
BM 2018, PG 934
PIN No. 0721396648

SMITH FARMS OF APEX
HOMEOWNERS
ASSOCIATION, INC.
DB 17177, PG 741
COMMON AREA 3
HALEY AT SMITH FARMS
BM 2018, PG 934
PIN No. 0722309093

FARMHOUSE DRIVE
50' R/W

SMITH FARMS OF APEX
HOMEOWNERS
ASSOCIATION, INC.
DB 17177, PG 741
COMMON AREA 2
HALEY AT SMITH FARMS
BM 2018, PG 934
PIN NO. 0721397362

THASSOS DRIVE
50' R/W

GRAPHIC SCALE
100 0 50 100 200
1 inch = 100 ft.

PRELIMINARY
NOT APPROVED FOR
CONSTRUCTION

| No. | Revision | Date | By |
|---|---|---|---|
| | | | |

| | |
|---|---|
| Designer: WR | Scale: 1" = 100' |
| Drawn By: WR | Date: 02/26/2021 |
| Checked By: WR | Job No.: 02180517.20 |

# HACKNEY

APEX WAKE COUNTY NORTH CAROLINA

# CONCEPTUAL STORMWATER MANAGEMENT PLAN

WithersRavenel
Engineers | Planners | Surveyors
115 MacKenan Drive | Cary, NC 27511 | t: 919.469.3340 | license #: C-0832 | www.withersravenel.com

Sheet No. 4.0



K:\180\02180517.20\Hackney Tract\Apex\CAD\Drawing Sheet\Plan\04.0 STORMWATER MANAGEMENT PLAN.dwg Friday, February 26, 2021 10:32:15 AM JNGE, BRYANT

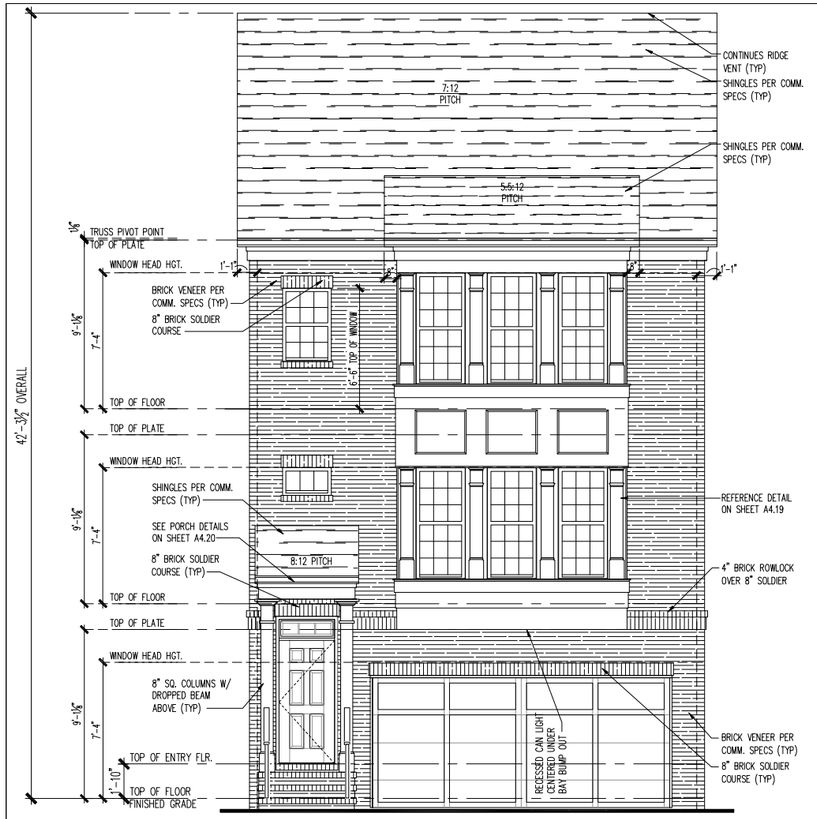


## ELEVATION 64

SCALE: 1/4" = 1'-0"

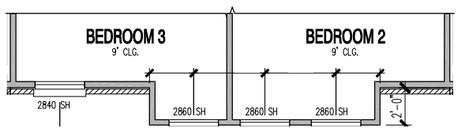


## THIRD FLOOR PLAN

SCALE: 1/4" = 1'-0"

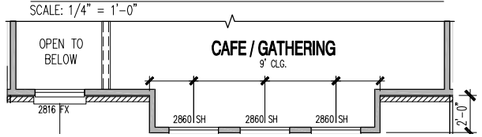


## SECOND FLOOR PLAN

SCALE: 1/4" = 1'-0"

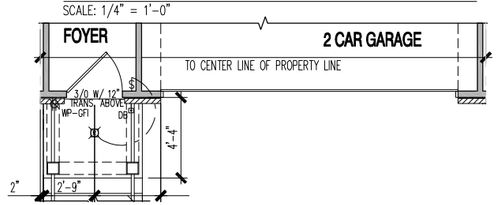


## FIRST FLOOR PLAN

SCALE: 1/4" = 1'-0"

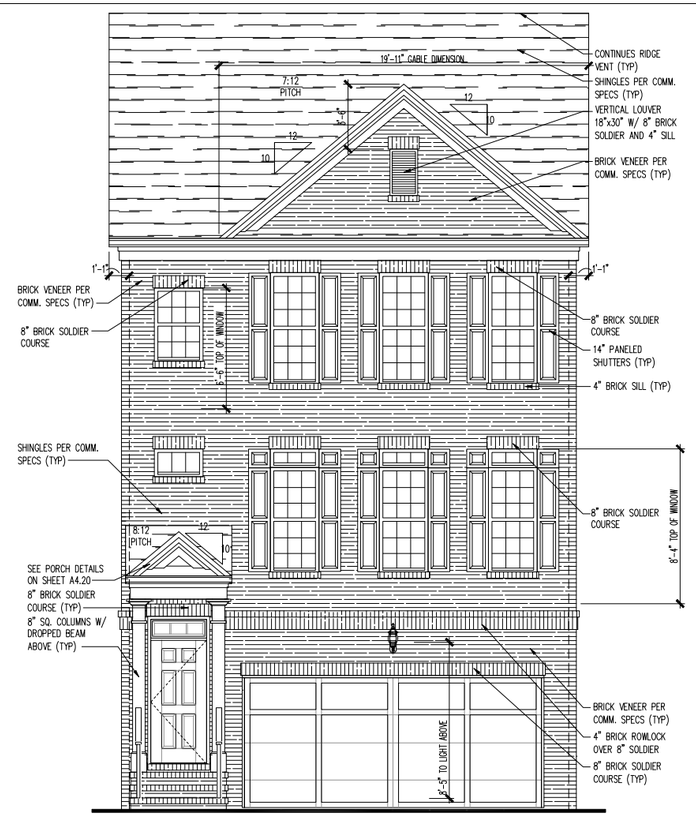


## ELEVATION 65

SCALE: 1/4" = 1'-0"

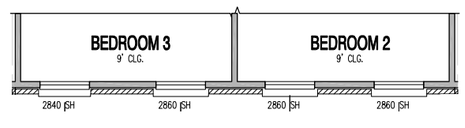


## THIRD FLOOR PLAN

SCALE: 1/4" = 1'-0"

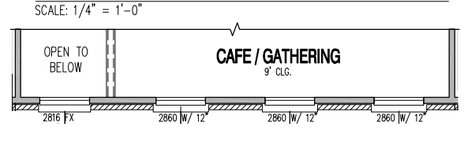


## SECOND FLOOR PLAN

SCALE: 1/4" = 1'-0"

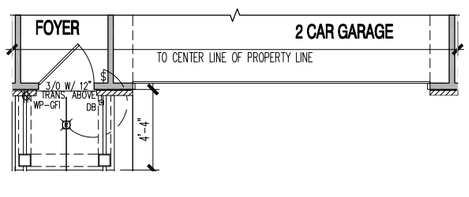


## FIRST FLOOR PLAN

SCALE: 1/4" = 1'-0"

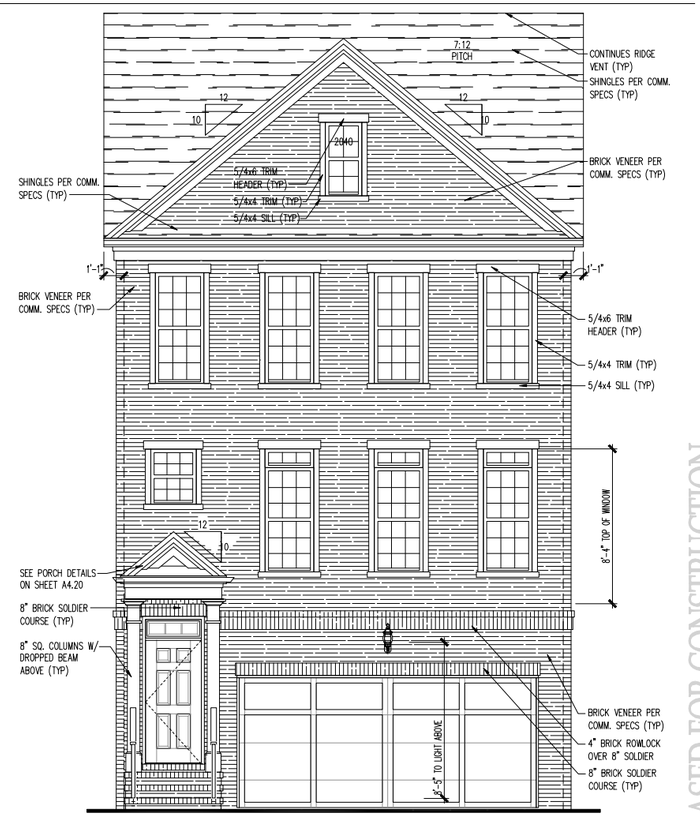


## ELEVATION 66

SCALE: 1/4" = 1'-0"

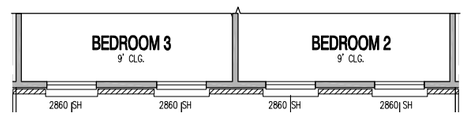


## THIRD FLOOR PLAN

SCALE: 1/4" = 1'-0"

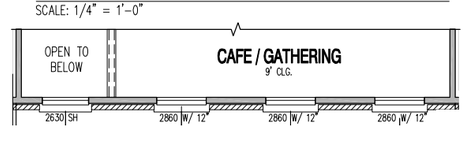


## SECOND FLOOR PLAN

SCALE: 1/4" = 1'-0"

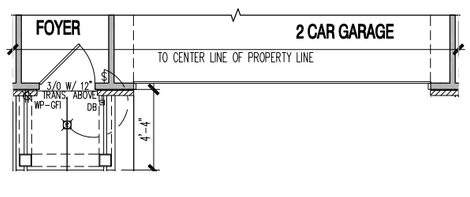


## FIRST FLOOR PLAN

SCALE: 1/4" = 1'-0"



Elevations are for illustrative purposes only; elevations submitted at MSP will be consistent with the architectural standards included in the PUD.

(c) Copyright Pulte Home Corporation - 2017

Southeast Zone
2475 Northwinds Pkwy. Suite 600
Alpharetta, GA 30009 (770) 381-3450

Pulte Homes

Building Elevations & Floor Plan Partials
Units 64, 65 & 66

PRODUCTION MANAGER
Dan Kostka
INITIAL RELEASE DATE:
12-08-2015
CURRENT RELEASE DATE:
12-08-2015

| REV # | DATE / DESCRIPTION |
|---|---|
| 1 | |
| 2 | |
| 3 | |
| 4 | |
| 5 | |
| 6 | |
| 7 | |
| 8 | |
| 9 | |
| 10 | |

GARAGE HANDING
FL-GE-ME-KC-KR

PLAN NAME
Summerford & Hutton
NPC PLAN NUMBER
2468.928 - 2468.929
LAWSON PLAN ID
—

SHEET
A.3.27

RELEASED FOR CONSTRUCTION

NOTE: SCALES NOTED ON DRAWINGS RELATE TO FULL SIZE PLOTS ON 22x34 SHEETS - 11x17 SHEETS REPRESENT 1/2 SCALE PLOTS

PLOTTED: April 17, 2017 / Samantha Powell / 24-FL-ELEVS.DWG

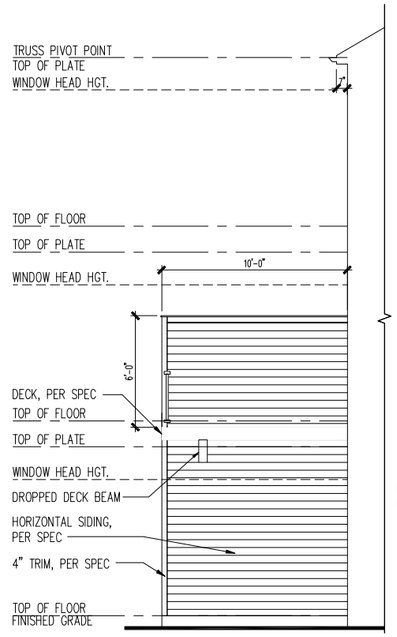


## LEFT ELEVATION - DECK 3 OPTION - MIDDLE CONDITION

SCALE: 3/16" = 1'-0"  SEE BUILDING CONTROL PLANS FOR MORE INFORMATION

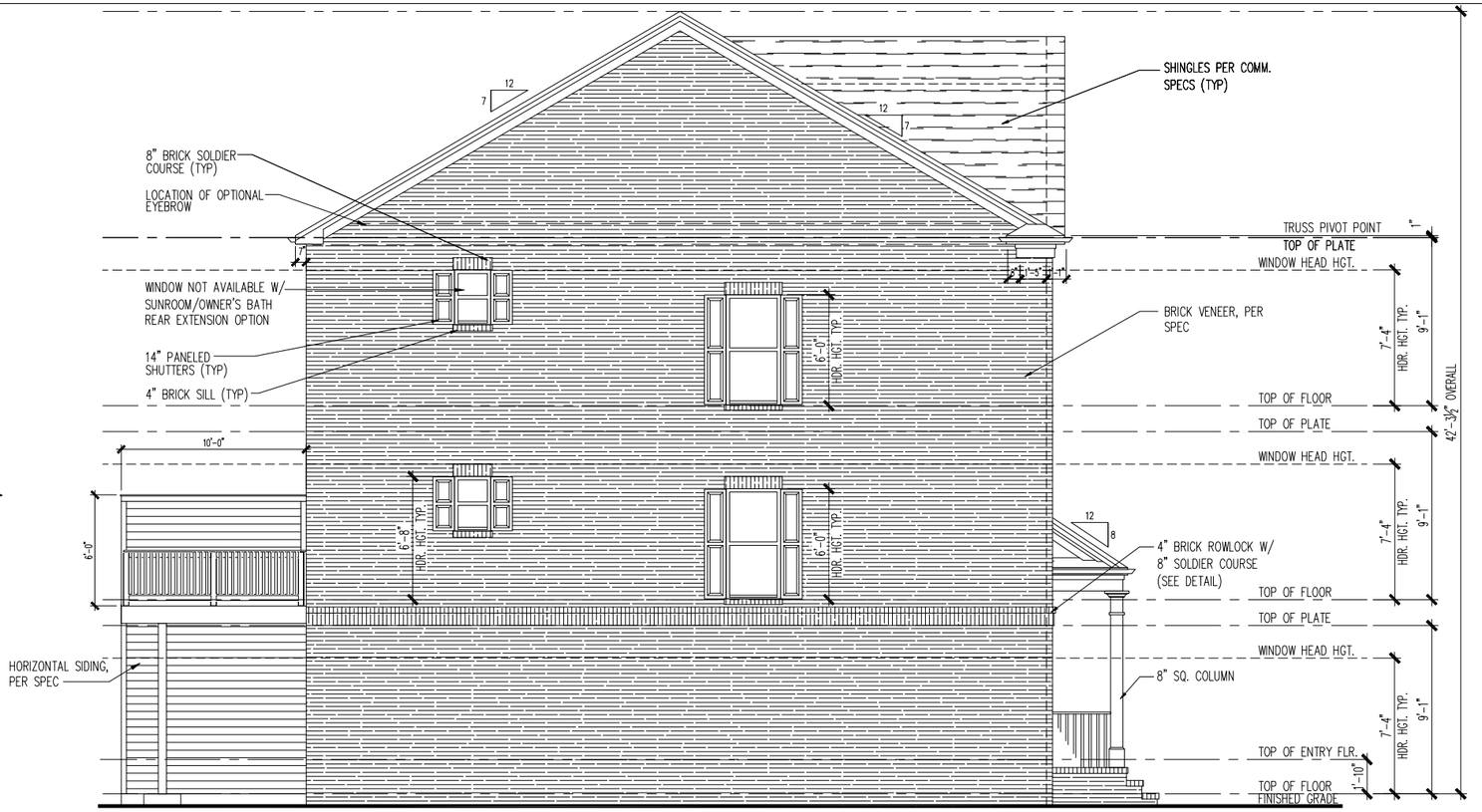


## LEFT ELEVATION "61- 70"

SCALE: 3/16" = 1'-0"

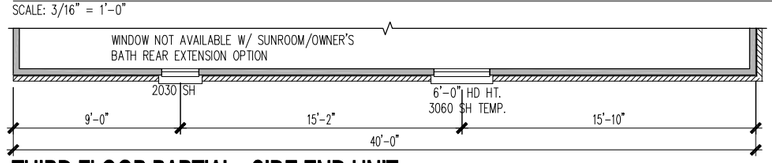


## THIRD FLOOR PARTIAL - SIDE END UNIT

SCALE: 3/16" = 1'-0"

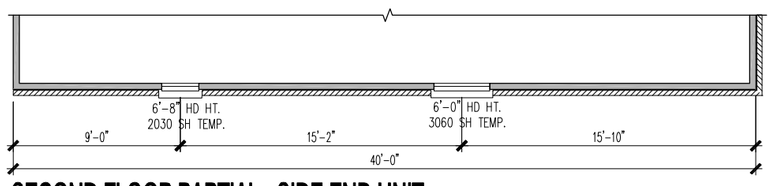


## SECOND FLOOR PARTIAL - SIDE END UNIT

SCALE: 3/16" = 1'-0"

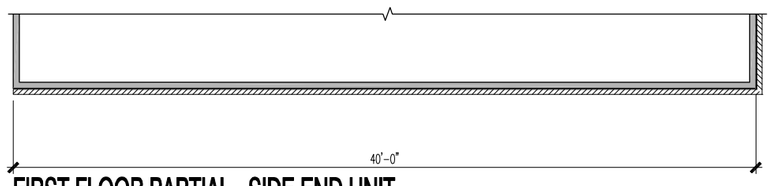


## FIRST FLOOR PARTIAL - SIDE END UNIT

SCALE: 3/16" = 1'-0"



Elevations are for illustrative purposes only; elevations submitted at MSP will be consistent with the architectural standards included in the PUD.

(c) Copyright Pulte Home Corporation - 2017

Southeast Zone
2475 Northwinds Pkwy. Suite 600
Alpharetta, GA 30009 (770) 381-3450

Pulte Homes

RELEASED FOR CONSTRUCTION

Left Elevations 61-70 & Floor Plan Partials

PRODUCTION MANAGER
Dan Kostka
INITIAL RELEASE DATE:
12-08-2015
CURRENT RELEASE DATE:
12-08-2015

| REV # | DATE / DESCRIPTION |
|---|---|
| 1 | |
| 2 | |
| 3 | |
| 4 | |
| 5 | |
| 6 | |
| 7 | |
| 8 | |
| 9 | |
| 10 | |

GARAGE HANDING
FL-GF-ME-KC-KR

PLAN NAME
Summerford & Hutton

NPC PLAN NUMBER
2468.928 - 2468.929

LAWSON PLAN ID

SHEET
A.3.30S

NOTE: SCALES NOTED ON DRAWINGS RELATE TO FULL SIZE PLOTS ON 22x34 SHEETS - 11x17 SHEETS REPRESENT 1/2 SCALE PLOTS

PLOTTED: April 17, 2017 / Samantha Powell / 24-FL-ELEVS.DWG

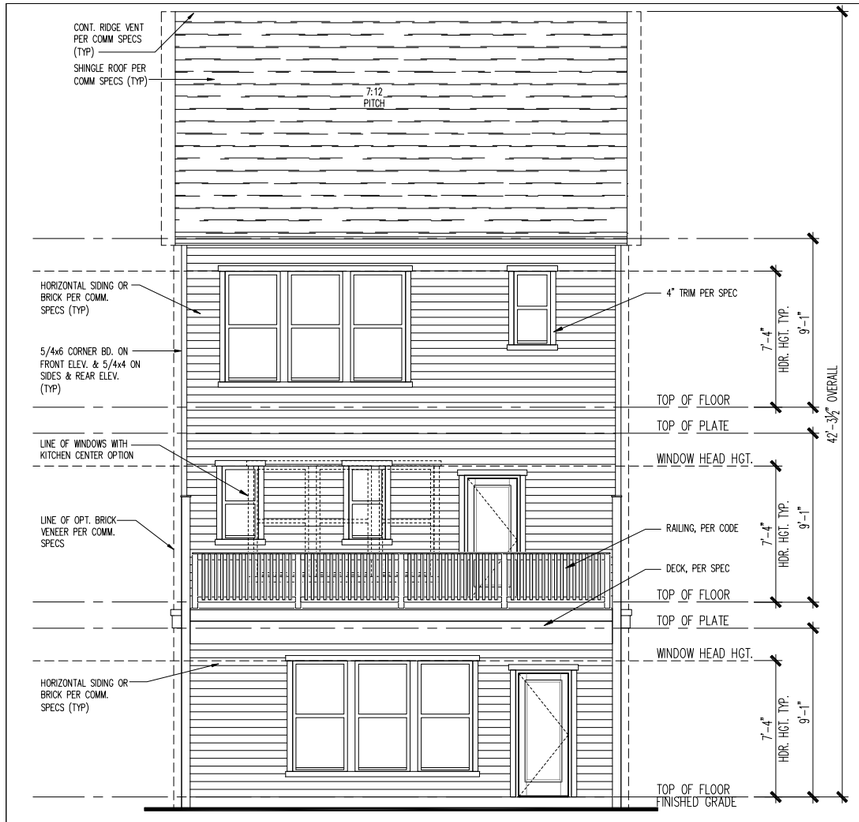


## REAR ELEVATION

SCALE: 1/4" = 1'-0"

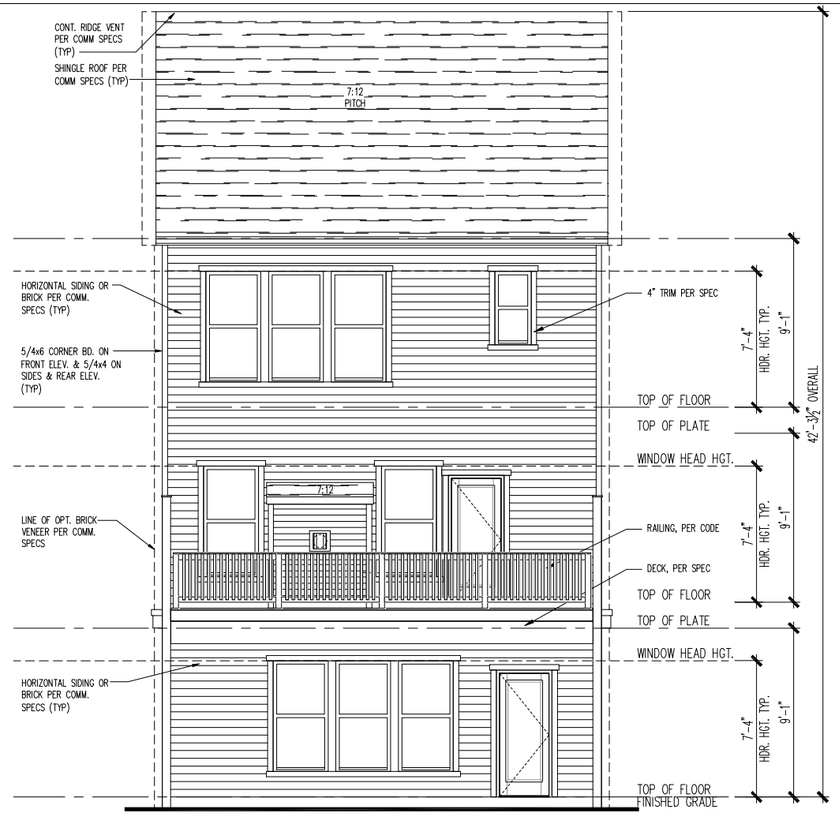


## REAR ELEVATION - FIREPLACE OPTION w/ DECK 3

SCALE: 1/4" = 1'-0"

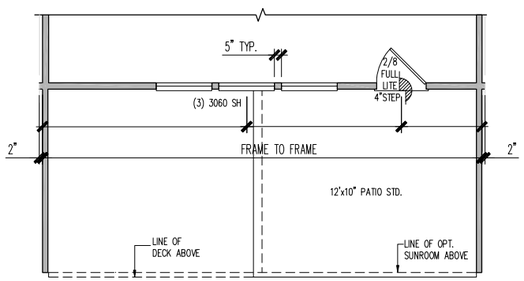


## FIRST FLOOR PLAN

SCALE: 1/4" = 1'-0"

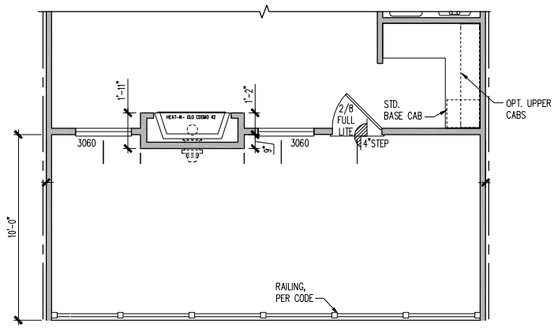


## FIREPLACE OPTION AT GATHERING ROOM w/ DECK 3

SCALE: 1/4" = 1'-0"

SEE BASE PLANS FOR INFORMATION NOT SHOWN



Elevations are for illustrative purposes only; elevations submitted at MSP will be consistent with the architectural standards included in the PUD.

(c) Copyright Pulte Home Corporation - 2017

Southeast Zone
2475 Northwinds Pkwy. Suite 600
Alpharetta, GA 30009 (770) 381-3450

Pulte Homes

RELEASED FOR CONSTRUCTION

Rear Elevations

PRODUCTION MANAGER
Dan Kostka
INITIAL RELEASE DATE:
12-08-2015
CURRENT RELEASE DATE:
12-08-2015

| REV # | DATE / DESCRIPTION |
|---|---|
| △ | |
| △ | |
| △ | |
| △ | |
| △ | |
| △ | |
| △ | |
| △ | |
| △ | |

GARAGE HANDING
FL-GE-ME-KC-KR

PLAN NAME
Summerford & Hutton
NPC PLAN NUMBER
2468.928 - 2468.929
LAWSON PLAN ID

SHEET
A.3.60

NOTE: SCALES NOTED ON DRAWINGS RELATE TO FULL SIZE PLOTS ON 22x34 SHEETS - 11x17 SHEETS REPRESENT 1/2 SCALE PLOTS

PLOTTED: April 17, 2017 / Samantha Powell / 24-FL-ELEVS.DWG

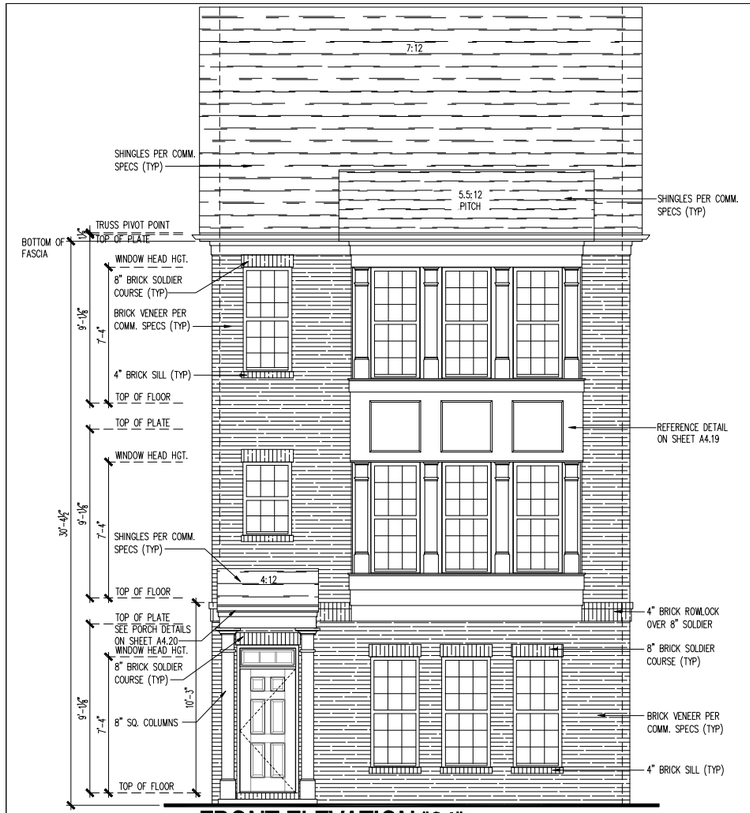


## FRONT ELEVATION "64"

SCALE : 1/4" = 1'-0"

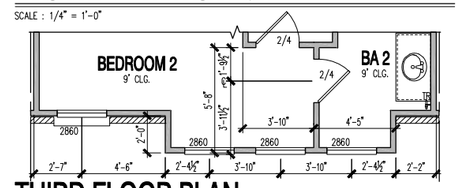


## THIRD FLOOR PLAN

SCALE : 1/4" = 1'-0"

*NOTE NEW BATH 2 DOOR LOCATION WITH THIS ELEVATION




## SECOND FLOOR PLAN

SCALE : 1/4" = 1'-0"

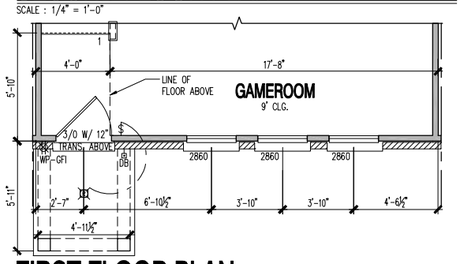


## FIRST FLOOR PLAN

SCALE : 1/4" = 1'-0"

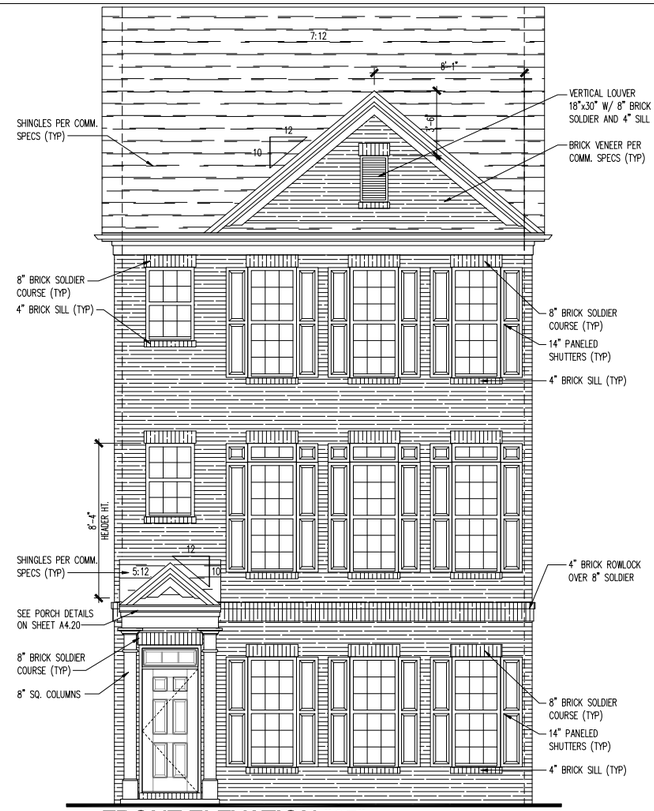


## FRONT ELEVATION "65"

SCALE : 1/4" = 1'-0"

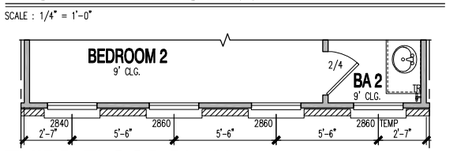


## THIRD FLOOR PLAN

SCALE : 1/4" = 1'-0"

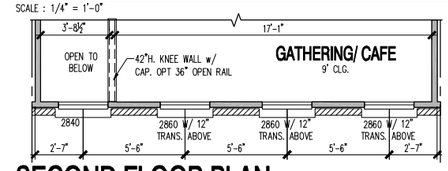


## SECOND FLOOR PLAN

SCALE : 1/4" = 1'-0"

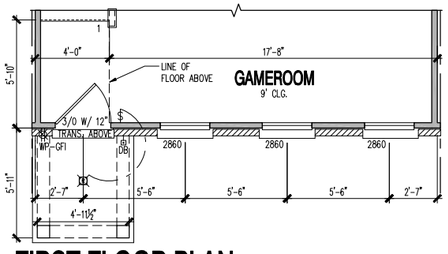


## FIRST FLOOR PLAN

SCALE : 1/4" = 1'-0"

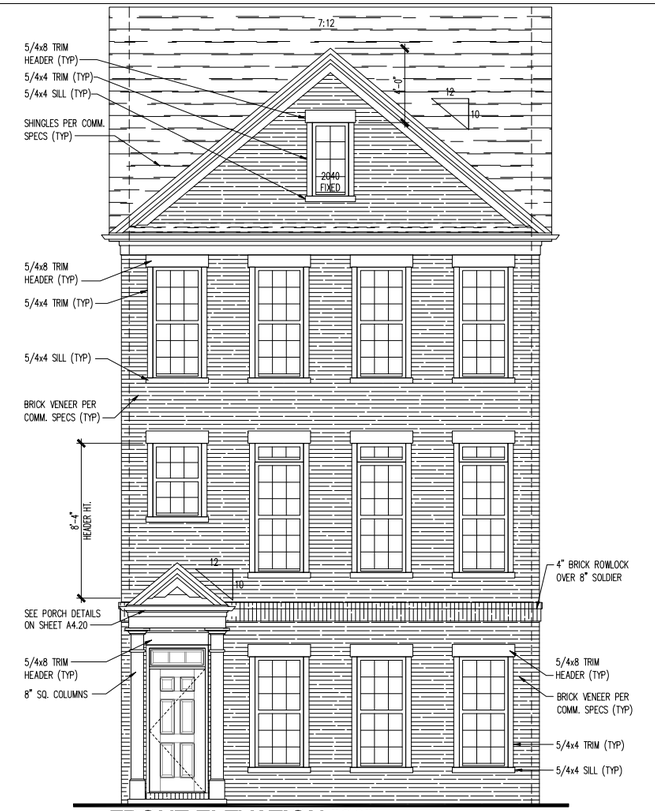


## FRONT ELEVATION "66"

SCALE : 1/4" = 1'-0"

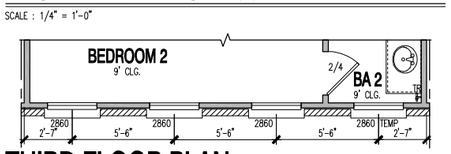


## THIRD FLOOR PLAN

SCALE : 1/4" = 1'-0"

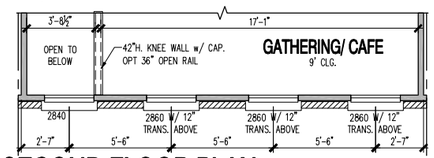


## SECOND FLOOR PLAN

SCALE : 1/4" = 1'-0"

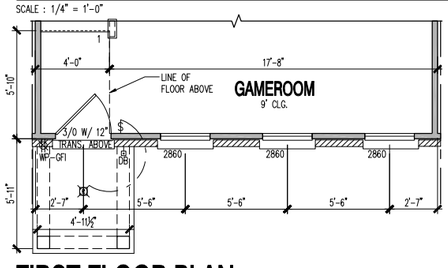


## FIRST FLOOR PLAN

SCALE : 1/4" = 1'-0"

(c) Copyright Pulte Home Corporation - 2017

Southeast Zone
2475 Northwinds Pkwy. Suite 600
Alpharetta, GA 30009 (770) 381-3450

Pulte Homes

Building Elevations 64 - 66
& Floor Plan Partials

PRODUCTION MANAGER
Dan Kostka
INITIAL RELEASE DATE:
12-08-2015
CURRENT RELEASE DATE:
1-29-2016

| REV # | DATE / DESCRIPTION |
|---|---|
| 1 | |
| 2 | |
| 3 | |
| 4 | |
| 5 | |
| 6 | |
| 7 | |
| 8 | |
| 9 | |
| 10 | |

GARAGE HANDING
RL-ME-KC-KR

PLAN NAME
Hayward / Briarcliff

NPC PLAN NUMBER
2466.237 - 2466.238

LAWSON PLAN ID

SHEET
A.3.15

NOTE: SCALES NOTED ON DRAWINGS RELATE TO FULL SIZE PLOTS ON 22x34 SHEETS - 11x17 SHEETS REPRESENT 1/2 SCALE PLOTS

PLOTTED: February 24, 2017 / Samantha Powell / 22-RL-ELEVS_TRADITIONAL.DWG



Elevations are for illustrative purposes only; elevations submitted at MSP will be consistent with the architectural standards included in the PUD.

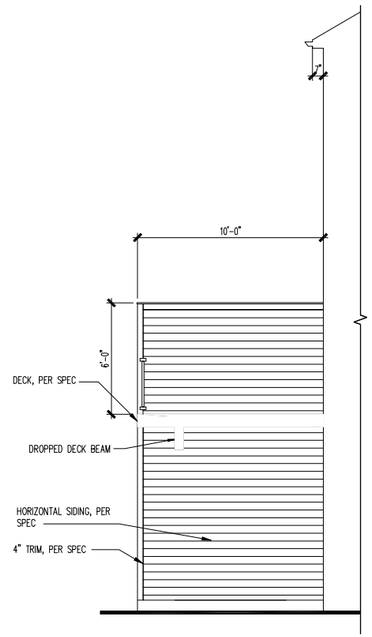


## REAR DECK MIDDLE CONDITION

SCALE : 1/4" = 1'-0"

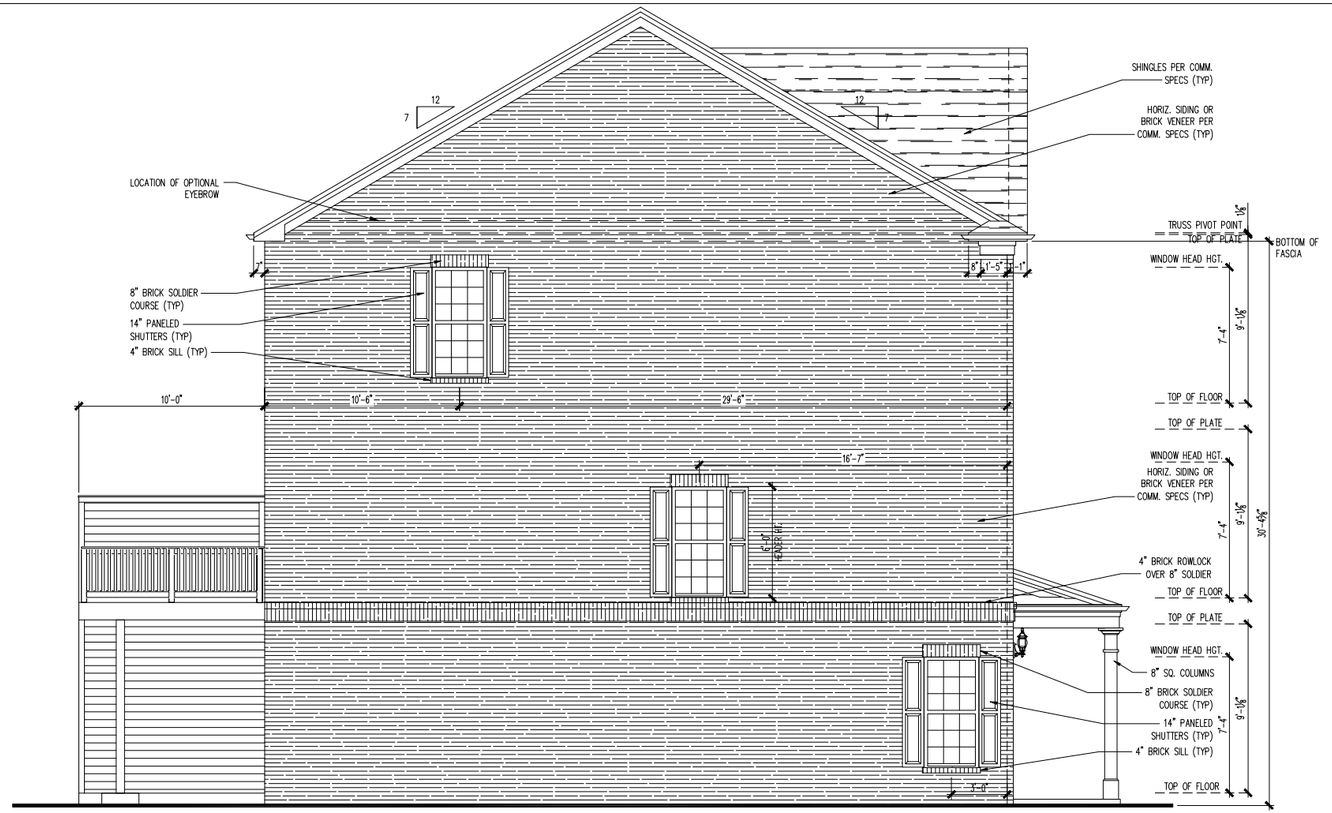


## LEFT ELEVATION "61-70"

SCALE : 1/4" = 1'-0"

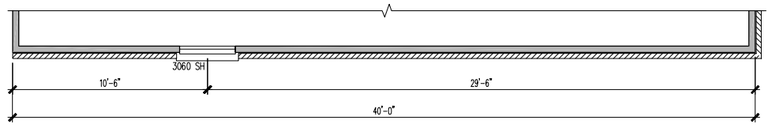


## THIRD FLOOR PARTIAL - SIDE END UNIT

SCALE: 1/4" = 1'-0"

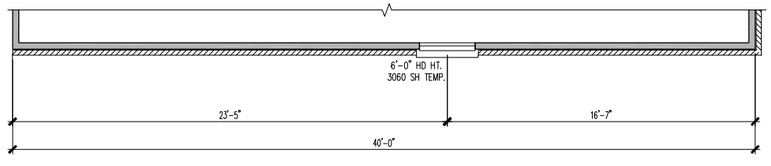


## SECOND FLOOR PARTIAL - SIDE END UNIT

SCALE: 1/4" = 1'-0"

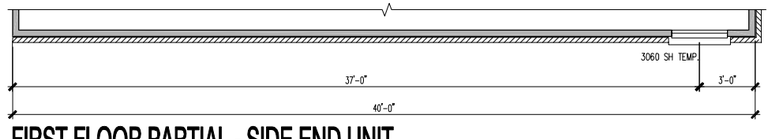


## FIRST FLOOR PARTIAL - SIDE END UNIT

SCALE: 1/4" = 1'-0"



Elevations are for illustrative purposes only; elevations submitted at MSP will be consistent with the architectural standards included in the PUD.

(c) Copyright Pulte Home Corporation - 2017

Southeast Zone
2475 Northwinds Pkwy. Suite 600
Alpharetta, GA 30009 (770) 381-3450

Pulte Homes

Left Elevations 61-70

PRODUCTION MANAGER
Dan Kostka
INITIAL RELEASE DATE:
12-08-2015
CURRENT RELEASE DATE:
1-29-2016

| REV # | DATE / DESCRIPTION |
|---|---|
| 1 | . |
| 2 | . |
| 3 | . |
| 4 | . |
| 5 | . |
| 6 | . |
| 7 | . |
| 8 | . |
| 9 | . |
| 10 | . |

GARAGE HANDING
RL-ME-KC-KR

PLAN NAME
Hayward / Briarcliff

NPC PLAN NUMBER
2466.237 - 2466.238

LAWSON PLAN ID
—

SHEET
A.3.19

NOTE: SCALES NOTED ON DRAWINGS RELATE TO FULL SIZE PLOTS ON 22x34 SHEETS - 11x17 SHEETS REPRESENT 1/2 SCALE PLOTS

PLOTTED: February 24, 2017 / Samantha Powell / 22-RL-ELEVS_TRADITIONAL.DWG

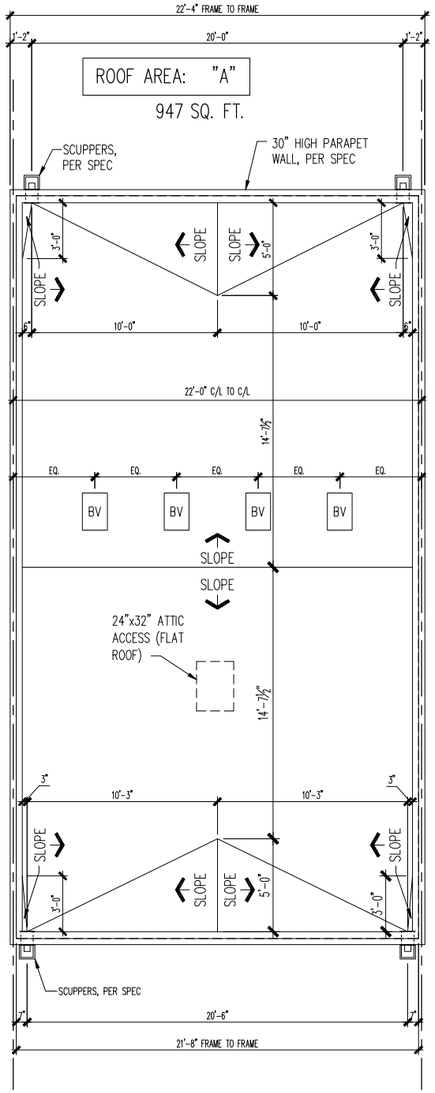


## ROOF PLAN

SCALE: 1/4" = 1'-0"

**ATTIC VENTILATION :** (300 SQ FT ATTIC SPACE / 1 SQ FT VENTILATION)
W/ 40%-50% REQ. VENTS GREATER THAN OR EQUAL TO 3' ABOVE EAVE / CORNICE VENTS PER IRC R806.2

ELEVATION "2" 866 SQ FT UNDER ROOF ATTIC /
300 SQ FT / 1 SQ FT = 2.89 SQ FT VENTILATION

RIDGE VENT 18 SQ IN = (.125 SQ FT)
BOX VENT 50 SQ IN = (.3472 SQ FT)
SOFFIT VENT 9 SQ IN = (.0625 SQ FT)

2.89 SQ FT x 50 % = 1.443SQ FT RIDGE, 2.89 SQ FT x 50 % = 1.443 SQ FT SOFFIT

| RIDGE VENT | OR W/ HIP, BOX VENT |
|---|---|
| 1.443 SQ FT = 11.5 FEET OF RIDGE VENT | 1.443 SQ FT = 4.2 BOX VENT(S) |
| 0.125 SQ FT | 0.3472SQ FT |
| SOFFIT VENT | |
| 1.443 SQ FT = 23.1 FEET OF SOFFIT VENT | |
| 0.0625SQ FT | |

*CALCULATIONS REFLECT 50 % RIDGE AND 50 % SOFFIT VENTS ALLOWABLE PER SECTION IRC R806.2

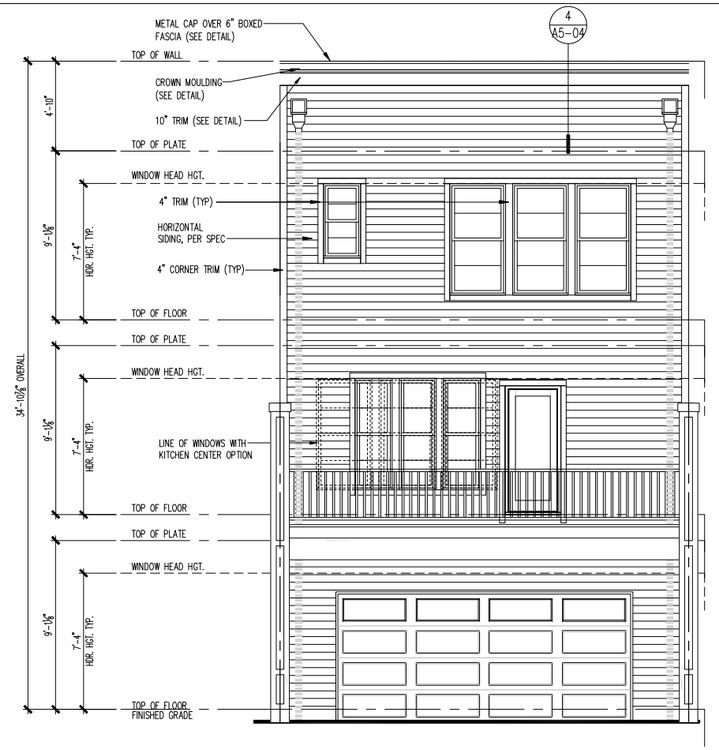


## REAR ELEVATION

SCALE: 1/4" = 1'-0"

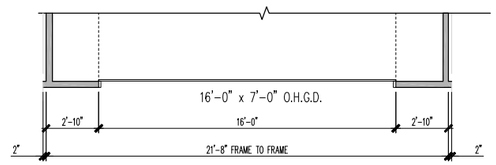


## FIRST FLOOR PLAN

SCALE: 1/4" = 1'-0"

(c) Copyright Pulte Home Corporation - 2017

Southeast Zone
2475 Northwinds Pkwy. Suite 600
Alpharetta, GA 30009 (770) 381-3450

Pulte Homes

Rear Elevation 21-25 & Roof Plan

PRODUCTION MANAGER
Dan Kostka
INITIAL RELEASE DATE:
12-08-2015
CURRENT RELEASE DATE:
1-29-2016

| REV # | DATE / DESCRIPTION |
|---|---|
| 1 | |
| 2 | |
| 3 | |
| 4 | |
| 5 | |
| 6 | |
| 7 | |
| 8 | |
| 9 | |

GARAGE HANDING
RL-MB-KC-KR

PLAN NAME
Hayward/ Briarcliff
NPC PLAN NUMBER
2466.237 - 2466.238
LAWSON PLAN ID

SHEET
A.3.20

NOTE: SCALES NOTED ON DRAWINGS RELATE TO FULL SIZE PLOTS ON 22x34 SHEETS -- 11x17 SHEETS REPRESENT 1/2 SCALE PLOTS

PLOTTED: February 24, 2017 / Samantha Powell / 22-RL-ELEVS_URBANJOWG



Elevations are for illustrative purposes only; elevations submitted at MSP will be consistent with the architectural standards included in the PUD.

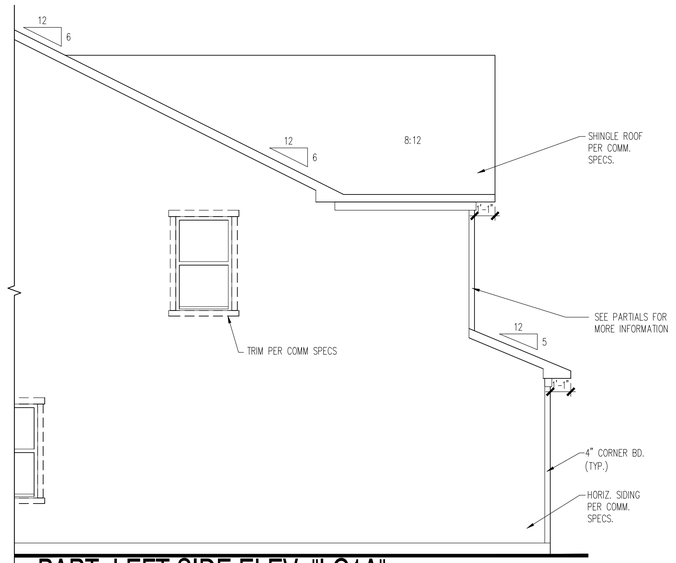


## PART. LEFT SIDE ELEV. "LC1A"

SCALE : 1/4" = 1'-0"




## FRONT ELEVATION "LC1A" FRONT ENTRY GARAGE

SCALE : 1/4" = 1'-0"

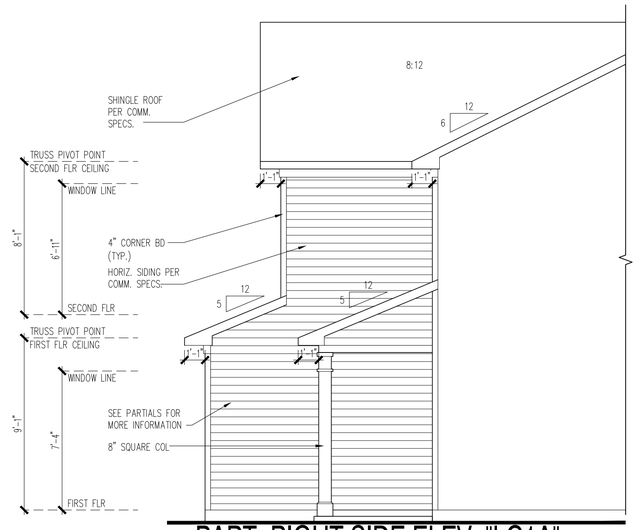


## PART. RIGHT SIDE ELEV. "LC1A"

SCALE : 1/4" = 1'-0"

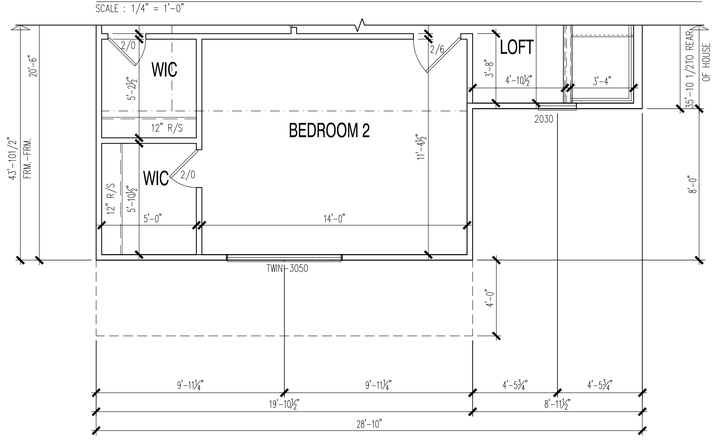


## PARTIAL SECOND FLOOR PLAN

SCALE : 1/4" = 1'-0"

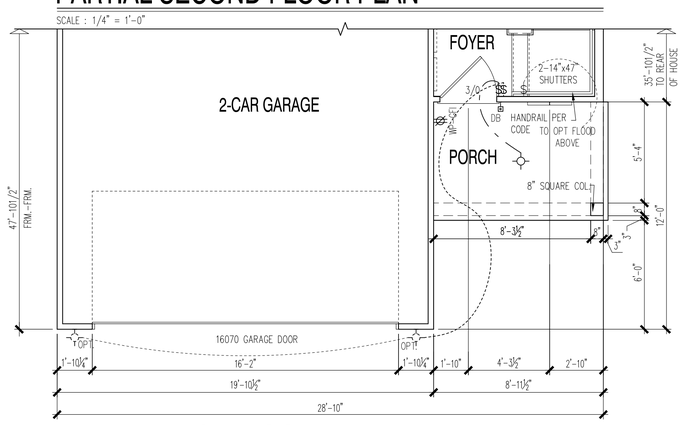


## PARTIAL FIRST FLOOR PLAN

SCALE : 1/4" = 1'-0"

NOTE:
ADD 1X4 WINDBORNE DEBRIS TRIM AROUND ALL WINDOWS PER COMM SPEC

Elevations are for illustrative purposes only; elevations submitted at MSP will be consistent with the architectural standards included in the PUD.

©COPYRIGHT: 2019 PB

Southeast Zone
2475 Northwinds Pkwy, Suite 600
Alpharetta, GA 30009 (770) 381-3450

PulteGroup

The HARRIS
FRONT ELEVATION "LC1A"
FRONT ENTRY GARAGE

| PRODUCT MANAGER | |
|---|---|
| INITIAL RELEASE DATE: | 00/00/0000 |

| REV# | DATE/DESCRIPTION |
|---|---|
| 1 | ---- ---- |
| 2 | ---- ---- |
| 3 | ---- ---- |
| 4 | ---- ---- |
| 5 | ---- ---- |
| 6 | ---- ---- |
| 7 | ---- ---- |
| 8 | ---- ---- |
| 9 | ---- ---- |
| 10 | ---- ---- |

PROJECT TYPE: Single Family
SPECIFICATION LEVEL: Pulte
PLAN NAME: Harris
NPC NUMBER: 8126.200
SHEET: 3.10

PLOTTED: November 18, 2019 / tmcdowell / 3.10 FRONT ELEVATION LC1A.dwg

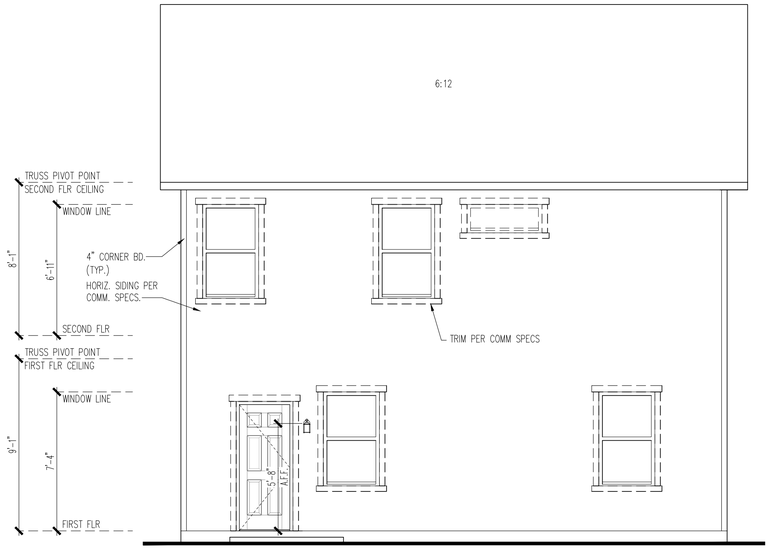


# REAR ELEVATION "LC2A" FRONT ENTRY GARAGE

SCALE : 1/4" = 1'-0"

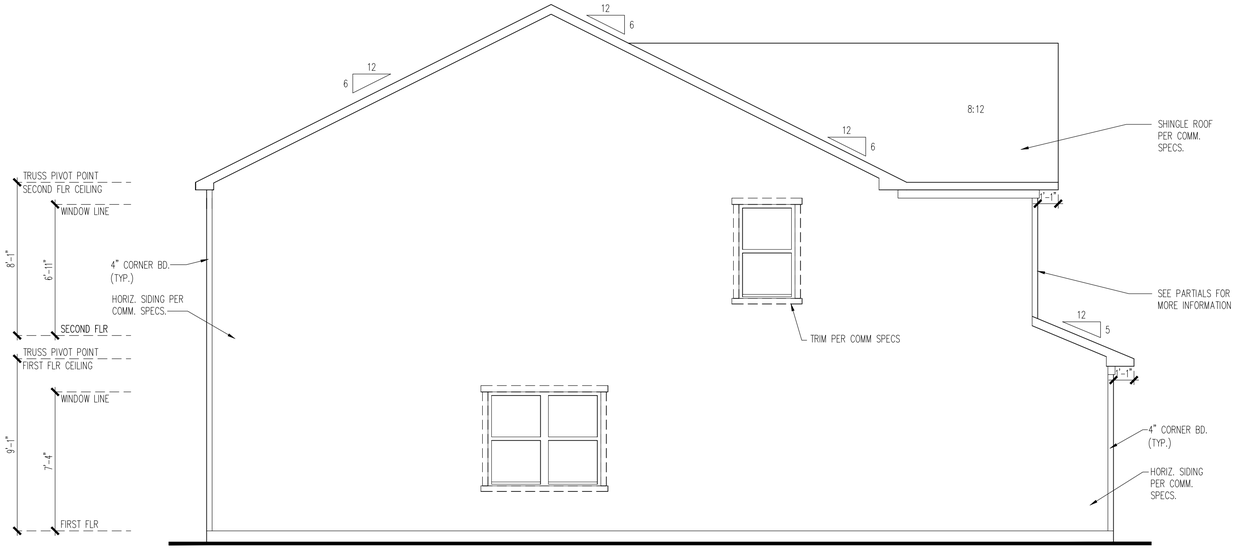


# LEFT SIDE ELEVATION "LC2A" FRONT ENTRY GARAGE

SCALE : 1/4" = 1'-0"

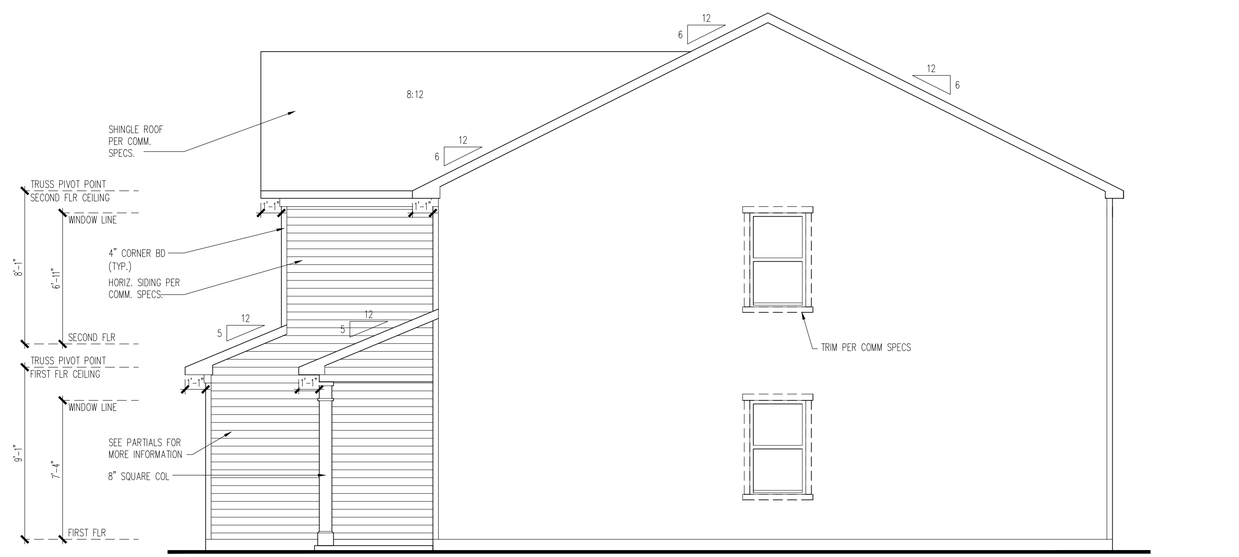


# RIGHT SIDE ELEVATION "LC2A" FRONT ENTRY GARAGE

SCALE : 1/4" = 1'-0"

©COPYRIGHT: 2019 PB

Southeast Zone
2475 Northwinds Pkwy, Suite 600
Alpharetta, GA 30009 (770) 381-3450

PulteGroup

The HARRIS
SIDE AND REAR ELEVATION "LC2A"
FRONT ENTRY GARAGE

PRODUCT MANAGER
---

INITIAL RELEASE
DATE: 00/00/0000

| REV# | DATE/DESCRIPTION |
|---|---|
| 1 | --- |
| 2 | --- |
| 3 | --- |
| 4 | --- |
| 5 | --- |
| 6 | --- |
| 7 | --- |
| 8 | --- |
| 9 | --- |
| 10 | --- |

PROJECT TYPE
Single Family

SPECIFICATION LEVEL
Pulte

PLAN NAME
Harris

NPC NUMBER
8126.200

SHEET
3.SR.3

PLOTTED: November 18, 2019 / Kiki / 3.SR.3 SIDE AND REAR ELEVATIONS LC2A.dwg



Elevations are for illustrative purposes only; elevations submitted at MSP will be consistent with the architectural standards included in the PUD.

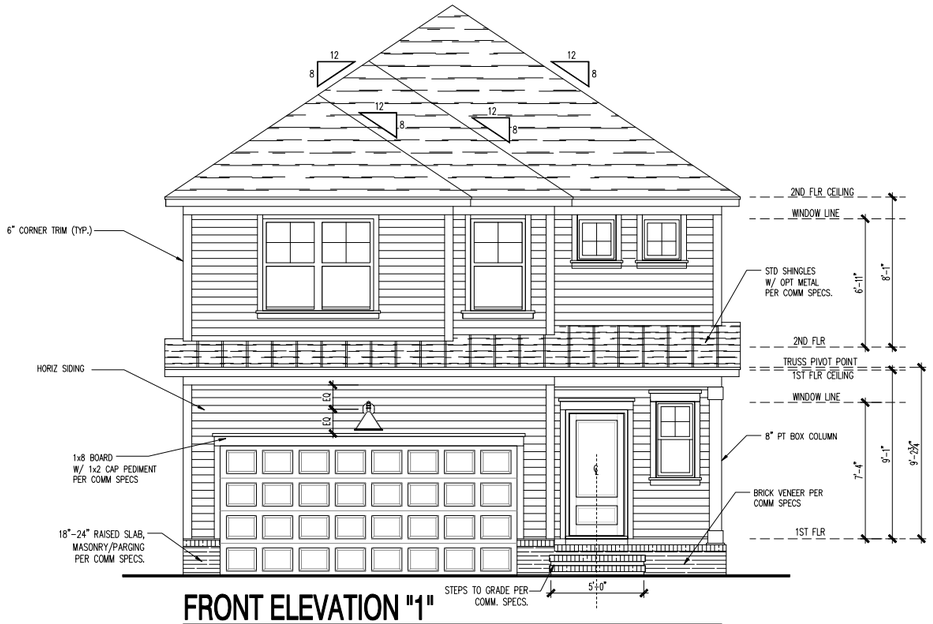


## FRONT ELEVATION "1"

SCALE : 1/4" = 1'-0"

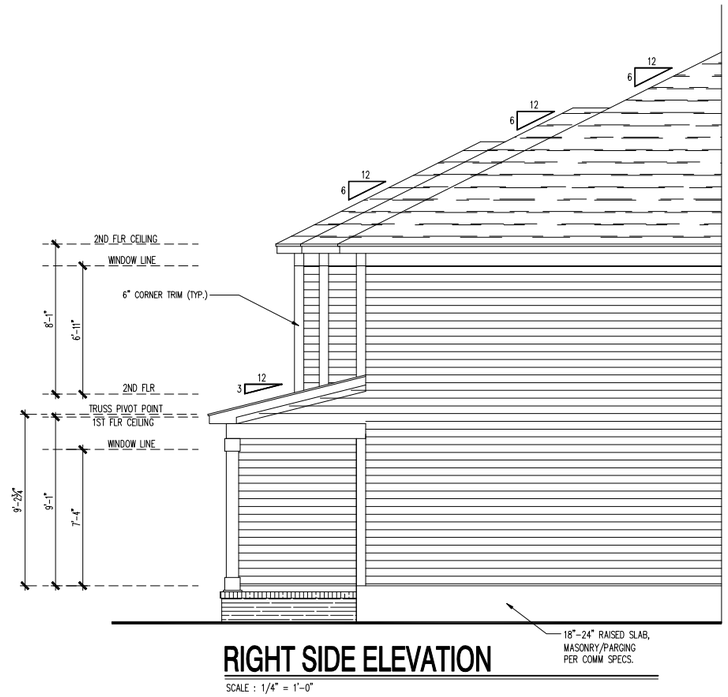


## RIGHT SIDE ELEVATION

SCALE : 1/4" = 1'-0"

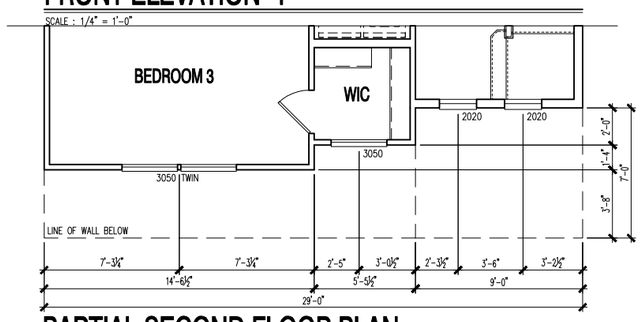


## PARTIAL SECOND FLOOR PLAN

SCALE : 1/4" = 1'-0"

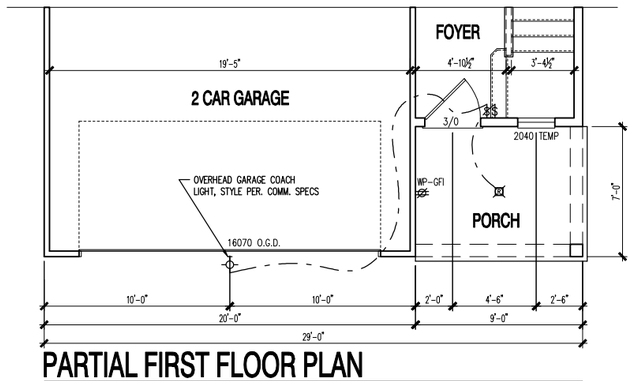


## PARTIAL FIRST FLOOR PLAN

SCALE : 1/4" = 1'-0"

**ATTIC VENTILATION :** (300 SQ FT ATTIC SPACE / 1 SQ FT VENTILATION)
W/ 40%-50% REQ. VENTS GREATER THAN OR EQUAL TO 3' ABOVE
EAVE / CORNICE VENTS PER IRC R806.2

MORRISON ELEV 1 1095 SQ FT UNDER ROOF ATTIC /
300 SQ FT / 1 SQ FT = 3.65 SQ FT VENTILATION

RIDGE VENT 18 SQ IN = (.125 SQ FT)
BOX VENT 50 SQ IN = (.3472 SQ FT)
SOFFIT VENT 9 SQ IN = (.0625 SQ FT)

3.65 SQ FT x 50 % = 1.825 SQ FT RIDGE, 3.65 SQ FT x 50 % = 1.825 SQ FT SOFFIT

| RIDGE VENT | OR W/ HIP, BOX VENT |
|---|---|
| 1.825 SQ FT = 14.6 FEET OF RIDGE VENT | 1.825 SQ FT = 5.3 BOX VENT(S) |
| 0.125 SQ FT | 0.3472 SQ FT |

SOFFIT VENT
1.825 SQ FT = 29.2 FEET OF SOFFIT VENT
0.06255 SQ FT

*CALCULATIONS REFLECT 50 % RIDGE AND 50 % SOFFIT VENTS ALLOWABLE PER SECTION IRC R806.2

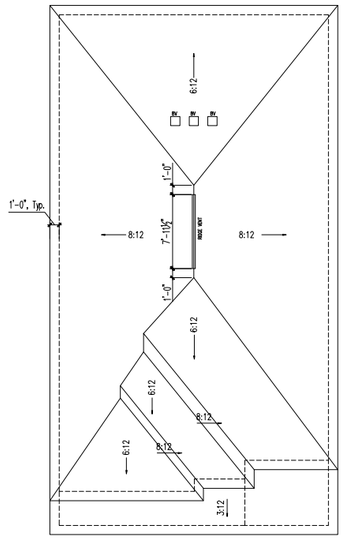


## ROOF PLAN

SCALE : 1/8" = 1'-0"



Elevations are for illustrative purposes only; elevations submitted at MSP will be consistent with the architectural standards included in the PUD.

(c) Copyright Pulte Home Corporation - 2019

Southeast Area
2475 Northwinds Pkwy. Suite 525
Alpharetta, GA 30009 (770) 381-3450

Pulte Homes

The MORRISON
FRONT ELEVATION "1"

PRODUCTION MANAGER
ACKLEY
CURRENT RELEASE DATE: 7-30-17

| REV # | DATE / DESCRIPTION |
|---|---|
| 1 | 6-21-18 |
| 2 | 1-8-19 |

PROJECT TYPE
SINGLE FAMILY

COMMUNITY NAME
SOUTHEAST AREA SET
LAWSON COMMUNITY ID
-

GARAGE HANDING

SPECIFICATION LEVEL
P1, P2

PLAN NAME
MORRISON
NPC PLAN NUMBER
-
LAWSON PLAN ID

LEGACY PLAN NUMBER / NAME
same as current

SHEET
3.1

NOTE: SCALES NOTED ON DRAWINGS RELATE TO FULL SIZE PLOTS ON 22x34 SHEETS - 11x17 SHEETS REPRESENT 1/2 SCALE PLOTS

PLOTTED: August 2, 2019 / Paul Howard / MORRISON ELEVATIONS - LEFT.DWG

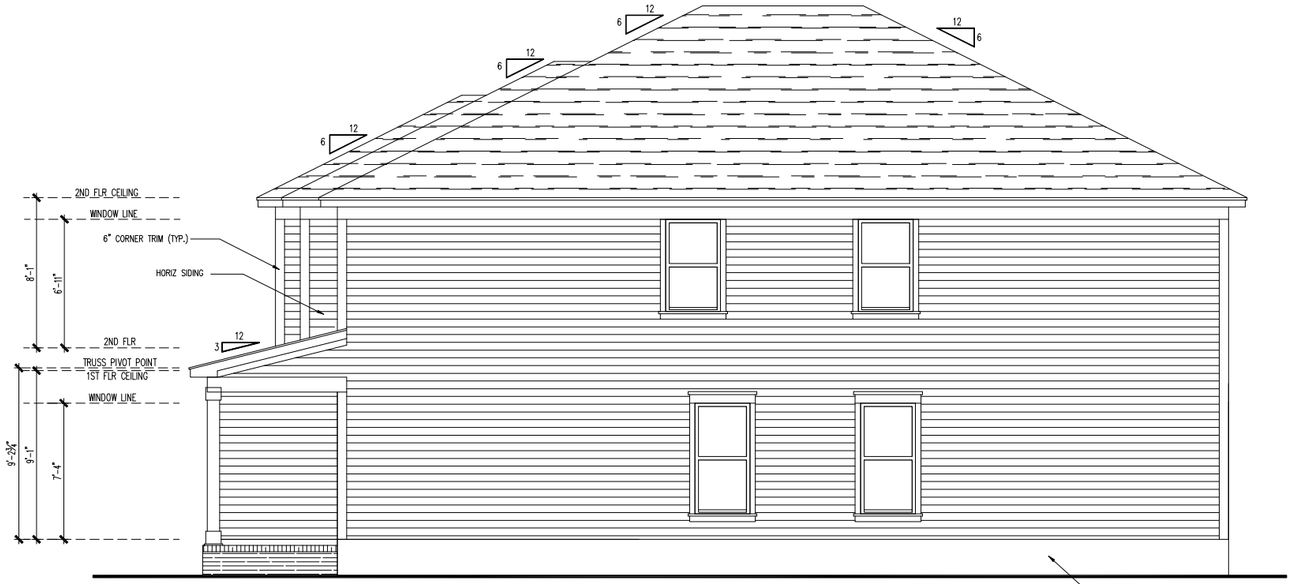


## RIGHT SIDE ELEVATION

SCALE : 1/4" = 1'-0"




## REAR ELEVATION

SCALE : 1/4" = 1'-0"

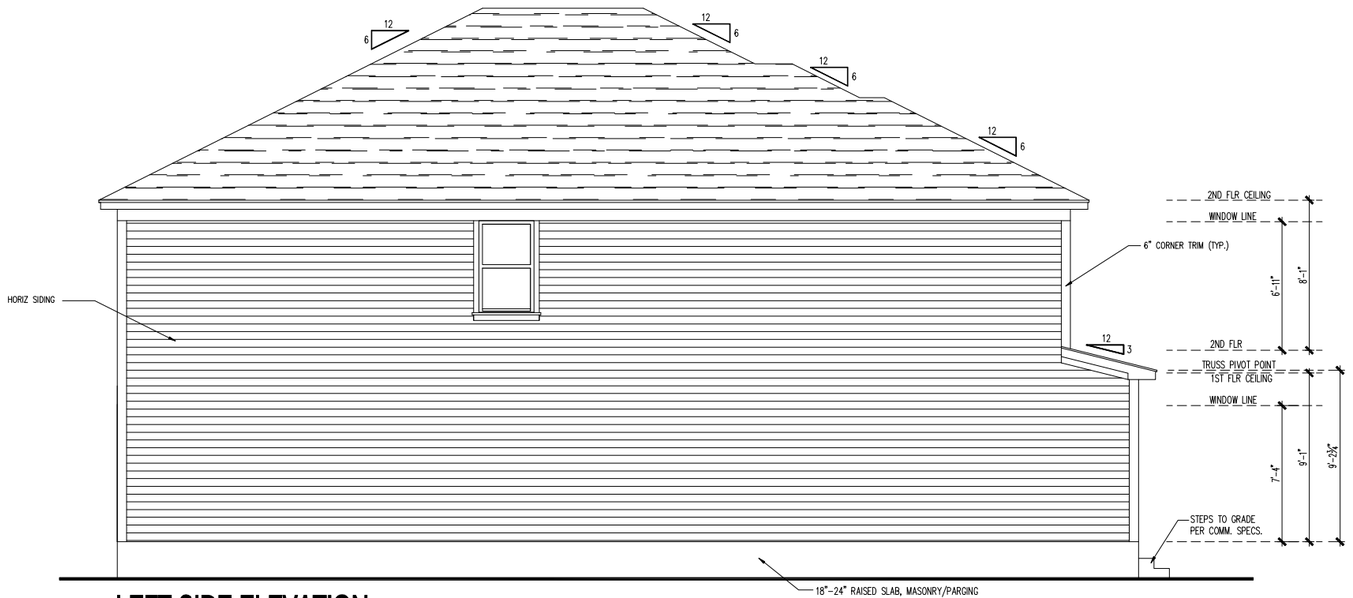


## LEFT SIDE ELEVATION

SCALE : 1/4" = 1'-0"



(c) Copyright Pulte Home Corporation - 2019

Southeast Area
2475 Northwinds Pkwy. Suite 525
Alpharetta, GA 30009 (770) 381-3450

Pulte Homes

The MORRISON
SIDE / REAR ELEVATIONS

PRODUCTION MANAGER
ACKLEY
CURRENT RELEASE DATE: 7-30-17

| REV # | DATE / DESCRIPTION |
|---|---|
| △ | 6-21-18 |
| △ | 1-8-19 |
| △ | |
| △ | |
| △ | |
| △ | |
| △ | |
| △ | |
| △ | |

PROJECT TYPE
SINGLE FAMILY

COMMUNITY NAME
SOUTHEAST AREA SET
LAWSON COMMUNITY ID
-

GARAGE HANDING

SPECIFICATION LEVEL
P1, P2

PLAN NAME
MORRISON
NPC PLAN NUMBER
-
LAWSON PLAN ID

LEGACY PLAN NUMBER / NAME
same as current

SHEET
3.SR

NOTE: SCALES NOTED ON DRAWINGS RELATE TO FULL SIZE PLOTS ON 22x34 SHEETS - 11x17 SHEETS REPRESENT 1/2 SCALE PLOTS

PLOTTED: February 5, 2019 / Paul Howard / MORRISON ELEVATIONS - LEFT.DWG

Elevations are for illustrative purposes only; elevations submitted at MSP will be consistent with the architectural standards included in the PUD.

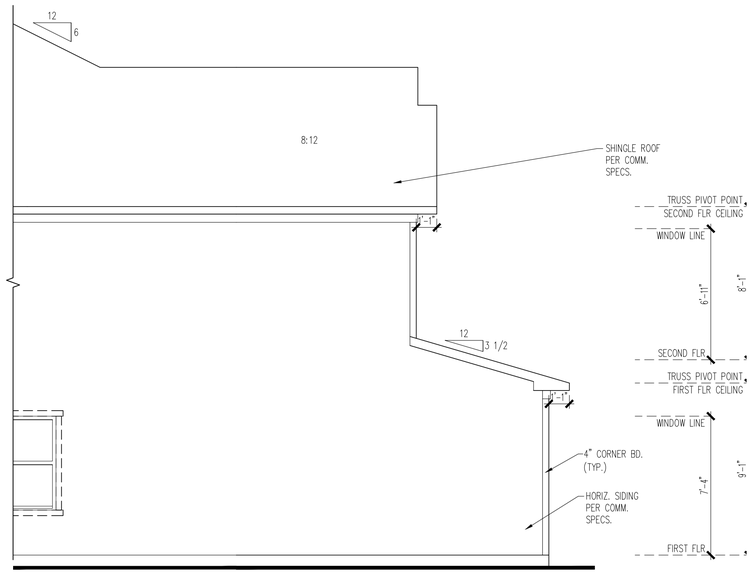


## PARTIAL LEFT SIDE ELEVATION - "LC2A"

SCALE : 1/4" = 1'-0"

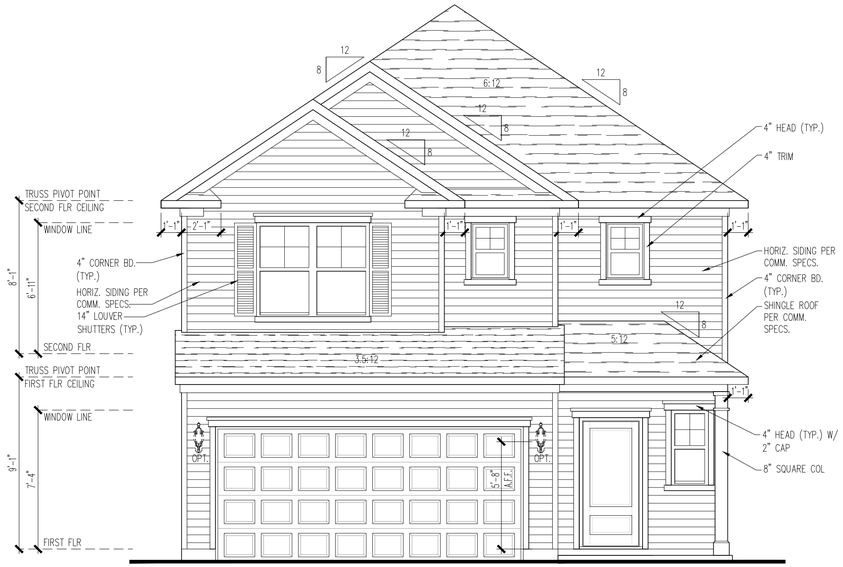


## FRONT ELEVATION - "LC2A" - FRONT ENTRY GARAGE

SCALE : 1/4" = 1'-0"

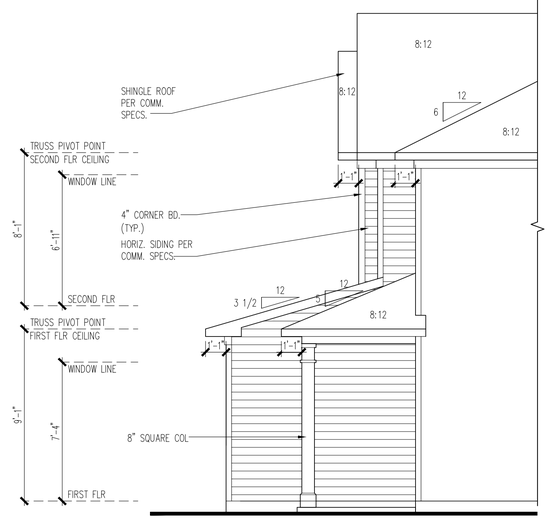


## PARTIAL RIGHT SIDE ELEVATION - "LC2A"

SCALE : 1/4" = 1'-0"

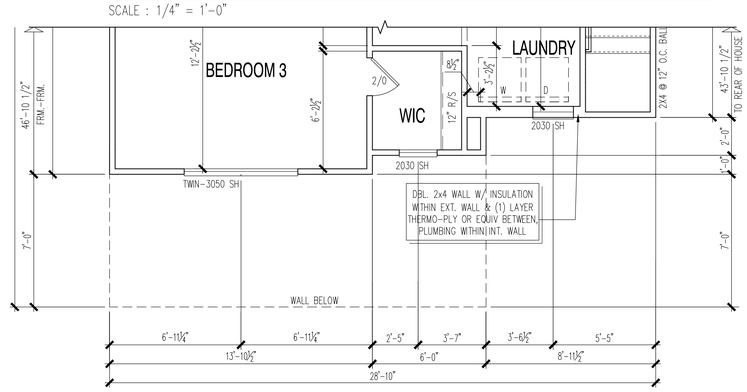


## PARTIAL SECOND FLOOR PLAN

SCALE : 1/4" = 1'-0"

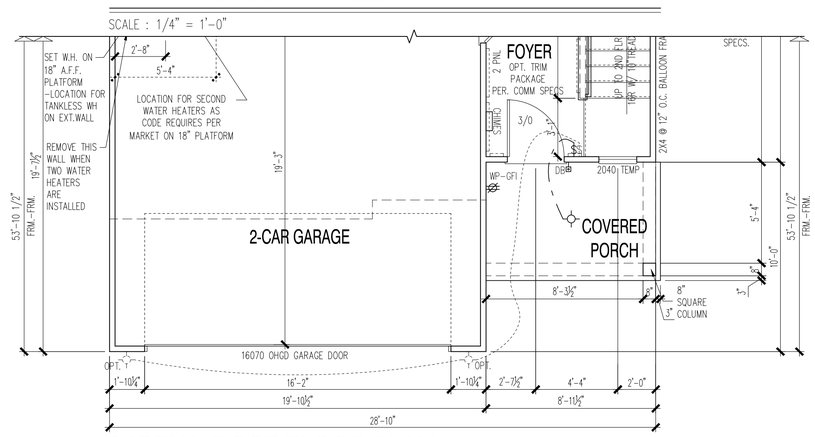


## PARTIAL FIRST FLOOR PLAN

SCALE : 1/4" = 1'-0"

NOTE:
ADD 1X4 WINDBORNE DEBRIS TRIM AROUND ALL WINDOWS PER COMM SPEC

©COPYRIGHT: 2019 PB

Southeast Zone
2475 Northwinds Pkwy, Suite 600
Alpharetta, GA 30009 (770) 381-3450

PulteGroup

The Murray
FRONT ELEVATION "LC2A"
FRONT ENTRY GARAGE

PRODUCT MANAGER

INITIAL RELEASE
DATE: 00/00/0000

| REV# | DATE/DESCRIPTION |
|---|---|
| 1 | ---- ---- |
| 2 | ---- ---- |
| 3 | ---- ---- |
| 4 | ---- ---- |
| 5 | ---- ---- |
| 6 | ---- ---- |
| 7 | ---- ---- |
| 8 | ---- ---- |
| 9 | ---- ---- |
| 10 | ---- ---- |

PROJECT TYPE
Single Family

SPECIFICATION LEVEL
Pulte

PLAN NAME
Murray

NPC NUMBER
8128.200

SHEET
3.11.0

PLOTTED: November 20, 2019 / tmcdowell / 3.11.0 FRONT ELEVATION LC2A.dwg



Elevations are for illustrative purposes only; elevations submitted at MSP will be consistent with the architectural standards included in the PUD.

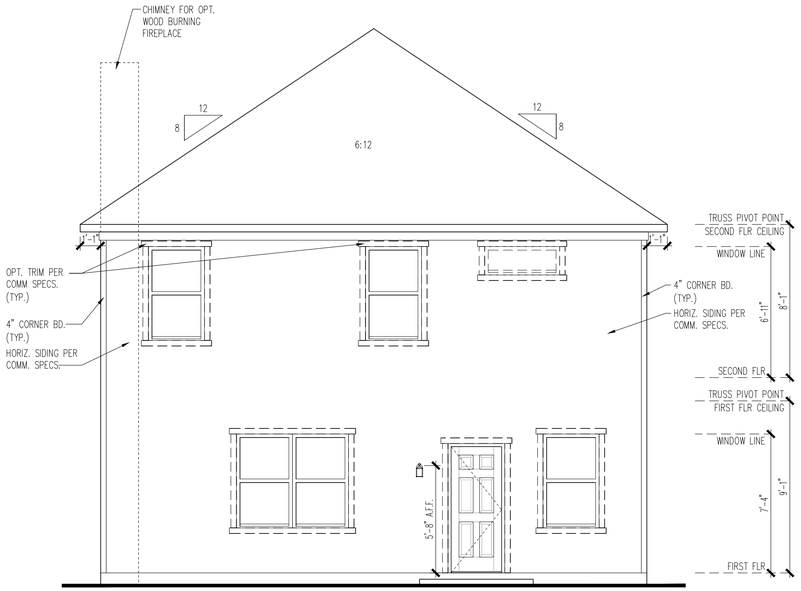


## REAR ELEVATION - "LC1A" - FRONT ENTRY GARAGE

SCALE : 1/4" = 1'-0"

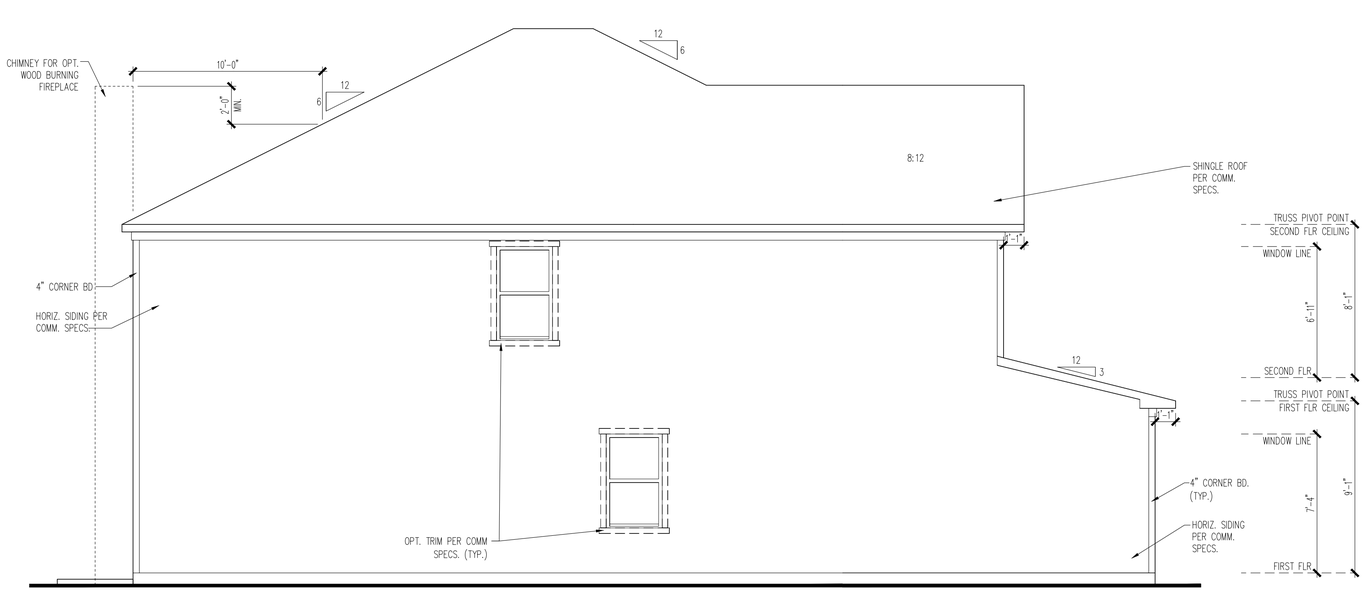


## LEFT SIDE ELEVATION - "LC1A" - FRONT ENTRY GARAGE

SCALE : 1/4" = 1'-0"

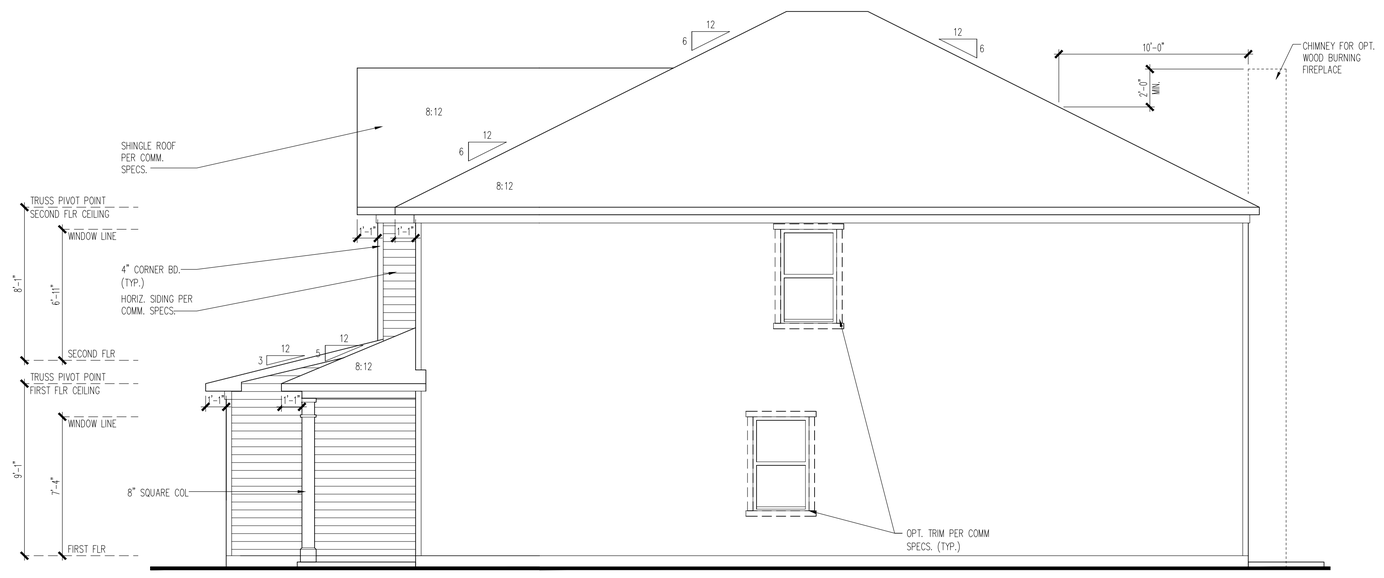


## RIGHT SIDE ELEVATION - "LC1A" - FRONT ENTRY GARAGE

SCALE : 1/4" = 1'-0"

©COPYRIGHT: 2019 PB

Southeast Zone
2475 Northwinds Pkwy, Suite 600
Alpharetta, GA 30009 (770) 381-3450

PulteGroup

The Murray
SIDE AND REAR ELEVATIONS "LC1A"
FRONT ENTRY GARAGE

| | |
|---|---|
| PRODUCT MANAGER | |
| INITIAL RELEASE DATE: | 00/00/0000 |

| REV# | DATE/DESCRIPTION |
|---|---|
| 1 | ---- ---- |
| 2 | ---- ---- |
| 3 | ---- ---- |
| 4 | ---- ---- |
| 5 | ---- ---- |
| 6 | ---- ---- |
| 7 | ---- ---- |
| 8 | ---- ---- |

PROJECT TYPE: Single Family

SPECIFICATION LEVEL: Pulte

PLAN NAME: Murray

NPC NUMBER: 8128.200

SHEET: 3.SR.3

PLOTTED: November 20, 2019 / astbutler / J:\SR.3 SIDE AND REAR ELEVATIONS LC1A.dwg



Elevations are for illustrative purposes only; elevations submitted at MSP will be consistent with the architectural standards included in the PUD.

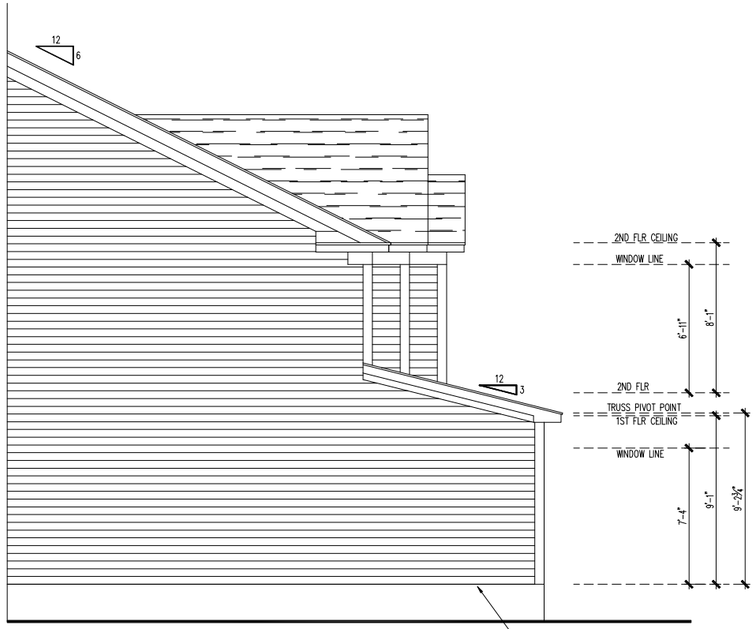


## LEFT SIDE ELEVATION

SCALE : 1/4" = 1'-0"

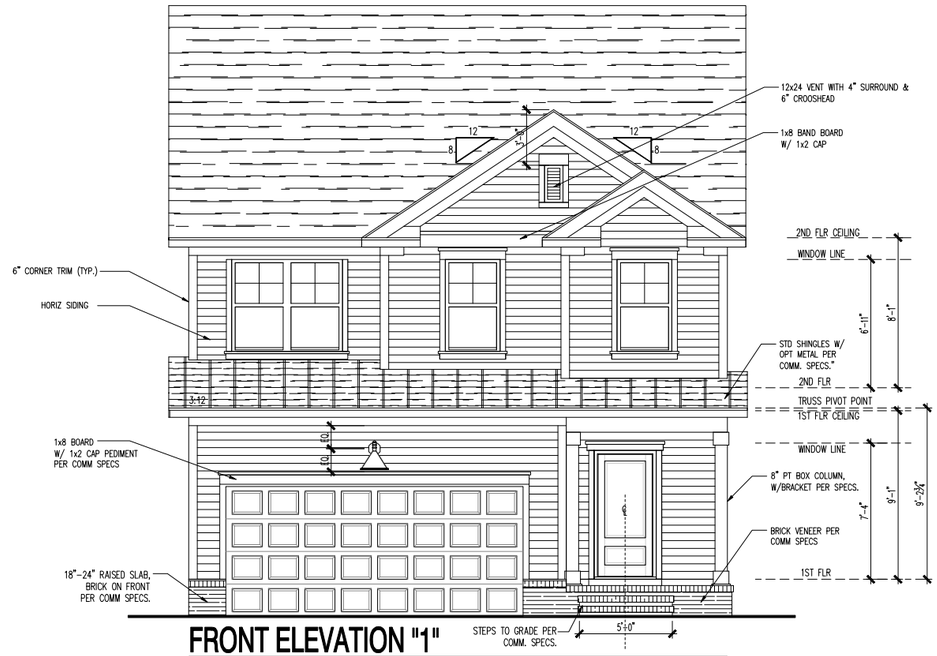


## FRONT ELEVATION "1"

SCALE : 1/4" = 1'-0"

**ATTIC VENTILATION :** (300 SQ FT ATTIC SPACE / 1 SQ FT VENTILATION)
W/ 50%-80% REQ. VENTS GREATER THAN OR EQUAL TO 3' ABOVE EAVE / CORNICE VENTS PER IRC R806.2

ELEVATIONS "ALL" 1180 SQ FT UNDER ROOF ATTIC /
300 SQ FT / 1 SQ FT = 3.93 SQ FT VENTILATION

RIDGE VENT 18 SQ IN = (.125 SQ FT)
SOFFIT VENT 9 SQ IN = (.0625 SQ FT)

3.93 SQ FT x 50 % = 1.967SQ FT RIDGE, 3.93 SQ FT x 50 % = 1.967 SQ FT SOFFIT
RIDGE VENT
1.967 SQ FT = 15.7 FEET OF RIDGE VENT
0.125 SQ FT
SOFFIT VENT
1.967 SQ FT = 31.5 FEET OF SOFFIT VENT
0.0625SQ FT

*CALCULATIONS REFLECT 50 % RIDGE AND 50 % SOFFIT VENTS ALLOWABLE PER SECTION IRC R806.2

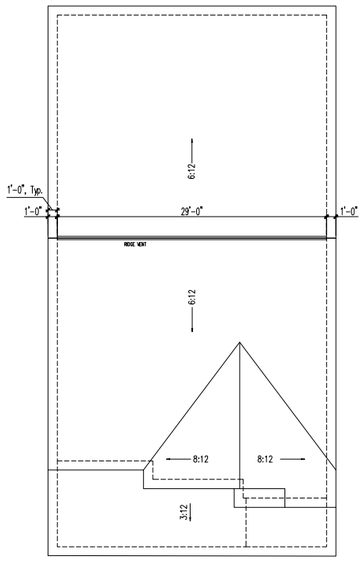


## ROOF PLAN

SCALE : 1/8" = 1'-0"

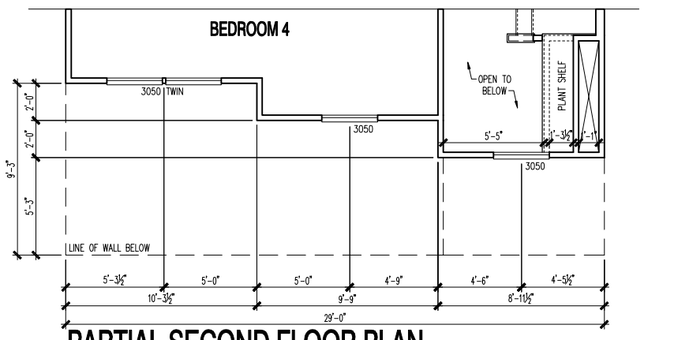


## PARTIAL SECOND FLOOR PLAN

SCALE : 1/4" = 1'-0"

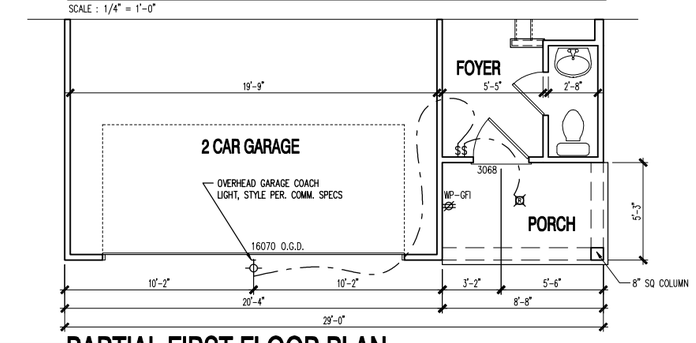


## PARTIAL FIRST FLOOR PLAN

SCALE : 1/4" = 1'-0"



Elevations are for illustrative purposes only; elevations submitted at MSP will be consistent with the architectural standards included in the PUD.

(c) Copyright Pulte Home Corporation - 2019

Southeast Area
2475 Northwinds Pkwy. Suite 525
Alpharetta, GA 30009 (770) 381-3450

Pulte Homes

The PRESTON
FRONT ELEVATION "1"

PRODUCTION MANAGER
ACKLEY
CURRENT RELEASE DATE: 7-30-17

| REV # | DATE / DESCRIPTION |
|---|---|
| △ | 6-21-18 |
| △ | 1-8-19 |
| △ | |
| △ | |
| △ | |
| △ | |
| △ | |
| △ | |
| △ | |

PROJECT TYPE
SINGLE FAMILY

COMMUNITY NAME
SOUTHEAST AREA SET
LAWSON COMMUNITY ID
—

GARAGE HANDING

SPECIFICATION LEVEL
P1, P2

PLAN NAME
PRESTON
NPC PLAN NUMBER
—
LAWSON PLAN ID

LEGACY PLAN NUMBER / NAME
same as current

SHEET
3.1

NOTE: SCALES NOTED ON DRAWINGS RELATE TO FULL SIZE PLOTS ON 22x34 SHEETS - 11x17 SHEETS REPRESENT 1/2 SCALE PLOTS

PLOTTED: August 2, 2019 / Paul Howard / PRESTON ELEVATIONS - LEFT.DWG

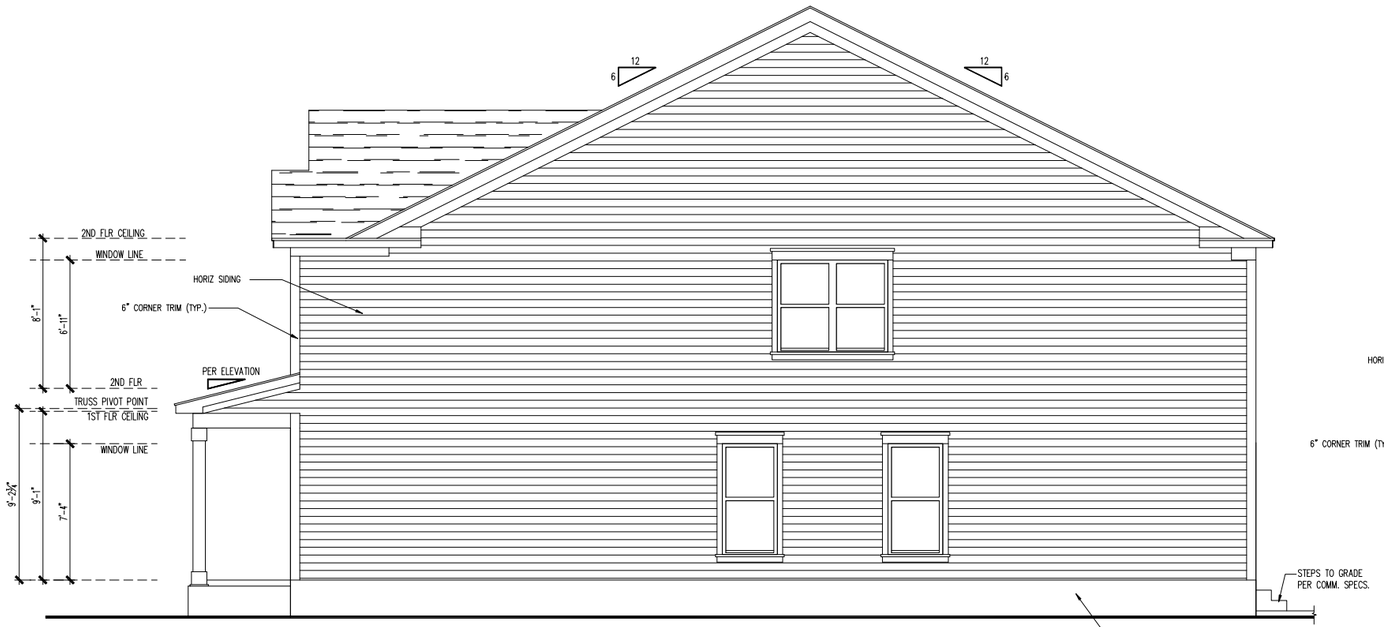


## RIGHT SIDE ELEVATION

SCALE : 1/4" = 1'-0"

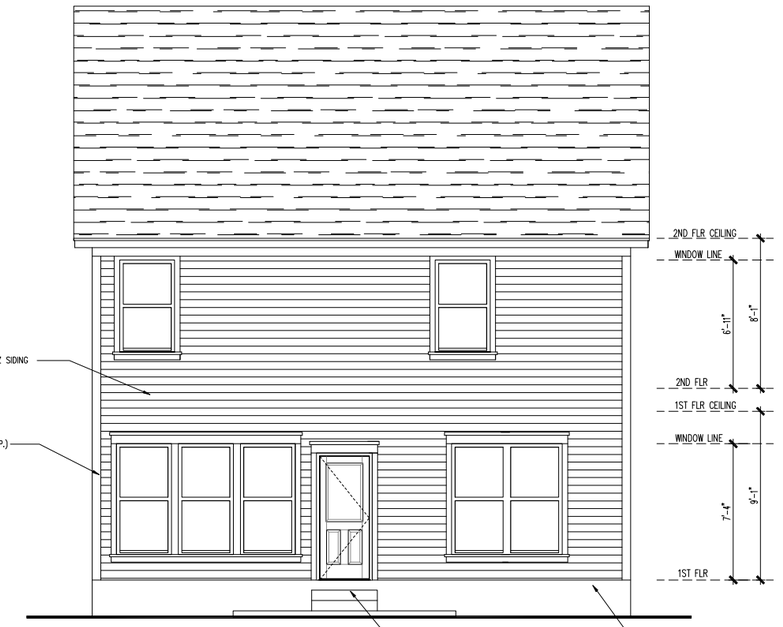


## REAR ELEVATION

SCALE : 1/4" = 1'-0"

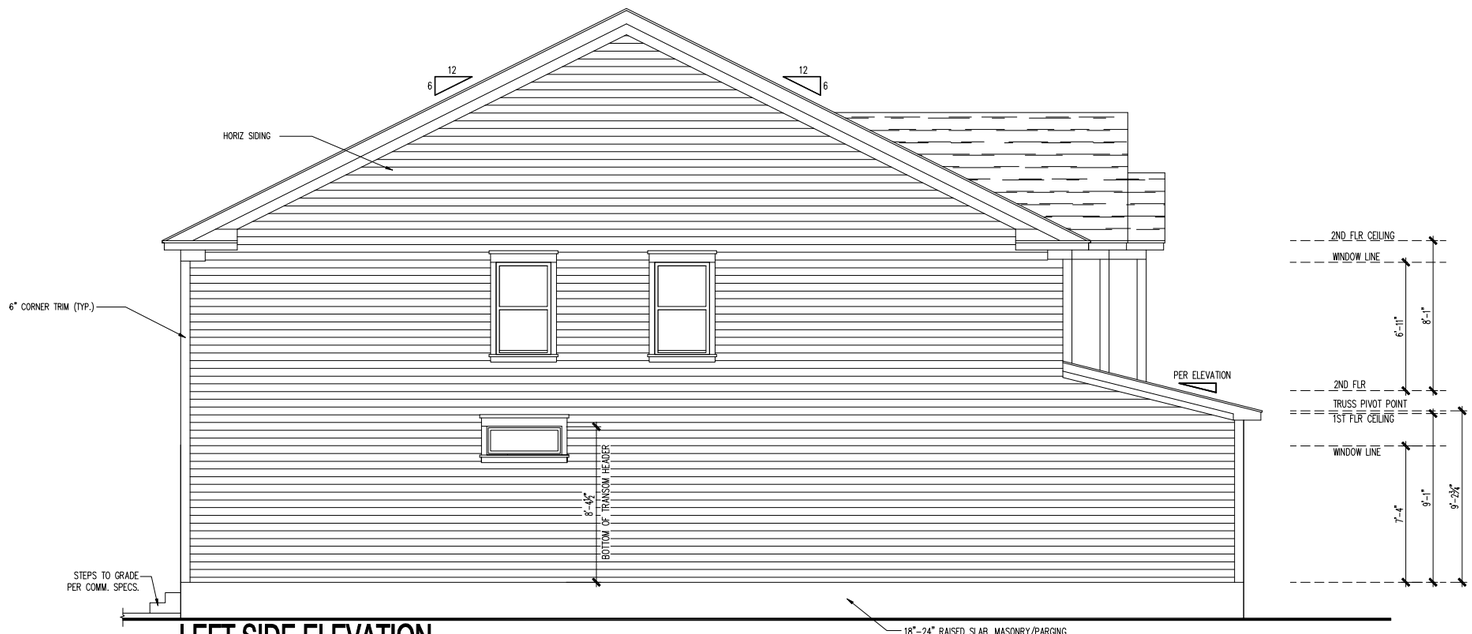


## LEFT SIDE ELEVATION

SCALE : 1/4" = 1'-0"

(c) Copyright Pulte Home Corporation - 2019

**Southeast Area**
2475 Northwinds Pkwy. Suite 525
Alpharetta, GA 30009 (770) 381-3450

Pulte Homes

The PRESTON
SIDE / REAR ELEVATIONS

PRODUCTION MANAGER
ACKLEY
CURRENT RELEASE DATE: 7-30-17

| REV # | DATE / DESCRIPTION |
|---|---|
| △ | 6-21-18 |
| △ | 1-8-19 |
| △ | |
| △ | |
| △ | |
| △ | |
| △ | |
| △ | |

PROJECT TYPE
SINGLE FAMILY

COMMUNITY NAME
SOUTHEAST AREA SET
LAWSON COMMUNITY ID
--

GARAGE HANDING

SPECIFICATION LEVEL
P1, P2

PLAN NAME
PRESTON
NPC PLAN NUMBER
--
LAWSON PLAN ID

LEGACY PLAN NUMBER / NAME
same as current

SHEET
3.SR

NOTE: SCALES NOTED ON DRAWINGS RELATE TO FULL SIZE PLOTS ON 22x34 SHEETS - 11x17 SHEETS REPRESENT 1/2 SCALE PLOTS

PLOTTED: August 2, 2019 / Paul Howard / PRESTON ELEVATIONS - LEFT.DWG



Elevations are for illustrative purposes only; elevations submitted at MSP will be consistent with the architectural standards included in the PUD.

# Hackney Tract Subdivision

## Apex, NC




PREPARED FOR

WithersRavenel
c/o Nick Antrilli, PE
115 MacKenan Drive
Cary, NC 27511

PREPARED BY

**VHB Engineering NC, P.C. (C-3705)**
Venture I
940 Main Campus Drive, Suite 500
Raleigh, NC 27606-5217
919.829.0328

December 22, 2020

# Executive Summary

## Project Background

There are plans to construct the proposed Hackney Tract Subdivision on the north side of Olive Chapel Road, east of the newly completed Richardson Road, in Apex, NC (Figure 1). The proposed Hackney Tract Subdivision is planned to consist of up to 100 single-family and 133 multi-family townhomes with full build-out expected in 2024. A traffic impact analysis is required by the Town of Apex and North Carolina Department of Transportation (NCDOT) to analyze the potential traffic impacts of the proposed the Hackney Tract Subdivision and to identify any necessary roadway improvements.

As shown on the conceptual site plan (Figure 2), the development will be accessed through one full movement access along Olive Chapel Road:

- Access #1: full movement access on Olive Chapel Road, approximately 2,500 feet east of Richardson Road

In addition, access will be provided via Hasse Avenue extension to the north to Richardson Road, and cross-connections will be provided via local street extensions to the west to Smith Farm.

Based on the agreement with the Town of Apex and NCDOT (Appendix A), the following existing and future intersections were included in the study and analyzed under the AM and PM peak hour conditions:

- SR 1160 (Olive Chapel Road) and SR 1145 (Richardson Road) (unsignalized/future signalized)
- SR 1160 (Olive Chapel Road) and SR 1162 (Apex Barbecue Road) (unsignalized)
- Richardson Road and Hasse Avenue (unsignalized)
- US Highway 64 East at Richardson Road (unsignalized/future signalized)
- US Highway 64 West at U-turn east of Richardson Road (unsignalized/future signalized)
- SR 1160 (Olive Chapel Road) and Future Access #1/Hasse Avenue Extension (full movement access)

The analysis for the Hackney Tract Subdivision was performed under three (3) scenarios: Existing (2020), No-Build (2024) and Build (2024) conditions. The Existing

(2020) scenario includes AM and PM peak hour analysis based on turning movement count data collected in November 2020. The No-Build (2024) scenario includes existing traffic, a three percent (3%) annual growth rate, and site trips generated by seven planned developments within or adjacent to the study area. The Build (2024) scenario includes No-Build (2024) volumes with the addition of site trips generated by the proposed Hackney Tract Subdivision.

## Existing (2020) Conditions

Existing analyses were conducted based on current roadway geometrics and intersection turning movement counts.

As reported in the Summary Level of Service (LOS) table on page v, all of the stop- and yield-controlled approaches in the study area are operating at acceptable levels of service (i.e., LOS D or better) during both the AM and PM peak hours under the Existing (2020) conditions, with an exception that the southbound approach of Richardson Road (westbound left-turn of US 64) at US 64 Eastbound operates at LOS F during both peak hours.

## No-Build (2024) Conditions

Based on the requirements by the Town of Apex and NCDOT, an annual growth rate of three percent (3%) was applied to the existing traffic to account for ambient growth between the base year (2020) and the future analysis year (2024). In addition, site trips generated by seven (7) planned developments in the study area were aggregated and included in the No-Build (2024) volumes. It should be noted that although significant traffic increases were expected with the inclusion of background developments, an undiscounted annual growth rate was applied to offset the impacts on traffic data collected in 2020 with COVID-19 pandemic restrictions in place.

As for transportation improvements, mitigation requirements associated with Sweetwater are expected to include two new signals and additional turn lanes along US 64 at the Richardson Road and U-turn east of Richardson Road intersections; in addition, a new signal is expected to be installed by Smith Farm at the Olive Chapel Road and Richardson Road intersection once it is warranted.

Based on the No-Build (2024) analysis, the study area is projected to experience traffic and delay increases, but the impacts will be substantially mitigated by the background transportation improvements. As a result, all of the signalized intersections and stop-controlled approaches in the study area are projected to operate at acceptable levels of service except that the stop-controlled northbound approach of Apex Barbecue Road at Olive Chapel Road is projected to decline to operate at LOS F in the PM peak hour.

## Trip Generation and Assignment

Trip generation was conducted based on the most appropriate corresponding trip generation codes included in the *ITE Trip Generation Manual, 10th Edition* and the suggested method of calculation in the NCDOT's *"Rate vs. Equation" Spreadsheet*. To provide a conservative analysis, no transit, walking, or bicycling reductions will be applied.

| Land Use Code | Land Use | Unit | ADT | AM Peak Hour | | | PM Peak Hour | | |
|---|---|---|---|---|---|---|---|---|---|
| | | | | Enter | Exit | Total | Enter | Exit | Total |
| 210 | Single-Family Detached Housing | 100 du | 1,040 | 19 | 57 | 76 | 64 | 38 | 102 |
| 220 | Multi-Family Housing (Low-Rise) | 133 du | 965 | 14 | 49 | 63 | 48 | 28 | 76 |
| *Development Total* | | | *2,005* | *33* | *106* | *139* | *112* | *66* | *178* |

In total, the proposed Hackney Tract Subdivision is projected to generate 2,005 daily trips with 139 trips (33 entering, 106 exiting) occurring in the AM peak hour and 178 trips (112 entering, 66 exiting) occurring the PM peak hour. The resulting site trips were distributed in accordance with the existing traffic patterns and anticipated land uses.

## Build (2024) Conditions

The Build (2024) conditions account for both the No-Build (2024) traffic and site traffic generated by the proposed Hackney Tract Subdivision.

As shown in the Summary LOS table on page v, the stop-controlled northbound approach of Apex Barbeque Road at Olive Chapel Road is projected to continue to operate at failing levels of services in the PM peak hour with delay increases. The rest of the intersections included in the study area are projected to continue operating at acceptable levels of service during both peak hours. The planned stop-controlled Future Access #1 is projected to operate at LOS C in the AM peak hour and LOS D in the PM peak hour.

## Roadway Improvement Recommendations

As indicated in the traffic operations analyses, the proposed Hackney Tract Subdivision is projected to have minimum impacts on traffic operations of the surrounding roadway network and intersections. Nevertheless, the following roadway improvements are recommended to improve traffic operations and safety:

*SR 1160 (Olive Chapel Road) and Future Access #1/Hasse Avenue Extension (unsignalized, full movement)*

Future Access #1 is projected to operate at acceptable levels of service during the AM and PM peak hour with a two-lane cross-section. Although traffic volumes are not projected to automatically warrant turn lanes on Olive Chapel Road, dedicated turn lanes should be provided with the required frontage widening to meet the Town of Apex Comprehensive Transportation Plan standards. Therefore, the following site access configuration and transportation improvements are recommended at this intersection:

- Construct Future Access #1 to consist of one inbound lane and one outbound lane.
- Provide a dedicated left-turn lane on eastbound Olive Chapel Road with 100 feet of storage length and appropriate taper.
- Provide a dedicated right-turn lane on westbound Olive Chapel Road with 100 feet of storage length and appropriate taper.

*SR 1160 (Olive Chapel Road) and SR 1162 (Apex Barbecue Road) (unsignalized)*

Traffic analysis indicated that the northbound approach of Apex Barbecue Road is projected to operate at LOS F in the PM peak hour under the No-Build and Build conditions. The intersection is not anticipated to meet warrants for installing a new traffic signal, while options for adding new turn lanes are limited due to the skewed angle of intersection on a curve of Olive Chapel Road and potential right-of-way/drainage restrictions. As shown on the Apex Comprehensive Transportation Plan, this intersection is identified for future intersection realignment. Since site trips are anticipated to contribute less than 4% traffic increases in the AM and 3% in the PM at this intersection (increases of only 1 VPH in the AM peak hour and 2 VPH in the PM peak on the stop-controlled approach), improvement should not be required by this development based on the Town of Apex UDO. Nevertheless, alternative traffic control method (such as AWSC), if warranted by crash analysis, may be considered before this intersection is realigned in the future based on the Town of Apex CTP.

The rest of study area intersections are expected to operate acceptably. Therefore, no mitigation is required.

## Summary Level of Service Table

| Intersection and Approach | Control | Existing (2020) | | No-Build (2024) | | Build (2024) | |
|---|---|---|---|---|---|---|---|
| | | AM | PM | AM | PM | AM | PM |
| **Richardson Rd and Olive Chapel Rd** | TWSC/ Signal | - | - | **A (9.7)** | **B (11.8)** | **A (9.8)** | **B (12.0)** |
| Eastbound | | --- | --- | A-9.7 | B-10.7 | A-9.8 | B-10.9 |
| Westbound | | --- | --- | B-10.3 | B-12.0 | B-10.5 | B-12.2 |
| Northbound | | B-11.9 | B-14.1 | B-10.2 | B-12.7 | B-10.3 | B-13.0 |
| Southbound | | B-11.7 | C-15.5 | A-8.4 | B-11.5 | A-8.5 | B-11.6 |
| **Apex Barbecue Rd and Olive Chapel Rd** | TWSC | - | - | - | - | - | - |
| Northbound | | B-11.8 | C-19.5 | C-16.8 | F-92.5 | C-17.9 | F-134.5 |
| **Richardson Rd and Little Gem Ln/Hasse Ave** | TWSC | - | - | - | - | - | - |
| Eastbound | | A-9.8 | B-10.2 | C-16.5 | C-21.8 | C-19.1 | D-32.0 |
| Westbound | | A-9.7 | A-9.9 | C-15.1 | C-19.1 | C-17.0 | C-21.9 |
| **Richardson Rd/WB Left-Over and US 64** | TWSC/ Signal | - | - | **C (20.7)** | **D (42.0)** | **C (22.0)** | **D (44.5)** |
| Eastbound | | --- | --- | C-20.7 | D-51.3 | C-23.7 | E-56.0 |
| Northbound | | C-23.5 | C-23.3 | C-28.2 | D-47.4 | C-28.5 | D-50.1 |
| Southbound | | F-66.0 | F-216.7 | B-10.9 | B-19.6 | A-9.8 | B-19.5 |
| **U-Turn East of Richardson Rd and US 64** | TWSC/ Signal | - | - | **B (11.8)** | **C (27.6)** | **B (12.5)** | **C (30.9)** |
| Westbound | | --- | --- | A-9.6 | C-20.5 | B-10.5 | C-24.1 |
| Northbound | | B-14.2 | C-18.2 | C-27.8 | E-59.9 | C-26.5 | E-62.1 |
| **Olive Chapel Rd & Hasse Ave/Future Access #1** | TWSC | - | - | - | - | - | - |
| Southbound | | --- | --- | --- | --- | C-16.1 | D-25.0 |

LEGEND: **X (XX)** = Overall intersection LOS (intersection delay in sec/veh);

X - XX = approach LOS – approach delay in sec/veh

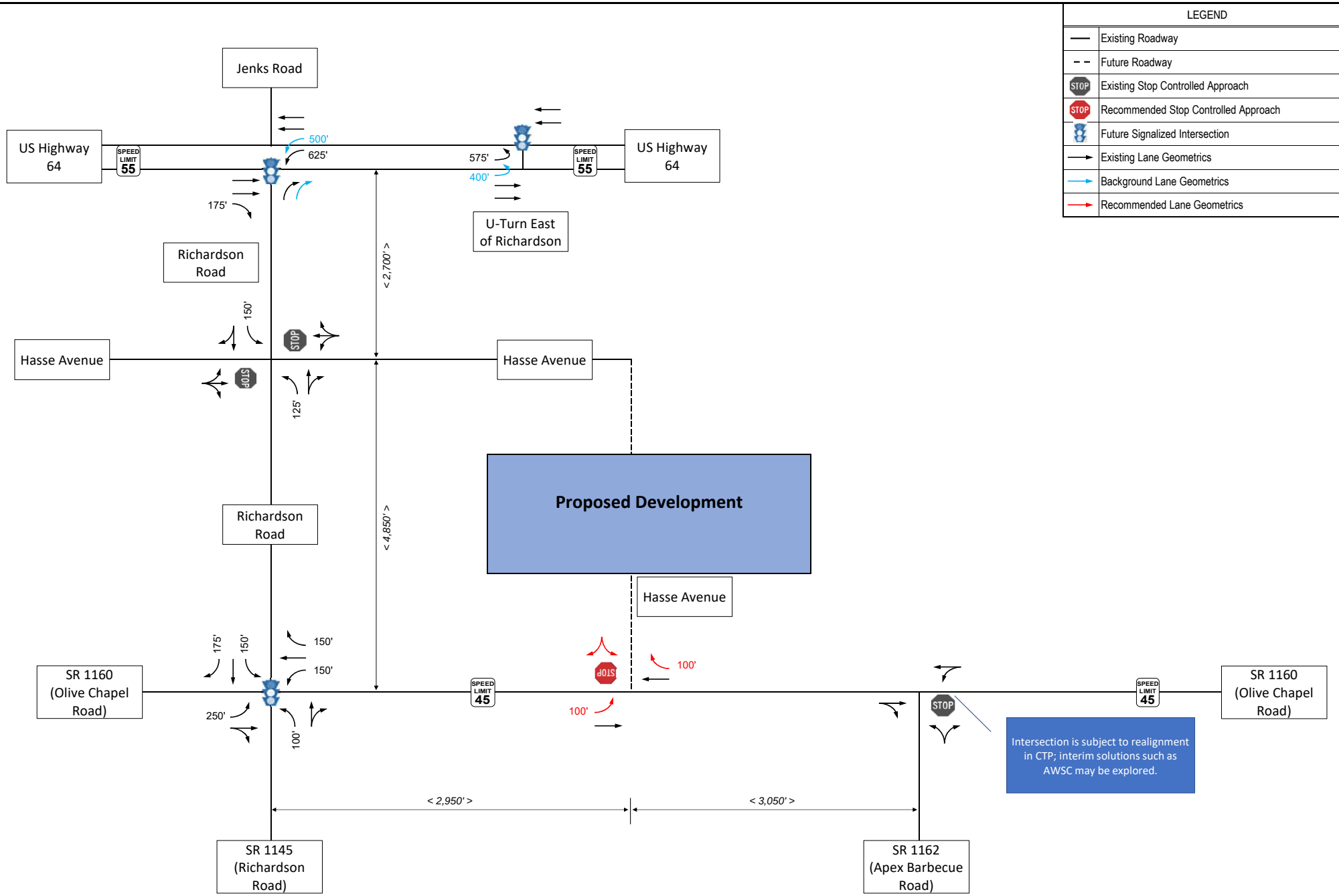


Future (2024) Lane [illegible] and Traffic Control



Hackney Tract Subdivision
Apex, NC

# Table of Contents

**Introduction** ..... **1**

**Existing (2020) Conditions** ..... **4**

Existing Roadway Conditions ..... 4
Existing Turning Movement Data ..... 7
Level of Service Criteria ..... 7
Level of Service Analysis ..... 8

**No-Build (2024) Conditions** ..... **11**

Background Growth and Development ..... 11
Level of Service Analysis ..... 13

**Build (2024) Conditions** ..... **17**

Trip Generation ..... 17
Traffic Distribution and Assignment ..... 17
Level of Service Analysis ..... 21

**Findings and Conclusions** ..... **24**

## Appendices

APPENDIX A: Memorandum of Understanding

APPENDIX B: Turning Movement Counts

APPENDIX C: Background Projects

APPENDIX D: Intersection Capacity Analysis

APPENDIX E: Turn Lane Warrant Analysis

# Tables


| Table No. | Description | Page |
|---|---|---|
| Table 1: | Weekday Peak Hour Turning Movement Count Schedule | 7 |
| Table 2: | Level of Service Description for Intersections | 8 |
| Table 3: | Existing (2020) LOS Results | 9 |
| Table 4: | No-Build (2024) LOS Results | 14 |
| Table 5: | Trip Generation Rates | 17 |
| Table 6: | Build (2024) LOS Results | 22 |
| Table 7: | Summary LOS Table | 26 |


# Figures


| Figure No. | Description | Page |
|---|---|---|
| Figure 1: | Vicinity Map | 2 |
| Figure 2: | Conceptual Site Plan | 3 |
| Figure 3: | Existing (2020) Lane Geometrics and Traffic Control | 6 |
| Figure 4: | Existing (2020) AM and PM Peak Hour Turning Movement Volumes | 10 |
| Figure 5: | No-Build (2024) AM and PM Peak Hour Turning Movement Volumes | 15 |
| Figure 6: | Background (2024) Lane Geometrics and Traffic Control | 16 |
| Figure 7: | Peak Hour Directional Distribution Percentages | 19 |
| Figure 8: | Total AM and PM Peak Hour Site Trips | 20 |
| Figure 9: | Build (2024) AM and PM Peak Hour Turning Movement Volumes | 23 |
| Figure 10: | Future (2024) Lane Configurations and Traffic Control | 27 |

# 1

# Introduction

There are plans to construct the proposed Hackney Tract Subdivision on the north side of Olive Chapel Road, east of the newly completed Richardson Road, in Apex, NC (Figure 1). The proposed Hackney Tract Subdivision is planned to consist of up to 100 single-family and 133 multi-family townhomes with full build-out expected in 2024.

As shown on the conceptual site plan (Figure 2), the development will be accessed through one full movement access along Olive Chapel Road:

- Access #1: full movement access on Olive Chapel Road, approximately 2,500 feet east of Richardson Road

In addition, access will be provided via Hasse Avenue extension to the north to Richardson Road, and cross-connections will be provided via local street extensions to the west to Smith Farm.

Based on the agreement with the Town of Apex and NCDOT (Appendix A), the following existing and future intersections were included in the study and analyzed under the AM and PM peak hour conditions:

- SR 1160 (Olive Chapel Road) and SR 1145 (Richardson Road) (unsignalized/future signalized)
- SR 1160 (Olive Chapel Road) and SR 1162 (Apex Barbecue Road) (unsignalized)
- Richardson Road and Hasse Avenue (unsignalized)
- US Highway 64 East at Richardson Road (unsignalized/future signalized)
- US Highway 64 West at U-turn east of Richardson Road (unsignalized/future signalized)
- SR 1160 (Olive Chapel Road) and Future Access #1/Hasse Avenue Extension (full movement access)

VHB Engineering NC, P.C. (VHB) is contracted with the development team to analyze the potential traffic impacts of the proposed development and to identify any necessary roadway improvements. This Traffic Impact Analysis (TIA) summarizes trip generation, distribution, traffic assignment, and traffic analyses for the proposed development. The Memorandum of Understanding, which summarizes the assumptions for the study is included in Appendix A.

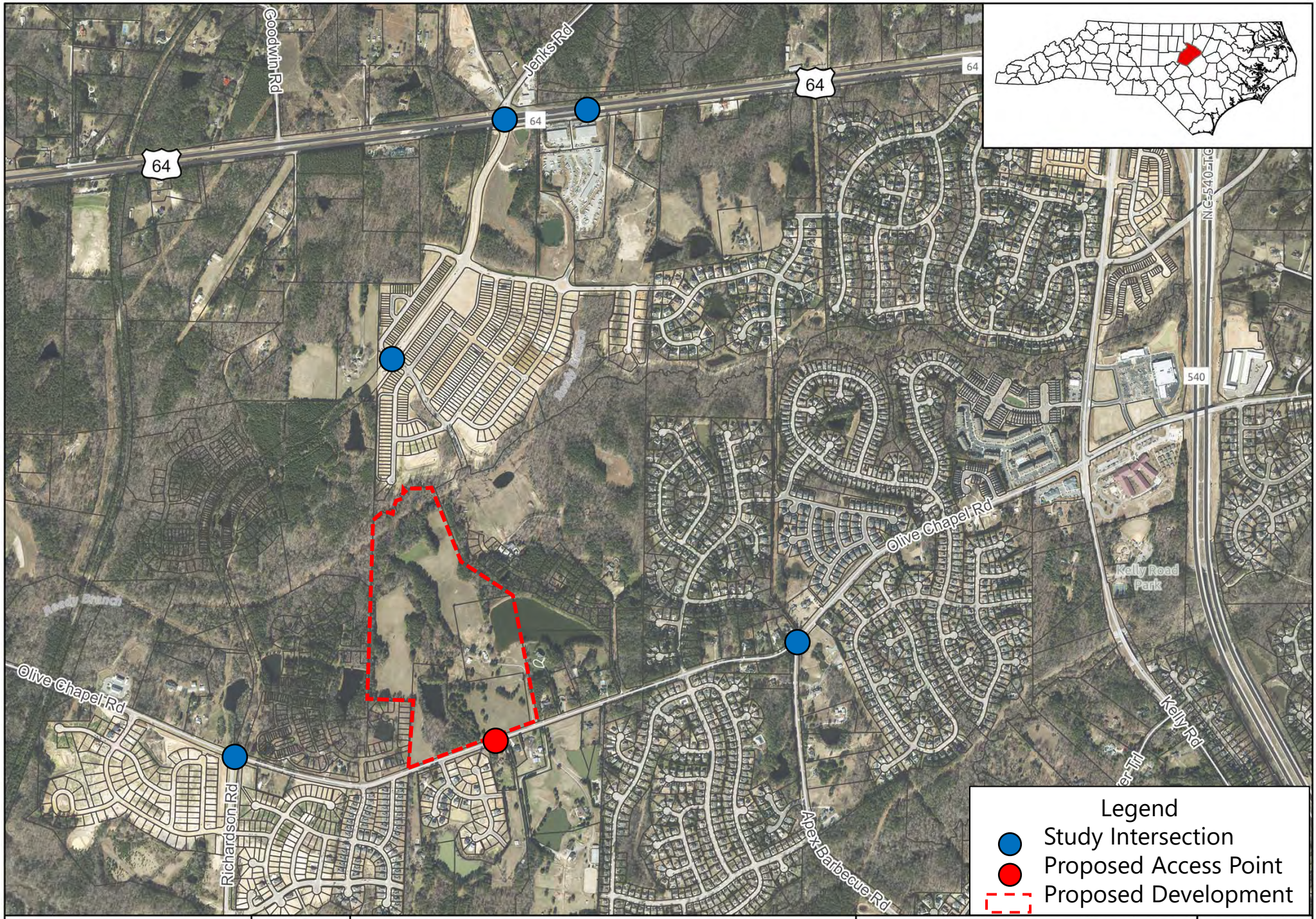


Figure 1:
Vicinity Map



Hackney Tract Subdivision
Traffic Impact Analysis
Apex, NC




WithersRavenel
Engineers | Planners | Surveyors

115 MacKenan Drive | Cary, NC 27511 | t: 919.469.3340 | license #: C-0832 | www.withersravenel.com

# HACKNEY TRACT SUBDIVISION

APEX, NORTH CAROLINA

# OVERALL SUBDIVISION PLAN

| Job No. | 02180517.20 | Drawn By | WR |
|---|---|---|---|
| Date | 10/19/20 | Designer | WR |

**PRELIMINARY**
NOT APPROVED FOR CONSTRUCTION

Revisions

Sheet No.
1.0

K:\18\18-0510\180517.10-Pulte-Hackney Tract\CAD\Drawing Sets\Preliminary\1.0 SUBDIVISION PLAN.dwg- Tuesday, October 20, 2020 1:12:52 PM - INGE, BRYANT

# 2

# Existing (2020) Conditions

## Existing Roadway Conditions

This section describes the existing roadways in the vicinity of the proposed development. Annual Average Daily Traffic (AADT) data for the surrounding network of roadway were obtained from the North Carolina Department of Transportation (NCDOT). The most recent AADT counts from the NCDOT are for 2019 on the study area roadways.

### Olive Chapel Road (SR 1160)

- Olive Chapel Road is a two-lane undivided road within the study area. The posted speed limit along this roadway is 45 miles per hour (mph).
- As shown on the Town of Apex Thoroughfare and Collector Street Plan (last amended October 2020), Olive Chapel Road is planned to be widened to a 4-lane thoroughfare with median across the study area.
- The 2019 NCDOT AADT along Olive Chapel Road was 2,500 vehicles per day (vpd) between New Hill Olive Chapel Road and Kelly Road.

### Richardson Road (SR 1145)

- Richardson Road is a new two-lane median divided roadway connecting US Highway 64 and Olive Chapel Road within the study area. The posted speed limit along this roadway is 45 mph.
- As shown on the Town of Apex Thoroughfare and Collector Street Plan, Richardson Road is planned to be widened to a 4-lane thoroughfare with median across the study area.
- The 2019 AADT along Richard Road was 810 vpd south of Olive Chapel Road. No AADT information is available for Richardson Road between Olive Chapel Road and US 64.

### Apex Barbecue Road (SR 1162)

- Apex Barbecue Road is a two-lane undivided roadway south of the project site within the study area. The posted speed limit along this roadway is 45 mph.
- As shown on the Town of Apex Thoroughfare and Collector Street Plan, Apex Barbeque Road is planned to be widened to a 3-lane thoroughfare with intersection realignment planned at Olive Chapel Road.
- The 2019 NCDOT AADT along Apex Barbeque Road was 4,500 vpd between Kelly Road and Olive Chapel Road.

### US Highway 64 (US 64)

- US Highway 64 is a four-lane median divided highway with partial control of access within the study area. The posted speed limit along US 64 is 55 mph.
- As shown on the Town of Apex Thoroughfare and Collector Street Plan, US Highway 64 is planned to be a freeway facility with full control of access, and a future interchange is planned along US 64 with Richardson Road/Jenks Road.
- The 2019 NCDOT AADT along US 64 was 27,000 vpd between New Hill Road and Kelly Road.

### Hasse Avenue

- Hasse Avenue is a two-lane undivided local road within the study area. No posted speed limit was observed along Hasse Avenue.
- As shown on the Town of Apex Thoroughfare and Collector Street Plan, Hasse Avenue is planned to be extended to a two-lane major collector street between Richardson Road and Olive Chapel Road.
- No AADT information is available for Hasse Avenue within the study area.

Figure 3 provides a schematic diagram of the roadways near the proposed development including the existing intersection geometrics.

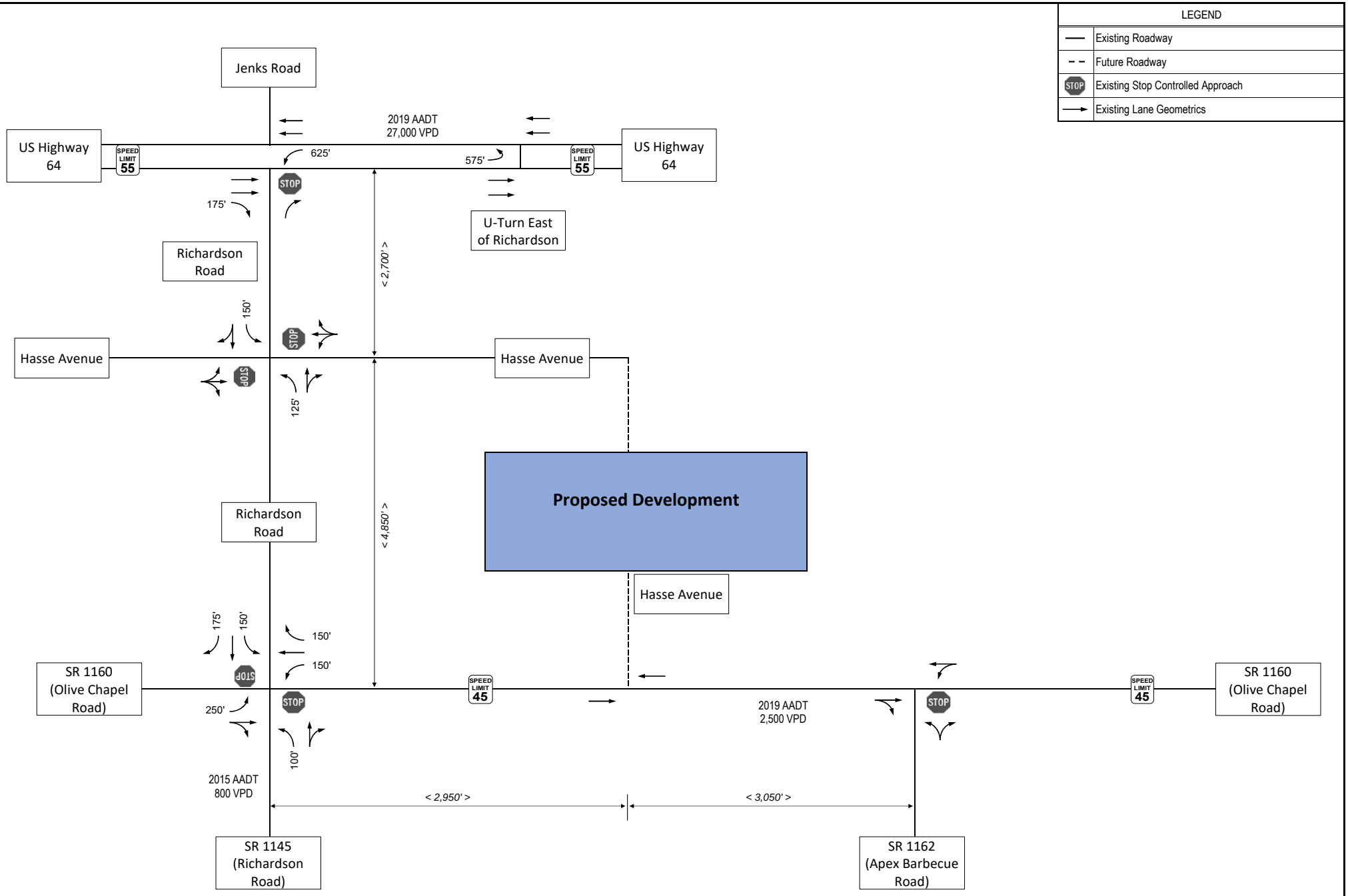


vhb

**Existing (2020) Lane[illegible] and Traffic Control**



**Hackney Tract Subdivision**
**Apex, NC**

## Existing Turning Movement Data

VHB Engineering NC, P.C. collected the intersection turning movement counts analyzed in this TIA in November 2020. Traffic data were collected during typical AM (7:00 – 9:00 AM) and PM (4:00 – 6:00 PM) peak periods while schools were partially open due to the COVID-19 pandemic restrictions. Table 1 summarizes the schedule used to obtain the turning movement data. A detailed summary of the traffic counts can be found in Appendix B.

**Table 1: Weekday Peak Hour Turning Movement Count Schedule**

| Intersection | Time Period | Data Collection Date |
|---|---|---|
| Olive Chapel Road and Richardson Road | 7:00 AM – 9:00 AM<br>4:00 PM – 6:00 PM | Thursday<br>November 5, 2020 |
| Richardson Road and Hasse Avenue/Little Gem Lane | 7:00 AM – 9:00 AM<br>4:00 PM – 6:00 PM | Thursday<br>November 5, 2020 |
| US Highway 64 and Richardson Road | 7:00 AM – 9:00 AM<br>4:00 PM – 6:00 PM | Thursday<br>November 5, 2020 |
| US Highway 64 and U-Turn East of Richardson Road | 7:00 AM – 9:00 AM<br>4:00 PM – 6:00 PM | Thursday<br>November 5, 2020 |
| Olive Chapel Road and Apex Barbecue Road | 7:00 AM – 9:00 AM<br>4:00 PM – 6:00 PM | Thursday<br>November 5, 2020 |

The existing peak hour turning movement volumes are shown in Figure 4.

## Level of Service Criteria

Peak hour level of service (LOS) measures the adequacy of the intersection geometrics and traffic controls of a particular intersection or approach for the given turning volumes. Levels of service range from A through F, based on the average control delay experienced by vehicles traveling through the intersection during the peak hour. Control delay represents the portion of total delay attributed to traffic control devices (e.g., signals or stop signs). Table 2 provides a general description of various levels of service categories and delay ranges.

**Table 2: Level of Service Standard for Intersections**

| Level of Service | Signalized Intersection | Unsignalized Intersection |
|---|---|---|
| A | <= 10 sec. | <= 10 sec. |
| B | 10-20 sec. | 10-15 sec. |
| C | 20-35 sec. | 15-25 sec. |
| D | 35-55 sec. | 25-35 sec. |
| E | 55-80 sec. | 35-50 sec. |
| F | > 80 sec. | > 50 sec. |

The engineering profession generally accepts LOS D as an acceptable operating condition for signalized intersections. Based on the Policy on Street and Driveway Access to North Carolina Highways (NCDOT Driveway Manual) and the Town of Apex Unified Development Ordinance (UDO), geometric and/or traffic control improvements should be identified at signalized intersections to prevent the traffic generated by the proposed development from causing any intersection or roadway approach to fall below LOS D. For intersections projected to operate worse than LOS D under the background conditions, improvements should be identified to minimize the increase in average overall intersection delay when site traffic accounts for at least 10% of the projected total peak hour traffic at the intersections.

At unsignalized intersections, stop-controlled minor street approaches may exceed LOS D provided the addition of development traffic is not anticipated to warrant a traffic signal upon build-out and the resulting congestion does not block traffic movements at adjacent intersections. Guidelines provided by NCDOT shall be used in the evaluation of the need for and length of exclusive right and/or left turn lanes to support development traffic; for any and all turning movements where the development is anticipated to add at least 10% to the existing peak hour traffic volume, improvements may be required to mitigate the impact of development traffic on turn lane storage requirements.

## Level of Service Analysis

Intersection levels of service analyses were performed for the typical weekday AM and PM peak hours using *Synchro/SimTraffic Professional Version 10.* A summary of the findings for the Existing (2020) scenario LOS analysis can be found in Table 3 and the full *Synchro/HCS* output can be found in Appendix D.

As reported in Table 3, all of the stop- and yield-controlled approaches in the study area are operating at acceptable levels of service (i.e., LOS D or better) during both the AM and PM peak hours under the Existing (2020) conditions, with an exception that the southbound approach of Richardson Road (westbound left-turn of US 64) at US 64 Eastbound operates at LOS F during both peak hours.

**Table 3: Existing (2020) LOS Results**

| Intersection and Approach | Control | Existing (2020) | |
|---|---|---|---|
| | | AM | PM |
| **Richardson Rd and Olive Chapel Rd** | TWSC | - | - |
| Northbound | | B-11.9 | B-14.1 |
| Southbound | | B-11.7 | C-15.5 |
| **Apex Barbecue Rd and Olive Chapel Rd** | TWSC | - | - |
| Northbound | | B-11.8 | C-19.5 |
| **Richardson Rd and Little Gem Ln/Hasse Ave** | TWSC | - | - |
| Eastbound | | A-9.8 | B-10.2 |
| Westbound | | A-9.7 | A-9.9 |
| **Richardson Rd/WB Left-Over and US 64** | TWSC | - | - |
| Northbound | | C-23.5 | C-23.3 |
| Southbound | | F-66.0 | F-216.7 |
| **U-Turn East of Richardson Rd and US 64** | TWSC | - | - |
| Northbound | | B-14.2 | C-18.2 |

LEGEND: **X (XX)** = Overall intersection LOS (intersection delay in sec/veh);

X - XX = approach LOS – approach delay in sec/veh

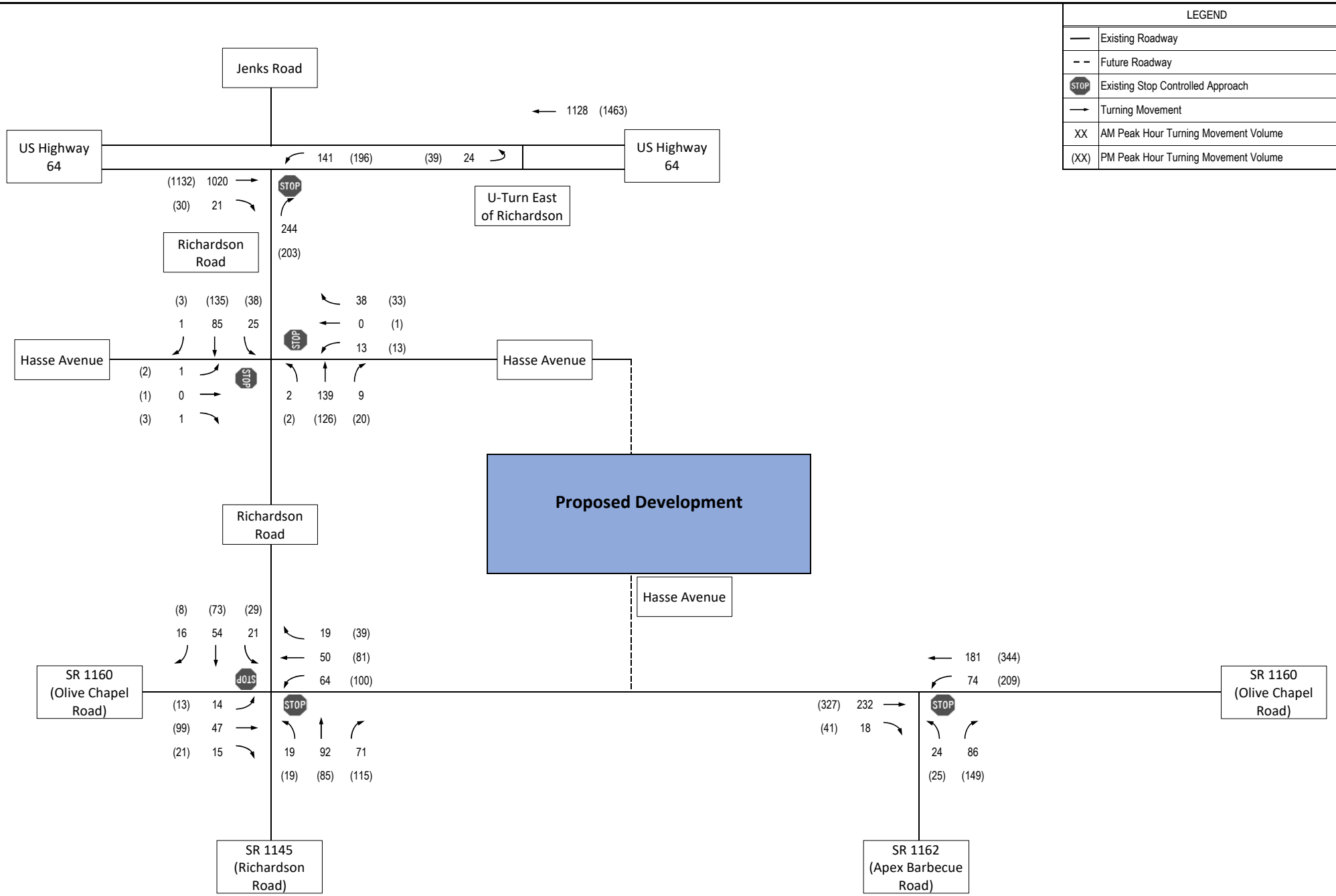


**Existing (2020) AM and PM Turning Movement Volumes**



**Hackney Tract Subdivision**
**Apex, NC**

# 3

# No-Build (2024) Conditions

## Background Growth and Development

Based on discussions with the Town of Apex and NCDOT, an annual growth rate of three percent (3%) was applied to the existing traffic to account for the growth between the base year (2020) and the future analysis year (2024). In addition, site trips from seven (7) adjacent developments that are expected to occur before the analysis year were incorporated into the analysis.

*Saddlebrook (Lawrence Assemblage/Richardson West)* – Located in the southwest corner of the Olive Chapel Road and Richardson Road intersection, this residential development is proposed to consist of 104 single-family homes and be constructed by 2017. A traffic analysis report was prepared by Ramey Kemp & Associates and submitted to the Town on November 3, 2014. As detailed in the report, the development is projected to generate 1,090 daily site trips, with 83 trips (21 entering, 62 exiting) occurring in the AM peak hour and 109 trips (69 entering, 40 exiting) occurring in the PM peak hour. These trips were distributed to the study area based on the assumed distribution patterns in the report. Field visits indicate that construction has begun but has not been completed; therefore, a percentage of traffic associated with the development was included in the No-Build (2024) analysis.

*Sweetwater* – Located on US 64 in Wake County, this mixed-use development is projected to consist of 375 single-family homes, 60 condominiums, 50,000 sf of office, 200,000 sf of retail, 7,000 sf of high-turnover restaurant, 3,000 sf of fast food with drive through window, and a drive-in bank with 4 lanes and be constructed by 2019. A TIA was prepared by Ramey Kemp & Associates and submitted on December 18, 2014. As detailed in the report the development is projected to generate 18,360 daily site trips, with 914 trips (457 entering, 457 exiting) occurring in the AM peak hour and 1,736 trips (865 entering, 871 exiting) occurring in the PM peak hour. These trips were distributed to the study area based on the assumed distribution patterns in the report. Field visits indicate that approximately 80% of the residential and 0% of the mixed-use phases have been constructed; therefore, a percentage of traffic associated with the development was included in the No-Build (2024) analysis.

*Buckhorn Preserve (Goodwin-MacNair)* – Located on the east side of Richardson Road, just north of M. Zion Church Road, this residential development is projected to consist of 347 single-family homes and be constructed by 2020. A TIA was prepared by VHB

and submitted to the Town on June 26, 2015, with an addendum submitted on August 3, 2015. As detailed in the report, the development is projected to generate 3,299 daily site trips, with 253 trips (63 entering, 190 exiting) occurring in the AM peak hour and 322 trips (203 entering, 119 exiting) occurring in the PM peak hour. These trips were distributed to the study area based on the assumed distribution patterns in the report. Field visits indicate that the development has not been fully constructed; therefore, a percentage of the traffic associated with the development was included in the No-Build (2024) analysis.

*Stillwater (Womble)* – Located between Ragan Road and Richardson Road north of Humie Olive Road, this residential development is projected to consist of 303 single-family homes and be constructed by 2018. A TIA was prepared by Stantec and submitted to the Town on February 27, 2014. As detailed in the report, the development is projected to generate 2,912 daily site trips, with 221 trips (55 entering, 166 exiting) occurring in the AM peak hour and 285 trips (180 entering, 105 exiting) occurring in the PM peak hour. These trips were distributed to the study area based on the assumed distribution patterns in the report. Field visits indicated that the development has not been fully constructed; therefore, a percentage of the traffic associated with the development was included in the No-Build (2024) analysis.

*Westford* – Located on the north side of US 64 and east of Jenks Road, this residential development is projected to consist of 300 apartment units, 225 townhomes, and 90 single-family homes and be constructed by 2019. A TIA was prepared by Kimley-Horn and submitted to the Town on December 7, 2016. As detailed in the report, the development is projected to generate 4,188 daily site trips, with 323 trips (65 entering, 258 exiting) occurring in the AM peak hour and 396 trips (257 entering, 139 exiting) occurring in the PM peak hour. These trips were distributed to the study area based on the assumed distribution patterns in the report. Field visits indicated that the development has not been fully constructed; therefore, a percentage of the traffic associated with the development was included in the No-Build (2024) analysis.

*Smith Farm* – Located north of Olive Chapel Road, west of Kelly Road, and south of US 64, this mixed-use development is projected to consist of 430 single-family homes, 170 townhomes, 150 apartments, 100,000 sf of office, 150,000 sf of retail, 10,000 sf of pharmacy, 16,000 sf of high-turnover sit-down restaurant, 9,000 sf of fast-food restaurant, 12,000 sf of drive-in bank, and a gas station with 8 fueling positions and be constructed by 2021. A TIA was prepared by Ramey Kemp & Associates and submitted to the Town on November 24, 2015. As detailed in the report, the development is projected to generate 27,930 daily site trips, with 1,709 trips (847 entering, 862 exiting) occurring in the AM peak hour and 2,545 trips (1,301 entering, 1,244 exiting) occurring in the PM peak hour. These trips were distributed to the study area based on the assumed distribution patterns in the report. Field visits indicated that the development has not been fully constructed; therefore, a percentage of the traffic associated with the development was included in the No-Build (2024) analysis.

*Linden (Pricewood Assemblage)* – Located in the northwest quadrant of the intersection of Olive Chapel Road and Pricewood Lane, this residential development is projected to consist of 211 single-family homes and be constructed by 2022. A TIA was prepared by Ramey Kemp & Associates and submitted to the Town on August 31, 2016. As detailed in the report, the development is projected to generate 2,010 daily site trips, with 158 trips (40 entering, 118 exiting) occurring in the AM peak hour and 211 trips (133 entering, 78 exiting) occurring in the PM peak hour. These trips were distributed to the study area based on the assumed distribution patterns in the report. Field visits indicated that the development has not been fully constructed; therefore, a percentage of the traffic associated with the development was included in the No-Build (2024) analysis.

As for transportation improvements, mitigation requirements associated with Sweetwater are expected to include two new signals and additional turn lanes along US 64 at the Richardson Road and U-Turn East of Richardson Road intersections, and Smith Farm is committed to installing a new signal at the Olive Chapel Road and Richardson Road intersection once it is warranted.

Note that although significant traffic increases are expected due to the inclusion of background developments, an undiscounted annual traffic growth rate of three percent (3%) was applied to offset the impacts on traffic data collected under the Existing (2020) conditions with COVID-19 pandemic restrictions in place. The No-Build (2024) AM and PM peak hour volumes are shown in Figure 5.

## Level of Service Analysis

Intersection levels of service analyses were performed for the typical weekday AM and PM peak hours using *Synchro/SimTraffic Professional Version 10*. A summary of the findings for the No-Build (2024) scenario LOS analysis can be found in Table 4. The full *Synchro/HCS* output for the No-Build scenario can be found in Appendix D.

As reported in Table 4, the study area is projected to experience traffic and delay increases, but the impacts will be substantially mitigated by the background transportation improvements. As a result, all of the signalized intersections and stop-controlled approaches in the study area are projected to operate at acceptable levels of service except that the stop-controlled northbound approach of Apex Barbecue Road at Olive Chapel Road is projected to decline to operate at LOS F in the PM peak hour.

**Table 4: No-Build (2024) LOS Results**

| Intersection and Approach | Control | No-Build (2024) | |
|---|---|---|---|
| | | AM | PM |
| **Richardson Rd and Olive Chapel Rd** | Signal | **A (9.7)** | **B (11.8)** |
| Eastbound | | A-9.7 | B-10.7 |
| Westbound | | B-10.3 | B-12.0 |
| Northbound | | B-10.2 | B-12.7 |
| Southbound | | A-8.4 | B-11.5 |
| **Apex Barbecue Rd and Olive Chapel Rd** | TWSC | - | - |
| Northbound | | C-16.8 | F-92.5 |
| **Richardson Rd and Little Gem Ln/Hasse Ave** | TWSC | - | - |
| Eastbound | | C-16.5 | C-21.8 |
| Westbound | | C-15.1 | C-19.1 |
| **Richardson Rd/WB Left-Over and US 64** | Signal | **C (20.7)** | **D (42.0)** |
| Eastbound | | C-20.7 | D-51.3 |
| Northbound | | C-28.2 | D-47.4 |
| Southbound | | B-10.9 | B-19.6 |
| **U-Turn East of Richardson Rd and US 64** | Signal | **B (11.8)** | **C (27.6)** |
| Westbound | | A-9.6 | C-20.5 |
| Northbound | | C-27.8 | E-59.9 |

LEGEND: **X (XX)** = Overall intersection LOS (intersection delay in sec/veh);

X - XX = approach LOS – approach delay in sec/veh

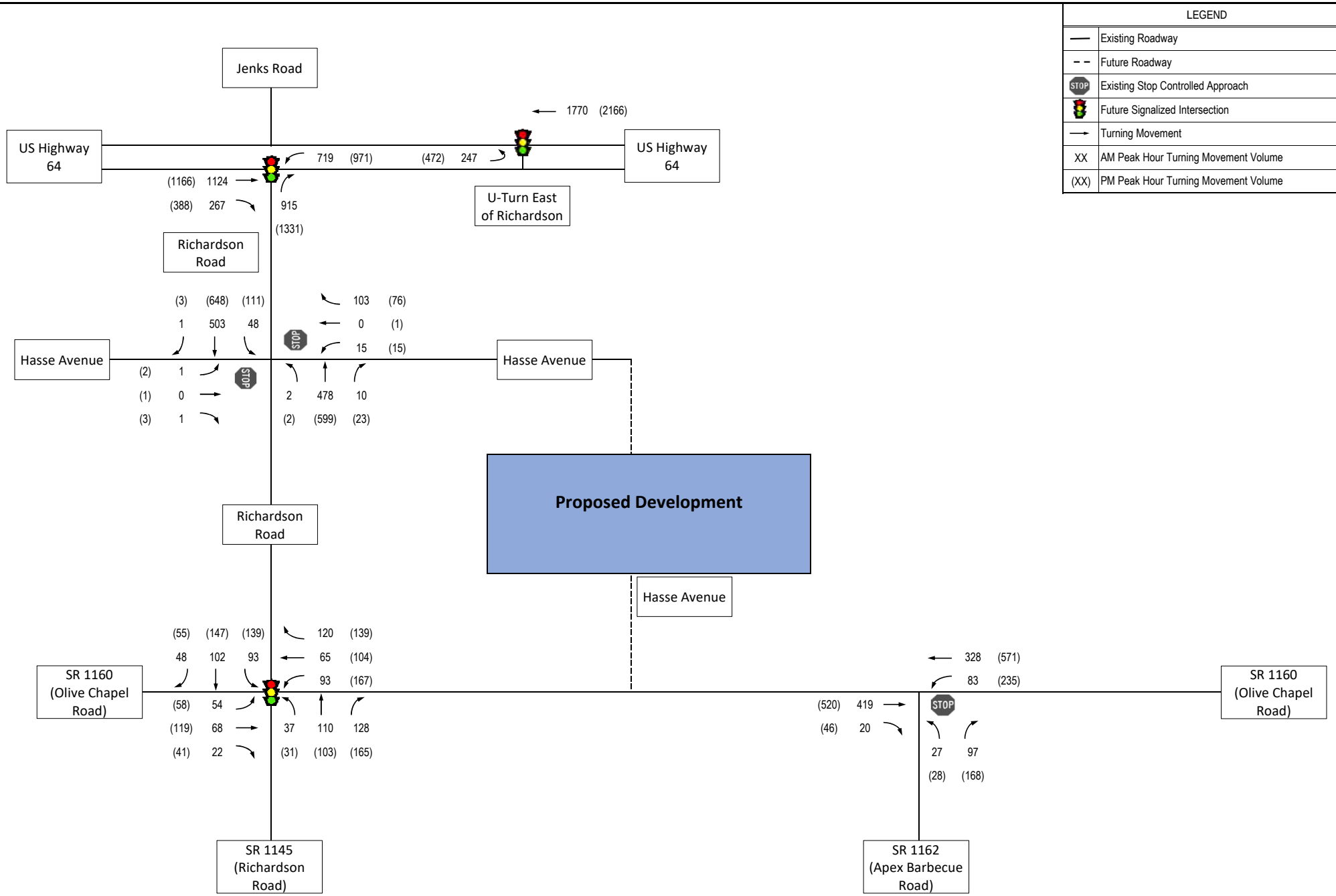


vhb

**No-Build (2024) AM and PM Turning Movement Volumes**



**Hackney Tract Subdivision**
**Apex, NC**

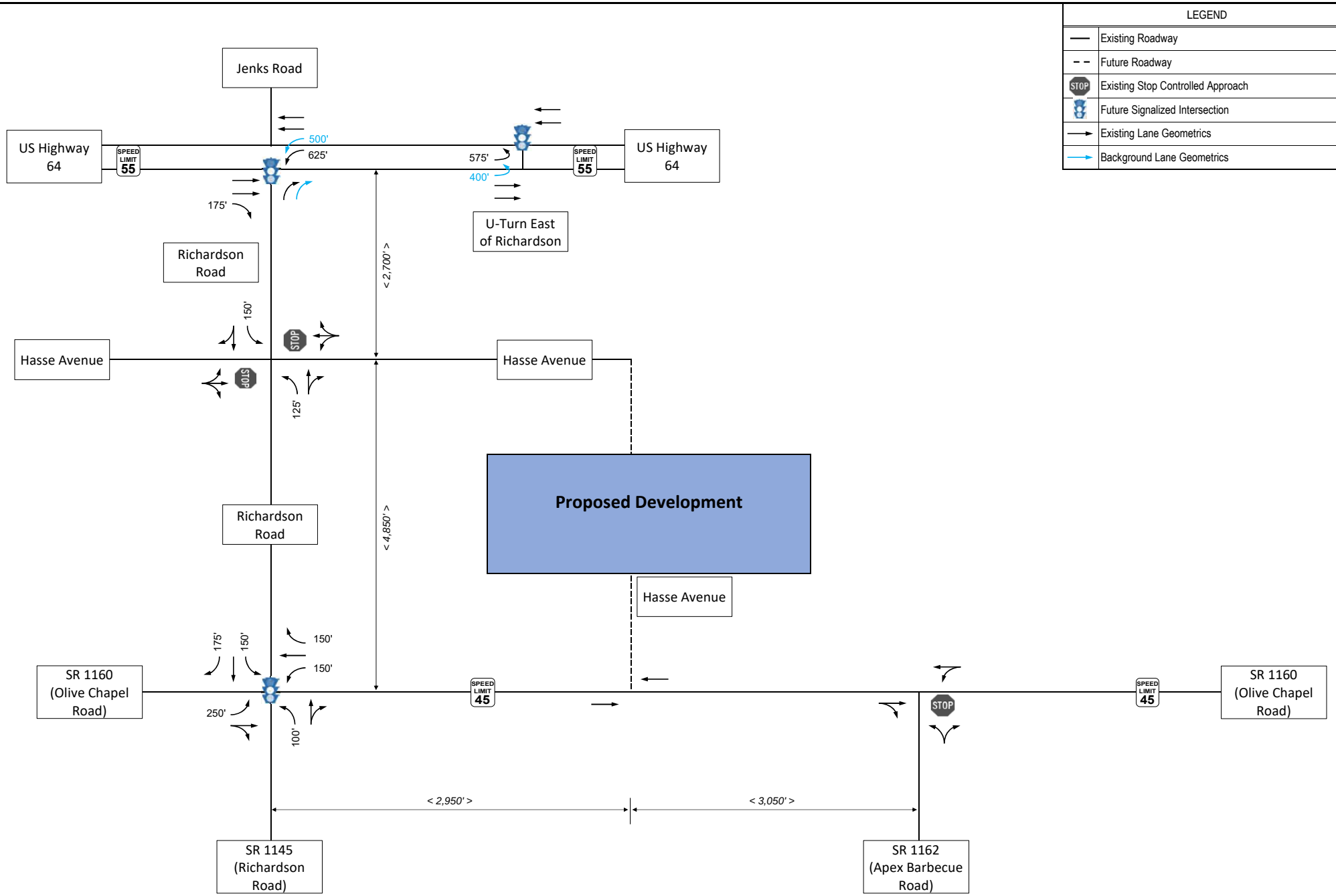




**Background (2024) La… …cs and Traffic Control**

**Hackney Tract Subdivision**
**Apex, NC**

# 4

# Build (2024) Conditions

There are plans to construct the proposed Hackney Tract Subdivision on the north side of Olive Chapel Road, east of the newly completed Richardson Road, in Apex, NC (Figure 1). The proposed Hackney Tract Subdivision is planned to consist of up to 100 single-family and 133 multi-family townhomes with full build-out expected in 2024.

## Trip Generation

Trip generation was conducted based on the most appropriate corresponding trip generation codes included in the *ITE Trip Generation Manual, 10th Edition* and the suggested method of calculation in the NCDOT's *"Rate vs. Equation" Spreadsheet*. To provide a conservative analysis, no transit, walking, or bicycling reductions will be applied.

Table 5 summarizes the estimated trip generation for the proposed Hackney Tract Subdivision for weekday AM and PM peak hours.

**Table 5: Trip Generation Rates**

| Land Use Code | Land Use | Unit | ADT | AM Peak Hour | | | PM Peak Hour | | |
|---|---|---|---|---|---|---|---|---|---|
| | | | | Enter | Exit | Total | Enter | Exit | Total |
| 210 | Single-Family Detached Housing | 100 du | 1,040 | 19 | 57 | 76 | 64 | 38 | 102 |
| 220 | Multi-Family Housing (Low-Rise) | 133 du | 965 | 14 | 49 | 63 | 48 | 28 | 76 |
| *Development Total* | | | *2,005* | *33* | *106* | *139* | *112* | *66* | *178* |

In total, the proposed Hackney Tract Subdivision is projected to generate 2,005 daily trips with 139 trips (33 entering, 106 exiting) occurring in the AM peak hour and 178 trips (112 entering, 66 exiting) occurring the PM peak hour.

## Traffic Distribution and Assignment

As shown on the conceptual site plan (Figure 2), the development will be accessed through one full movement access along Olive Chapel Road:

- Access #1: full movement access on Olive Chapel Road, approximately 2,500 feet east of Richardson Road

In addition, access will be provided via Hasse Avenue extension to the north to Richardson Road, and cross-connections will be provided via local street extensions to the west to Smith Farm. Potential traffic reductions due to cross-connections are not accounted for in this TIA to be conservative.

Based on agreements with the Town of Apex and NCDOT through the Memorandum of Understanding (Appendix A), the directional distribution percentages are as follows:

- from/to the east via US Highway 64 – 50%
- from/to the west via US Highway 64 – 10%
- from/to the east via Olive Chapel Road – 25%
- from/to the west via Olive Chapel Road – 5%
- from/to the south via Richardson Road – 8%
- from/to the south via Apex Barbecue Road – 2%

A graphic illustration of the proposed peak hour directional distribution percentages is shown in Figure 7, with the resulting site trips shown in Figure 8.

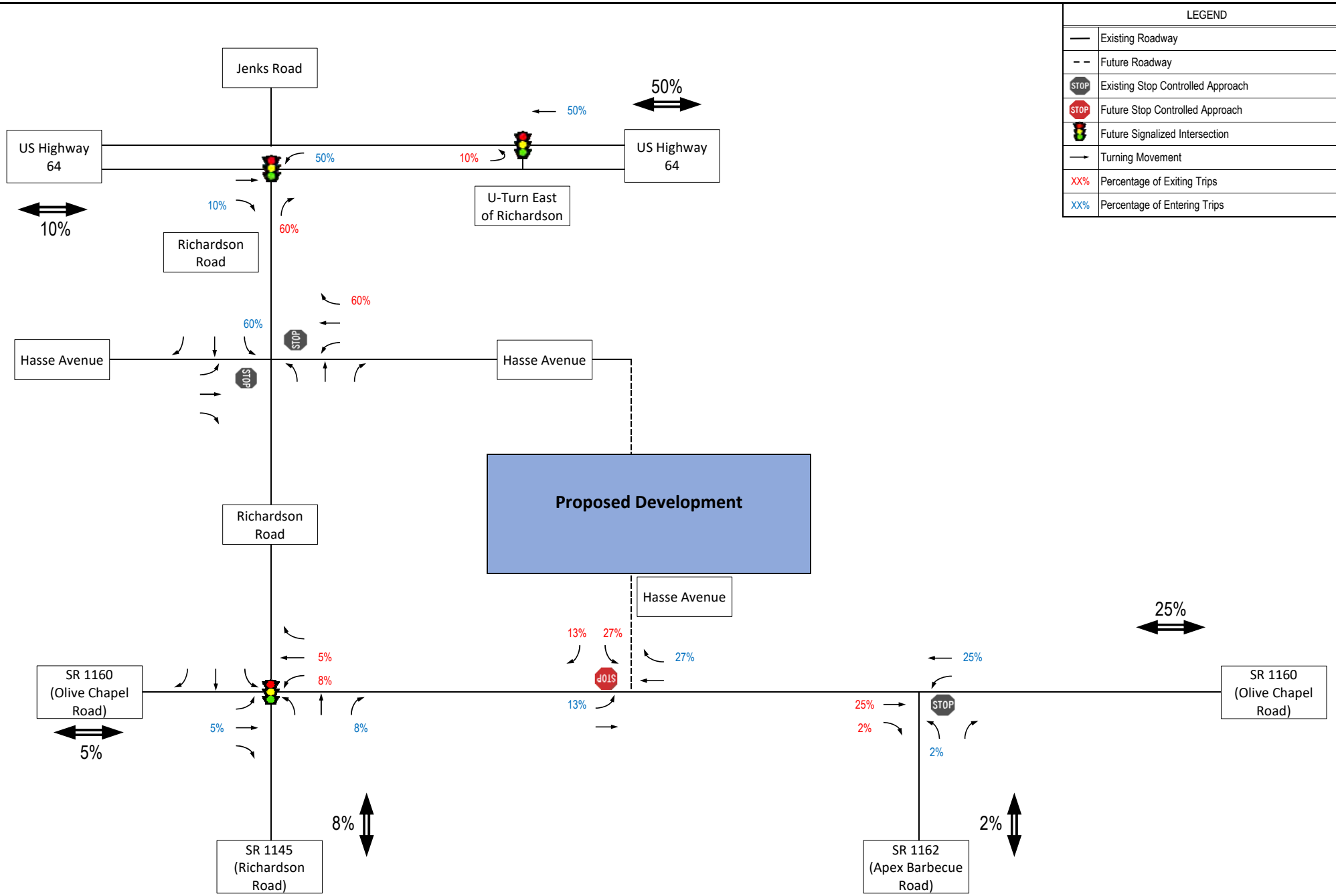


**Peak Hour Site Trip Di[illegible]signment Percentages**



**Hackney Tract Subdivision**
**Apex, NC**

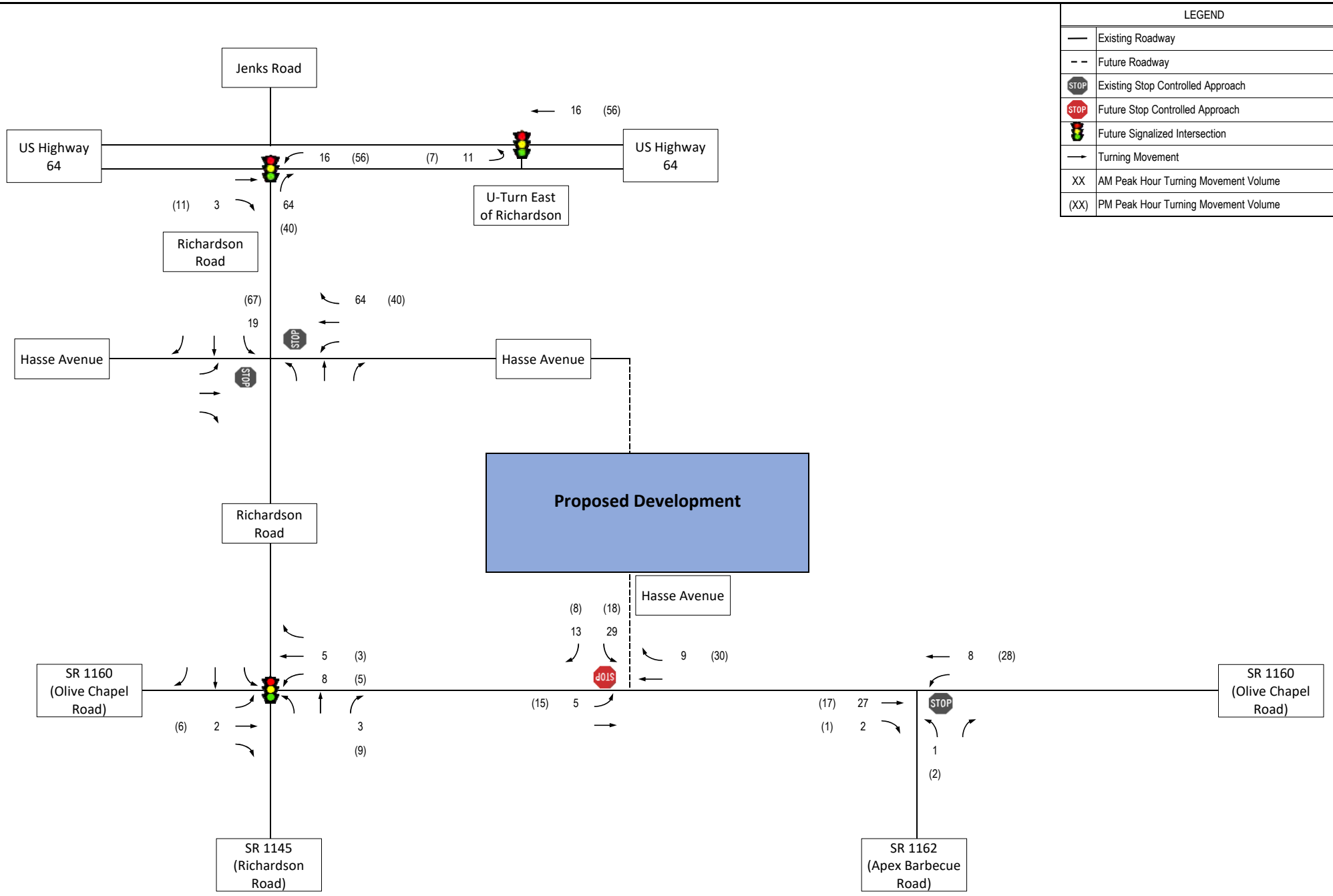




**AM and PM Site Trips**

**Hackney Tract Subdivision**
**Apex, NC**

## Level of Service Analysis

The Build (2024) analysis scenario includes the No-Build (2024) traffic as well as site-generated trips from the proposed development. Figure 9 depicts the turning movement volumes used in the Build (2024) scenario analysis.

Intersection levels of service analyses were performed for the typical weekday AM and PM peak hours using *Synchro/SimTraffic Professional Version 10*. Table 6 summarizes the LOS results for the Build (2024) scenario and Appendix D contains the full *Synchro/HCS* reports of the analysis.

As reported in Table 6, the stop-controlled northbound approach of Apex Barbeque Road at Olive Chapel Road is projected to continue to operate at failing levels of services in the PM peak hour with delay increases. The rest of the intersections included in the study area are projected to continue operating at acceptable levels of service during both peak hours. The planned stop-controlled Future Access #1 is projected to operate at LOS C in the AM peak hour and LOS D in the PM peak hour.

**Table 6: Build (2024) LOS Results**

| Intersection and Approach | Control | Build (2024) | |
|---|---|---|---|
| | | AM | PM |
| **Richardson Rd and Olive Chapel Rd** | Signal | **A (9.8)** | **B (12.0)** |
| Eastbound | | A-9.8 | B-10.9 |
| Westbound | | B-10.5 | B-12.2 |
| Northbound | | B-10.3 | B-13.0 |
| Southbound | | A-8.5 | B-11.6 |
| **Apex Barbecue Rd and Olive Chapel Rd** | TWSC | - | - |
| Northbound | | C-17.9 | F-134.5 |
| **Richardson Rd and Little Gem Ln/Hasse Ave** | TWSC | - | - |
| Eastbound | | C-19.1 | D-32.0 |
| Westbound | | C-17.0 | C-21.9 |
| **Richardson Rd/WB Left-Over and US 64** | Signal | **C (22.0)** | **D (44.5)** |
| Eastbound | | C-23.7 | E-56.0 |
| Northbound | | C-28.5 | D-50.1 |
| Southbound | | A-9.8 | B-19.5 |
| **U-Turn East of Richardson Rd and US 64** | Signal | **B (12.5)** | **C (30.9)** |
| Westbound | | B-10.5 | C-24.1 |
| Northbound | | C-26.5 | E-62.1 |
| **Olive Chapel Rd & Hasse Ave/Future Access #1** | TWSC | - | - |
| Southbound | | C-16.1 | D-25.0 |

LEGEND: **X (XX)** = Overall intersection LOS (intersection delay in sec/veh);

X - XX = approach LOS – approach delay in sec/veh

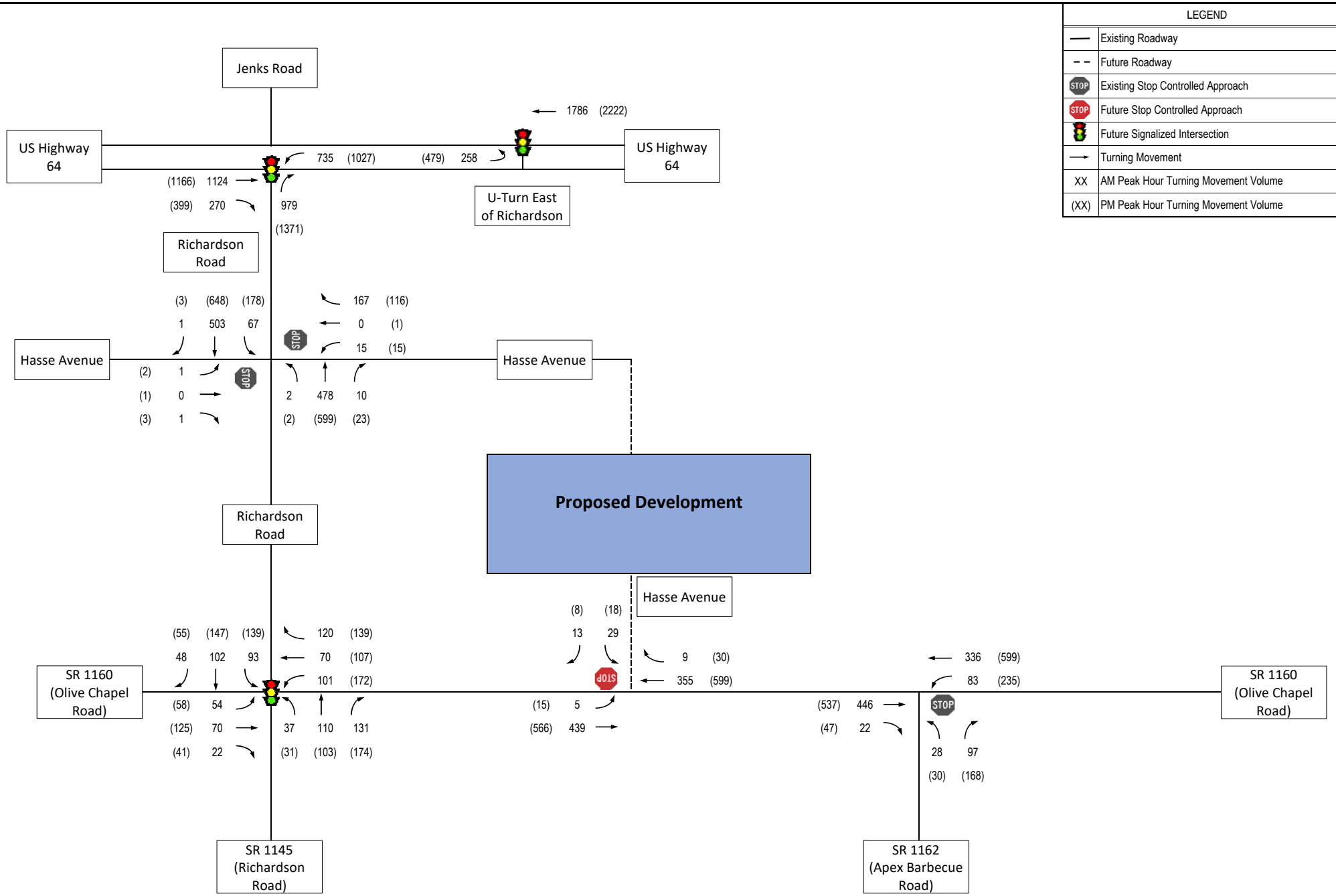


Build (2024) AM and PM P... rning Movement Volumes

Hackney Tract Subdivision
Apex, NC

# 5

# Findings and Conclusions

As indicated in the traffic operations analyses, the proposed Hackney Tract Subdivision is projected to have minimum impacts on traffic operations of the surrounding roadway network and intersections. Nevertheless, the following roadway improvements are recommended to improve traffic operations and safety:

*SR 1160 (Olive Chapel Road) and Future Access #1/Hasse Avenue Extension (unsignalized, full movement)*

Future Access #1 is projected to operate at acceptable levels of service during the AM and PM peak hour with a two-lane cross-section. Although traffic volumes are not projected to automatically warrant turn lanes on Olive Chapel Road, dedicated turn lanes should be provided with the required frontage widening to meet the Town of Apex Comprehensive Transportation Plan standards. Therefore, the following site access configuration and transportation improvements are recommended at this intersection:

- Construct Future Access #1 to consist of one inbound lane and one outbound lane.
- Provide a dedicated left-turn lane on eastbound Olive Chapel Road with 100 feet of storage length and appropriate taper.
- Provide a dedicated right-turn lane on westbound Olive Chapel Road with 100 feet of storage length and appropriate taper.

*SR 1160 (Olive Chapel Road) and SR 1162 (Apex Barbecue Road) (unsignalized)*

Traffic analysis indicated that the northbound approach of Apex Barbecue Road is projected to operate at LOS F in the PM peak hour under the No-Build and Build conditions. The intersection is not anticipated to meet warrants for installing a new traffic signal, while options for adding new turn lanes are limited due to the skewed angle of intersection on a curve of Olive Chapel Road and potential right-of-way/drainage restrictions. As shown on the Apex Comprehensive Transportation Plan, this intersection is identified for future intersection realignment. Since site trips are anticipated to contribute less than 4% traffic increases in the AM and 3% in the PM at this intersection (increases of only 1 VPH in the AM peak hour and 2 VPH in the PM peak on the stop-controlled approach), improvement should not be required by this development based on the Town of Apex UDO. Nevertheless, alternative traffic control method (such as AWSC), if warranted by crash analysis, may be considered

before this intersection is realigned in the future based on the Town of Apex CTP.

The rest of study area intersections are expected to operate acceptably. Therefore, no mitigation is required. A summary of the findings for the analysis scenarios is shown in Table 7, and the resulting future lane configurations and traffic controls in 2024 are shown in Figure 10.

**Table 7: Summary LOS Table**

| Intersection and Approach | Control | Existing (2020) | | No-Build (2024) | | Build (2024) | |
|---|---|---|---|---|---|---|---|
| | | AM | PM | AM | PM | AM | PM |
| **Richardson Rd and Olive Chapel Rd** | TWSC/ Signal | - | - | **A (9.7)** | **B (11.8)** | **A (9.8)** | **B (12.0)** |
| Eastbound | | --- | --- | A-9.7 | B-10.7 | A-9.8 | B-10.9 |
| Westbound | | --- | --- | B-10.3 | B-12.0 | B-10.5 | B-12.2 |
| Northbound | | B-11.9 | B-14.1 | B-10.2 | B-12.7 | B-10.3 | B-13.0 |
| Southbound | | B-11.7 | C-15.5 | A-8.4 | B-11.5 | A-8.5 | B-11.6 |
| **Apex Barbecue Rd and Olive Chapel Rd** | TWSC | - | - | - | - | - | - |
| Northbound | | B-11.8 | C-19.5 | C-16.8 | F-92.5 | C-17.9 | F-134.5 |
| **Richardson Rd and Little Gem Ln/Hasse Ave** | TWSC | - | - | - | - | - | - |
| Eastbound | | A-9.8 | B-10.2 | C-16.5 | C-21.8 | C-19.1 | D-32.0 |
| Westbound | | A-9.7 | A-9.9 | C-15.1 | C-19.1 | C-17.0 | C-21.9 |
| **Richardson Rd/WB Left-Over and US 64** | TWSC/ Signal | - | - | **C (20.7)** | **D (42.0)** | **C (22.0)** | **D (44.5)** |
| Eastbound | | --- | --- | C-20.7 | D-51.3 | C-23.7 | E-56.0 |
| Northbound | | C-23.5 | C-23.3 | C-28.2 | D-47.4 | C-28.5 | D-50.1 |
| Southbound | | F-66.0 | F-216.7 | B-10.9 | B-19.6 | A-9.8 | B-19.5 |
| **U-Turn East of Richardson Rd and US 64** | TWSC/ Signal | - | - | **B (11.8)** | **C (27.6)** | **B (12.5)** | **C (30.9)** |
| Westbound | | --- | --- | A-9.6 | C-20.5 | B-10.5 | C-24.1 |
| Northbound | | B-14.2 | C-18.2 | C-27.8 | E-59.9 | C-26.5 | E-62.1 |
| **Olive Chapel Rd & Hasse Ave/Future Access #1** | TWSC | - | - | - | - | - | - |
| Southbound | | --- | --- | --- | --- | C-16.1 | D-25.0 |

LEGEND: **X (XX)** = Overall intersection LOS (intersection delay in sec/veh);

X - XX = approach LOS – approach delay in sec/veh

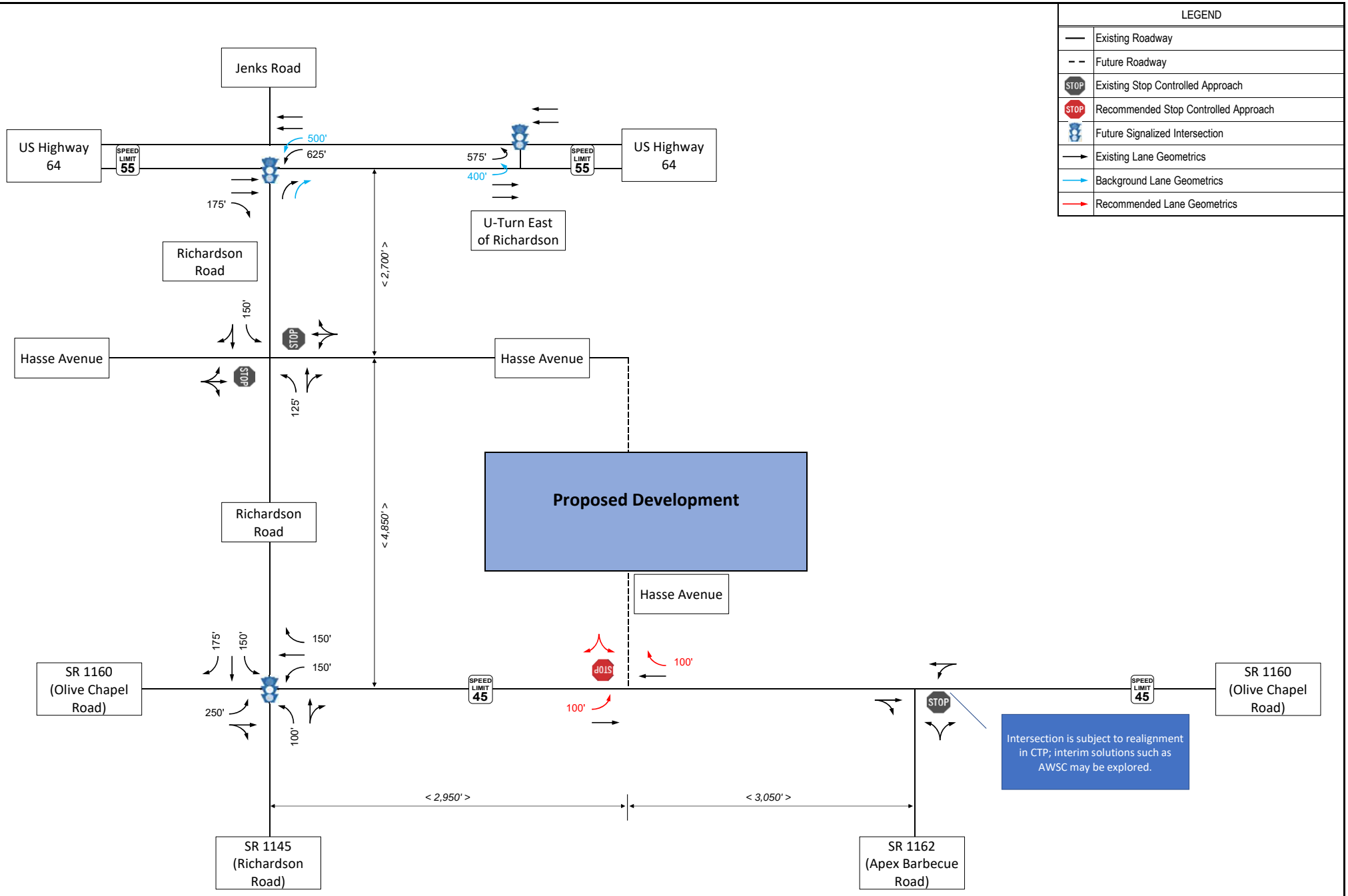


Future (2024) Lane and Traffic Control

Hackney Tract Subdivision
Apex, NC

# APPENDICES

# APPENDIX A:

# Memorandum of Understanding

Memorandum

To: Russell H. Dalton, PE
Public Works & Transportation
Town of Apex
73 Hunter Street
Apex, NC 27502

Date: November 12, 2020

Project #: 38504.25

From: Baohong Wan, PhD, PE
Senior Project Manager

Re: Hackney Tract Subdivision TIA
Memorandum of Understanding

---

This memorandum summarizes the assumptions for a Traffic Impact Analysis (TIA) prepared for the proposed Hackney Tract Subdivision on Olive Chapel Road, west of the newly completed Richardson Road, in Apex, NC. Based on the preliminary plan (attached), the development is to consist of a mix of single-family and multi-family townhome uses:

- 100 single family homes
- 133 townhomes

Access to the development is to be provided primarily through a collector street (Hasse Avenue Extension) planned across the property. In addition, cross-connections will be provided via several street extensions to Smith Farm.

## Study Area

Based on our previous correspondence, the following existing and future study area intersections will be included for analysis under the AM and PM peak hour conditions:

- SR 1160 (Olive Chapel Road) and SR 1145 (Richardson Road) (unsignalized/future signalized)
- SR 1160 (Olive Chapel Road) and SR 1162 (Apex Barbecue Road) (unsignalized)
- Richardson Road and Hasse Avenue (unsignalized)
- US Highway 64 East at Richardson Road (unsignalized/future signalized)
- US Highway 64 West at U-turn east of Richardson Road (unsignalized/future signalized)
- SR 1160 (Olive Chapel Road) and Future Access #1/Hasse Avenue Extension (full movement access)

The signalized intersection of SR 1160 (Olive Chapel Road) and SR 1163 (Kelly Road) was initially considered, but it was excluded from the study area due to its distance from the project site and the fact that this intersection has recently been upgraded with new turn lanes and crosswalks, and traffic is expected to decrease at this intersection due to the newly completed Richardson Road connection.

## Data Collection

As discussed with the Town of Apex and NCDOT, collecting new traffic data was preferred to reflect new traffic patterns with the recently completed Richard Road between Olive Chapel Road and US 64. Turning movement data at the study intersections were collected by VHB during the AM (7:00 AM – 9:00 AM) and PM (4:00 PM – 6:00 PM) peak periods in November 2020. Traffic counts were collected while area schools were partially open with the

VHB Engineering NC, P.C. (C-3705)
Venture I
940 Main Campus Drive, Suite 500
Raleigh, NC 27606-5217
P 919.829.0328

Memorandum

COVID-19 restrictions. The Existing (2020) AM and PM peak hour turning movement volumes are shown in the Figure MOU-1.

## Analysis Scenarios

In accordance with the Town of Apex's Unified Development Ordinance (UDO), a build-out year of 2024 will be analyzed. Therefore, weekday AM and PM peak hour analysis for the proposed development will be performed for four (4) scenarios:

- Existing (2020) Conditions
- Background (2024) Conditions
- Build (2024) Scenario
- Build (2024) Scenario with Improvements

## Background Projects and Growth

As concurred by the Town of Apex, an annual growth rate of three percent (3%) will be applied to the existing year (2020) traffic to project future conditions (2024). In addition, the following approved developments are identified as within the study area, and will be included the future year traffic analysis:

- Saddlebrook (Lawrence Assemblage/Richardson West), TIA by RKA, November 2014, 75% completed
- Sweetwater, TIA by RKA December 2014, 80% completed for residential portion, 0% for mixed use
- Buckhorn Preserve (Goodwin-MacNair), TIA by VHB, June 2015, 50% completed
- Stillwater (Womble), TIA by Stantec, February 2014, 85% completed
- Westford, TIA by KHA, December 2016, 80% completed
- Smith Farm, TIA by RKA, November 2015, 75% completed for residential portion, 0% for mixed-use
- Linden (Pricewood Assemblage) TIA by RKA, August 2016, 15% completed

Note that although a significant number of trips are expected due to the approved developments, a 3% annual traffic growth rate will still be used to offset lower-than-normal traffic counts collected under the Existing (2020) conditions. Transportation improvements due to approved developments (particularly Sweetwater and Smith Farm) will be included in the future year analysis based on the transportation zoning conditions.

## Trip Generation

Trip Generation will be conducted based on the most appropriate corresponding trip generation codes included in the *ITE Trip Generation Manual, 10th Edition*. Trip generation calculations will be based on the suggested method in the NCDOT's *"Rate vs. Equation"* spreadsheet. To provide a conservative analysis, no transit, walking, or bicycling reductions will be applied.

As shown in the preliminary trip generation results (attached), the proposed development is projected to generate 2,005 trips on a typical weekday with 139 trips occurring during the AM peak hour and 178 trips in the PM peak hour.

VHB Engineering NC, P.C. (C-3705)
Venture I
940 Main Campus Drive, Suite 500
Raleigh, NC 27606-5217
P 919.829.0328

Memorandum

| Land Use Code[1] | Land Use | Unit | ADT | AM Peak Hour | | | PM Peak Hour | | |
|---|---|---|---|---|---|---|---|---|---|
| | | | | Enter | Exit | Total | Enter | Exit | Total |
| 210 | Single-Family Detached Housing | 100 du | 1,040 | 19 | 57 | 76 | 64 | 38 | 102 |
| 220 | Multi-Family Housing (Low-Rise) | 133 du | 965 | 14 | 49 | 63 | 48 | 28 | 76 |
| *Development Total* | | | *2,005* | *33* | *106* | *139* | *112* | *66* | *178* |

Notes:

1. Land Use Code and trip generation rates are based on *ITE Trip Generation, 10th Edition*
2. Trips are determined based on the suggested method in the NCDOT Rate Vs Equation Spreadsheet.

## Trip Distribution and Assignment

The site trips will be distributed in accordance with the existing traffic patterns and planned land uses in the vicinity of the study area. Based on the traffic data, the site trips will be distributed as follows:

- from/to the east via US Highway 64 – 50%
- from/to the west via US Highway 64 – 10%
- from/to the east via Olive Chapel Road – 25%
- from/to the west via Olive Chapel Road – 5%
- from/to the south via Richardson Road – 8%
- from/to the south via Apex Barbecue Road – 2%

A graphic illustration of the proposed peak hour directional distribution percentages is shown in the attached Figure MOU-2, and the resulting AM and PM peak hour trips at each study intersection are shown in Figure MOU-3.

CC: Amy N. Neidringhaus, PE, NCDOT Highway Division 5 District 1

VHB Engineering NC, P.C. (C-3705)
Venture I
940 Main Campus Drive, Suite 500
Raleigh, NC 27606-5217
P 919.829.0328

GRAPHIC SCALE

100 0 50 100 200

1 inch = 100 ft.


WithersRavenel
Engineers | Planners | Surveyors
115 MacKenan Drive | Cary, NC 27511 | t: 919.469.3340 | license #: C-0832 | www.withersravenel.com


# HACKNEY TRACT SUBDIVISION

APEX, NORTH CAROLINA

# OVERALL SUBDIVISION PLAN

| Job No: | 02180517.20 | Drawn By | WR |
|---|---|---|---|
| Date | 10/19/20 | Designer | WR |

**PRELIMINARY**
NOT APPROVED FOR CONSTRUCTION

Revisions

Sheet No.
1.0


K:\18\18-0010\180517.10-Fuller-Hackney Tract\CAD\Drawing Sets\Preliminary\1.0 SUBDIVISION PLAN.dwg Tuesday, October 20, 2020 1:12:53 PM INGE.BRYANT

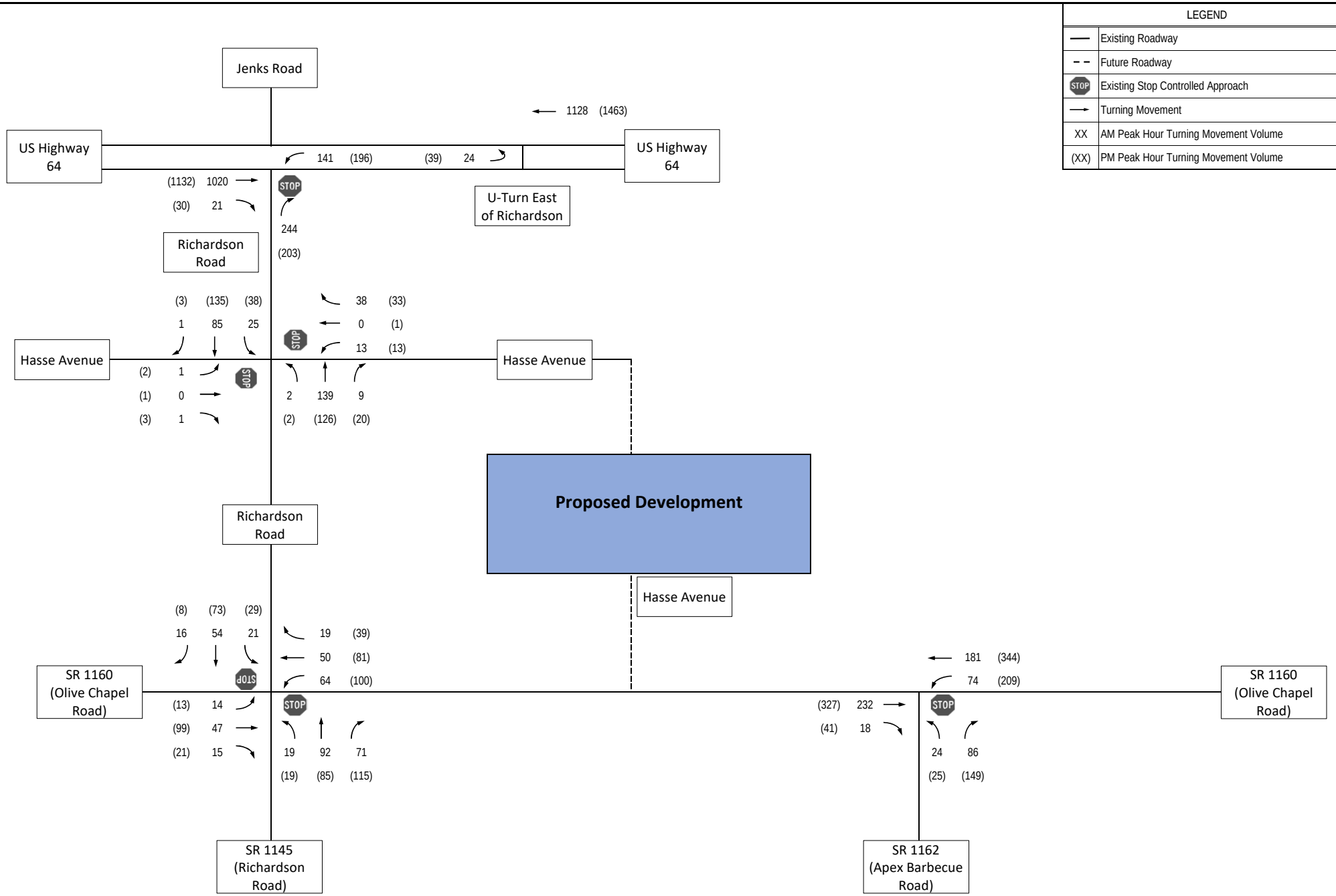




**Existing (2020) AM and PM [illegible]urning Movement Volumes**

**Hackney Tract Subdivision**
**Apex, NC**

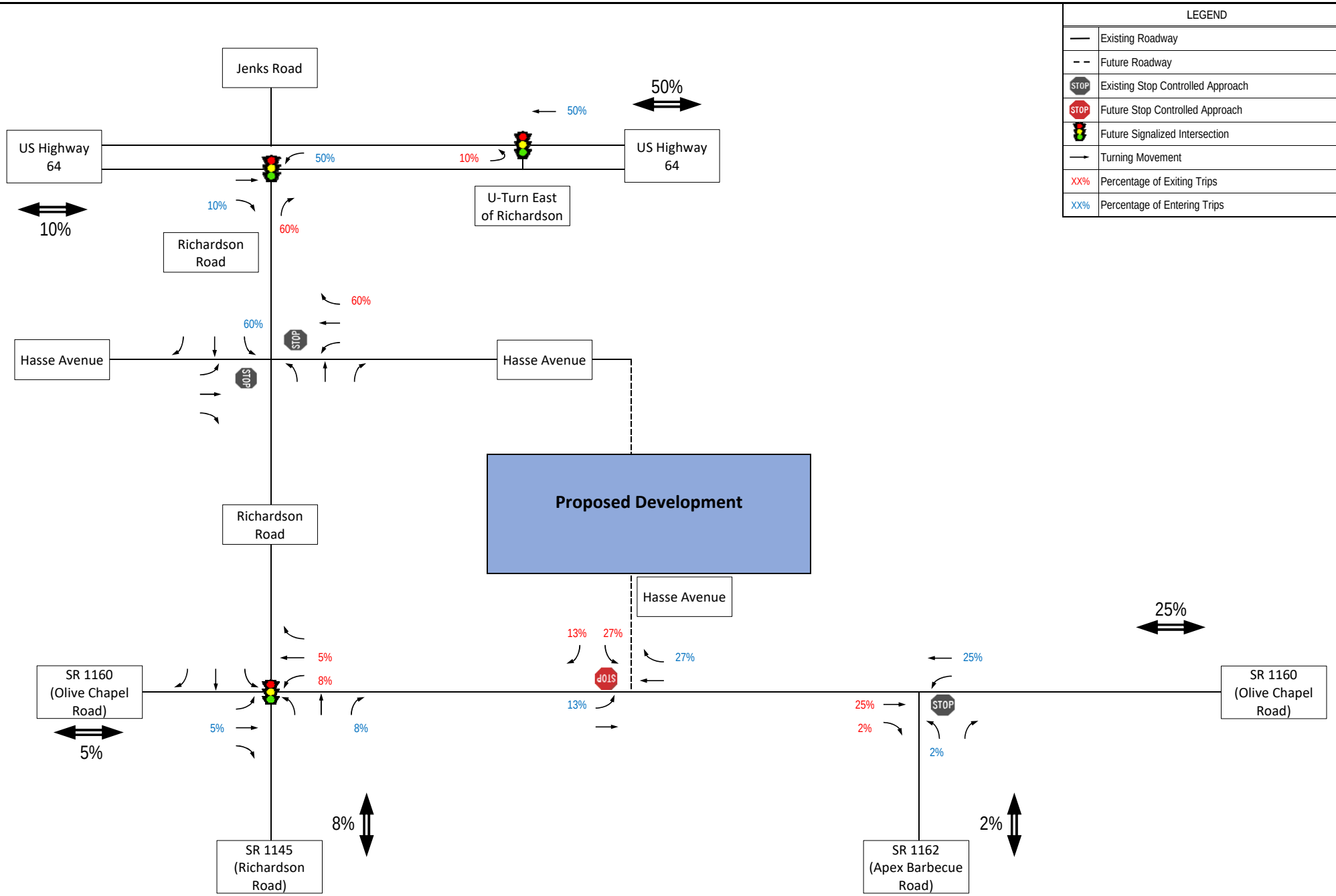


**Peak Hour Site Trip Di[illegible]signment Percentages**



**Hackney Tract Subdivision**
**Apex, NC**

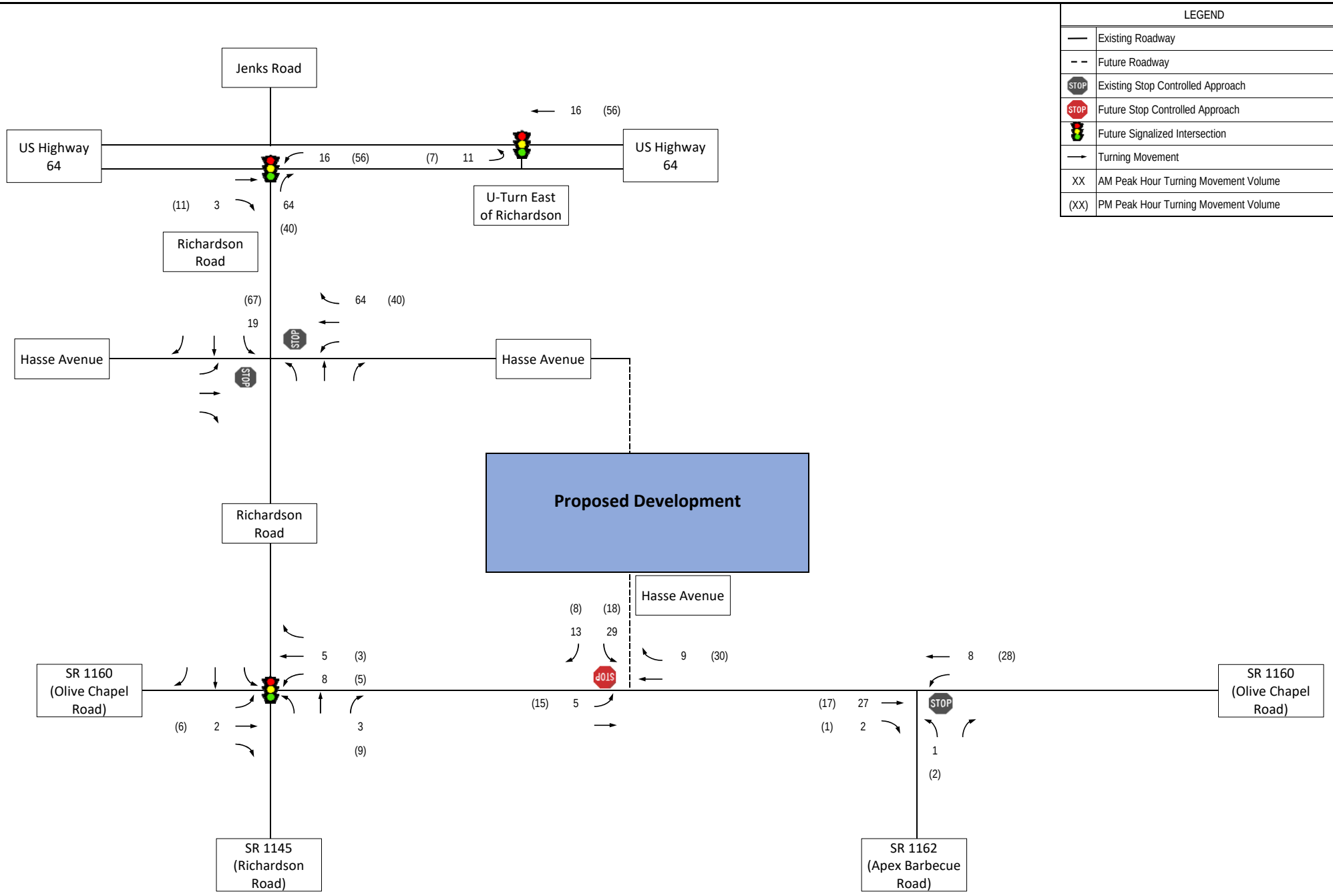




AM and P Site Trips

Hackney Tract Subdivision
Apex, NC

# APPENDIX B:

# Turning Movement Counts

# VHB Engineering NC, P.C.

Venture I
940 Main Campus Drive, Suite 500
Raleigh, NC 27606
*p: 919.829.0328 f: 919.833.0034*


File Name : OliveChapel@ApexBarbecue
Site Code :
Start Date : 11/5/2020
Page No : 1

**Groups Printed- Passenger Vehicles - Single Unit - TTST - Bicycles on Crosswalk - Pedestrians**

| | Driveway Southbound | | | | Olive Chapel Road Westbound | | | | Apex Barbecue Road Northbound | | | | Olive Chapel Road Eastbound | | | | | | |
|---|---|---|---|---|---|---|---|---|---|---|---|---|---|---|---|---|---|---|---|
| Start Time | Left | Thru | Right | Peds | Left | Thru | Right | Peds | Left | Thru | Right | Peds | Left | Thru | Right | Peds | Exclu. Total | Inclu. Total | Int. Total |
| 07:00 AM | 0 | 0 | 0 | 0 | 9 | 18 | 0 | 0 | 2 | 0 | 21 | 1 | 0 | 35 | 3 | 0 | 1 | 88 | 89 |
| 07:15 AM | 0 | 0 | 0 | 0 | 9 | 20 | 0 | 0 | 4 | 0 | 19 | 1 | 0 | 44 | 5 | 0 | 1 | 101 | 102 |
| 07:30 AM | 0 | 0 | 0 | 0 | 13 | 24 | 0 | 0 | 4 | 0 | 29 | 3 | 0 | 46 | 5 | 0 | 3 | 121 | 124 |
| 07:45 AM | 0 | 0 | 0 | 0 | 21 | 45 | 0 | 0 | 6 | 0 | 30 | 4 | 0 | 57 | 10 | 0 | 4 | 169 | 173 |
| Total | 0 | 0 | 0 | 0 | 52 | 107 | 0 | 0 | 16 | 0 | 99 | 9 | 0 | 182 | 23 | 0 | 9 | 479 | 488 |
| 08:00 AM | 0 | 0 | 0 | 0 | 13 | 43 | 0 | 0 | 7 | 0 | 19 | 5 | 0 | 52 | 2 | 0 | 5 | 136 | 141 |
| 08:15 AM | 0 | 0 | 0 | 0 | 14 | 51 | 0 | 0 | 7 | 0 | 23 | 0 | 0 | 58 | 5 | 0 | 0 | 158 | 158 |
| 08:30 AM | 0 | 0 | 0 | 0 | 16 | 36 | 0 | 0 | 6 | 0 | 27 | 2 | 0 | 54 | 4 | 0 | 2 | 143 | 145 |
| 08:45 AM | 0 | 0 | 0 | 0 | 31 | 51 | 0 | 0 | 4 | 0 | 17 | 0 | 0 | 68 | 7 | 0 | 0 | 178 | 178 |
| Total | 0 | 0 | 0 | 0 | 74 | 181 | 0 | 0 | 24 | 0 | 86 | 7 | 0 | 232 | 18 | 0 | 7 | 615 | 622 |
| *** BREAK *** | | | | | | | | | | | | | | | | | | | |
| 04:00 PM | 0 | 1 | 0 | 0 | 47 | 72 | 0 | 0 | 6 | 0 | 27 | 1 | 0 | 64 | 8 | 0 | 1 | 225 | 226 |
| 04:15 PM | 0 | 0 | 0 | 0 | 39 | 87 | 1 | 0 | 12 | 0 | 30 | 0 | 0 | 52 | 10 | 0 | 0 | 231 | 231 |
| 04:30 PM | 0 | 0 | 0 | 0 | 43 | 72 | 0 | 0 | 4 | 0 | 32 | 6 | 0 | 74 | 6 | 0 | 6 | 231 | 237 |
| 04:45 PM | 0 | 0 | 0 | 0 | 32 | 76 | 0 | 0 | 7 | 0 | 30 | 5 | 0 | 70 | 9 | 0 | 5 | 224 | 229 |
| Total | 0 | 1 | 0 | 0 | 161 | 307 | 1 | 0 | 29 | 0 | 119 | 12 | 0 | 260 | 33 | 0 | 12 | 911 | 923 |
| 05:00 PM | 0 | 0 | 1 | 0 | 49 | 94 | 0 | 0 | 8 | 0 | 32 | 4 | 0 | 83 | 8 | 0 | 4 | 275 | 279 |
| 05:15 PM | 0 | 0 | 0 | 0 | 59 | 81 | 0 | 0 | 9 | 0 | 42 | 8 | 0 | 91 | 8 | 0 | 8 | 290 | 298 |
| 05:30 PM | 0 | 0 | 0 | 0 | 50 | 85 | 0 | 0 | 6 | 0 | 32 | 9 | 0 | 83 | 8 | 0 | 9 | 264 | 273 |
| 05:45 PM | 0 | 0 | 0 | 0 | 51 | 84 | 0 | 0 | 2 | 0 | 43 | 4 | 0 | 70 | 17 | 0 | 4 | 267 | 271 |
| Total | 0 | 0 | 1 | 0 | 209 | 344 | 0 | 0 | 25 | 0 | 149 | 25 | 0 | 327 | 41 | 0 | 25 | 1096 | 1121 |
| Grand Total | 0 | 1 | 1 | 0 | 496 | 939 | 1 | 0 | 94 | 0 | 453 | 53 | 0 | 1001 | 115 | 0 | 53 | 3101 | 3154 |
| Apprch % | 0 | 50 | 50 | | 34.5 | 65.4 | 0.1 | | 17.2 | 0 | 82.8 | | 0 | 89.7 | 10.3 | | | | |
| Total % | 0 | 0 | 0 | | 16 | 30.3 | 0 | | 3 | 0 | 14.6 | | 0 | 32.3 | 3.7 | | 1.7 | 98.3 | |
| Passenger Vehicles | 0 | 1 | 1 | | 476 | 916 | 1 | | 93 | 0 | 446 | | 0 | 981 | 115 | | 0 | 0 | 3030 |
| % Passenger Vehicles | 0 | 100 | 100 | 0 | 96 | 97.6 | 100 | 0 | 98.9 | 0 | 98.5 | 0 | 0 | 98 | 100 | 0 | 0 | 0 | 96.1 |
| Single Unit | 0 | 0 | 0 | | 20 | 20 | 0 | | 1 | 0 | 7 | | 0 | 19 | 0 | | 0 | 0 | 67 |
| % Single Unit | 0 | 0 | 0 | 0 | 4 | 2.1 | 0 | 0 | 1.1 | 0 | 1.5 | 0 | 0 | 1.9 | 0 | 0 | 0 | 0 | 2.1 |
| TTST | 0 | 0 | 0 | | 0 | 3 | 0 | | 0 | 0 | 0 | | 0 | 1 | 0 | | 0 | 0 | 4 |
| % TTST | 0 | 0 | 0 | 0 | 0 | 0.3 | 0 | 0 | 0 | 0 | 0 | 0 | 0 | 0.1 | 0 | 0 | 0 | 0 | 0.1 |
| Bicycles on Crosswalk | 0 | 0 | 0 | | 0 | 0 | 0 | | 0 | 0 | 0 | | 0 | 0 | 0 | | 0 | 0 | 4 |
| % Bicycles on Crosswalk | 0 | 0 | 0 | 0 | 0 | 0 | 0 | 0 | 0 | 0 | 0 | 7.5 | 0 | 0 | 0 | 0 | 0 | 0 | 0.1 |
| Pedestrians | 0 | 0 | 0 | | 0 | 0 | 0 | | 0 | 0 | 0 | | 0 | 0 | 0 | | 0 | 0 | 49 |
| % Pedestrians | 0 | 0 | 0 | 0 | 0 | 0 | 0 | 0 | 0 | 0 | 0 | 92.5 | 0 | 0 | 0 | 0 | 0 | 0 | 1.6 |

# VHB Engineering NC, P.C.

Venture I
940 Main Campus Drive, Suite 500
Raleigh, NC 27606
*p: 919.829.0328 f: 919.833.0034*


File Name : OliveChapel@ApexBarbecue
Site Code :
Start Date : 11/5/2020
Page No : 2

| | Driveway Southbound | | | | Olive Chapel Road Westbound | | | | Apex Barbecue Road Northbound | | | | Olive Chapel Road Eastbound | | | | |
|---|---|---|---|---|---|---|---|---|---|---|---|---|---|---|---|---|---|
| Start Time | Left | Thru | Right | App. Total | Left | Thru | Right | App. Total | Left | Thru | Right | App. Total | Left | Thru | Right | App. Total | Int. Total |
| Peak Hour Analysis From 07:00 AM to 11:45 AM - Peak 1 of 1 | | | | | | | | | | | | | | | | | |
| Peak Hour for Entire Intersection Begins at 08:00 AM | | | | | | | | | | | | | | | | | |
| 08:00 AM | 0 | 0 | 0 | 0 | 13 | 43 | 0 | 56 | 7 | 0 | 19 | 26 | 0 | 52 | 2 | 54 | 136 |
| 08:15 AM | 0 | 0 | 0 | 0 | 14 | 51 | 0 | 65 | 7 | 0 | 23 | 30 | 0 | 58 | 5 | 63 | 158 |
| 08:30 AM | 0 | 0 | 0 | 0 | 16 | 36 | 0 | 52 | 6 | 0 | 27 | 33 | 0 | 54 | 4 | 58 | 143 |
| 08:45 AM | 0 | 0 | 0 | 0 | 31 | 51 | 0 | 82 | 4 | 0 | 17 | 21 | 0 | 68 | 7 | 75 | 178 |
| Total Volume | 0 | 0 | 0 | 0 | 74 | 181 | 0 | 255 | 24 | 0 | 86 | 110 | 0 | 232 | 18 | 250 | 615 |
| % App. Total | 0 | 0 | 0 | | 29 | 71 | 0 | | 21.8 | 0 | 78.2 | | 0 | 92.8 | 7.2 | | |
| PHF | .000 | .000 | .000 | .000 | .597 | .887 | .000 | .777 | .857 | .000 | .796 | .833 | .000 | .853 | .643 | .833 | .864 |
| Passenger Vehicles | 0 | 0 | 0 | 0 | 62 | 171 | 0 | 233 | 23 | 0 | 83 | 106 | 0 | 222 | 18 | 240 | 579 |
| % Passenger Vehicles | 0 | 0 | 0 | 0 | 83.8 | 94.5 | 0 | 91.4 | 95.8 | 0 | 96.5 | 96.4 | 0 | 95.7 | 100 | 96.0 | 94.1 |
| Single Unit | 0 | 0 | 0 | 0 | 12 | 9 | 0 | 21 | 1 | 0 | 3 | 4 | 0 | 10 | 0 | 10 | 35 |
| % Single Unit | 0 | 0 | 0 | 0 | 16.2 | 5.0 | 0 | 8.2 | 4.2 | 0 | 3.5 | 3.6 | 0 | 4.3 | 0 | 4.0 | 5.7 |
| TTST | 0 | 0 | 0 | 0 | 0 | 1 | 0 | 1 | 0 | 0 | 0 | 0 | 0 | 0 | 0 | 0 | 1 |
| % TTST | 0 | 0 | 0 | 0 | 0 | 0.6 | 0 | 0.4 | 0 | 0 | 0 | 0 | 0 | 0 | 0 | 0 | 0.2 |
| Bicycles on Crosswalk | 0 | 0 | 0 | 0 | 0 | 0 | 0 | 0 | 0 | 0 | 0 | 0 | 0 | 0 | 0 | 0 | 0 |
| % Bicycles on Crosswalk | 0 | 0 | 0 | 0 | 0 | 0 | 0 | 0 | 0 | 0 | 0 | 0 | 0 | 0 | 0 | 0 | 0 |
| Pedestrians | 0 | 0 | 0 | 0 | 0 | 0 | 0 | 0 | 0 | 0 | 0 | 0 | 0 | 0 | 0 | 0 | 0 |
| % Pedestrians | 0 | 0 | 0 | 0 | 0 | 0 | 0 | 0 | 0 | 0 | 0 | 0 | 0 | 0 | 0 | 0 | 0 |

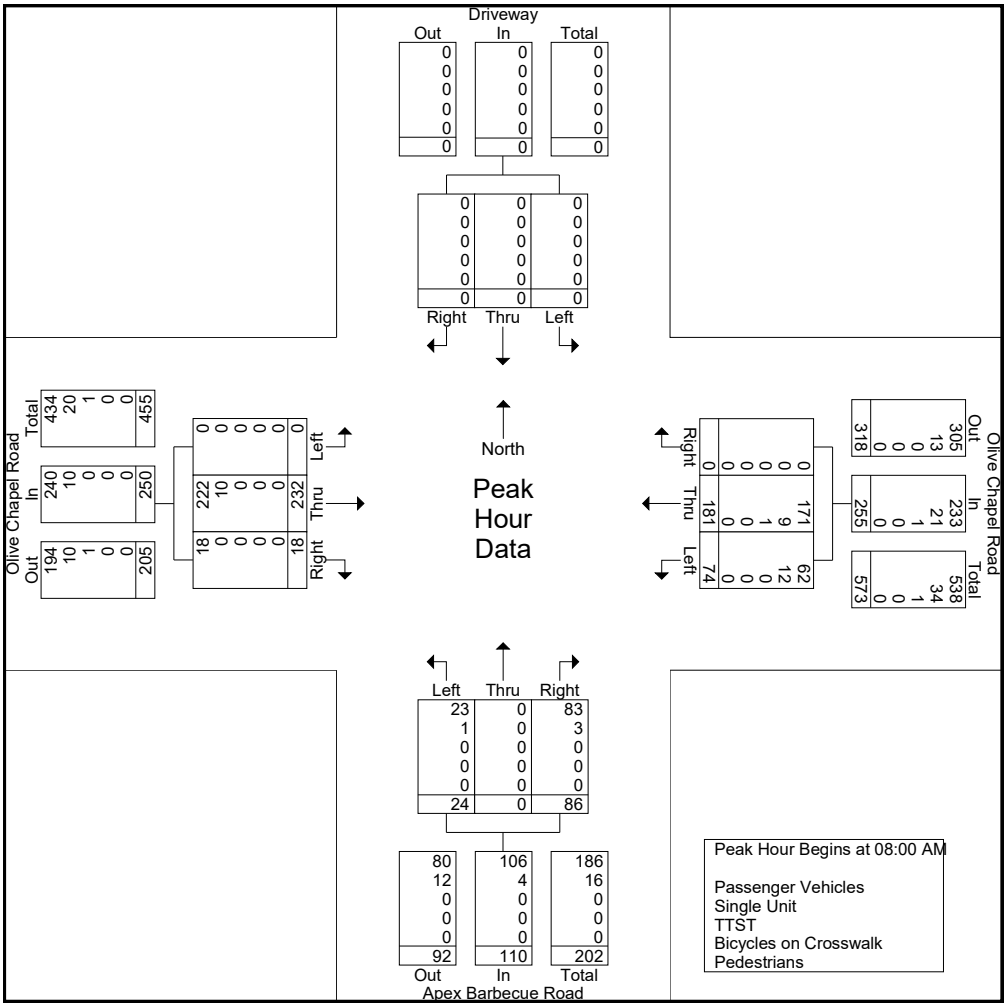

# VHB Engineering NC, P.C.

Venture I
940 Main Campus Drive, Suite 500
Raleigh, NC 27606
*p: 919.829.0328 f: 919.833.0034*


File Name : OliveChapel@ApexBarbecue
Site Code :
Start Date : 11/5/2020
Page No : 3

| | Driveway Southbound | | | | Olive Chapel Road Westbound | | | | Apex Barbecue Road Northbound | | | | Olive Chapel Road Eastbound | | | | |
|---|---|---|---|---|---|---|---|---|---|---|---|---|---|---|---|---|---|
| Start Time | Left | Thru | Right | App. Total | Left | Thru | Right | App. Total | Left | Thru | Right | App. Total | Left | Thru | Right | App. Total | Int. Total |
| Peak Hour Analysis From 12:00 PM to 05:45 PM - Peak 1 of 1 | | | | | | | | | | | | | | | | | |
| Peak Hour for Entire Intersection Begins at 05:00 PM | | | | | | | | | | | | | | | | | |
| 05:00 PM | 0 | 0 | 1 | 1 | 49 | 94 | 0 | 143 | 8 | 0 | 32 | 40 | 0 | 83 | 8 | 91 | 275 |
| 05:15 PM | 0 | 0 | 0 | 0 | 59 | 81 | 0 | 140 | 9 | 0 | 42 | 51 | 0 | 91 | 8 | 99 | 290 |
| 05:30 PM | 0 | 0 | 0 | 0 | 50 | 85 | 0 | 135 | 6 | 0 | 32 | 38 | 0 | 83 | 8 | 91 | 264 |
| 05:45 PM | 0 | 0 | 0 | 0 | 51 | 84 | 0 | 135 | 2 | 0 | 43 | 45 | 0 | 70 | 17 | 87 | 267 |
| Total Volume | 0 | 0 | 1 | 1 | 209 | 344 | 0 | 553 | 25 | 0 | 149 | 174 | 0 | 327 | 41 | 368 | 1096 |
| % App. Total | 0 | 0 | 100 | | 37.8 | 62.2 | 0 | | 14.4 | 0 | 85.6 | | 0 | 88.9 | 11.1 | | |
| PHF | .000 | .000 | .250 | .250 | .886 | .915 | .000 | .967 | .694 | .000 | .866 | .853 | .000 | .898 | .603 | .929 | .945 |
| Passenger Vehicles | 0 | 0 | 1 | 1 | 209 | 344 | 0 | 553 | 25 | 0 | 149 | 174 | 0 | 327 | 41 | 368 | 1096 |
| % Passenger Vehicles | 0 | 0 | 100 | 100 | 100 | 100 | 0 | 100 | 100 | 0 | 100 | 100 | 0 | 100 | 100 | 100 | 100 |
| Single Unit | 0 | 0 | 0 | 0 | 0 | 0 | 0 | 0 | 0 | 0 | 0 | 0 | 0 | 0 | 0 | 0 | 0 |
| % Single Unit | 0 | 0 | 0 | 0 | 0 | 0 | 0 | 0 | 0 | 0 | 0 | 0 | 0 | 0 | 0 | 0 | 0 |
| TTST | 0 | 0 | 0 | 0 | 0 | 0 | 0 | 0 | 0 | 0 | 0 | 0 | 0 | 0 | 0 | 0 | 0 |
| % TTST | 0 | 0 | 0 | 0 | 0 | 0 | 0 | 0 | 0 | 0 | 0 | 0 | 0 | 0 | 0 | 0 | 0 |
| Bicycles on Crosswalk | 0 | 0 | 0 | 0 | 0 | 0 | 0 | 0 | 0 | 0 | 0 | 0 | 0 | 0 | 0 | 0 | 0 |
| % Bicycles on Crosswalk | 0 | 0 | 0 | 0 | 0 | 0 | 0 | 0 | 0 | 0 | 0 | 0 | 0 | 0 | 0 | 0 | 0 |
| Pedestrians | 0 | 0 | 0 | 0 | 0 | 0 | 0 | 0 | 0 | 0 | 0 | 0 | 0 | 0 | 0 | 0 | 0 |
| % Pedestrians | 0 | 0 | 0 | 0 | 0 | 0 | 0 | 0 | 0 | 0 | 0 | 0 | 0 | 0 | 0 | 0 | 0 |

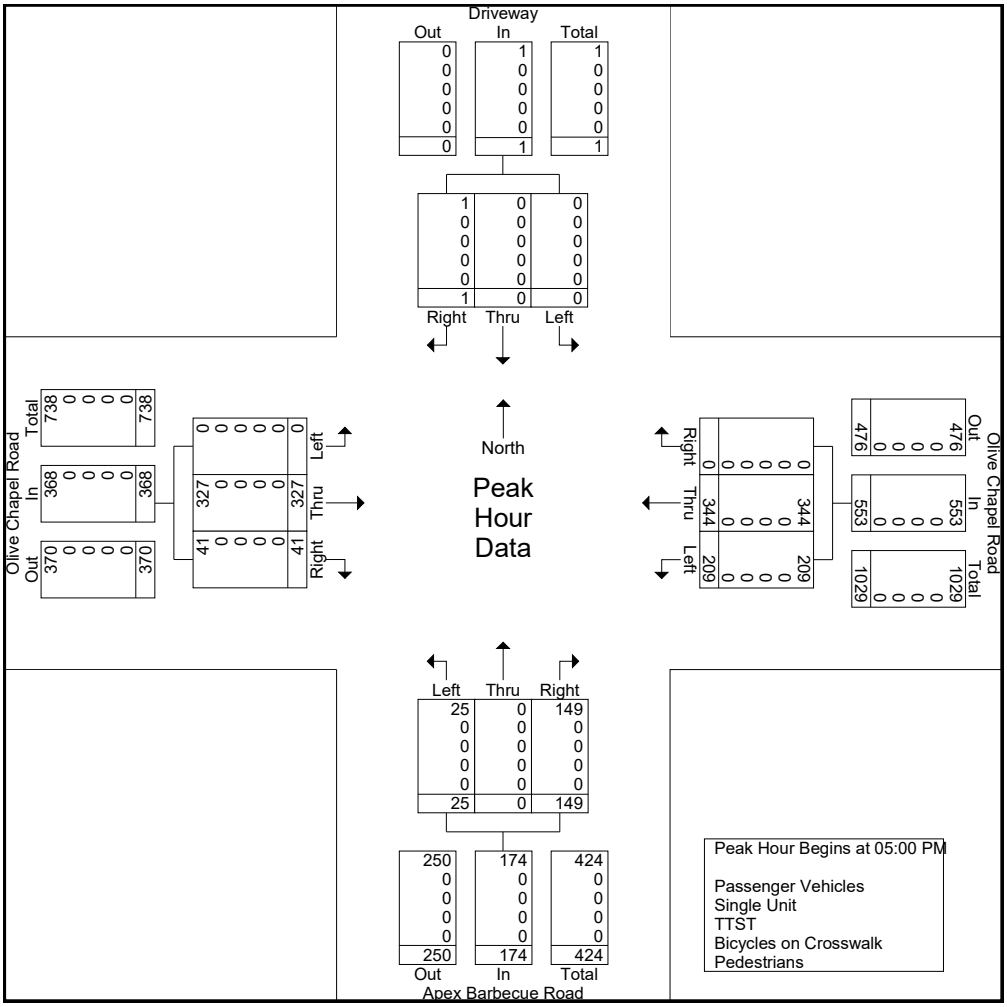

# VHB Engineering NC, P.C.

Venture I
940 Main Campus Drive, Suite 500
Raleigh, NC 27606
*p: 919.829.0328 f: 919.833.0034*


File Name : OliveChapel@Richardson
Site Code :
Start Date : 11/5/2020
Page No : 1

**Groups Printed- Passenger Vehicles - Single Unit - TTST - Bicycles on Crosswalk - Pedestrians**

| | Richardson Road Southbound | | | | Olive Chapel Road Westbound | | | | Richardson Road Northbound | | | | Olive Chapel Road Eastbound | | | | | | |
|---|---|---|---|---|---|---|---|---|---|---|---|---|---|---|---|---|---|---|---|
| Start Time | Left | Thru | Right | Peds | Left | Thru | Right | Peds | Left | Thru | Right | Peds | Left | Thru | Right | Peds | Exclu. Total | Inclu. Total | Int. Total |
| 07:00 AM | 3 | 14 | 1 | 0 | 9 | 8 | 1 | 1 | 6 | 14 | 5 | 0 | 1 | 8 | 4 | 0 | 0 | 75 | 75 |
| 07:15 AM | 2 | 8 | 7 | 0 | 4 | 14 | 3 | 0 | 6 | 23 | 11 | 0 | 4 | 9 | 4 | 0 | 0 | 95 | 95 |
| 07:30 AM | 0 | 15 | 2 | 0 | 8 | 9 | 7 | 1 | 6 | 24 | 10 | 2 | 8 | 23 | 3 | 1 | 0 | 119 | 119 |
| 07:45 AM | 5 | 14 | 4 | 0 | 13 | 16 | 4 | 0 | 5 | 15 | 11 | 0 | 0 | 11 | 2 | 0 | 0 | 100 | 100 |
| Total | 10 | 51 | 14 | 0 | 34 | 47 | 15 | 2 | 23 | 76 | 37 | 2 | 13 | 51 | 13 | 1 | 0 | 389 | 389 |
| 08:00 AM | 3 | 11 | 3 | 0 | 14 | 17 | 5 | 1 | 4 | 23 | 14 | 4 | 3 | 8 | 2 | 0 | 0 | 112 | 112 |
| 08:15 AM | 3 | 18 | 4 | 0 | 15 | 9 | 5 | 1 | 4 | 30 | 17 | 2 | 2 | 14 | 3 | 0 | 0 | 127 | 127 |
| 08:30 AM | 4 | 13 | 3 | 2 | 15 | 14 | 6 | 0 | 6 | 16 | 18 | 0 | 5 | 12 | 4 | 0 | 2 | 116 | 118 |
| 08:45 AM | 11 | 12 | 6 | 1 | 20 | 10 | 3 | 0 | 5 | 23 | 22 | 0 | 4 | 13 | 6 | 0 | 1 | 135 | 136 |
| Total | 21 | 54 | 16 | 3 | 64 | 50 | 19 | 2 | 19 | 92 | 71 | 6 | 14 | 47 | 15 | 0 | 3 | 490 | 493 |
| *** BREAK *** | | | | | | | | | | | | | | | | | | | |
| 04:00 PM | 6 | 19 | 2 | 0 | 27 | 18 | 7 | 0 | 6 | 14 | 13 | 1 | 4 | 26 | 1 | 0 | 0 | 144 | 144 |
| 04:15 PM | 4 | 13 | 7 | 0 | 22 | 30 | 9 | 4 | 3 | 16 | 13 | 0 | 1 | 18 | 2 | 3 | 0 | 145 | 145 |
| 04:30 PM | 12 | 23 | 0 | 2 | 16 | 20 | 8 | 2 | 7 | 12 | 23 | 0 | 5 | 21 | 3 | 0 | 2 | 152 | 154 |
| 04:45 PM | 5 | 23 | 9 | 1 | 21 | 18 | 12 | 0 | 3 | 15 | 18 | 0 | 1 | 21 | 3 | 0 | 1 | 149 | 150 |
| Total | 27 | 78 | 18 | 3 | 86 | 86 | 36 | 6 | 19 | 57 | 67 | 1 | 11 | 86 | 9 | 3 | 3 | 590 | 593 |
| 05:00 PM | 6 | 23 | 2 | 1 | 28 | 23 | 7 | 0 | 4 | 21 | 39 | 1 | 3 | 18 | 4 | 0 | 1 | 179 | 180 |
| 05:15 PM | 8 | 17 | 2 | 0 | 29 | 30 | 9 | 1 | 4 | 26 | 29 | 0 | 3 | 21 | 3 | 0 | 0 | 182 | 182 |
| 05:30 PM | 4 | 18 | 4 | 1 | 19 | 12 | 16 | 0 | 9 | 23 | 26 | 0 | 2 | 28 | 6 | 0 | 1 | 167 | 168 |
| 05:45 PM | 11 | 15 | 0 | 1 | 24 | 16 | 7 | 0 | 2 | 15 | 21 | 0 | 5 | 32 | 8 | 0 | 1 | 156 | 157 |
| Total | 29 | 73 | 8 | 3 | 100 | 81 | 39 | 1 | 19 | 85 | 115 | 1 | 13 | 99 | 21 | 0 | 3 | 684 | 687 |
| Grand Total | 87 | 256 | 56 | 9 | 284 | 264 | 109 | 11 | 80 | 310 | 290 | 10 | 51 | 283 | 58 | 4 | 9 | 2153 | 2162 |
| Apprch % | 21.8 | 64.2 | 14 | | 42.5 | 39.5 | 16.3 | 1.6 | 11.6 | 44.9 | 42 | 1.4 | 12.9 | 71.5 | 14.6 | 1 | | | |
| Total % | 4 | 11.9 | 2.6 | | 13.2 | 12.3 | 5.1 | 0.5 | 3.7 | 14.4 | 13.5 | 0.5 | 2.4 | 13.1 | 2.7 | 0.2 | 0.4 | 99.6 | |
| Passenger Vehicles | 86 | 247 | 45 | | 276 | 257 | 107 | 0 | 79 | 298 | 283 | 0 | 47 | 280 | 56 | 0 | 0 | 0 | 2061 |
| % Passenger Vehicles | 98.9 | 96.5 | 80.4 | 0 | 97.2 | 97.3 | 98.2 | 0 | 98.8 | 96.1 | 97.6 | 0 | 92.2 | 98.9 | 96.6 | 0 | 0 | 0 | 95.3 |
| Single Unit | 1 | 7 | 9 | | 8 | 6 | 2 | 0 | 0 | 8 | 7 | 0 | 4 | 3 | 1 | 0 | 0 | 0 | 56 |
| % Single Unit | 1.1 | 2.7 | 16.1 | 0 | 2.8 | 2.3 | 1.8 | 0 | 0 | 2.6 | 2.4 | 0 | 7.8 | 1.1 | 1.7 | 0 | 0 | 0 | 2.6 |
| TTST | 0 | 2 | 2 | | 0 | 1 | 0 | 0 | 1 | 4 | 0 | 0 | 0 | 0 | 1 | 0 | 0 | 0 | 11 |
| % TTST | 0 | 0.8 | 3.6 | 0 | 0 | 0.4 | 0 | 0 | 1.2 | 1.3 | 0 | 0 | 0 | 0 | 1.7 | 0 | 0 | 0 | 0.5 |
| Bicycles on Crosswalk | 0 | 0 | 0 | | 0 | 0 | 0 | 0 | 0 | 0 | 0 | 2 | 0 | 0 | 0 | 0 | 0 | 0 | 2 |
| % Bicycles on Crosswalk | 0 | 0 | 0 | 0 | 0 | 0 | 0 | 0 | 0 | 0 | 0 | 20 | 0 | 0 | 0 | 0 | 0 | 0 | 0.1 |
| Pedestrians | 0 | 0 | 0 | | 0 | 0 | 0 | 11 | 0 | 0 | 0 | 8 | 0 | 0 | 0 | 4 | 0 | 0 | 32 |
| % Pedestrians | 0 | 0 | 0 | 100 | 0 | 0 | 0 | 100 | 0 | 0 | 0 | 80 | 0 | 0 | 0 | 100 | 0 | 0 | 1.5 |

# VHB Engineering NC, P.C.

Venture I
940 Main Campus Drive, Suite 500
Raleigh, NC 27606
*p: 919.829.0328 f: 919.833.0034*


File Name : OliveChapel@Richardson
Site Code :
Start Date : 11/5/2020
Page No : 2

| | Richardson Road Southbound | | | | Olive Chapel Road Westbound | | | | | Richardson Road Northbound | | | | | Olive Chapel Road Eastbound | | | | | |
|---|---|---|---|---|---|---|---|---|---|---|---|---|---|---|---|---|---|---|---|---|
| Start Time | Left | Thru | Right | App. Total | Left | Thru | Right | Peds | App. Total | Left | Thru | Right | Peds | App. Total | Left | Thru | Right | Peds | App. Total | Int. Total |
| Peak Hour Analysis From 07:00 AM to 11:45 AM - Peak 1 of 1 | | | | | | | | | | | | | | | | | | | | |
| Peak Hour for Entire Intersection Begins at 08:00 AM | | | | | | | | | | | | | | | | | | | | |
| 08:00 AM | 3 | 11 | 3 | 17 | 14 | 17 | 5 | 1 | 37 | 4 | 23 | 14 | 4 | 45 | 3 | 8 | 2 | 0 | 13 | 112 |
| 08:15 AM | 3 | 18 | 4 | 25 | 15 | 9 | 5 | 1 | 30 | 4 | 30 | 17 | 2 | 53 | 2 | 14 | 3 | 0 | 19 | 127 |
| 08:30 AM | 4 | 13 | 3 | 20 | 15 | 14 | 6 | 0 | 35 | 6 | 16 | 18 | 0 | 40 | 5 | 12 | 4 | 0 | 21 | 116 |
| 08:45 AM | 11 | 12 | 6 | 29 | 20 | 10 | 3 | 0 | 33 | 5 | 23 | 22 | 0 | 50 | 4 | 13 | 6 | 0 | 23 | 135 |
| Total Volume | 21 | 54 | 16 | 91 | 64 | 50 | 19 | 2 | 135 | 19 | 92 | 71 | 6 | 188 | 14 | 47 | 15 | 0 | 76 | 490 |
| % App. Total | 23.1 | 59.3 | 17.6 | | 47.4 | 37 | 14.1 | 1.5 | | 10.1 | 48.9 | 37.8 | 3.2 | | 18.4 | 61.8 | 19.7 | 0 | | |
| PHF | .477 | .750 | .667 | .784 | .800 | .735 | .792 | .500 | .912 | .792 | .767 | .807 | .375 | .887 | .700 | .839 | .625 | .000 | .826 | .907 |
| Passenger Vehicles | 21 | 50 | 10 | 81 | 61 | 48 | 18 | 0 | 127 | 18 | 89 | 68 | 0 | 175 | 13 | 46 | 14 | 0 | 73 | 456 |
| % Passenger Vehicles | | | | | | | | | | | | | | | | | | | | |
| Single Unit | 0 | 2 | 4 | 6 | 3 | 2 | 1 | 0 | 6 | 0 | 3 | 3 | 0 | 6 | 1 | 1 | 0 | 0 | 2 | 20 |
| % Single Unit | 0 | 3.7 | 25.0 | 6.6 | 4.7 | 4.0 | 5.3 | 0 | 4.4 | 0 | 3.3 | 4.2 | 0 | 3.2 | 7.1 | 2.1 | 0 | 0 | 2.6 | 4.1 |
| TTST | 0 | 2 | 2 | 4 | 0 | 0 | 0 | 0 | 0 | 1 | 0 | 0 | 0 | 1 | 0 | 0 | 1 | 0 | 1 | 6 |
| % TTST | 0 | 3.7 | 12.5 | 4.4 | 0 | 0 | 0 | 0 | 0 | 5.3 | 0 | 0 | 0 | 0.5 | 0 | 0 | 6.7 | 0 | 1.3 | 1.2 |
| Bicycles on Crosswalk | 0 | 0 | 0 | 0 | 0 | 0 | 0 | 0 | 0 | 0 | 0 | 0 | 0 | 0 | 0 | 0 | 0 | 0 | 0 | 0 |
| % Bicycles on Crosswalk | 0 | 0 | 0 | 0 | 0 | 0 | 0 | 0 | 0 | 0 | 0 | 0 | 0 | 0 | 0 | 0 | 0 | 0 | 0 | 0 |
| Pedestrians | 0 | 0 | 0 | 0 | 0 | 0 | 0 | 2 | 2 | 0 | 0 | 0 | 6 | 6 | 0 | 0 | 0 | 0 | 0 | 8 |
| % Pedestrians | 0 | 0 | 0 | 0 | 0 | 0 | 0 | 100 | 1.5 | 0 | 0 | 0 | 100 | 3.2 | 0 | 0 | 0 | 0 | 0 | 1.6 |

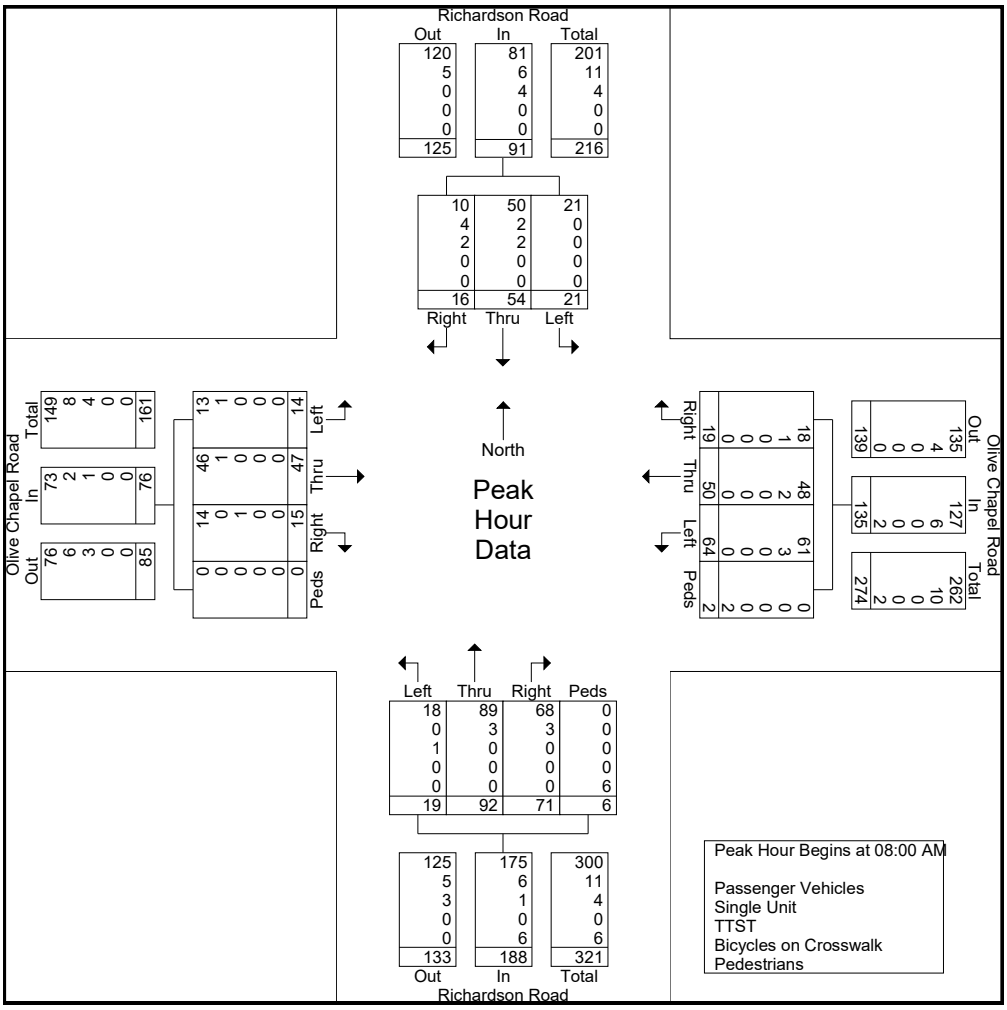

# VHB Engineering NC, P.C.

Venture I
940 Main Campus Drive, Suite 500
Raleigh, NC 27606
*p: 919.829.0328 f: 919.833.0034*


File Name : OliveChapel@Richardson
Site Code :
Start Date : 11/5/2020
Page No : 3

| | Richardson Road Southbound | | | | Olive Chapel Road Westbound | | | | | Richardson Road Northbound | | | | | Olive Chapel Road Eastbound | | | | | |
|---|---|---|---|---|---|---|---|---|---|---|---|---|---|---|---|---|---|---|---|---|
| Start Time | Left | Thru | Right | App. Total | Left | Thru | Right | Peds | App. Total | Left | Thru | Right | Peds | App. Total | Left | Thru | Right | Peds | App. Total | Int. Total |
| Peak Hour Analysis From 12:00 PM to 05:45 PM - Peak 1 of 1 | | | | | | | | | | | | | | | | | | | | |
| Peak Hour for Entire Intersection Begins at 05:00 PM | | | | | | | | | | | | | | | | | | | | |
| 05:00 PM | 6 | 23 | 2 | 31 | 28 | 23 | 7 | 0 | 58 | 4 | 21 | 39 | 1 | 65 | 3 | 18 | 4 | 0 | 25 | 179 |
| 05:15 PM | 8 | 17 | 2 | 27 | 29 | 30 | 9 | 1 | 69 | 4 | 26 | 29 | 0 | 59 | 3 | 21 | 3 | 0 | 27 | 182 |
| 05:30 PM | 4 | 18 | 4 | 26 | 19 | 12 | 16 | 0 | 47 | 9 | 23 | 26 | 0 | 58 | 2 | 28 | 6 | 0 | 36 | 167 |
| 05:45 PM | 11 | 15 | 0 | 26 | 24 | 16 | 7 | 0 | 47 | 2 | 15 | 21 | 0 | 38 | 5 | 32 | 8 | 0 | 45 | 156 |
| Total Volume | 29 | 73 | 8 | 110 | 100 | 81 | 39 | 1 | 221 | 19 | 85 | 115 | 1 | 220 | 13 | 99 | 21 | 0 | 133 | 684 |
| % App. Total | 26.4 | 66.4 | 7.3 | | 45.2 | 36.7 | 17.6 | 0.5 | | 8.6 | 38.6 | 52.3 | 0.5 | | 9.8 | 74.4 | 15.8 | 0 | | |
| PHF | .659 | .793 | .500 | .887 | .862 | .675 | .609 | .250 | .801 | .528 | .817 | .737 | .250 | .846 | .650 | .773 | .656 | .000 | .739 | .940 |
| Passenger Vehicles | 29 | 73 | 8 | 110 | 100 | 81 | 39 | 0 | 220 | 19 | 84 | 114 | 0 | 217 | 13 | 98 | 21 | 0 | 132 | 679 |
| % Passenger Vehicles | | | | | | | | | | | | | | | | | | | | |
| Single Unit | 0 | 0 | 0 | 0 | 0 | 0 | 0 | 0 | 0 | 0 | 1 | 1 | 0 | 2 | 0 | 1 | 0 | 0 | 1 | 3 |
| % Single Unit | 0 | 0 | 0 | 0 | 0 | 0 | 0 | 0 | 0 | 0 | 1.2 | 0.9 | 0 | 0.9 | 0 | 1.0 | 0 | 0 | 0.8 | 0.4 |
| TTST | 0 | 0 | 0 | 0 | 0 | 0 | 0 | 0 | 0 | 0 | 0 | 0 | 0 | 0 | 0 | 0 | 0 | 0 | 0 | 0 |
| % TTST | 0 | 0 | 0 | 0 | 0 | 0 | 0 | 0 | 0 | 0 | 0 | 0 | 0 | 0 | 0 | 0 | 0 | 0 | 0 | 0 |
| Bicycles on Crosswalk | 0 | 0 | 0 | 0 | 0 | 0 | 0 | 0 | 0 | 0 | 0 | 0 | 1 | 1 | 0 | 0 | 0 | 0 | 0 | 1 |
| % Bicycles on Crosswalk | 0 | 0 | 0 | 0 | 0 | 0 | 0 | 0 | 0 | 0 | 0 | 0 | 100 | 0.5 | 0 | 0 | 0 | 0 | 0 | 0.1 |
| Pedestrians | 0 | 0 | 0 | 0 | 0 | 0 | 0 | 1 | 1 | 0 | 0 | 0 | 0 | 0 | 0 | 0 | 0 | 0 | 0 | 1 |
| % Pedestrians | 0 | 0 | 0 | 0 | 0 | 0 | 0 | 100 | 0.5 | 0 | 0 | 0 | 0 | 0 | 0 | 0 | 0 | 0 | 0 | 0.1 |

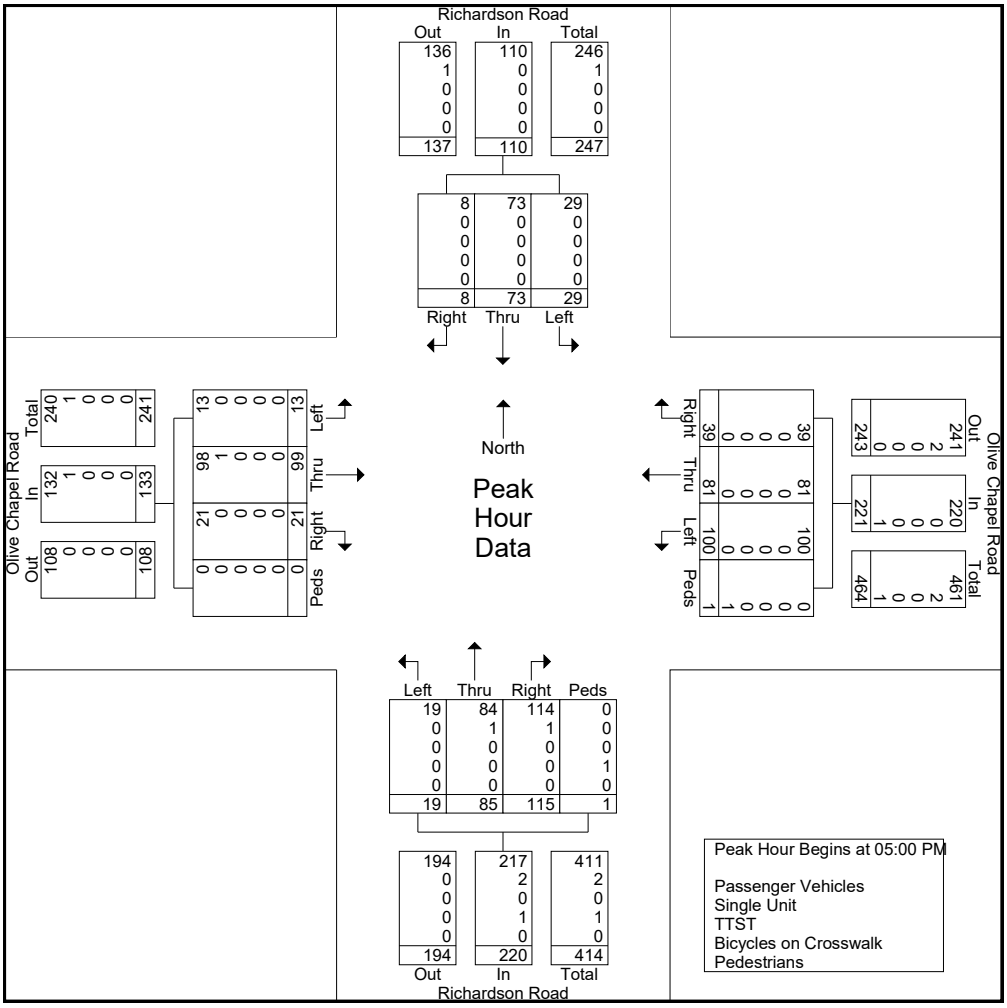

# VHB Engineering NC, P.C.

Venture I
940 Main Campus Drive, Suite 500
Raleigh, NC 27606
*p: 919.829.0328 f: 919.833.0034*


File Name : Richardson@Hasse
Site Code :
Start Date : 11/5/2020
Page No : 1

**Groups Printed- Passenger Vehicles - Single Unit - TTST - Bicycles on Crosswalk - Pedestrians**

| | Richardson Road Southbound | | | | Hasse Avenue Westbound | | | | Richardson Road Northbound | | | | Little Gem Lane Eastbound | | | | | | |
|---|---|---|---|---|---|---|---|---|---|---|---|---|---|---|---|---|---|---|---|
| Start Time | Left | Thru | Right | Peds | Left | Thru | Right | Peds | Left | Thru | Right | Peds | Left | Thru | Right | Peds | Exclu. Total | Inclu. Total | Int. Total |
| 07:00 AM | 3 | 16 | 0 | 0 | 2 | 0 | 6 | 2 | 0 | 22 | 0 | 0 | 0 | 0 | 0 | 0 | 2 | 49 | 51 |
| 07:15 AM | 6 | 16 | 0 | 2 | 1 | 0 | 8 | 1 | 0 | 36 | 1 | 0 | 0 | 0 | 0 | 0 | 3 | 68 | 71 |
| 07:30 AM | 2 | 17 | 0 | 0 | 1 | 0 | 14 | 0 | 2 | 36 | 3 | 1 | 3 | 1 | 0 | 1 | 2 | 79 | 81 |
| 07:45 AM | 5 | 23 | 0 | 0 | 3 | 0 | 13 | 1 | 0 | 26 | 2 | 0 | 1 | 0 | 1 | 1 | 2 | 74 | 76 |
| Total | 16 | 72 | 0 | 2 | 7 | 0 | 41 | 4 | 2 | 120 | 6 | 1 | 4 | 1 | 1 | 2 | 9 | 270 | 279 |
| 08:00 AM | 9 | 17 | 0 | 0 | 2 | 0 | 11 | 0 | 1 | 35 | 3 | 0 | 0 | 0 | 0 | 1 | 1 | 78 | 79 |
| 08:15 AM | 4 | 27 | 1 | 0 | 4 | 0 | 9 | 1 | 0 | 29 | 4 | 0 | 0 | 0 | 0 | 1 | 2 | 78 | 80 |
| 08:30 AM | 6 | 22 | 0 | 0 | 3 | 0 | 9 | 1 | 0 | 36 | 1 | 0 | 1 | 0 | 0 | 1 | 2 | 78 | 80 |
| 08:45 AM | 6 | 19 | 0 | 0 | 4 | 0 | 9 | 0 | 1 | 39 | 1 | 1 | 0 | 0 | 1 | 1 | 2 | 80 | 82 |
| Total | 25 | 85 | 1 | 0 | 13 | 0 | 38 | 2 | 2 | 139 | 9 | 1 | 1 | 0 | 1 | 4 | 7 | 314 | 321 |
| *** BREAK *** | | | | | | | | | | | | | | | | | | | |
| 04:00 PM | 2 | 24 | 0 | 3 | 0 | 1 | 8 | 1 | 0 | 17 | 5 | 0 | 1 | 0 | 0 | 1 | 5 | 58 | 63 |
| 04:15 PM | 7 | 19 | 3 | 1 | 7 | 0 | 6 | 4 | 0 | 28 | 2 | 1 | 1 | 0 | 0 | 0 | 6 | 73 | 79 |
| 04:30 PM | 5 | 22 | 0 | 2 | 1 | 0 | 8 | 2 | 0 | 26 | 3 | 1 | 0 | 0 | 0 | 2 | 7 | 65 | 72 |
| 04:45 PM | 11 | 36 | 0 | 2 | 3 | 0 | 10 | 0 | 0 | 21 | 6 | 0 | 1 | 1 | 0 | 0 | 2 | 89 | 91 |
| Total | 25 | 101 | 3 | 8 | 11 | 1 | 32 | 7 | 0 | 92 | 16 | 2 | 3 | 1 | 0 | 3 | 20 | 285 | 305 |
| 05:00 PM | 10 | 33 | 0 | 2 | 2 | 0 | 7 | 0 | 0 | 33 | 6 | 0 | 1 | 0 | 1 | 0 | 2 | 93 | 95 |
| 05:15 PM | 8 | 24 | 0 | 2 | 5 | 1 | 7 | 2 | 0 | 40 | 3 | 1 | 0 | 0 | 2 | 1 | 6 | 90 | 96 |
| 05:30 PM | 9 | 42 | 3 | 0 | 3 | 0 | 9 | 0 | 2 | 32 | 5 | 0 | 0 | 0 | 0 | 1 | 1 | 105 | 106 |
| 05:45 PM | 7 | 21 | 0 | 0 | 2 | 0 | 3 | 0 | 2 | 27 | 5 | 0 | 0 | 0 | 1 | 0 | 0 | 68 | 68 |
| Total | 34 | 120 | 3 | 4 | 12 | 1 | 26 | 2 | 4 | 132 | 19 | 1 | 1 | 0 | 4 | 2 | 9 | 356 | 365 |
| Grand Total | 100 | 378 | 7 | 14 | 43 | 2 | 137 | 15 | 8 | 483 | 50 | 5 | 9 | 2 | 6 | 11 | 45 | 1225 | 1270 |
| Apprch % | 20.6 | 77.9 | 1.4 | | 23.6 | 1.1 | 75.3 | | 1.5 | 89.3 | 9.2 | | 52.9 | 11.8 | 35.3 | | | | |
| Total % | 8.2 | 30.9 | 0.6 | | 3.5 | 0.2 | 11.2 | | 0.7 | 39.4 | 4.1 | | 0.7 | 0.2 | 0.5 | | 3.5 | 96.5 | |
| Passenger Vehicles | 98 | 365 | 6 | | 41 | 2 | 136 | | 8 | 467 | 49 | | 8 | 0 | 6 | | 0 | 0 | 1186 |
| % Passenger Vehicles | 98 | 96.6 | 85.7 | 0 | 95.3 | 100 | 99.3 | 0 | 100 | 96.7 | 98 | 0 | 88.9 | 0 | 100 | 0 | 0 | 0 | 93.4 |
| Single Unit | 2 | 6 | 1 | | 2 | 0 | 1 | | 0 | 10 | 1 | | 1 | 1 | 0 | | 0 | 0 | 25 |
| % Single Unit | 2 | 1.6 | 14.3 | 0 | 4.7 | 0 | 0.7 | 0 | 0 | 2.1 | 2 | 0 | 11.1 | 50 | 0 | 0 | 0 | 0 | 2 |
| TTST | 0 | 7 | 0 | | 0 | 0 | 0 | | 0 | 6 | 0 | | 0 | 1 | 0 | | 0 | 0 | 14 |
| % TTST | 0 | 1.9 | 0 | 0 | 0 | 0 | 0 | 0 | 0 | 1.2 | 0 | 0 | 0 | 50 | 0 | 0 | 0 | 0 | 1.1 |
| Bicycles on Crosswalk | 0 | 0 | 0 | | 0 | 0 | 0 | | 0 | 0 | 0 | | 0 | 0 | 0 | | 0 | 0 | 2 |
| % Bicycles on Crosswalk | 0 | 0 | 0 | 7.1 | 0 | 0 | 0 | 0 | 0 | 0 | 0 | 20 | 0 | 0 | 0 | 0 | 0 | 0 | 0.2 |
| Pedestrians | 0 | 0 | 0 | | 0 | 0 | 0 | | 0 | 0 | 0 | | 0 | 0 | 0 | | 0 | 0 | 43 |
| % Pedestrians | 0 | 0 | 0 | 92.9 | 0 | 0 | 0 | 100 | 0 | 0 | 0 | 80 | 0 | 0 | 0 | 100 | 0 | 0 | 3.4 |

# VHB Engineering NC, P.C.

Venture I
940 Main Campus Drive, Suite 500
Raleigh, NC 27606
*p: 919.829.0328 f: 919.833.0034*


File Name : Richardson@Hasse
Site Code :
Start Date : 11/5/2020
Page No : 2

| | Richardson Road Southbound | | | | Hasse Avenue Westbound | | | | Richardson Road Northbound | | | | Little Gem Lane Eastbound | | | | |
|---|---|---|---|---|---|---|---|---|---|---|---|---|---|---|---|---|---|
| Start Time | Left | Thru | Right | App. Total | Left | Thru | Right | App. Total | Left | Thru | Right | App. Total | Left | Thru | Right | App. Total | Int. Total |
| Peak Hour Analysis From 07:00 AM to 12:30 PM - Peak 1 of 1 | | | | | | | | | | | | | | | | | |
| Peak Hour for Entire Intersection Begins at 08:00 AM | | | | | | | | | | | | | | | | | |
| 08:00 AM | 9 | 17 | 0 | 26 | 2 | 0 | 11 | 13 | 1 | 35 | 3 | 39 | 0 | 0 | 0 | 0 | 78 |
| 08:15 AM | 4 | 27 | 1 | 32 | 4 | 0 | 9 | 13 | 0 | 29 | 4 | 33 | 0 | 0 | 0 | 0 | 78 |
| 08:30 AM | 6 | 22 | 0 | 28 | 3 | 0 | 9 | 12 | 0 | 36 | 1 | 37 | 1 | 0 | 0 | 1 | 78 |
| 08:45 AM | 6 | 19 | 0 | 25 | 4 | 0 | 9 | 13 | 1 | 39 | 1 | 41 | 0 | 0 | 1 | 1 | 80 |
| Total Volume | 25 | 85 | 1 | 111 | 13 | 0 | 38 | 51 | 2 | 139 | 9 | 150 | 1 | 0 | 1 | 2 | 314 |
| % App. Total | 22.5 | 76.6 | 0.9 | | 25.5 | 0 | 74.5 | | 1.3 | 92.7 | 6 | | 50 | 0 | 50 | | |
| PHF | .694 | .787 | .250 | .867 | .813 | .000 | .864 | .981 | .500 | .891 | .563 | .915 | .250 | .000 | .250 | .500 | .981 |
| Passenger Vehicles | 24 | 81 | 0 | 105 | 12 | 0 | 38 | 50 | 2 | 134 | 8 | 144 | 1 | 0 | 1 | 2 | 301 |
| % Passenger Vehicles | 96.0 | 95.3 | 0 | 94.6 | 92.3 | 0 | 100 | 98.0 | 100 | 96.4 | 88.9 | 96.0 | 100 | 0 | 100 | 100 | 95.9 |
| Single Unit | 1 | 1 | 1 | 3 | 1 | 0 | 0 | 1 | 0 | 5 | 1 | 6 | 0 | 0 | 0 | 0 | 10 |
| % Single Unit | 4.0 | 1.2 | 100 | 2.7 | 7.7 | 0 | 0 | 2.0 | 0 | 3.6 | 11.1 | 4.0 | 0 | 0 | 0 | 0 | 3.2 |
| TTST | 0 | 3 | 0 | 3 | 0 | 0 | 0 | 0 | 0 | 0 | 0 | 0 | 0 | 0 | 0 | 0 | 3 |
| % TTST | 0 | 3.5 | 0 | 2.7 | 0 | 0 | 0 | 0 | 0 | 0 | 0 | 0 | 0 | 0 | 0 | 0 | 1.0 |
| Bicycles on Crosswalk | 0 | 0 | 0 | 0 | 0 | 0 | 0 | 0 | 0 | 0 | 0 | 0 | 0 | 0 | 0 | 0 | 0 |
| % Bicycles on Crosswalk | 0 | 0 | 0 | 0 | 0 | 0 | 0 | 0 | 0 | 0 | 0 | 0 | 0 | 0 | 0 | 0 | 0 |
| Pedestrians | 0 | 0 | 0 | 0 | 0 | 0 | 0 | 0 | 0 | 0 | 0 | 0 | 0 | 0 | 0 | 0 | 0 |
| % Pedestrians | 0 | 0 | 0 | 0 | 0 | 0 | 0 | 0 | 0 | 0 | 0 | 0 | 0 | 0 | 0 | 0 | 0 |

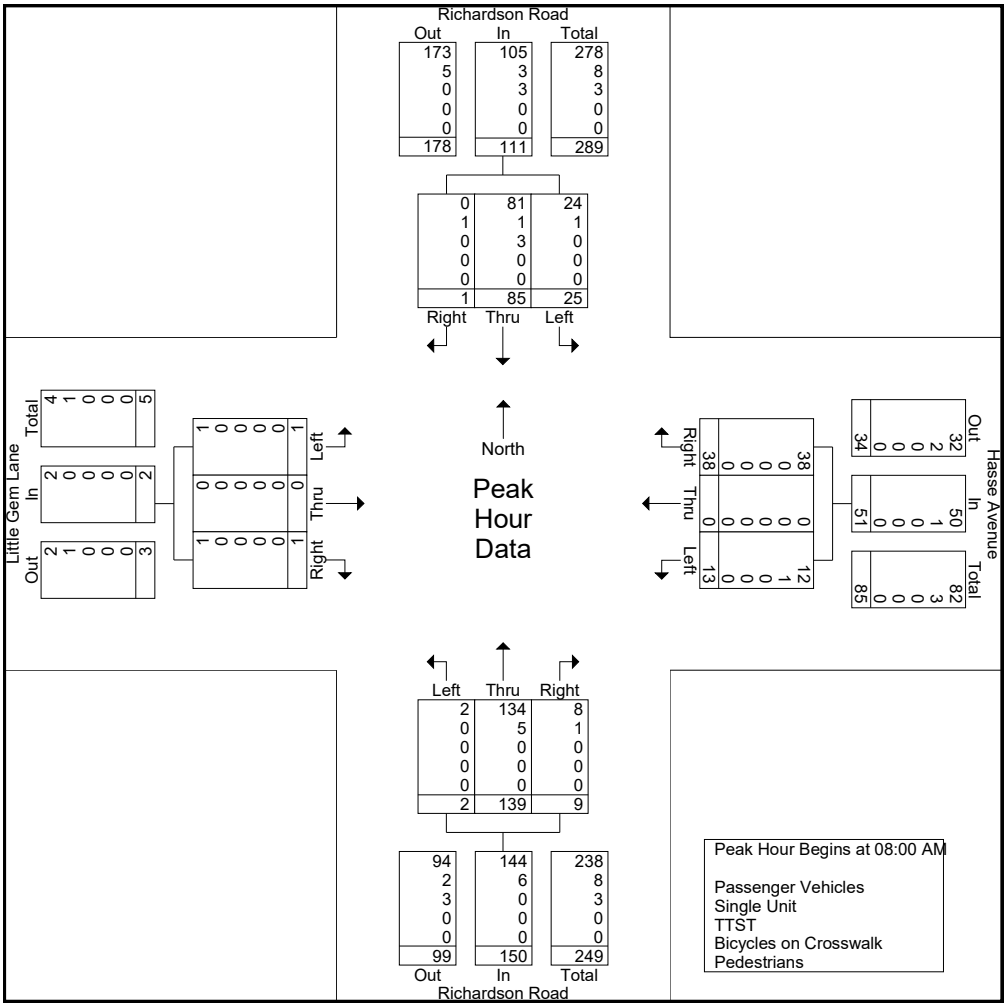

# VHB Engineering NC, P.C.

Venture I
940 Main Campus Drive, Suite 500
Raleigh, NC 27606
*p: 919.829.0328 f: 919.833.0034*


File Name : Richardson@Hasse
Site Code :
Start Date : 11/5/2020
Page No : 3

| | Richardson Road Southbound | | | | Hasse Avenue Westbound | | | | Richardson Road Northbound | | | | Little Gem Lane Eastbound | | | | |
|---|---|---|---|---|---|---|---|---|---|---|---|---|---|---|---|---|---|
| Start Time | Left | Thru | Right | App. Total | Left | Thru | Right | App. Total | Left | Thru | Right | App. Total | Left | Thru | Right | App. Total | Int. Total |
| Peak Hour Analysis From 12:45 PM to 05:45 PM - Peak 1 of 1 | | | | | | | | | | | | | | | | | |
| Peak Hour for Entire Intersection Begins at 04:45 PM | | | | | | | | | | | | | | | | | |
| 04:45 PM | 11 | 36 | 0 | 47 | 3 | 0 | 10 | 13 | 0 | 21 | 6 | 27 | 1 | 1 | 0 | 2 | 89 |
| 05:00 PM | 10 | 33 | 0 | 43 | 2 | 0 | 7 | 9 | 0 | 33 | 6 | 39 | 1 | 0 | 1 | 2 | 93 |
| 05:15 PM | 8 | 24 | 0 | 32 | 5 | 1 | 7 | 13 | 0 | 40 | 3 | 43 | 0 | 0 | 2 | 2 | 90 |
| 05:30 PM | 9 | 42 | 3 | 54 | 3 | 0 | 9 | 12 | 2 | 32 | 5 | 39 | 0 | 0 | 0 | 0 | 105 |
| Total Volume | 38 | 135 | 3 | 176 | 13 | 1 | 33 | 47 | 2 | 126 | 20 | 148 | 2 | 1 | 3 | 6 | 377 |
| % App. Total | 21.6 | 76.7 | 1.7 | | 27.7 | 2.1 | 70.2 | | 1.4 | 85.1 | 13.5 | | 33.3 | 16.7 | 50 | | |
| PHF | .864 | .804 | .250 | .815 | .650 | .250 | .825 | .904 | .250 | .788 | .833 | .860 | .500 | .250 | .375 | .750 | .898 |
| Passenger Vehicles | 38 | 135 | 3 | 176 | 13 | 1 | 33 | 47 | 2 | 122 | 20 | 144 | 1 | 0 | 3 | 4 | 371 |
| % Passenger Vehicles | 100 | 100 | 100 | 100 | 100 | 100 | 100 | 100 | 100 | 96.8 | 100 | 97.3 | 50.0 | 0 | 100 | 66.7 | 98.4 |
| Single Unit | 0 | 0 | 0 | 0 | 0 | 0 | 0 | 0 | 0 | 3 | 0 | 3 | 1 | 1 | 0 | 2 | 5 |
| % Single Unit | 0 | 0 | 0 | 0 | 0 | 0 | 0 | 0 | 0 | 2.4 | 0 | 2.0 | 50.0 | 100 | 0 | 33.3 | 1.3 |
| TTST | 0 | 0 | 0 | 0 | 0 | 0 | 0 | 0 | 0 | 1 | 0 | 1 | 0 | 0 | 0 | 0 | 1 |
| % TTST | 0 | 0 | 0 | 0 | 0 | 0 | 0 | 0 | 0 | 0.8 | 0 | 0.7 | 0 | 0 | 0 | 0 | 0.3 |
| Bicycles on Crosswalk | 0 | 0 | 0 | 0 | 0 | 0 | 0 | 0 | 0 | 0 | 0 | 0 | 0 | 0 | 0 | 0 | 0 |
| % Bicycles on Crosswalk | 0 | 0 | 0 | 0 | 0 | 0 | 0 | 0 | 0 | 0 | 0 | 0 | 0 | 0 | 0 | 0 | 0 |
| Pedestrians | 0 | 0 | 0 | 0 | 0 | 0 | 0 | 0 | 0 | 0 | 0 | 0 | 0 | 0 | 0 | 0 | 0 |
| % Pedestrians | 0 | 0 | 0 | 0 | 0 | 0 | 0 | 0 | 0 | 0 | 0 | 0 | 0 | 0 | 0 | 0 | 0 |

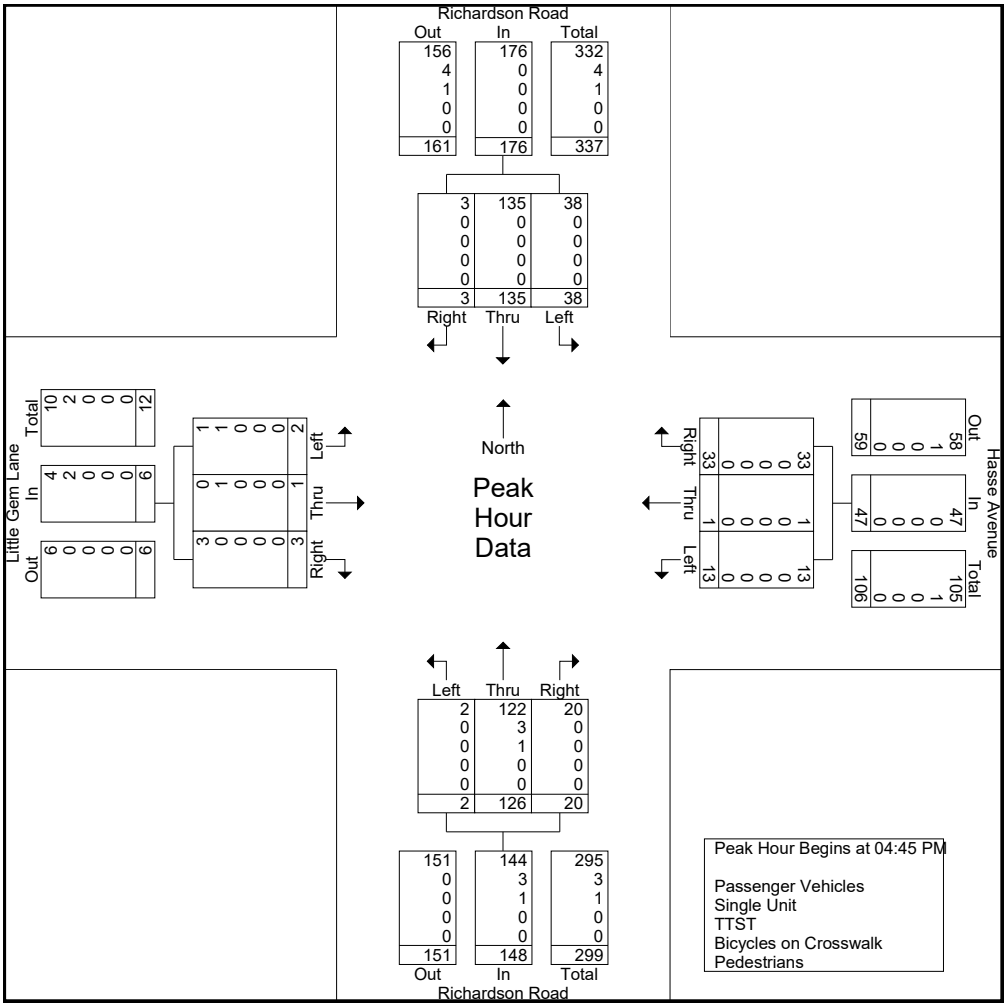

# VHB Engineering NC, P.C.

Venture I
940 Main Campus Drive, Suite 500
Raleigh, NC 27606
*p: 919.829.0328 f: 919.833.0034*


File Name : US64@Richardson
Site Code :
Start Date : 11/5/2020
Page No : 1

**Groups Printed- Passenger Vehicles - Single Unit - TTST - Bicycles on Crosswalk - Pedestrians**

| | Jenks Road Southbound | | | | US 64 Westbound | | | | Richardson Avenue Northbound | | | | US 64 Eastbound | | | | | | |
|---|---|---|---|---|---|---|---|---|---|---|---|---|---|---|---|---|---|---|---|
| Start Time | Left | Thru | Right | Peds | Left | Thru | Right | Peds | Left | Thru | Right | Peds | Left | Thru | Right | Peds | Exclu. Total | Inclu. Total | Int. Total |
| 07:00 AM | 0 | 0 | 19 | 0 | 22 | 174 | 18 | 0 | 0 | 0 | 31 | 0 | 17 | 228 | 1 | 0 | 0 | 510 | 510 |
| 07:15 AM | 0 | 0 | 29 | 0 | 38 | 222 | 10 | 0 | 0 | 0 | 55 | 0 | 31 | 239 | 4 | 0 | 0 | 628 | 628 |
| 07:30 AM | 0 | 0 | 13 | 0 | 22 | 244 | 16 | 0 | 0 | 0 | 67 | 0 | 19 | 275 | 5 | 0 | 0 | 661 | 661 |
| 07:45 AM | 0 | 0 | 21 | 0 | 41 | 257 | 17 | 0 | 0 | 0 | 55 | 0 | 15 | 257 | 6 | 0 | 0 | 669 | 669 |
| Total | 0 | 0 | 82 | 0 | 123 | 897 | 61 | 0 | 0 | 0 | 208 | 0 | 82 | 999 | 16 | 0 | 0 | 2468 | 2468 |
| 08:00 AM | 0 | 0 | 25 | 0 | 40 | 210 | 15 | 0 | 0 | 0 | 67 | 0 | 12 | 249 | 6 | 0 | 0 | 624 | 624 |
| 08:15 AM | 0 | 0 | 25 | 0 | 39 | 230 | 25 | 0 | 0 | 0 | 43 | 0 | 17 | 226 | 6 | 0 | 0 | 611 | 611 |
| 08:30 AM | 0 | 0 | 22 | 0 | 31 | 242 | 21 | 0 | 0 | 0 | 55 | 0 | 14 | 209 | 4 | 0 | 0 | 598 | 598 |
| 08:45 AM | 0 | 0 | 18 | 0 | 24 | 185 | 17 | 0 | 0 | 0 | 59 | 0 | 17 | 192 | 5 | 0 | 0 | 517 | 517 |
| Total | 0 | 0 | 90 | 0 | 134 | 867 | 78 | 0 | 0 | 0 | 224 | 0 | 60 | 876 | 21 | 0 | 0 | 2350 | 2350 |
| *** BREAK *** | | | | | | | | | | | | | | | | | | | |
| 04:00 PM | 0 | 0 | 29 | 0 | 29 | 280 | 11 | 0 | 0 | 0 | 39 | 0 | 14 | 223 | 6 | 0 | 0 | 631 | 631 |
| 04:15 PM | 0 | 0 | 30 | 0 | 41 | 295 | 11 | 0 | 0 | 0 | 43 | 0 | 21 | 226 | 6 | 0 | 0 | 673 | 673 |
| 04:30 PM | 0 | 0 | 26 | 0 | 35 | 271 | 11 | 0 | 0 | 0 | 53 | 0 | 14 | 268 | 4 | 0 | 0 | 682 | 682 |
| 04:45 PM | 0 | 0 | 25 | 0 | 59 | 255 | 21 | 0 | 0 | 0 | 45 | 0 | 16 | 238 | 6 | 0 | 0 | 665 | 665 |
| Total | 0 | 0 | 110 | 0 | 164 | 1101 | 54 | 0 | 0 | 0 | 180 | 0 | 65 | 955 | 22 | 0 | 0 | 2651 | 2651 |
| 05:00 PM | 0 | 0 | 41 | 0 | 52 | 313 | 17 | 0 | 0 | 0 | 51 | 0 | 17 | 291 | 6 | 0 | 0 | 788 | 788 |
| 05:15 PM | 0 | 0 | 42 | 0 | 42 | 330 | 24 | 0 | 0 | 0 | 50 | 0 | 16 | 297 | 7 | 0 | 0 | 808 | 808 |
| 05:30 PM | 0 | 0 | 40 | 0 | 60 | 281 | 16 | 0 | 0 | 0 | 60 | 0 | 24 | 262 | 12 | 0 | 0 | 755 | 755 |
| 05:45 PM | 0 | 0 | 37 | 0 | 42 | 265 | 13 | 0 | 0 | 0 | 42 | 0 | 17 | 282 | 5 | 0 | 0 | 703 | 703 |
| Total | 0 | 0 | 160 | 0 | 196 | 1189 | 70 | 0 | 0 | 0 | 203 | 0 | 74 | 1132 | 30 | 0 | 0 | 3054 | 3054 |
| Grand Total | 0 | 0 | 442 | 0 | 617 | 4054 | 263 | 0 | 0 | 0 | 815 | 0 | 281 | 3962 | 89 | 0 | 0 | 10523 | 10523 |
| Apprch % | 0 | 0 | 100 | | 12.5 | 82.2 | 5.3 | | 0 | 0 | 100 | | 6.5 | 91.5 | 2.1 | | | | |
| Total % | 0 | 0 | 4.2 | | 5.9 | 38.5 | 2.5 | | 0 | 0 | 7.7 | | 2.7 | 37.7 | 0.8 | | 0 | 100 | |
| Passenger Vehicles | 0 | 0 | 417 | | 599 | 3775 | 234 | | 0 | 0 | 788 | | 265 | 3716 | 82 | | 0 | 0 | 9876 |
| % Passenger Vehicles | 0 | 0 | 94.3 | 0 | 97.1 | 93.1 | 89 | 0 | 0 | 0 | 96.7 | 0 | 94.3 | 93.8 | 92.1 | 0 | 0 | 0 | 93.9 |
| Single Unit | 0 | 0 | 22 | | 13 | 163 | 23 | | 0 | 0 | 23 | | 11 | 105 | 7 | | 0 | 0 | 367 |
| % Single Unit | 0 | 0 | 5 | 0 | 2.1 | 4 | 8.7 | 0 | 0 | 0 | 2.8 | 0 | 3.9 | 2.7 | 7.9 | 0 | 0 | 0 | 3.5 |
| TTST | 0 | 0 | 3 | | 5 | 116 | 6 | | 0 | 0 | 4 | | 5 | 141 | 0 | | 0 | 0 | 280 |
| % TTST | 0 | 0 | 0.7 | 0 | 0.8 | 2.9 | 2.3 | 0 | 0 | 0 | 0.5 | 0 | 1.8 | 3.6 | 0 | 0 | 0 | 0 | 2.7 |
| Bicycles on Crosswalk | 0 | 0 | 0 | | 0 | 0 | 0 | | 0 | 0 | 0 | | 0 | 0 | 0 | | 0 | 0 | 0 |
| % Bicycles on Crosswalk | 0 | 0 | 0 | 0 | 0 | 0 | 0 | 0 | 0 | 0 | 0 | 0 | 0 | 0 | 0 | 0 | 0 | 0 | 0 |
| Pedestrians | 0 | 0 | 0 | | 0 | 0 | 0 | | 0 | 0 | 0 | | 0 | 0 | 0 | | 0 | 0 | 0 |
| % Pedestrians | 0 | 0 | 0 | 0 | 0 | 0 | 0 | 0 | 0 | 0 | 0 | 0 | 0 | 0 | 0 | 0 | 0 | 0 | 0 |

# VHB Engineering NC, P.C.

Venture I
940 Main Campus Drive, Suite 500
Raleigh, NC 27606
*p: 919.829.0328 f: 919.833.0034*


File Name : US64@Richardson
Site Code :
Start Date : 11/5/2020
Page No : 2

| | Jenks Road Southbound | | | | US 64 Westbound | | | | Richardson Avenue Northbound | | | | US 64 Eastbound | | | | |
|---|---|---|---|---|---|---|---|---|---|---|---|---|---|---|---|---|---|
| Start Time | Left | Thru | Right | App. Total | Left | Thru | Right | App. Total | Left | Thru | Right | App. Total | Left | Thru | Right | App. Total | Int. Total |
| Peak Hour Analysis From 07:00 AM to 11:45 AM - Peak 1 of 1 | | | | | | | | | | | | | | | | | |
| Peak Hour for Entire Intersection Begins at 07:15 AM | | | | | | | | | | | | | | | | | |
| 07:15 AM | 0 | 0 | 29 | 29 | 38 | 222 | 10 | 270 | 0 | 0 | 55 | 55 | 31 | 239 | 4 | 274 | 628 |
| 07:30 AM | 0 | 0 | 13 | 13 | 22 | 244 | 16 | 282 | 0 | 0 | 67 | 67 | 19 | 275 | 5 | 299 | 661 |
| 07:45 AM | 0 | 0 | 21 | 21 | 41 | 257 | 17 | 315 | 0 | 0 | 55 | 55 | 15 | 257 | 6 | 278 | 669 |
| 08:00 AM | 0 | 0 | 25 | 25 | 40 | 210 | 15 | 265 | 0 | 0 | 67 | 67 | 12 | 249 | 6 | 267 | 624 |
| Total Volume | 0 | 0 | 88 | 88 | 141 | 933 | 58 | 1132 | 0 | 0 | 244 | 244 | 77 | 1020 | 21 | 1118 | 2582 |
| % App. Total | 0 | 0 | 100 | | 12.5 | 82.4 | 5.1 | | 0 | 0 | 100 | | 6.9 | 91.2 | 1.9 | | |
| PHF | .000 | .000 | .759 | .759 | .860 | .908 | .853 | .898 | .000 | .000 | .910 | .910 | .621 | .927 | .875 | .935 | .965 |
| Passenger Vehicles | 0 | 0 | 82 | 82 | 135 | 844 | 45 | 1024 | 0 | 0 | 236 | 236 | 71 | 948 | 19 | 1038 | 2380 |
| % Passenger Vehicles | 0 | 0 | 93.2 | 93.2 | 95.7 | 90.5 | 77.6 | 90.5 | 0 | 0 | 96.7 | 96.7 | 92.2 | 92.9 | 90.5 | 92.8 | 92.2 |
| Single Unit | 0 | 0 | 5 | 5 | 5 | 50 | 11 | 66 | 0 | 0 | 4 | 4 | 3 | 28 | 2 | 33 | 108 |
| % Single Unit | 0 | 0 | 5.7 | 5.7 | 3.5 | 5.4 | 19.0 | 5.8 | 0 | 0 | 1.6 | 1.6 | 3.9 | 2.7 | 9.5 | 3.0 | 4.2 |
| TTST | 0 | 0 | 1 | 1 | 1 | 39 | 2 | 42 | 0 | 0 | 4 | 4 | 3 | 44 | 0 | 47 | 94 |
| % TTST | 0 | 0 | 1.1 | 1.1 | 0.7 | 4.2 | 3.4 | 3.7 | 0 | 0 | 1.6 | 1.6 | 3.9 | 4.3 | 0 | 4.2 | 3.6 |
| Bicycles on Crosswalk | 0 | 0 | 0 | 0 | 0 | 0 | 0 | 0 | 0 | 0 | 0 | 0 | 0 | 0 | 0 | 0 | 0 |
| % Bicycles on Crosswalk | 0 | 0 | 0 | 0 | 0 | 0 | 0 | 0 | 0 | 0 | 0 | 0 | 0 | 0 | 0 | 0 | 0 |
| Pedestrians | 0 | 0 | 0 | 0 | 0 | 0 | 0 | 0 | 0 | 0 | 0 | 0 | 0 | 0 | 0 | 0 | 0 |
| % Pedestrians | 0 | 0 | 0 | 0 | 0 | 0 | 0 | 0 | 0 | 0 | 0 | 0 | 0 | 0 | 0 | 0 | 0 |

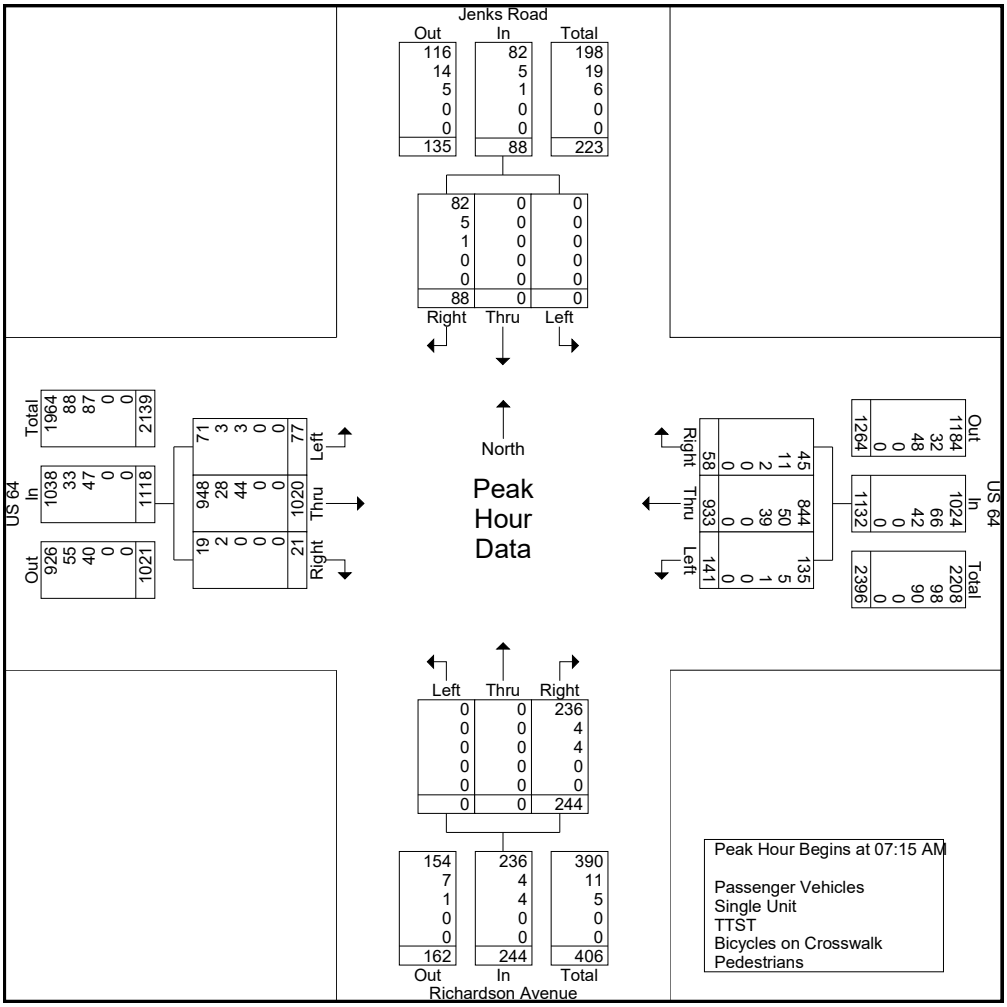

# VHB Engineering NC, P.C.

Venture I
940 Main Campus Drive, Suite 500
Raleigh, NC 27606
*p: 919.829.0328 f: 919.833.0034*


File Name : US64@Richardson
Site Code :
Start Date : 11/5/2020
Page No : 3

| | Jenks Road Southbound | | | | US 64 Westbound | | | | Richardson Avenue Northbound | | | | US 64 Eastbound | | | | |
|---|---|---|---|---|---|---|---|---|---|---|---|---|---|---|---|---|---|
| Start Time | Left | Thru | Right | App. Total | Left | Thru | Right | App. Total | Left | Thru | Right | App. Total | Left | Thru | Right | App. Total | Int. Total |
| Peak Hour Analysis From 12:00 PM to 05:45 PM - Peak 1 of 1 | | | | | | | | | | | | | | | | | |
| Peak Hour for Entire Intersection Begins at 05:00 PM | | | | | | | | | | | | | | | | | |
| 05:00 PM | 0 | 0 | 41 | 41 | 52 | 313 | 17 | 382 | 0 | 0 | 51 | 51 | 17 | 291 | 6 | 314 | 788 |
| 05:15 PM | 0 | 0 | 42 | 42 | 42 | 330 | 24 | 396 | 0 | 0 | 50 | 50 | 16 | 297 | 7 | 320 | 808 |
| 05:30 PM | 0 | 0 | 40 | 40 | 60 | 281 | 16 | 357 | 0 | 0 | 60 | 60 | 24 | 262 | 12 | 298 | 755 |
| 05:45 PM | 0 | 0 | 37 | 37 | 42 | 265 | 13 | 320 | 0 | 0 | 42 | 42 | 17 | 282 | 5 | 304 | 703 |
| Total Volume | 0 | 0 | 160 | 160 | 196 | 1189 | 70 | 1455 | 0 | 0 | 203 | 203 | 74 | 1132 | 30 | 1236 | 3054 |
| % App. Total | 0 | 0 | 100 | | 13.5 | 81.7 | 4.8 | | 0 | 0 | 100 | | 6 | 91.6 | 2.4 | | |
| PHF | .000 | .000 | .952 | .952 | .817 | .901 | .729 | .919 | .000 | .000 | .846 | .846 | .771 | .953 | .625 | .966 | .945 |
| Passenger Vehicles | 0 | 0 | 156 | 156 | 195 | 1149 | 67 | 1411 | 0 | 0 | 197 | 197 | 74 | 1099 | 30 | 1203 | 2967 |
| % Passenger Vehicles | 0 | 0 | 97.5 | 97.5 | 99.5 | 96.6 | 95.7 | 97.0 | 0 | 0 | 97.0 | 97.0 | 100 | 97.1 | 100 | 97.3 | 97.2 |
| Single Unit | 0 | 0 | 4 | 4 | 1 | 23 | 2 | 26 | 0 | 0 | 6 | 6 | 0 | 25 | 0 | 25 | 61 |
| % Single Unit | 0 | 0 | 2.5 | 2.5 | 0.5 | 1.9 | 2.9 | 1.8 | 0 | 0 | 3.0 | 3.0 | 0 | 2.2 | 0 | 2.0 | 2.0 |
| TTST | 0 | 0 | 0 | 0 | 0 | 17 | 1 | 18 | 0 | 0 | 0 | 0 | 0 | 8 | 0 | 8 | 26 |
| % TTST | 0 | 0 | 0 | 0 | 0 | 1.4 | 1.4 | 1.2 | 0 | 0 | 0 | 0 | 0 | 0.7 | 0 | 0.6 | 0.9 |
| Bicycles on Crosswalk | 0 | 0 | 0 | 0 | 0 | 0 | 0 | 0 | 0 | 0 | 0 | 0 | 0 | 0 | 0 | 0 | 0 |
| % Bicycles on Crosswalk | 0 | 0 | 0 | 0 | 0 | 0 | 0 | 0 | 0 | 0 | 0 | 0 | 0 | 0 | 0 | 0 | 0 |
| Pedestrians | 0 | 0 | 0 | 0 | 0 | 0 | 0 | 0 | 0 | 0 | 0 | 0 | 0 | 0 | 0 | 0 | 0 |
| % Pedestrians | 0 | 0 | 0 | 0 | 0 | 0 | 0 | 0 | 0 | 0 | 0 | 0 | 0 | 0 | 0 | 0 | 0 |

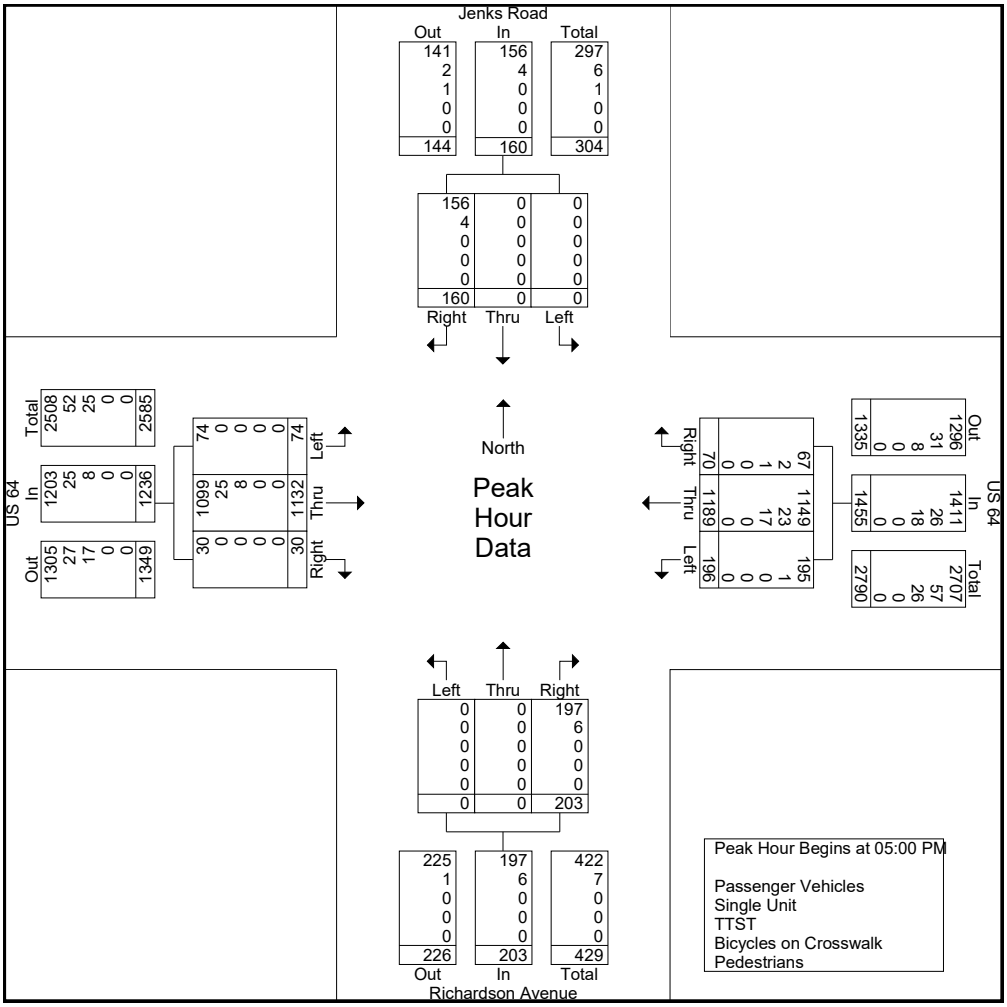

# VHB Engineering NC, P.C.

Venture I
940 Main Campus Drive, Suite 500
Raleigh, NC 27606
*p: 919.829.0328 f: 919.833.0034*


File Name : US64@U-turn_E_Richardson
Site Code :
Start Date : 11/5/2020
Page No : 1

**Groups Printed- Passenger Vehicles - Single Unit - TTST - Bicycles on Crosswalk - Pedestrians**

| | No Approach Southbound | | | | US 64 Westbound | | | | No Approach Northbound | | | | US 64 Eastbound | | | | | | |
|---|---|---|---|---|---|---|---|---|---|---|---|---|---|---|---|---|---|---|---|
| Start Time | Left | Thru | Right | Peds | Left | Thru | Right | Peds | Left | Thru | Right | Peds | U-Turn | Thru | Right | Peds | Exclu. Total | Inclu. Total | Int. Total |
| 07:00 AM | 0 | 0 | 1 | 0 | 0 | 218 | 0 | 0 | 0 | 0 | 0 | 0 | 2 | 247 | 0 | 0 | 0 | 468 | 468 |
| 07:15 AM | 0 | 0 | 0 | 0 | 0 | 268 | 0 | 0 | 0 | 0 | 0 | 0 | 5 | 302 | 0 | 0 | 0 | 575 | 575 |
| 07:30 AM | 0 | 0 | 3 | 0 | 0 | 278 | 0 | 0 | 0 | 0 | 0 | 0 | 8 | 315 | 0 | 0 | 0 | 604 | 604 |
| 07:45 AM | 0 | 0 | 0 | 0 | 0 | 309 | 0 | 0 | 0 | 0 | 0 | 0 | 4 | 272 | 0 | 0 | 0 | 585 | 585 |
| Total | 0 | 0 | 4 | 0 | 0 | 1073 | 0 | 0 | 0 | 0 | 0 | 0 | 19 | 1136 | 0 | 0 | 0 | 2232 | 2232 |
| 08:00 AM | 0 | 0 | 0 | 0 | 0 | 273 | 0 | 0 | 0 | 0 | 0 | 0 | 7 | 331 | 0 | 0 | 0 | 611 | 611 |
| 08:15 AM | 0 | 0 | 0 | 0 | 0 | 283 | 0 | 0 | 0 | 0 | 0 | 0 | 8 | 264 | 0 | 0 | 0 | 555 | 555 |
| 08:30 AM | 0 | 0 | 0 | 0 | 0 | 305 | 0 | 0 | 0 | 0 | 0 | 0 | 6 | 261 | 0 | 0 | 0 | 572 | 572 |
| 08:45 AM | 0 | 0 | 0 | 0 | 0 | 203 | 0 | 0 | 0 | 0 | 0 | 0 | 7 | 239 | 0 | 0 | 0 | 449 | 449 |
| Total | 0 | 0 | 0 | 0 | 0 | 1064 | 0 | 0 | 0 | 0 | 0 | 0 | 28 | 1095 | 0 | 0 | 0 | 2187 | 2187 |
| *** BREAK *** | | | | | | | | | | | | | | | | | | | |
| 04:00 PM | 0 | 0 | 0 | 0 | 0 | 324 | 0 | 0 | 0 | 0 | 0 | 0 | 6 | 263 | 0 | 0 | 0 | 593 | 593 |
| 04:15 PM | 0 | 0 | 0 | 0 | 0 | 349 | 0 | 0 | 0 | 0 | 0 | 0 | 5 | 266 | 0 | 0 | 0 | 620 | 620 |
| 04:30 PM | 0 | 0 | 0 | 0 | 0 | 303 | 0 | 0 | 0 | 0 | 0 | 0 | 9 | 311 | 0 | 0 | 0 | 623 | 623 |
| 04:45 PM | 0 | 0 | 0 | 0 | 0 | 330 | 0 | 0 | 0 | 0 | 0 | 0 | 7 | 277 | 0 | 0 | 0 | 614 | 614 |
| Total | 0 | 0 | 0 | 0 | 0 | 1306 | 0 | 0 | 0 | 0 | 0 | 0 | 27 | 1117 | 0 | 0 | 0 | 2450 | 2450 |
| 05:00 PM | 0 | 0 | 3 | 0 | 0 | 376 | 0 | 0 | 0 | 0 | 0 | 0 | 10 | 341 | 0 | 0 | 0 | 730 | 730 |
| 05:15 PM | 0 | 0 | 1 | 0 | 0 | 394 | 0 | 0 | 0 | 0 | 0 | 0 | 10 | 334 | 0 | 0 | 0 | 739 | 739 |
| 05:30 PM | 0 | 0 | 2 | 0 | 0 | 363 | 0 | 0 | 0 | 0 | 0 | 0 | 12 | 294 | 0 | 0 | 0 | 671 | 671 |
| 05:45 PM | 0 | 0 | 2 | 0 | 0 | 301 | 0 | 0 | 0 | 0 | 0 | 0 | 9 | 294 | 0 | 0 | 0 | 606 | 606 |
| Total | 0 | 0 | 8 | 0 | 0 | 1434 | 0 | 0 | 0 | 0 | 0 | 0 | 41 | 1263 | 0 | 0 | 0 | 2746 | 2746 |
| Grand Total | 0 | 0 | 12 | 0 | 0 | 4877 | 0 | 0 | 0 | 0 | 0 | 0 | 115 | 4611 | 0 | 0 | 0 | 9615 | 9615 |
| Apprch % | 0 | 0 | 100 | | 0 | 100 | 0 | 0 | 0 | 0 | 0 | 0 | 2.4 | 97.6 | 0 | 0 | | | |
| Total % | 0 | 0 | 0.1 | | 0 | 50.7 | 0 | 0 | 0 | 0 | 0 | 0 | 1.2 | 48 | 0 | 0 | 0 | 100 | |
| Passenger Vehicles | 0 | 0 | 8 | | 0 | 4597 | 0 | 0 | 0 | 0 | 0 | 0 | 103 | 4370 | 0 | 0 | 0 | 0 | 9078 |
| % Passenger Vehicles | 0 | 0 | 66.7 | 0 | 0 | 94.3 | 0 | 0 | 0 | 0 | 0 | 0 | 89.6 | 94.8 | 0 | 0 | 0 | 0 | 94.4 |
| Single Unit | 0 | 0 | 3 | | 0 | 157 | 0 | 0 | 0 | 0 | 0 | 0 | 11 | 125 | 0 | 0 | 0 | 0 | 296 |
| % Single Unit | 0 | 0 | 25 | 0 | 0 | 3.2 | 0 | 0 | 0 | 0 | 0 | 0 | 9.6 | 2.7 | 0 | 0 | 0 | 0 | 3.1 |
| TTST | 0 | 0 | 1 | | 0 | 123 | 0 | 0 | 0 | 0 | 0 | 0 | 1 | 116 | 0 | 0 | 0 | 0 | 241 |
| % TTST | 0 | 0 | 8.3 | 0 | 0 | 2.5 | 0 | 0 | 0 | 0 | 0 | 0 | 0.9 | 2.5 | 0 | 0 | 0 | 0 | 2.5 |
| Bicycles on Crosswalk | 0 | 0 | 0 | | 0 | 0 | 0 | 0 | 0 | 0 | 0 | 0 | 0 | 0 | 0 | 0 | 0 | 0 | 0 |
| % Bicycles on Crosswalk | 0 | 0 | 0 | 0 | 0 | 0 | 0 | 0 | 0 | 0 | 0 | 0 | 0 | 0 | 0 | 0 | 0 | 0 | 0 |
| Pedestrians | 0 | 0 | 0 | | 0 | 0 | 0 | 0 | 0 | 0 | 0 | 0 | 0 | 0 | 0 | 0 | 0 | 0 | 0 |
| % Pedestrians | 0 | 0 | 0 | 0 | 0 | 0 | 0 | 0 | 0 | 0 | 0 | 0 | 0 | 0 | 0 | 0 | 0 | 0 | 0 |

# VHB Engineering NC, P.C.

Venture I
940 Main Campus Drive, Suite 500
Raleigh, NC 27606
*p: 919.829.0328 f: 919.833.0034*


File Name : US64@U-turn_E_Richardson
Site Code :
Start Date : 11/5/2020
Page No : 2

| | No Approach Southbound | | | | US 64 Westbound | | | | | No Approach Northbound | | | | | US 64 Eastbound | | | | | |
|---|---|---|---|---|---|---|---|---|---|---|---|---|---|---|---|---|---|---|---|---|
| Start Time | Left | Thru | Right | App. Total | Left | Thru | Right | Peds | App. Total | Left | Thru | Right | Peds | App. Total | U-Turn | Thru | Right | Peds | App. Total | Int. Total |
| Peak Hour Analysis From 07:00 AM to 11:45 AM - Peak 1 of 1 | | | | | | | | | | | | | | | | | | | | |
| Peak Hour for Entire Intersection Begins at 07:15 AM | | | | | | | | | | | | | | | | | | | | |
| 07:15 AM | 0 | 0 | 0 | 0 | 0 | 268 | 0 | 0 | 268 | 0 | 0 | 0 | 0 | 0 | 5 | 302 | 0 | 0 | 307 | 575 |
| 07:30 AM | 0 | 0 | 3 | 3 | 0 | 278 | 0 | 0 | 278 | 0 | 0 | 0 | 0 | 0 | 8 | 315 | 0 | 0 | 323 | 604 |
| 07:45 AM | 0 | 0 | 0 | 0 | 0 | 309 | 0 | 0 | 309 | 0 | 0 | 0 | 0 | 0 | 4 | 272 | 0 | 0 | 276 | 585 |
| 08:00 AM | 0 | 0 | 0 | 0 | 0 | 273 | 0 | 0 | 273 | 0 | 0 | 0 | 0 | 0 | 7 | 331 | 0 | 0 | 338 | 611 |
| Total Volume | 0 | 0 | 3 | 3 | 0 | 1128 | 0 | 0 | 1128 | 0 | 0 | 0 | 0 | 0 | 24 | 1220 | 0 | 0 | 1244 | 2375 |
| % App. Total | 0 | 0 | 100 | | 0 | 100 | 0 | 0 | | 0 | 0 | 0 | 0 | | 1.9 | 98.1 | 0 | 0 | | |
| PHF | .000 | .000 | .250 | .250 | .000 | .913 | .000 | .000 | .913 | .000 | .000 | .000 | .000 | .000 | .750 | .921 | .000 | .000 | .920 | .972 |
| Passenger Vehicles | 0 | 0 | 2 | 2 | 0 | 1026 | 0 | 0 | 1026 | 0 | 0 | 0 | 0 | 0 | 22 | 1138 | 0 | 0 | 1160 | 2188 |
| % Passenger Vehicles | | | | | | | | | | | | | | | | | | | | |
| Single Unit | 0 | 0 | 1 | 1 | 0 | 59 | 0 | 0 | 59 | 0 | 0 | 0 | 0 | 0 | 2 | 39 | 0 | 0 | 41 | 101 |
| % Single Unit | 0 | 0 | 33.3 | 33.3 | 0 | 5.2 | 0 | 0 | 5.2 | 0 | 0 | 0 | 0 | 0 | 8.3 | 3.2 | 0 | 0 | 3.3 | 4.3 |
| TTST | 0 | 0 | 0 | 0 | 0 | 43 | 0 | 0 | 43 | 0 | 0 | 0 | 0 | 0 | 0 | 43 | 0 | 0 | 43 | 86 |
| % TTST | 0 | 0 | 0 | 0 | 0 | 3.8 | 0 | 0 | 3.8 | 0 | 0 | 0 | 0 | 0 | 0 | 3.5 | 0 | 0 | 3.5 | 3.6 |
| Bicycles on Crosswalk | 0 | 0 | 0 | 0 | 0 | 0 | 0 | 0 | 0 | 0 | 0 | 0 | 0 | 0 | 0 | 0 | 0 | 0 | 0 | 0 |
| % Bicycles on Crosswalk | 0 | 0 | 0 | 0 | 0 | 0 | 0 | 0 | 0 | 0 | 0 | 0 | 0 | 0 | 0 | 0 | 0 | 0 | 0 | 0 |
| Pedestrians | 0 | 0 | 0 | 0 | 0 | 0 | 0 | 0 | 0 | 0 | 0 | 0 | 0 | 0 | 0 | 0 | 0 | 0 | 0 | 0 |
| % Pedestrians | 0 | 0 | 0 | 0 | 0 | 0 | 0 | 0 | 0 | 0 | 0 | 0 | 0 | 0 | 0 | 0 | 0 | 0 | 0 | 0 |

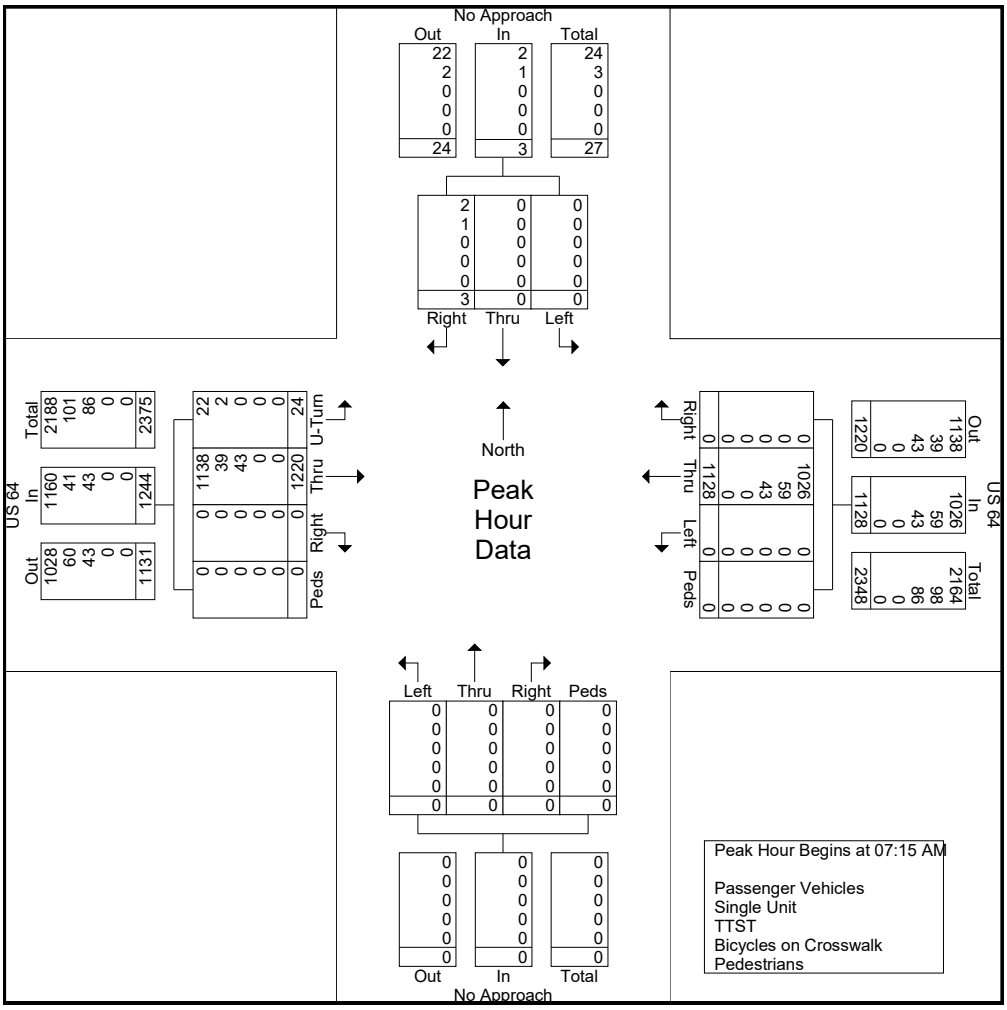

# VHB Engineering NC, P.C.

Venture I
940 Main Campus Drive, Suite 500
Raleigh, NC 27606
*p: 919.829.0328 f: 919.833.0034*


File Name : US64@U-turn_E_Richardson
Site Code :
Start Date : 11/5/2020
Page No : 3

| | No Approach Southbound | | | | US 64 Westbound | | | | | No Approach Northbound | | | | | US 64 Eastbound | | | | | |
|---|---|---|---|---|---|---|---|---|---|---|---|---|---|---|---|---|---|---|---|---|
| Start Time | Left | Thru | Right | App. Total | Left | Thru | Right | Peds | App. Total | Left | Thru | Right | Peds | App. Total | U-Turn | Thru | Right | Peds | App. Total | Int. Total |
| Peak Hour Analysis From 12:00 PM to 05:45 PM - Peak 1 of 1 | | | | | | | | | | | | | | | | | | | | |
| Peak Hour for Entire Intersection Begins at 04:45 PM | | | | | | | | | | | | | | | | | | | | |
| 04:45 PM | 0 | 0 | 0 | 0 | 0 | 330 | 0 | 0 | 330 | 0 | 0 | 0 | 0 | 0 | 7 | 277 | 0 | 0 | 284 | 614 |
| 05:00 PM | 0 | 0 | 3 | 3 | 0 | 376 | 0 | 0 | 376 | 0 | 0 | 0 | 0 | 0 | 10 | 341 | 0 | 0 | 351 | 730 |
| 05:15 PM | 0 | 0 | 1 | 1 | 0 | 394 | 0 | 0 | 394 | 0 | 0 | 0 | 0 | 0 | 10 | 334 | 0 | 0 | 344 | 739 |
| 05:30 PM | 0 | 0 | 2 | 2 | 0 | 363 | 0 | 0 | 363 | 0 | 0 | 0 | 0 | 0 | 12 | 294 | 0 | 0 | 306 | 671 |
| Total Volume | 0 | 0 | 6 | 6 | 0 | 1463 | 0 | 0 | 1463 | 0 | 0 | 0 | 0 | 0 | 39 | 1246 | 0 | 0 | 1285 | 2754 |
| % App. Total | 0 | 0 | 100 | | 0 | 100 | 0 | 0 | | 0 | 0 | 0 | 0 | | 3 | 97 | 0 | 0 | | |
| PHF | .000 | .000 | .500 | .500 | .000 | .928 | .000 | .000 | .928 | .000 | .000 | .000 | .000 | .000 | .813 | .913 | .000 | .000 | .915 | .932 |
| Passenger Vehicles | 0 | 0 | 4 | 4 | 0 | 1415 | 0 | 0 | 1415 | 0 | 0 | 0 | 0 | 0 | 34 | 1209 | 0 | 0 | 1243 | 2662 |
| % Passenger Vehicles | | | | | | | | | | | | | | | | | | | | |
| Single Unit | 0 | 0 | 1 | 1 | 0 | 30 | 0 | 0 | 30 | 0 | 0 | 0 | 0 | 0 | 4 | 25 | 0 | 0 | 29 | 60 |
| % Single Unit | 0 | 0 | 16.7 | 16.7 | 0 | 2.1 | 0 | 0 | 2.1 | 0 | 0 | 0 | 0 | 0 | 10.3 | 2.0 | 0 | 0 | 2.3 | 2.2 |
| TTST | 0 | 0 | 1 | 1 | 0 | 18 | 0 | 0 | 18 | 0 | 0 | 0 | 0 | 0 | 1 | 12 | 0 | 0 | 13 | 32 |
| % TTST | 0 | 0 | 16.7 | 16.7 | 0 | 1.2 | 0 | 0 | 1.2 | 0 | 0 | 0 | 0 | 0 | 2.6 | 1.0 | 0 | 0 | 1.0 | 1.2 |
| Bicycles on Crosswalk | 0 | 0 | 0 | 0 | 0 | 0 | 0 | 0 | 0 | 0 | 0 | 0 | 0 | 0 | 0 | 0 | 0 | 0 | 0 | 0 |
| % Bicycles on Crosswalk | 0 | 0 | 0 | 0 | 0 | 0 | 0 | 0 | 0 | 0 | 0 | 0 | 0 | 0 | 0 | 0 | 0 | 0 | 0 | 0 |
| Pedestrians | 0 | 0 | 0 | 0 | 0 | 0 | 0 | 0 | 0 | 0 | 0 | 0 | 0 | 0 | 0 | 0 | 0 | 0 | 0 | 0 |
| % Pedestrians | 0 | 0 | 0 | 0 | 0 | 0 | 0 | 0 | 0 | 0 | 0 | 0 | 0 | 0 | 0 | 0 | 0 | 0 | 0 | 0 |

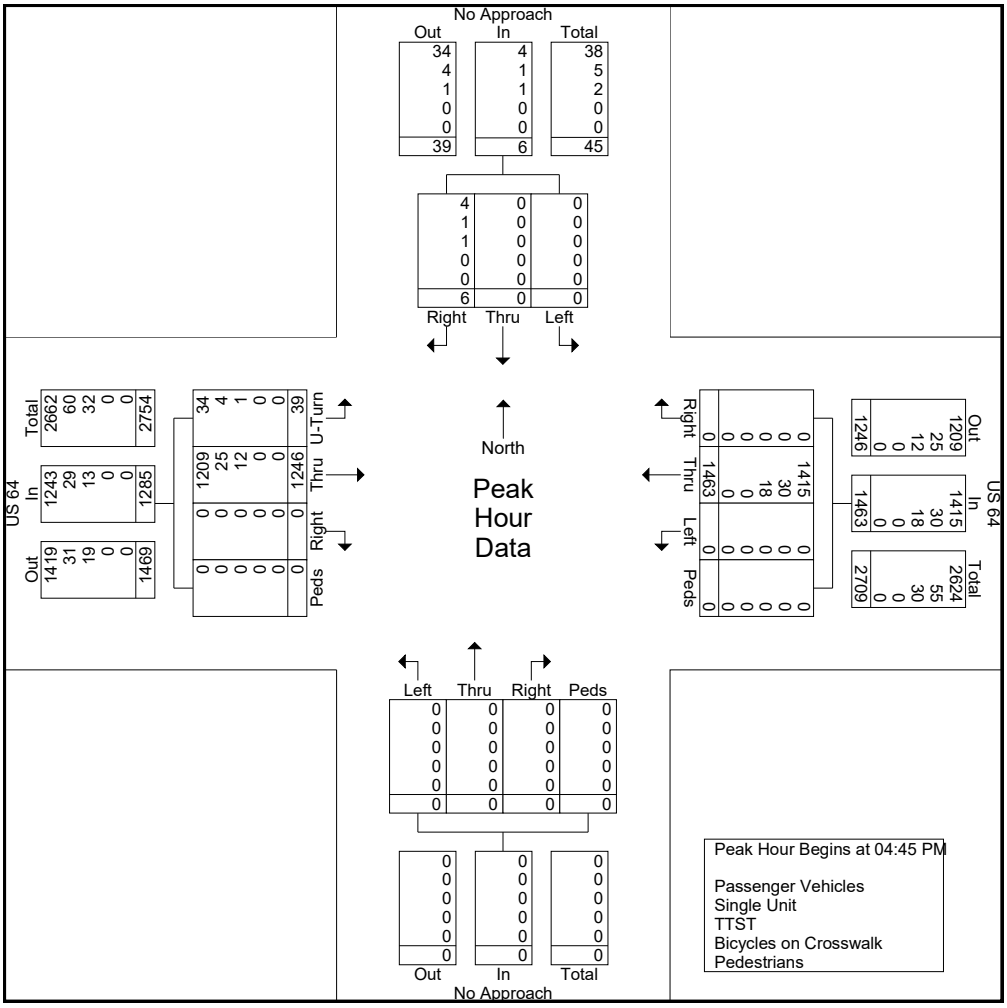

# APPENDIX C:

# Background Projects

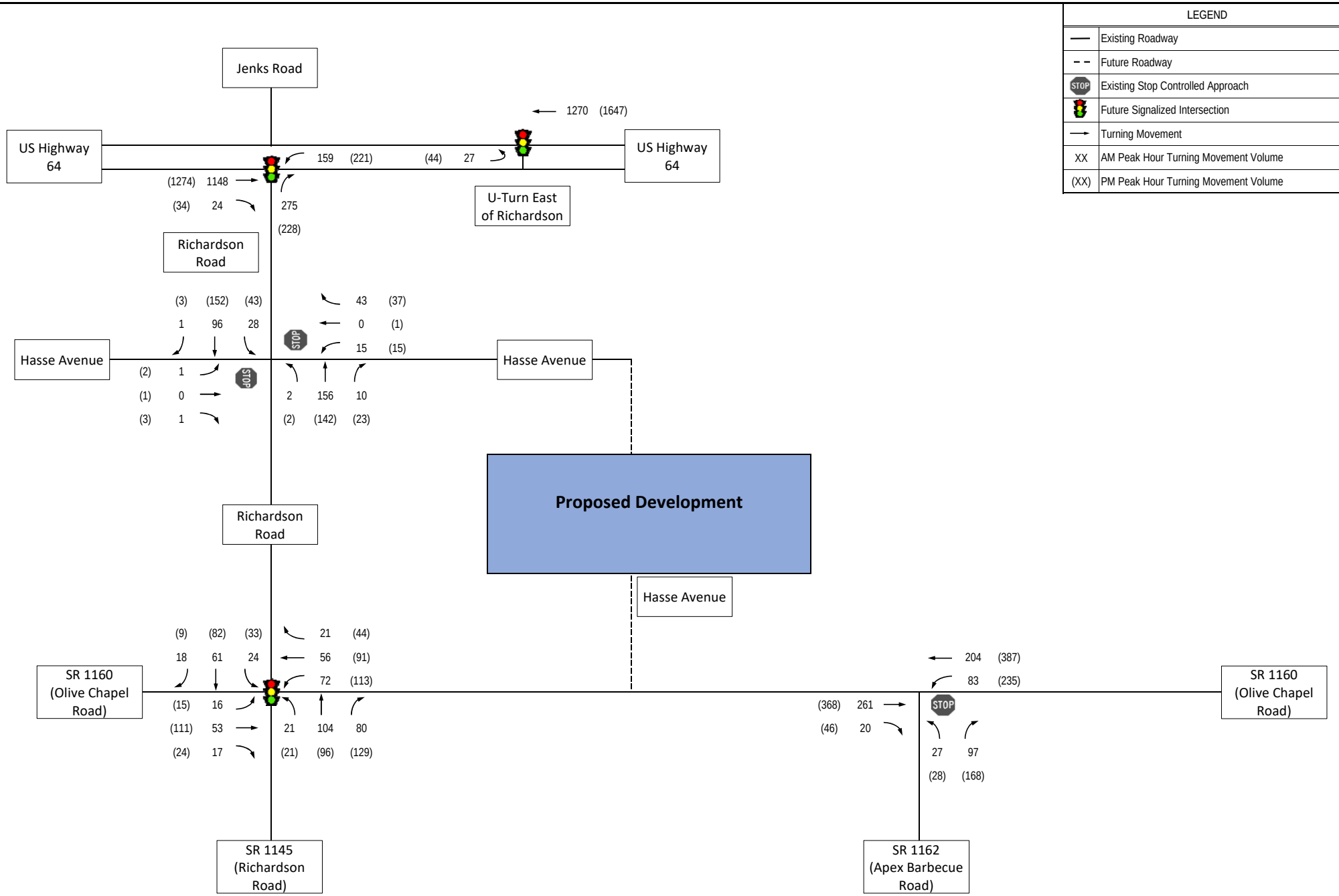


**Background (2020) AM and P[illegible] Turning Movement Volumes**



**Hackney Tract Subdivision**
**Apex, NC**

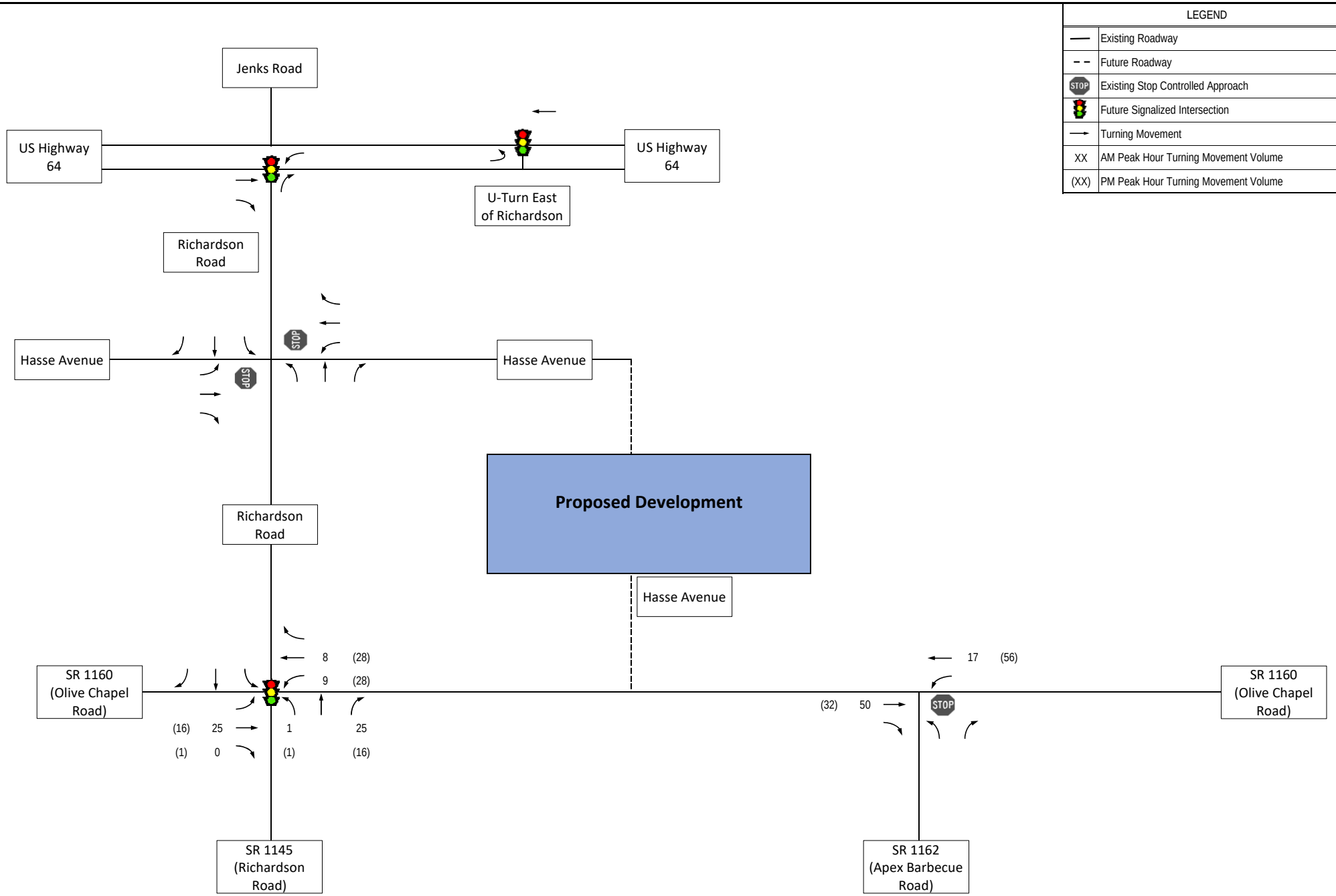


**Total Site Trips Due to S (Lawrence Assemblage)**



**Hackney Tract Subdivision**
**Apex, NC**

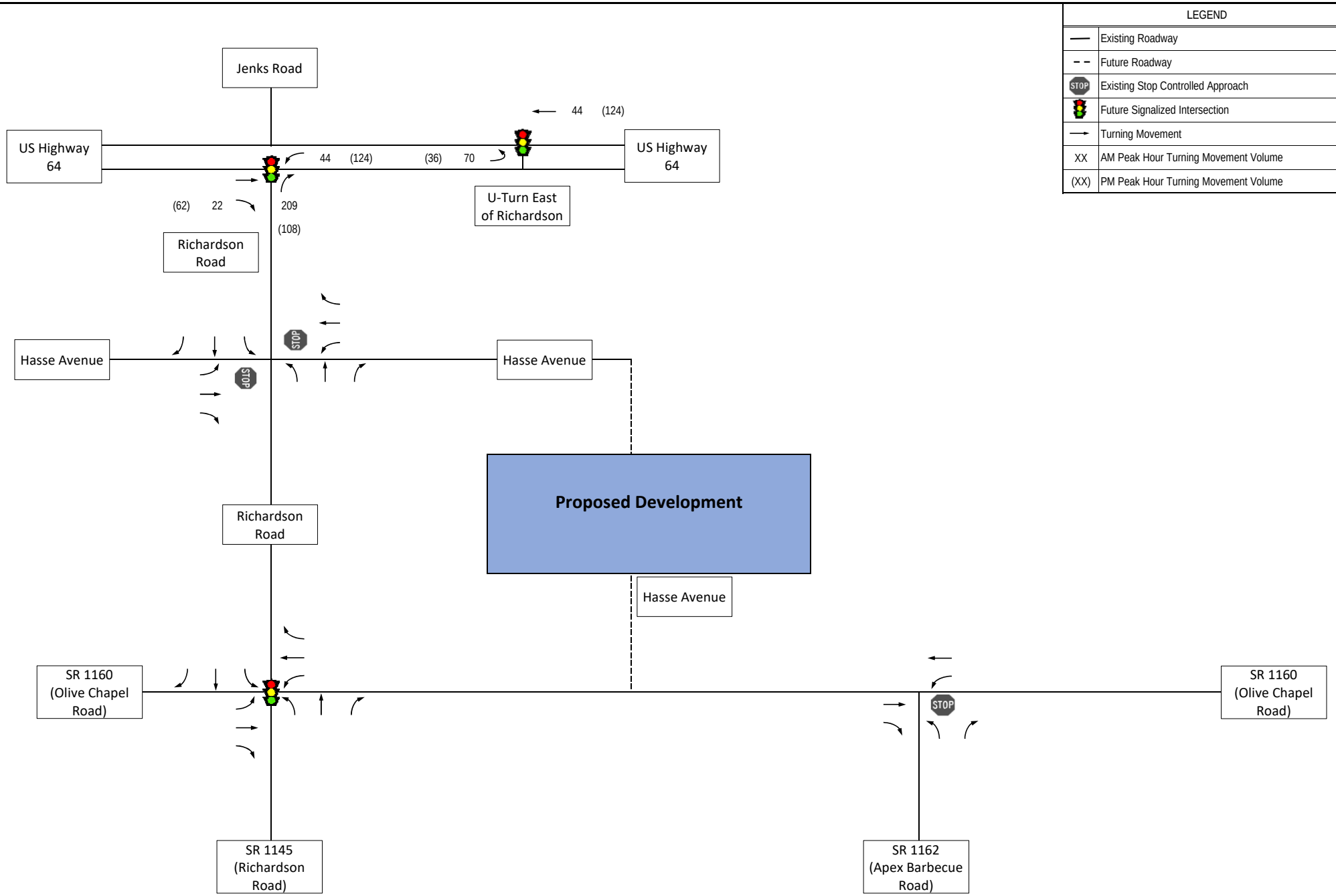




**Residential Si to Sweetwater**

**Hackney Tract Subdivision**
**Apex, NC**

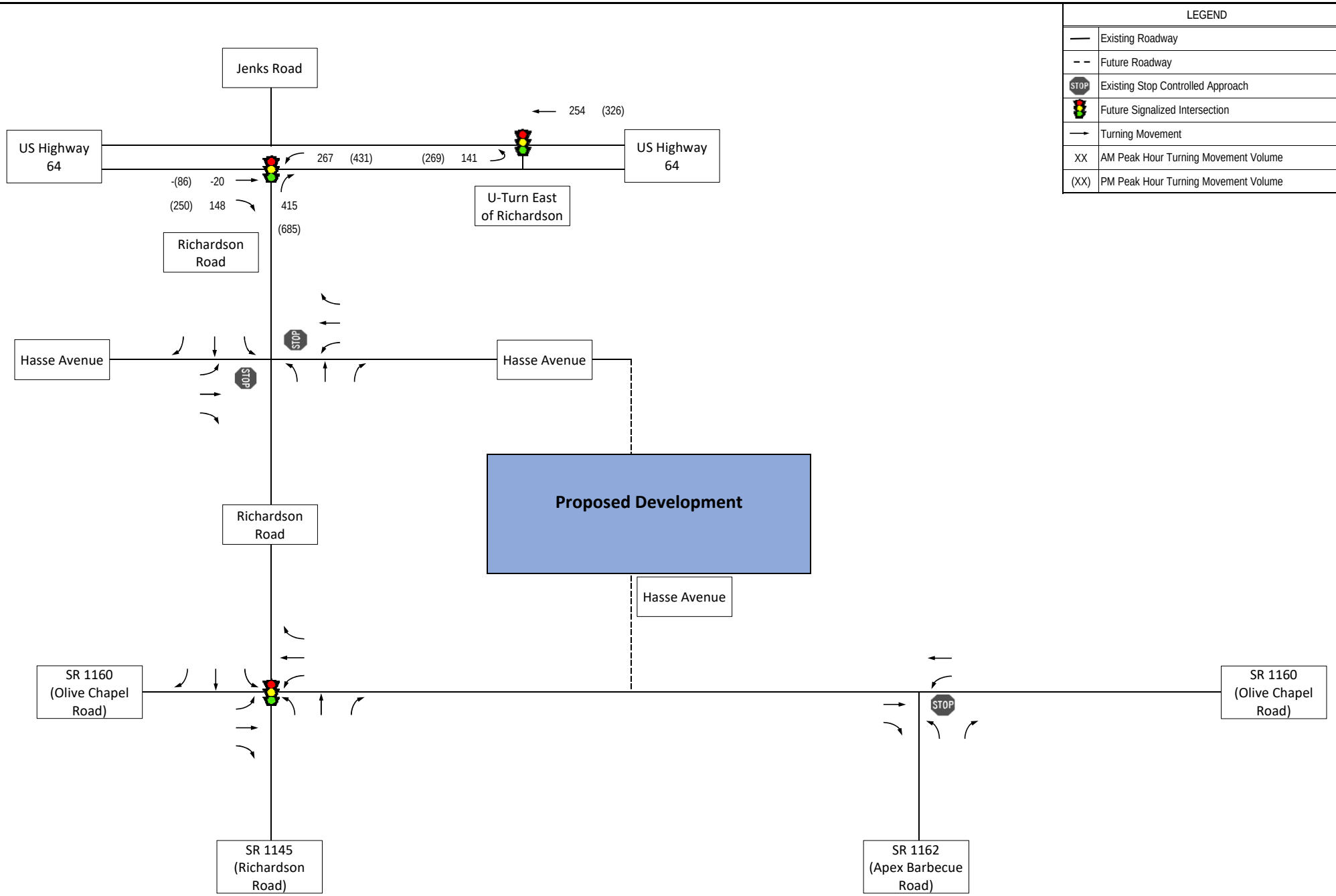


vhb

**Total Site T… Sweetwater**



**Hackney Tract Subdivision**
**Apex, NC**

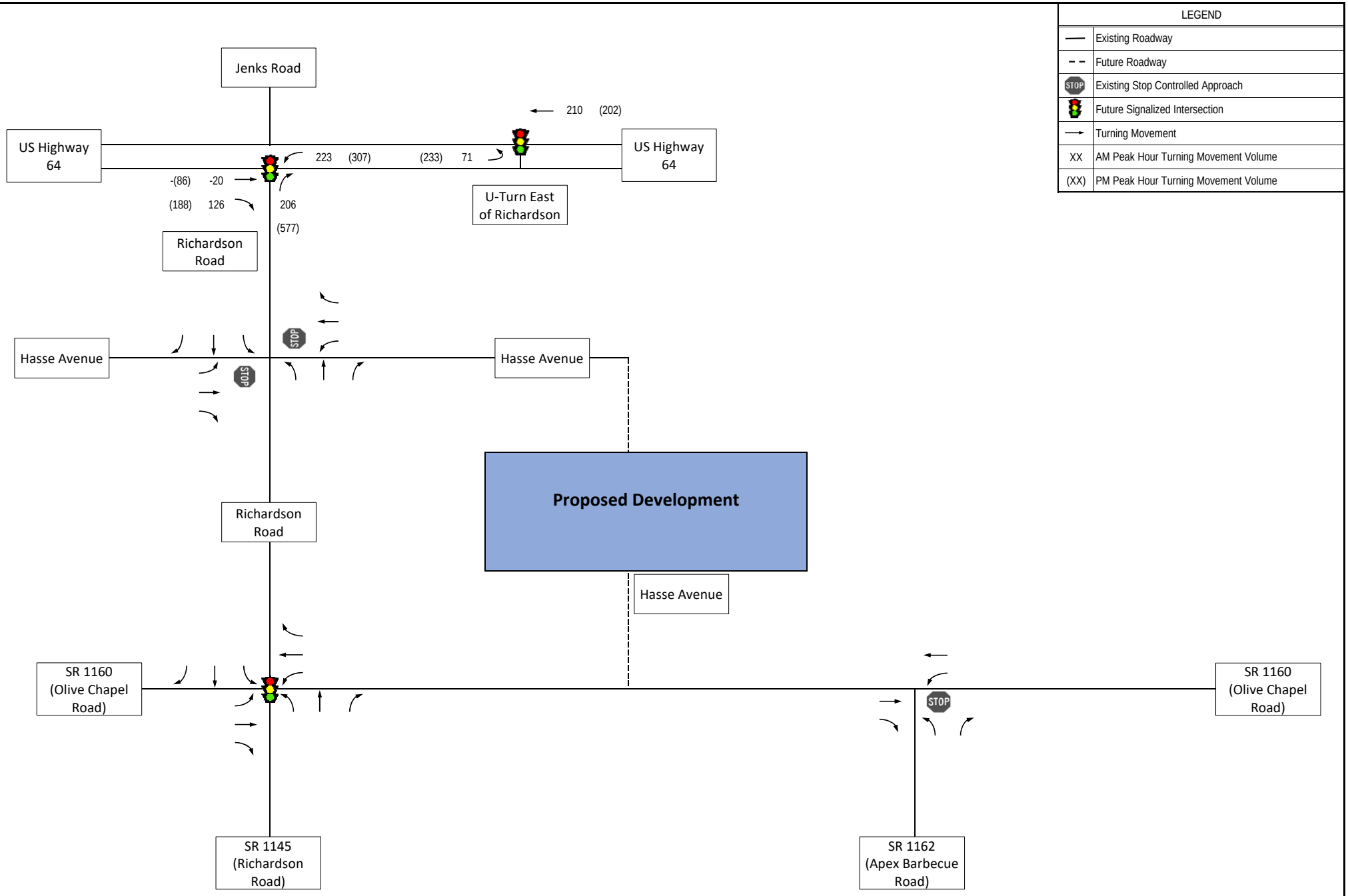




Mixed-Use Sit o Sweetwater

Hackney Tract Subdivision
Apex, NC

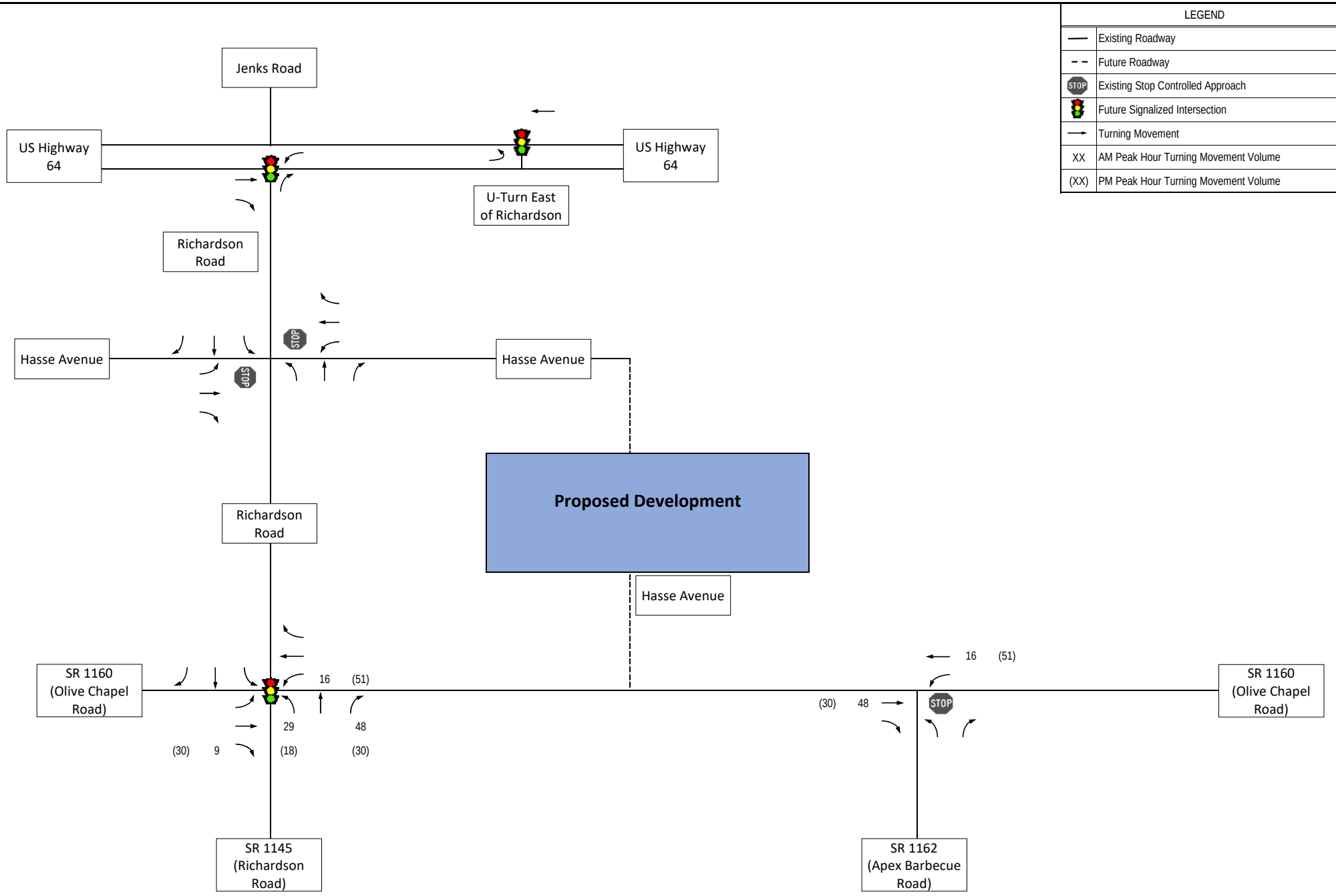


vhb

**Site Trips Due to Buck ve (Goodwin-MacNair)**



**Hackney Tract Subdivision**
**Apex, NC**

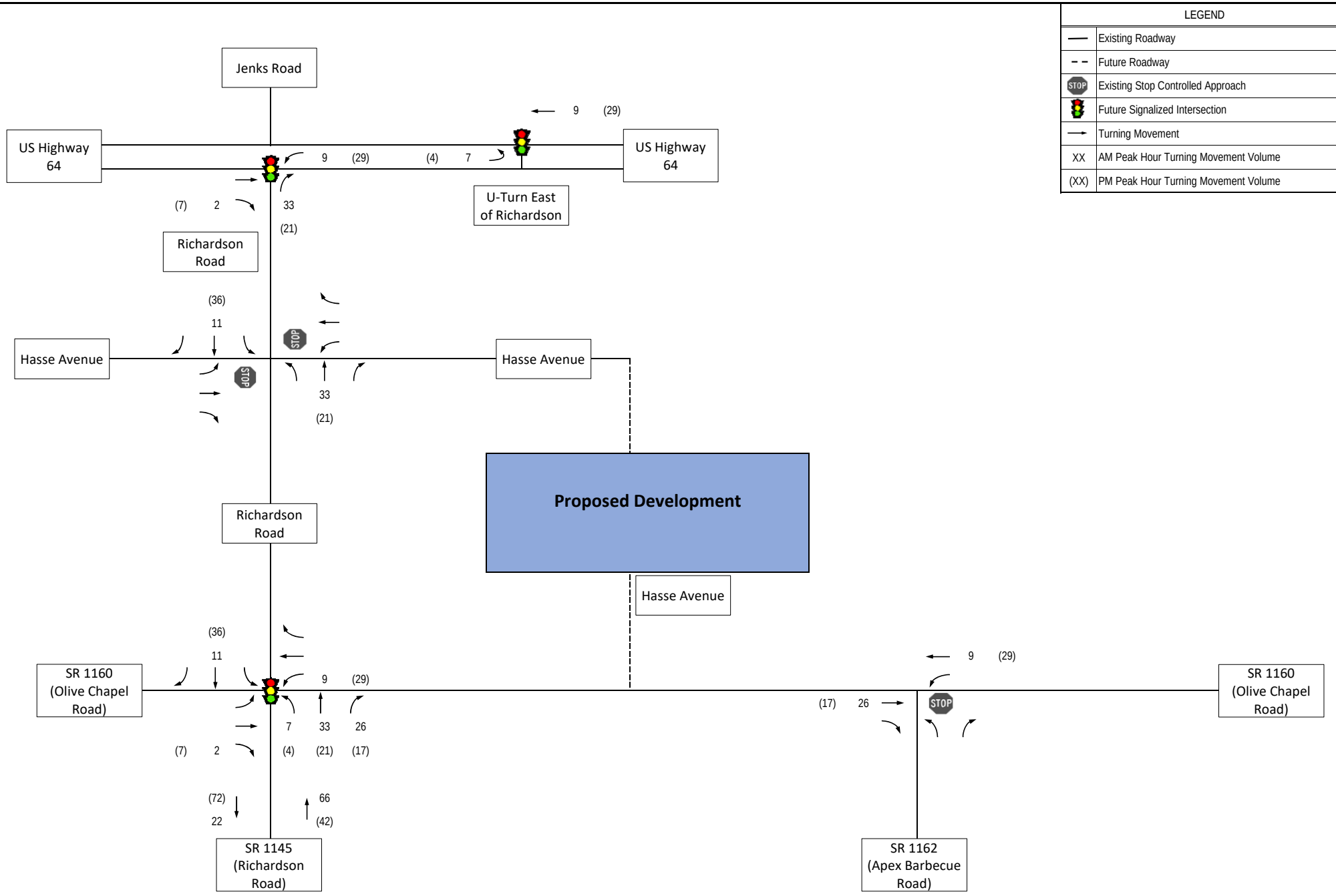




Site Trips D[illegible]er (Womble)

Hackney Tract Subdivision
Apex, NC

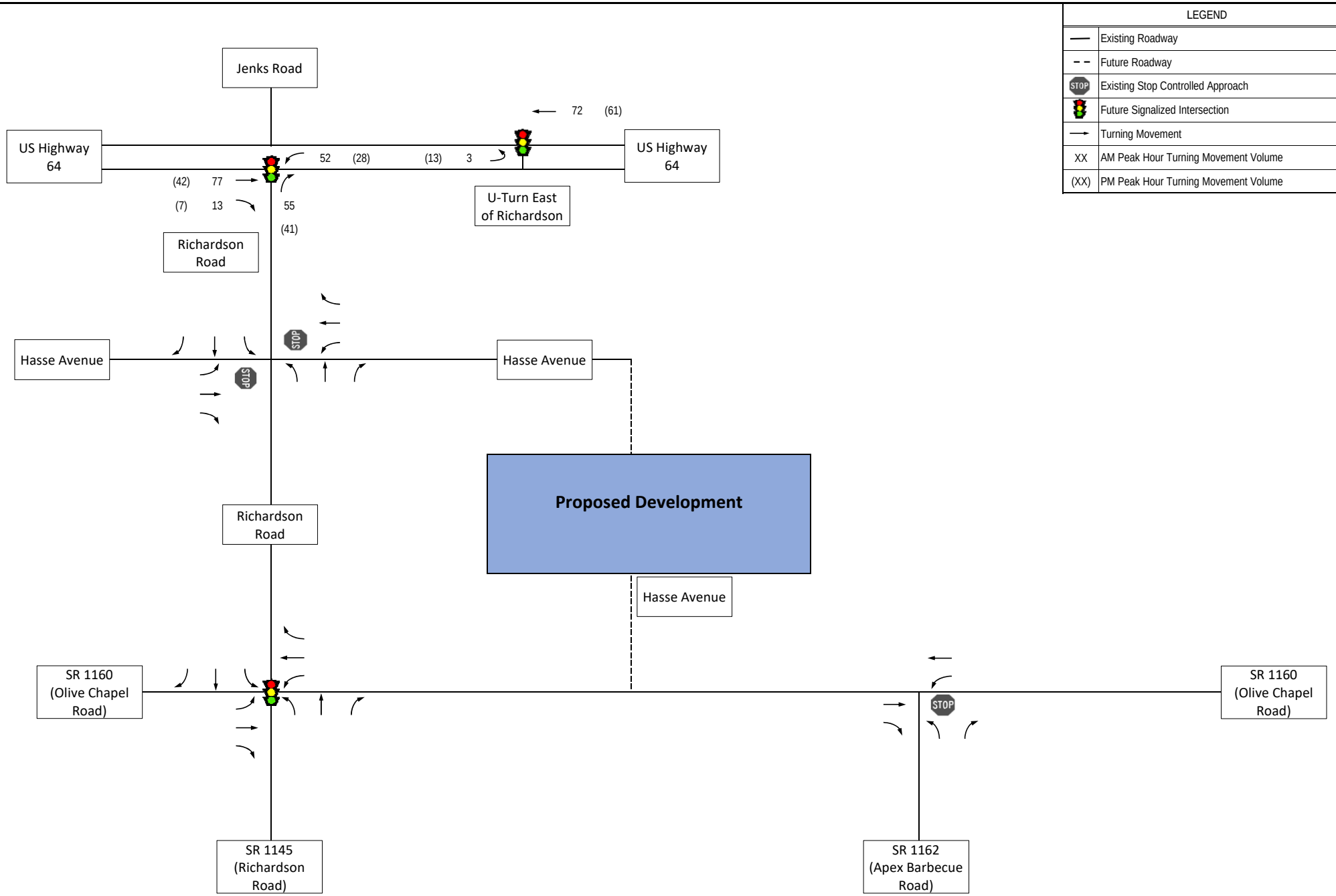


Site Tr[illegible]estford



Hackney Tract Subdivision
Apex, NC

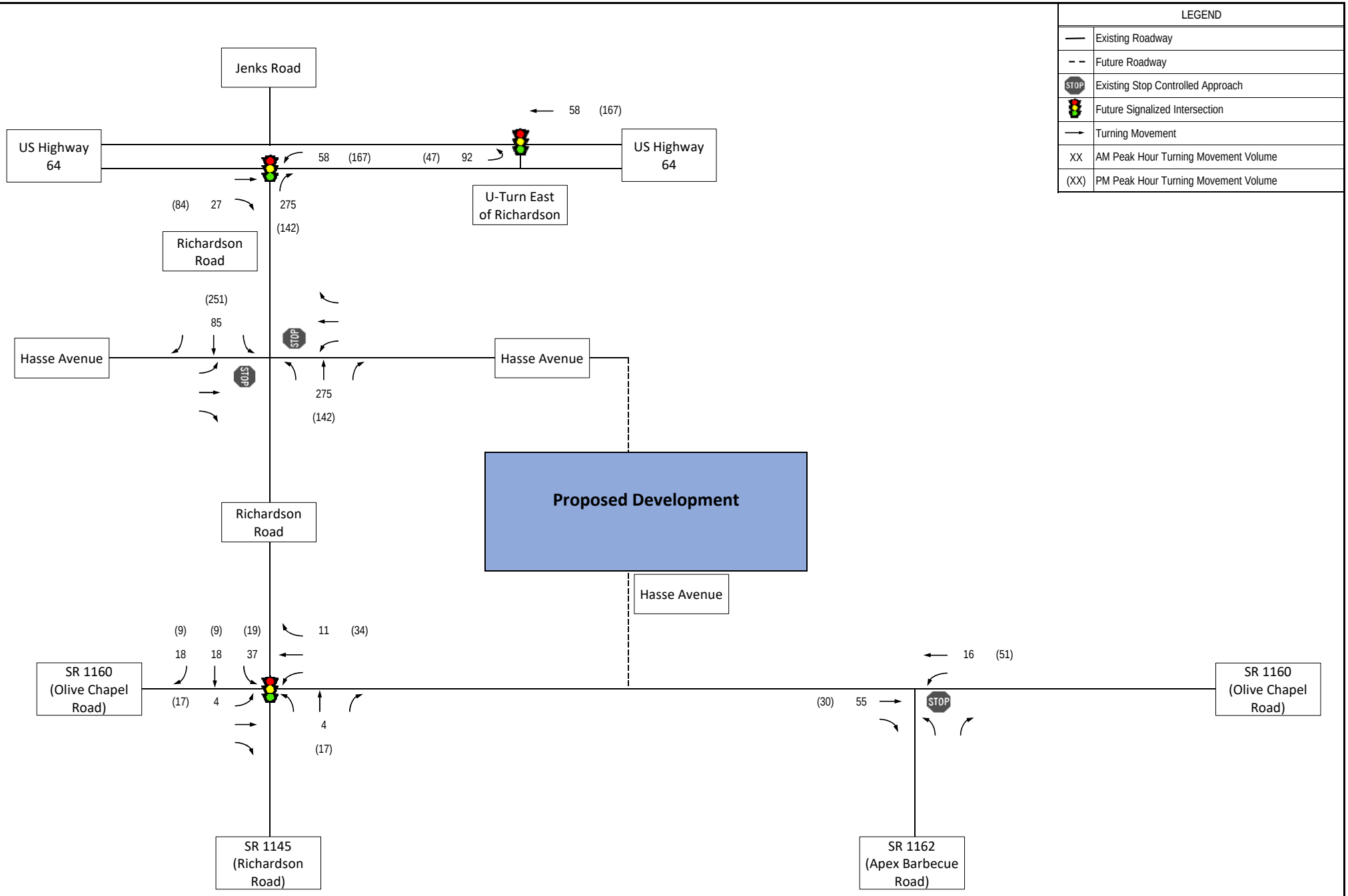




**Residential Si to Smith Farm**

**Hackney Tract Subdivision**
**Apex, NC**

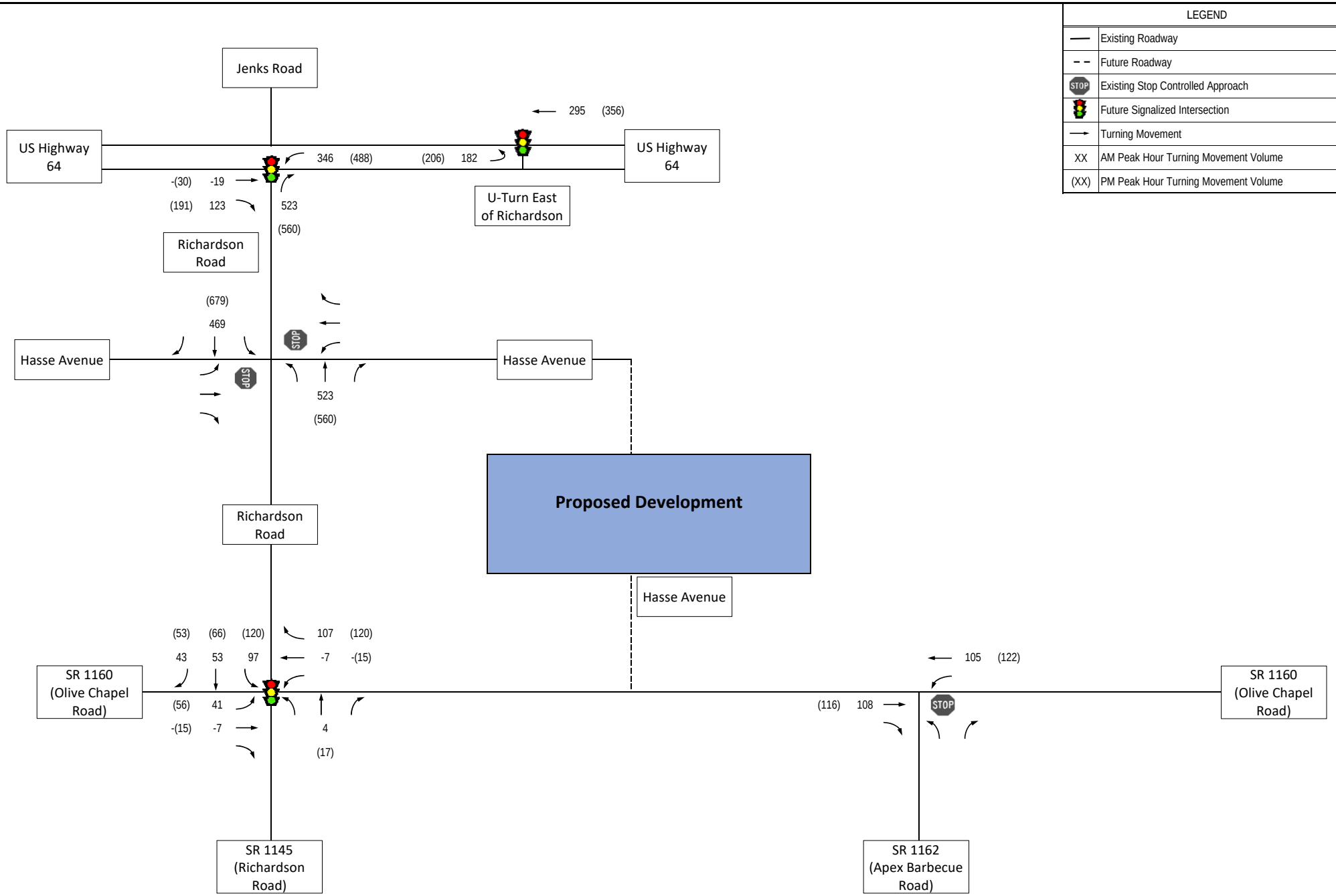




Total Site T… Smith Farm

Hackney Tract Subdivision
Apex, NC

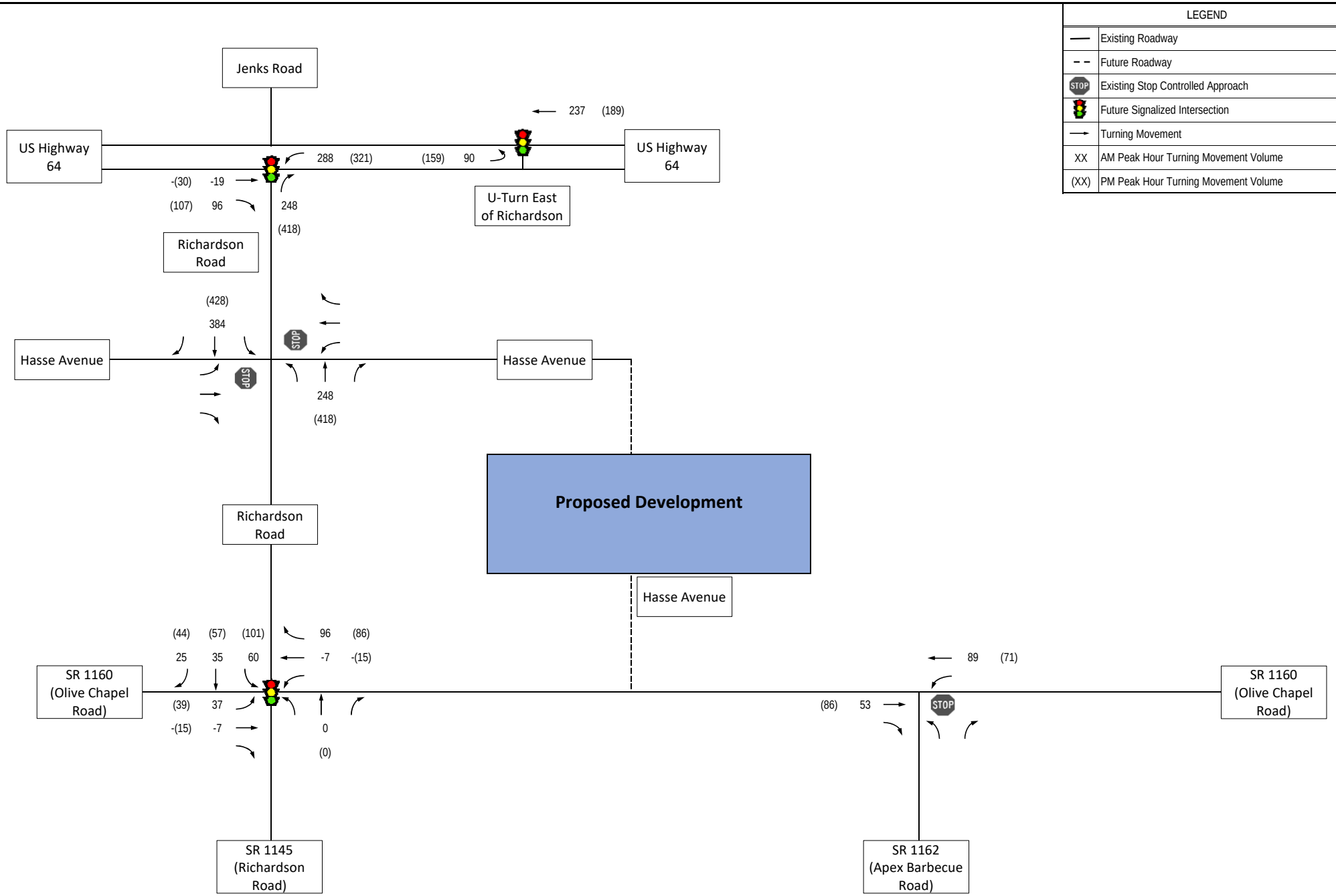




Mixed-Use Sit[illegible]o Smith Farm

Hackney Tract Subdivision
Apex, NC

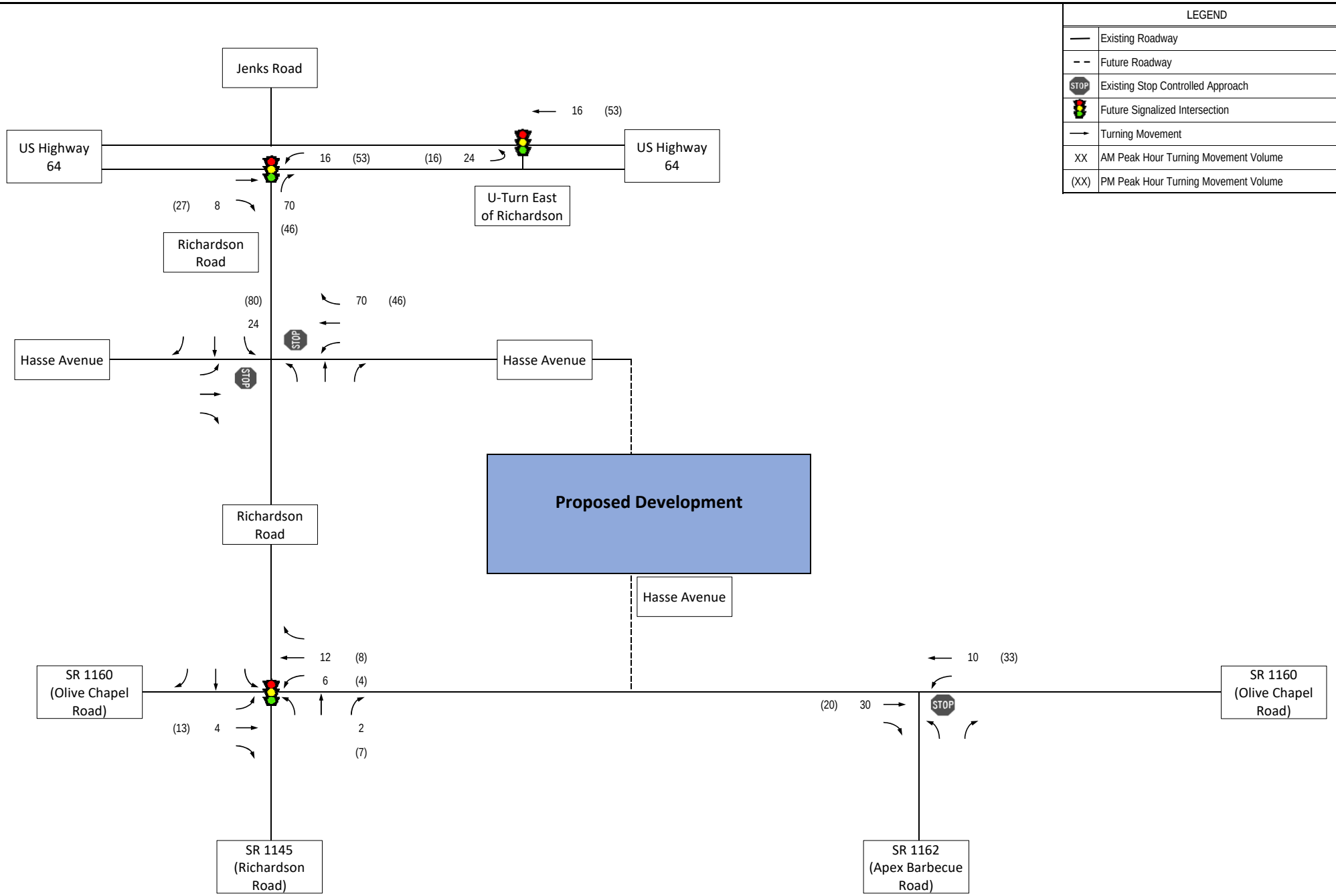


**Site Trips Due to L[illegible]wood Assemblage)**



**Hackney Tract Subdivision**
**Apex, NC**

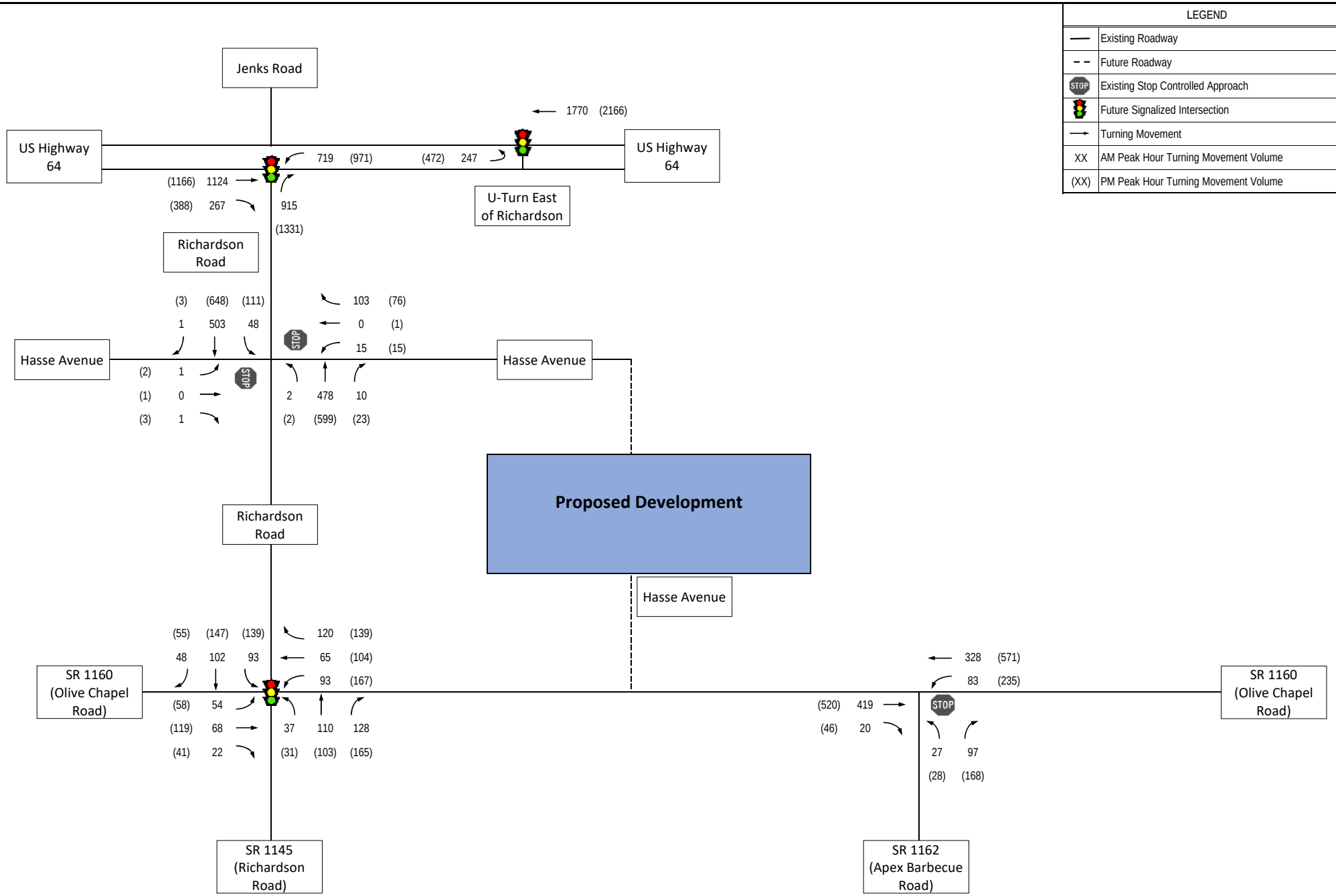


**Total Site Trips Due to Backgr[illegible] and Approved Developments**



**Hackney Tract Subdivision**
**Apex, NC**

DocuSign Envelope ID: CA81BC5D-527A-44E9-991D-E92A2C8933FE

| PROJECT REFERENCE NO. | SHEET NO. |
|---|---|
| 36249.4164 | Sig-2.0 |

## DEFAULT PHASING DIAGRAM

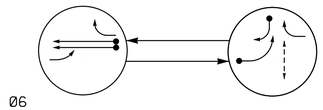


| DEFAULT PHASING TABLE OF OPERATION | | | |
|---|---|---|---|
| SIGNAL FACE | PHASE Ø3 | PHASE Ø6 | FLASH |
| 31 | ← | ~~F~~ | ~~Y~~ |
| 32,33 | → | R | R |
| 61,62 | R | G | Y |
| P31,P32 | W | DW | DRK |

## ALTERNATE PHASING DIAGRAM

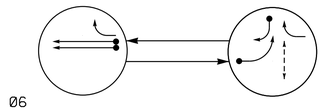


| ALTERNATE PHASING TABLE OF OPERATION | | | |
|---|---|---|---|
| SIGNAL FACE | PHASE Ø3 | PHASE Ø6 | FLASH |
| 31 | ← | ~~R~~ | ~~Y~~ |
| 32,33 | → | R | R |
| 61,62 | R | G | Y |
| P31,P32 | W | DW | DRK |

## SIGNAL FACE I.D.

All Heads L.E.D.

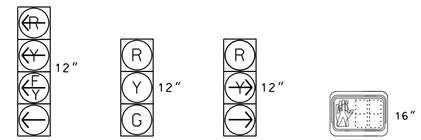


| OASIS 2070 LOOP & DETECTOR INSTALLATION CHART | | | | | | | | | | | | |
|---|---|---|---|---|---|---|---|---|---|---|---|---|
| INDUCTIVE LOOPS | | | | | DETECTOR PROGRAMMING | | | | | | | |
| LOOP | SIZE (FT) | DISTANCE FROM STOPBAR (FT) | TURNS | NEW LOOP | PHASE | CALLING | EXTENSION | FULL TIME DELAY | STRETCH TIME | DELAY TIME | SYSTEM LOOP | NEW CARD |
| 3A | 6X40 | 0 | 2-4-2 | Y | 3 | Y | Y | - | - | 15* | - | Y |
| 3B | 6X40 | 0 | 2-4-2 | Y | 3 | Y | Y | - | - | 15 | - | Y |
| 6A | 6X6 | 420 | 6 | Y | 6 | Y | Y | - | - | - | - | Y |
| 6B | 6X6 | 420 | 6 | Y | 6 | Y | Y | - | - | - | - | Y |

* Disable delay during Alternate Phasing operation.

## 2 Phase Fully Actuated (US 64 & Jenks/Richardson Road Closed Loop System) Signal System: 10534

## NOTES

1. Refer to "Roadway Standard Drawings NCDOT" dated January 2018, "Standard Specifications for Roads and Structures" dated January 2018, and all applicable sections of the latest version of the generic Project Special Provisions. The PSP can be accessed at the following website: http://connect.ncdot.gov/resources/safety/pages/ITS-Design-Resources.aspx
2. Do not program signal for late night flashing operation unless otherwise directed by the Engineer.
3. Set all detector units to presence mode.
4. Locate new cabinet so as not to obstruct sight distance of vehicles turning right on red.
5. Omit "WALK" and flashing "DON'T WALK" with no pedestrian calls.
6. Program pedestrian heads to countdown the flashing "DON'T WALK" time only.
7. The Division Engineer will determine the hours of use for each phasing plan.
8. Maximum times shown in timing chart are for free-run operation only. Coordinated signal system timing values supersede these values.
9. Closed loop system data: Controller Asset #1407




## SIGNS

| PROPOSED | | EXISTING |
|---|---|---|
| Ⓐ | No U-Turn Sign (R3-4) | Ⓐ |
| Ⓑ | "YIELD" Sign (R1-2) | Ⓑ |

## LEGEND

| PROPOSED | | EXISTING |
|---|---|---|
| | Traffic Signal Head | |
| | Modified Signal Head | N/A |
| | Sign | |
| | Pedestrian Signal Head With Push Button & Sign | |
| | Signal Pole with Guy | |
| | Signal Pole with Sidewalk Guy | |
| | Inductive Loop Detector | |
| | Controller & Cabinet | |
| M | Master Controller & Cabinet | M |
| | Junction Box | |
| | 2-in Underground Conduit | |
| N/A | Right of Way | |
| | Directional Arrow | |
| | Type II Signal Pedestal | |
| | Metal Pole with Mastarm | |
| DD | Directional Drill | N/A |

| OASIS 2070 TIMING CHART | | |
|---|---|---|
| FEATURE | PHASE 3 | PHASE 6 |
| Min Green 1 * | 7 | 14 |
| Extension 1 * | 2.0 | 6.0 |
| Max Green 1 * | 20 | 90 |
| Yellow Clearance | 3.0 | 4.8 |
| Red Clearance | 2.6 | 1.4 |
| Walk 1 * | 7 | - |
| Don't Walk 1 | 7 | - |
| Seconds Per Actuation * | - | 1.5 |
| Max Variable Initial * | - | 46 |
| Time Before Reduction * | - | 15 |
| Time To Reduce * | - | 45 |
| Minimum Gap | - | 3.4 |
| Recall Mode | - | MIN RECALL |
| Vehicle Call Memory | - | YELLOW |
| Dual Entry | - | - |
| Simultaneous Gap | ON | ON |

* These values may be field adjusted. Do not adjust Min Green and Extension times for phase 6 lower than what is shown. Min Green for all other phases should not be lower than 4 seconds.

## STOP BAR AND METAL POLE LOCATIONS

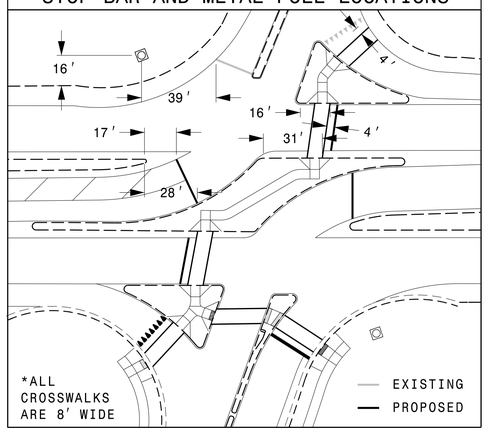


NC Dept of Transportation
Division of Highways
Final Drawing Date: 8/28/2020
DocuSigned by: Changsuk Baek
ITS & Signals Unit

New Installation

Prepared For: NCDOT Traffic Engineering Branch, Signal Design Section
750 N.Greenfield Pkwy,Garner,NC 27529

RKA
RAMEY KEMP ASSOCIATES
8210 University Executive Park Drive Suite 220 Charlotte, North Carolina 28262
Phone: 704-545-6200 | www.rameykemp.com | NC License No. C-0910

US 64 WB at Jenks Road

Division 5 | Wake County | Apex

| | | | |
|---|---|---|---|
| PLAN DATE: | August 2020 | REVIEWED BY: | WJ Hamilton |
| PREPARED BY: | ZM Esposito | RKA PROJ. NO: | 19331 (040) |

SCALE: 0 40, 1"=40'

| REVISIONS | INIT. | DATE |
|---|---|---|
| | | |

DOCUMENT NOT CONSIDERED FINAL UNLESS ALL SIGNATURES COMPLETED

SEAL
NORTH CAROLINA PROFESSIONAL SEAL 32396 ENGINEER WILLIAM J. HAMILTON
DocuSigned by: William J. Hamilton
SIGNATURE 8/24/2020 DATE

SIG. INVENTORY NO. 05-1407

DocuSign Envelope ID: CA81BC5D-527A-44E9-991D-E92A2C8933FE

| PROJECT REFERENCE NO. | SHEET NO. |
|---|---|
| 36249.4164 | Sig-1.0 |

## SIGNAL FACE I.D.

All Heads L.E.D.

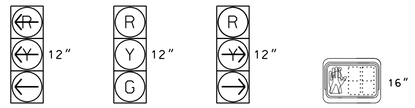


71,72 21,22 73,74 P21,P22 P71,P72

## PHASING DIAGRAM

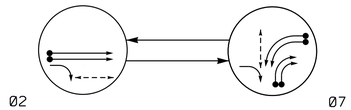


| TABLE OF OPERATION | | | |
|---|---|---|---|
| SIGNAL FACE | PHASE Ø2 | PHASE Ø7 | FLASH |
| 21,22 | G | R | Y |
| 71,72 | ~~R~~ | ← | ~~R~~ |
| 73,74 | R | → | R |
| P21,P22 | W | DW | DRK |
| P71,P72 | DW | W | DRK |

## OASIS 2070 LOOP & DETECTOR INSTALLATION CHART

| INDUCTIVE LOOPS | | | | | DETECTOR PROGRAMMING | | | | | | | |
|---|---|---|---|---|---|---|---|---|---|---|---|---|
| LOOP | SIZE (FT) | DISTANCE FROM STOPBAR (FT) | TURNS | NEW LOOP | PHASE | CALLING | EXTENSION | FULL TIME DELAY | STRETCH TIME | DELAY TIME | SYSTEM LOOP | NEW CARD |
| 2A | 6X6 | 420 | 6 | Y | 2 | Y | Y | - | - | - | - | Y |
| 2B | 6X6 | 420 | 6 | Y | 2 | Y | Y | - | - | - | - | Y |
| 7A | 6X40 | 0 | 2-4-2 | Y | 7 | Y | Y | - | - | - | - | Y |
| 7B | 6X40 | 0 | 2-4-2 | Y | 7 | Y | Y | - | - | - | - | Y |
| 7C | 6X40 | 0 | 2-4-2 | Y | 7 | Y | Y | - | - | 15 | - | Y |
| 7D | 6X40 | 0 | 2-4-2 | Y | 7 | Y | Y | - | - | 15 | - | Y |

## 2 Phase Fully Actuated (US 64 & Jenks/Richardson Road Closed Loop System) Signal System: 10534

### NOTES

1. Refer to "Roadway Standard Drawings NCDOT" dated January 2018, "Standard Specifications for Roads and Structures" dated January 2018, and all applicable sections of the latest version of the generic Project Special Provisions. The PSP can be accessed at the following website: http://connect.ncdot.gov/resources/safety/pages/ITS-Design-Resources.aspx
2. Do not program signal for late night flashing operation unless otherwise directed by the Engineer.
3. Set all detector units to presence mode.
4. Locate new cabinet so as not to obstruct sight distance of vehicles turning right on red.
5. Omit "WALK" and flashing "DON'T WALK" with no pedestrian calls.
6. Program pedestrian heads to countdown the flashing "DON'T WALK" time only.
7. Maximum times shown in timing chart are for free-run operation only. Coordinated signal system timing values supersede these values.
8. Closed loop system data: Controller Asset #1425

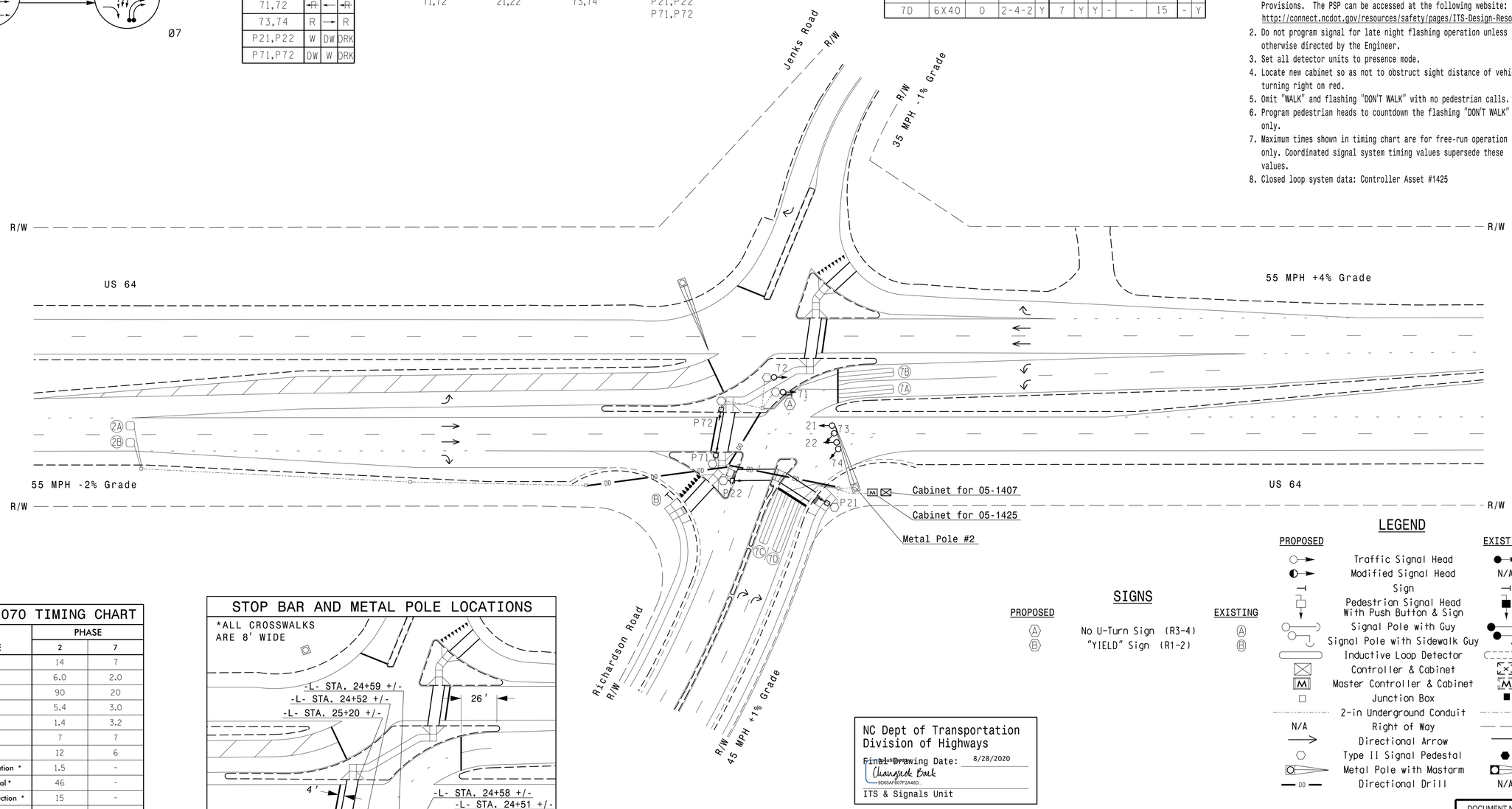


## SIGNS

| PROPOSED | | EXISTING |
|---|---|---|
| A | No U-Turn Sign (R3-4) | A |
| B | "YIELD" Sign (R1-2) | B |

## LEGEND

| PROPOSED | | EXISTING |
|---|---|---|
| | Traffic Signal Head | |
| | Modified Signal Head | N/A |
| | Sign | |
| | Pedestrian Signal Head With Push Button & Sign | |
| | Signal Pole with Guy | |
| | Signal Pole with Sidewalk Guy | |
| | Inductive Loop Detector | |
| | Controller & Cabinet | |
| M | Master Controller & Cabinet | M |
| | Junction Box | |
| | 2-in Underground Conduit | |
| N/A | Right of Way | N/A |
| | Directional Arrow | |
| | Type II Signal Pedestal | |
| | Metal Pole with Mastarm | |
| DD | Directional Drill | N/A |

## OASIS 2070 TIMING CHART

| FEATURE | PHASE 2 | PHASE 7 |
|---|---|---|
| Min Green 1 * | 14 | 7 |
| Extension 1 * | 6.0 | 2.0 |
| Max Green 1 * | 90 | 20 |
| Yellow Clearance | 5.4 | 3.0 |
| Red Clearance | 1.4 | 3.2 |
| Walk 1 * | 7 | 7 |
| Don't Walk 1 | 12 | 6 |
| Seconds Per Actuation * | 1.5 | - |
| Max Variable Initial * | 46 | - |
| Time Before Reduction * | 15 | - |
| Time To Reduce * | 45 | - |
| Minimum Gap | 3.4 | - |
| Recall Mode | MIN RECALL | - |
| Vehicle Call Memory | YELLOW | - |
| Dual Entry | - | - |
| Simultaneous Gap | ON | ON |

* These values may be field adjusted. Do not adjust Min Green and Extension times for phase 2 lower than what is shown. Min Green for all other phases should not be lower than 4 seconds.

## STOP BAR AND METAL POLE LOCATIONS




NC Dept of Transportation
Division of Highways

Final Drawing Date: 8/28/2020

Changsek Baek
9D65AF807F2A46D...

ITS & Signals Unit

New Installation

DOCUMENT NOT CONSIDERED FINAL UNLESS ALL SIGNATURES COMPLETED

Prepared For:
Transportation Mobility and Safety Division
NORTH CAROLINA DEPARTMENT OF TRANSPORTATION
Signal Design Section
750 N.Greenfield Pkwy,Garner,NC 27529

# US 64 EB at Richardson Road

Division 5 Wake County Apex

PLAN DATE: August 2020 REVIEWED BY: WJ Hamilton
PREPARED BY: ZM Esposito RKA PROJ. NO: 19331 (040)

SCALE 0 40 1"=40'

| REVISIONS | INIT. | DATE |
|---|---|---|
| | | |

SEAL
NORTH CAROLINA PROFESSIONAL SEAL 32396 ENGINEER WILLIAM J HAMILTON

William J. Hamilton
A405903D0A6A4A6...
SIGNATURE 8/24/2020 DATE

SIG. INVENTORY NO. 05-1425

RKA
RAMEY KEMP ASSOCIATES
8210 University Executive Park Drive Suite 220 Charlotte, North Carolina 28262
Phone: 704-549-4260 | www.rameykemp.com | NC License No. C-0910

DocuSign Envelope ID: CA81BC5D-527A-44E9-991D-E92A2C8933FE

| PROJECT REFERENCE NO. | SHEET NO. |
|---|---|
| 36249.4164 | Sig-3.0 |

## PHASING DIAGRAM

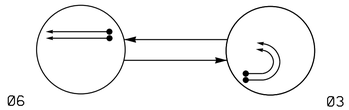


| TABLE OF OPERATION | | | |
|---|---|---|---|
| SIGNAL FACE | PHASE Ø3 | PHASE Ø6 | FLASH |
| 31, 32 | | R | R |
| 61, 62 | R | | Y |

## SIGNAL FACE I.D.

All Heads L.E.D.

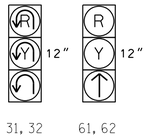


| OASIS 2070 LOOP & DETECTOR INSTALLATION CHART | | | | | | | | | | | |
|---|---|---|---|---|---|---|---|---|---|---|---|
| INDUCTIVE LOOPS | | | | | DETECTOR PROGRAMMING | | | | | | |
| LOOP | SIZE (FT) | DISTANCE FROM STOPBAR (FT) | TURNS | NEW LOOP | PHASE | CALLING | EXTENSION | FULL TIME DELAY | STRETCH TIME | DELAY TIME | SYSTEM LOOP | NEW CARD |
| 3A | 6X40 | 0 | 2-4-2 | Y | 3 | Y | Y | - | - | - | - | Y |
| 3B | 6X40 | 0 | 2-4-2 | Y | 3 | Y | Y | - | - | - | - | Y |
| 6A | 6X6 | 420 | 6 | Y | 6 | Y | Y | - | - | - | - | Y |
| 6B | 6X6 | 420 | 6 | Y | 6 | Y | Y | - | - | - | - | Y |

2 Phase
Fully Actuated
(US 64 & Jenks/Richardson Road
Closed Loop System)
Signal System: 10534

## NOTES

1. Refer to "Roadway Standard Drawings NCDOT" dated January 2018, "Standard Specifications for Roads and Structures" dated January 2018, and all applicable sections of the latest version of the generic Project Special Provisions. The PSP can be accessed at the following website: http://connect.ncdot.gov/resources/safety/pages/ITS-Design-Resources.aspx
2. Do not program signal for late night flashing operation unless otherwise directed by the Engineer.
3. Set all detector units to presence mode.
4. Locate new cabinet so as not to obstruct sight distance of vehicles turning right on red.
5. Maximum times shown in timing chart are for free-run operation only. Coordinated signal system timing values supersede thes values.
6. Closed loop system data: Controller Asset #1426

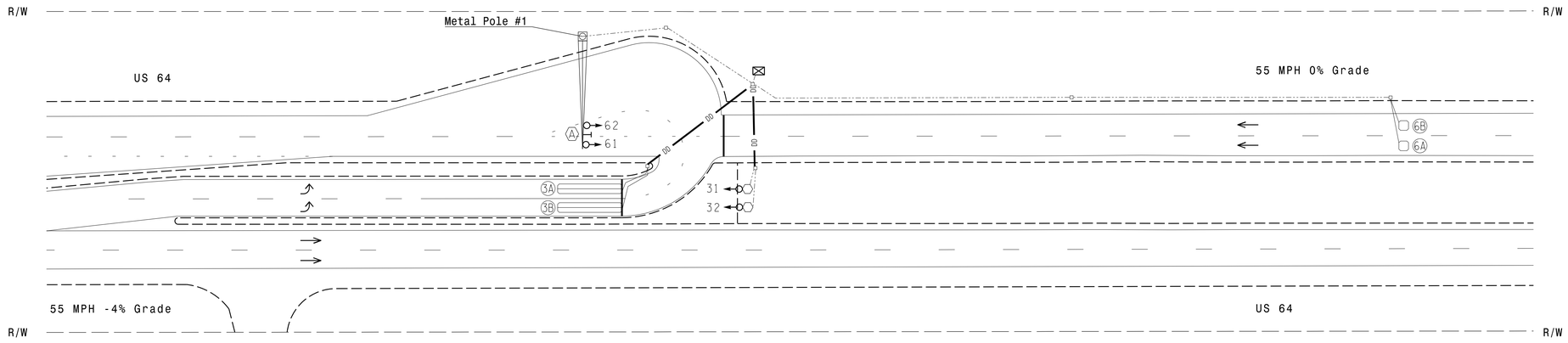


| OASIS 2070 TIMING CHART | | |
|---|---|---|
| FEATURE | PHASE 3 | PHASE 6 |
| Min Green 1 * | 7 | 14 |
| Extension 1 * | 2.0 | 6.0 |
| Max Green 1 * | 20 | 90 |
| Yellow Clearance | 3.0 | 5.2 |
| Red Clearance | 3.3 | 1.0 |
| Walk 1 * | - | - |
| Don't Walk 1 | - | - |
| Seconds Per Actuation * | - | 1.5 |
| Max Variable Initial * | - | 46 |
| Time Before Reduction * | - | 15 |
| Time To Reduce * | - | 45 |
| Minimum Gap | - | 3.4 |
| Recall Mode | - | MIN RECALL |
| Vehicle Call Memory | - | YELLOW |
| Dual Entry | - | - |
| Simultaneous Gap | ON | ON |

* These values may be field adjusted. Do not adjust Min Green and Extension times for phase 6 lower than what is shown. Min Green for all other phases should not be lower than 4 seconds.

## STOP BAR AND POLE LOCATIONS

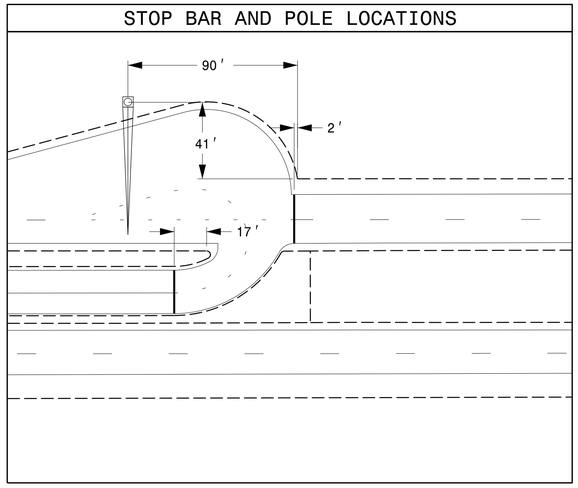


## LEGEND

| PROPOSED | | EXISTING |
|---|---|---|
| | Traffic Signal Head | |
| | Modified Signal Head | N/A |
| | Sign | |
| | Pedestrian Signal Head With Push Button & Sign | |
| | Signal Pole with Guy | |
| | Signal Pole with Sidewalk Guy | |
| | Inductive Loop Detector | |
| | Controller & Cabinet | |
| | Junction Box | |
| | 2-in Underground Conduit | |
| N/A | Right of Way | |
| | Directional Arrow | |
| DD | Directional Drill | N/A |
| A | No Left Turn Sign (R3-2) | A |
| | Metal Pole with Mastarm | |
| | Type II Signal Pedestal | |

NC Dept of Transportation
Division of Highways
Final Drawing Date: 8/28/2020
DocuSigned by: Changsek Baik
ITS & Signals Unit

New Installation

DOCUMENT NOT CONSIDERED FINAL UNLESS ALL SIGNATURES COMPLETED

Prepared For: Transportation Mobility and Safety Division, North Carolina Department of Transportation, Signal Design Section

750 N.Greenfield Pkwy,Garner,NC 27529

RAMEY KEMP ASSOCIATES
5808 Farrington Place Raleigh, North Carolina 27609
Phone: 919-872-5115 | www.rameykemp.com | NC License No. C-0910

US 64 WB
at
U-Turn East of Richardson Road

Division 5 Wake County Apex

| PLAN DATE: | August 2020 | REVIEWED BY: | WJ Hamilton |
|---|---|---|---|
| PREPARED BY: | ZM Esposito | RKA PROJ. NO: | 19331 (040) |

SCALE 0 40 1"=40'

| REVISIONS | INIT. | DATE |
|---|---|---|
| | | |

SEAL
NORTH CAROLINA PROFESSIONAL SEAL 32396 ENGINEER WILLIAM J. HAMILTON
DocuSigned by: William J. Hamilton
SIGNATURE 8/24/2020 DATE
SIG. INVENTORY NO. 05-1426

# APPENDIX D:

# Intersection Capacity Analysis

| Intersection | |
|---|---|
| Int Delay, s/veh | 7.9 |

| Movement | EBL | EBT | EBR | WBL | WBT | WBR | NBL | NBT | NBR | SBL | SBT | SBR |
|---|---|---|---|---|---|---|---|---|---|---|---|---|
| Lane Configurations | | | | | | | | | | | | |
| Traffic Vol, veh/h | 14 | 47 | 15 | 64 | 50 | 19 | 19 | 92 | 71 | 21 | 54 | 16 |
| Future Vol, veh/h | 14 | 47 | 15 | 64 | 50 | 19 | 19 | 92 | 71 | 21 | 54 | 16 |
| Conflicting Peds, #/hr | 0 | 0 | 0 | 0 | 0 | 0 | 0 | 0 | 0 | 0 | 0 | 0 |
| Sign Control | Free | Free | Free | Free | Free | Free | Stop | Stop | Stop | Stop | Stop | Stop |
| RT Channelized | - | - | None | - | - | None | - | - | None | - | - | None |
| Storage Length | 250 | - | - | 150 | - | 150 | 100 | - | - | 150 | - | 175 |
| Veh in Median Storage, # | - | 0 | - | - | 0 | - | - | 0 | - | - | 0 | - |
| Grade, % | - | 0 | - | - | 0 | - | - | 0 | - | - | 0 | - |
| Peak Hour Factor | 90 | 90 | 90 | 90 | 90 | 90 | 90 | 90 | 90 | 90 | 90 | 90 |
| Heavy Vehicles, % | 2 | 2 | 2 | 2 | 2 | 2 | 2 | 2 | 2 | 2 | 2 | 2 |
| Mvmt Flow | 16 | 52 | 17 | 71 | 56 | 21 | 21 | 102 | 79 | 23 | 60 | 18 |

| Major/Minor | Major1 | | | Major2 | | | Minor1 | | | Minor2 | | |
|---|---|---|---|---|---|---|---|---|---|---|---|---|
| Conflicting Flow All | 77 | 0 | 0 | 69 | 0 | 0 | 341 | 312 | 61 | 381 | 299 | 56 |
| Stage 1 | - | - | - | - | - | - | 93 | 93 | - | 198 | 198 | - |
| Stage 2 | - | - | - | - | - | - | 248 | 219 | - | 183 | 101 | - |
| Critical Hdwy | 4.12 | - | - | 4.12 | - | - | 7.12 | 6.52 | 6.22 | 7.12 | 6.52 | 6.22 |
| Critical Hdwy Stg 1 | - | - | - | - | - | - | 6.12 | 5.52 | - | 6.12 | 5.52 | - |
| Critical Hdwy Stg 2 | - | - | - | - | - | - | 6.12 | 5.52 | - | 6.12 | 5.52 | - |
| Follow-up Hdwy | 2.218 | - | - | 2.218 | - | - | 3.518 | 4.018 | 3.318 | 3.518 | 4.018 | 3.318 |
| Pot Cap-1 Maneuver | 1522 | - | - | 1532 | - | - | 613 | 603 | 1004 | 577 | 613 | 1011 |
| Stage 1 | - | - | - | - | - | - | 914 | 818 | - | 804 | 737 | - |
| Stage 2 | - | - | - | - | - | - | 756 | 722 | - | 819 | 811 | - |
| Platoon blocked, % | | - | - | | - | - | | | | | | |
| Mov Cap-1 Maneuver | 1522 | - | - | 1532 | - | - | 531 | 569 | 1004 | 439 | 579 | 1011 |
| Mov Cap-2 Maneuver | - | - | - | - | - | - | 531 | 569 | - | 439 | 579 | - |
| Stage 1 | - | - | - | - | - | - | 904 | 809 | - | 795 | 703 | - |
| Stage 2 | - | - | - | - | - | - | 648 | 689 | - | 652 | 802 | - |

| Approach | EB | WB | NB | SB |
|---|---|---|---|---|
| HCM Control Delay, s | 1.4 | 3.6 | 11.9 | 11.7 |
| HCM LOS | | | B | B |

| Minor Lane/Major Mvmt | NBLn1 | NBLn2 | EBL | EBT | EBR | WBL | WBT | WBR | SBLn1 | SBLn2 | SBLn3 |
|---|---|---|---|---|---|---|---|---|---|---|---|
| Capacity (veh/h) | 531 | 701 | 1522 | - | - | 1532 | - | - | 439 | 579 | 1011 |
| HCM Lane V/C Ratio | 0.04 | 0.258 | 0.01 | - | - | 0.046 | - | - | 0.053 | 0.104 | 0.018 |
| HCM Control Delay (s) | 12.1 | 11.9 | 7.4 | - | - | 7.5 | - | - | 13.7 | 11.9 | 8.6 |
| HCM Lane LOS | B | B | A | - | - | A | - | - | B | B | A |
| HCM 95th %tile Q(veh) | 0.1 | 1 | 0 | - | - | 0.1 | - | - | 0.2 | 0.3 | 0.1 |

| Intersection | |
|---|---|
| Int Delay, s/veh | 3.1 |

| Movement | EBT | EBR | WBL | WBT | NBL | NBR |
|---|---|---|---|---|---|---|
| Lane Configurations | | | | | | |
| Traffic Vol, veh/h | 232 | 18 | 74 | 181 | 24 | 86 |
| Future Vol, veh/h | 232 | 18 | 74 | 181 | 24 | 86 |
| Conflicting Peds, #/hr | 0 | 0 | 0 | 0 | 0 | 0 |
| Sign Control | Free | Free | Free | Free | Stop | Stop |
| RT Channelized | - | None | - | None | - | None |
| Storage Length | - | - | - | - | 0 | - |
| Veh in Median Storage, # | 0 | - | - | 0 | 0 | - |
| Grade, % | 0 | - | - | 0 | 0 | - |
| Peak Hour Factor | 90 | 90 | 90 | 90 | 90 | 90 |
| Heavy Vehicles, % | 2 | 2 | 2 | 2 | 2 | 2 |
| Mvmt Flow | 258 | 20 | 82 | 201 | 27 | 96 |

| Major/Minor | Major1 | | Major2 | | Minor1 | |
|---|---|---|---|---|---|---|
| Conflicting Flow All | 0 | 0 | 278 | 0 | 633 | 268 |
| Stage 1 | - | - | - | - | 268 | - |
| Stage 2 | - | - | - | - | 365 | - |
| Critical Hdwy | - | - | 4.12 | - | 6.42 | 6.22 |
| Critical Hdwy Stg 1 | - | - | - | - | 5.42 | - |
| Critical Hdwy Stg 2 | - | - | - | - | 5.42 | - |
| Follow-up Hdwy | - | - | 2.218 | - | 3.518 | 3.318 |
| Pot Cap-1 Maneuver | - | - | 1285 | - | 444 | 771 |
| Stage 1 | - | - | - | - | 777 | - |
| Stage 2 | - | - | - | - | 702 | - |
| Platoon blocked, % | - | - | | - | | |
| Mov Cap-1 Maneuver | - | - | 1285 | - | 412 | 771 |
| Mov Cap-2 Maneuver | - | - | - | - | 412 | - |
| Stage 1 | - | - | - | - | 777 | - |
| Stage 2 | - | - | - | - | 651 | - |

| Approach | EB | WB | NB |
|---|---|---|---|
| HCM Control Delay, s | 0 | 2.3 | 11.8 |
| HCM LOS | | | B |

| Minor Lane/Major Mvmt | NBLn1 | EBT | EBR | WBL | WBT |
|---|---|---|---|---|---|
| Capacity (veh/h) | 648 | - | - | 1285 | - |
| HCM Lane V/C Ratio | 0.189 | - | - | 0.064 | - |
| HCM Control Delay (s) | 11.8 | - | - | 8 | 0 |
| HCM Lane LOS | B | - | - | A | A |
| HCM 95th %tile Q(veh) | 0.7 | - | - | 0.2 | - |

| Intersection | |
|---|---|
| Int Delay, s/veh | 2.3 |

| Movement | EBL | EBT | EBR | WBL | WBT | WBR | NBL | NBT | NBR | SBL | SBT | SBR |
|---|---|---|---|---|---|---|---|---|---|---|---|---|
| Lane Configurations | | ↕ | | | ↕ | | ↰ | ↑ | | ↰ | ↑ | |
| Traffic Vol, veh/h | 1 | 0 | 1 | 13 | 0 | 38 | 2 | 139 | 9 | 25 | 85 | 1 |
| Future Vol, veh/h | 1 | 0 | 1 | 13 | 0 | 38 | 2 | 139 | 9 | 25 | 85 | 1 |
| Conflicting Peds, #/hr | 0 | 0 | 0 | 0 | 0 | 0 | 0 | 0 | 0 | 0 | 0 | 0 |
| Sign Control | Stop | Stop | Stop | Stop | Stop | Stop | Free | Free | Free | Free | Free | Free |
| RT Channelized | - | - | None | - | - | None | - | - | None | - | - | None |
| Storage Length | - | - | - | - | - | - | 125 | - | - | 150 | - | - |
| Veh in Median Storage, # | - | 1 | - | - | 1 | - | - | 0 | - | - | 0 | - |
| Grade, % | - | 0 | - | - | 0 | - | - | 0 | - | - | 0 | - |
| Peak Hour Factor | 90 | 90 | 90 | 90 | 90 | 90 | 90 | 90 | 90 | 90 | 90 | 90 |
| Heavy Vehicles, % | 2 | 2 | 2 | 2 | 2 | 2 | 2 | 2 | 2 | 2 | 2 | 2 |
| Mvmt Flow | 1 | 0 | 1 | 14 | 0 | 42 | 2 | 154 | 10 | 28 | 94 | 1 |

| Major/Minor | Minor2 | | | Minor1 | | | Major1 | | | Major2 | | |
|---|---|---|---|---|---|---|---|---|---|---|---|---|
| Conflicting Flow All | 335 | 319 | 95 | 314 | 314 | 159 | 95 | 0 | 0 | 164 | 0 | 0 |
| Stage 1 | 151 | 151 | - | 163 | 163 | - | - | - | - | - | - | - |
| Stage 2 | 184 | 168 | - | 151 | 151 | - | - | - | - | - | - | - |
| Critical Hdwy | 7.12 | 6.52 | 6.22 | 7.12 | 6.52 | 6.22 | 4.12 | - | - | 4.12 | - | - |
| Critical Hdwy Stg 1 | 6.12 | 5.52 | - | 6.12 | 5.52 | - | - | - | - | - | - | - |
| Critical Hdwy Stg 2 | 6.12 | 5.52 | - | 6.12 | 5.52 | - | - | - | - | - | - | - |
| Follow-up Hdwy | 3.518 | 4.018 | 3.318 | 3.518 | 4.018 | 3.318 | 2.218 | - | - | 2.218 | - | - |
| Pot Cap-1 Maneuver | 619 | 598 | 962 | 639 | 601 | 886 | 1499 | - | - | 1414 | - | - |
| Stage 1 | 851 | 772 | - | 839 | 763 | - | - | - | - | - | - | - |
| Stage 2 | 818 | 759 | - | 851 | 772 | - | - | - | - | - | - | - |
| Platoon blocked, % | | | | | | | | - | - | | - | - |
| Mov Cap-1 Maneuver | 580 | 585 | 962 | 628 | 588 | 886 | 1499 | - | - | 1414 | - | - |
| Mov Cap-2 Maneuver | 625 | 606 | - | 667 | 615 | - | - | - | - | - | - | - |
| Stage 1 | 850 | 757 | - | 838 | 762 | - | - | - | - | - | - | - |
| Stage 2 | 778 | 758 | - | 833 | 757 | - | - | - | - | - | - | - |

| Approach | EB | WB | NB | SB |
|---|---|---|---|---|
| HCM Control Delay, s | 9.8 | 9.7 | 0.1 | 1.7 |
| HCM LOS | A | A | | |

| Minor Lane/Major Mvmt | NBL | NBT | NBR | EBLn1 | WBLn1 | SBL | SBT | SBR |
|---|---|---|---|---|---|---|---|---|
| Capacity (veh/h) | 1499 | - | - | 758 | 818 | 1414 | - | - |
| HCM Lane V/C Ratio | 0.001 | - | - | 0.003 | 0.069 | 0.02 | - | - |
| HCM Control Delay (s) | 7.4 | - | - | 9.8 | 9.7 | 7.6 | - | - |
| HCM Lane LOS | A | - | - | A | A | A | - | - |
| HCM 95th %tile Q(veh) | 0 | - | - | 0 | 0.2 | 0.1 | - | - |

| Intersection | |
|---|---|
| Int Delay, s/veh | 10.5 |

| Movement | EBL | EBT | EBR | WBL | WBT | WBR | NBL | NBT | NBR | SBL | SBT | SBR |
|---|---|---|---|---|---|---|---|---|---|---|---|---|
| Lane Configurations | | ↑↑ | ↱ | | | | | | ↱ | | ↰ | |
| Traffic Vol, veh/h | 0 | 1020 | 21 | 0 | 0 | 0 | 0 | 0 | 244 | 0 | 141 | 0 |
| Future Vol, veh/h | 0 | 1020 | 21 | 0 | 0 | 0 | 0 | 0 | 244 | 0 | 141 | 0 |
| Conflicting Peds, #/hr | 0 | 0 | 0 | 0 | 0 | 0 | 0 | 0 | 0 | 0 | 0 | 0 |
| Sign Control | Free | Free | Free | Free | Free | Free | Stop | Stop | Stop | Stop | Stop | Stop |
| RT Channelized | - | - | Yield | - | - | None | - | - | None | - | - | None |
| Storage Length | - | - | 175 | - | - | - | - | - | 0 | - | - | - |
| Veh in Median Storage, # | - | 0 | - | - | 16983 | - | - | 0 | - | - | 0 | - |
| Grade, % | - | -2 | - | - | 0 | - | - | 1 | - | - | 0 | - |
| Peak Hour Factor | 90 | 90 | 90 | 90 | 90 | 90 | 90 | 90 | 90 | 90 | 90 | 90 |
| Heavy Vehicles, % | 2 | 2 | 2 | 2 | 2 | 2 | 2 | 2 | 2 | 2 | 2 | 2 |
| Mvmt Flow | 0 | 1133 | 23 | 0 | 0 | 0 | 0 | 0 | 271 | 0 | 157 | 0 |

| Major/Minor | Major1 | | | Minor1 | | | Minor2 | | |
|---|---|---|---|---|---|---|---|---|---|
| Conflicting Flow All | - | 0 | 0 | - | - | 567 | 567 | 1133 | - |
| Stage 1 | - | - | - | - | - | - | 0 | 0 | - |
| Stage 2 | - | - | - | - | - | - | 567 | 1133 | - |
| Critical Hdwy | - | - | - | - | - | 7.04 | 7.54 | 6.54 | - |
| Critical Hdwy Stg 1 | - | - | - | - | - | - | - | - | - |
| Critical Hdwy Stg 2 | - | - | - | - | - | - | 6.54 | 5.54 | - |
| Follow-up Hdwy | - | - | - | - | - | 3.32 | 3.52 | 4.02 | - |
| Pot Cap-1 Maneuver | 0 | - | - | 0 | 0 | 459 | 406 | 202 | 0 |
| Stage 1 | 0 | - | - | 0 | 0 | - | - | - | 0 |
| Stage 2 | 0 | - | - | 0 | 0 | - | 476 | 276 | 0 |
| Platoon blocked, % | | - | - | | | | | | |
| Mov Cap-1 Maneuver | - | - | - | - | - | 459 | 166 | 202 | - |
| Mov Cap-2 Maneuver | - | - | - | - | - | - | 166 | 202 | - |
| Stage 1 | - | - | - | - | - | - | - | - | - |
| Stage 2 | - | - | - | - | - | - | 195 | 276 | - |

| Approach | EB | NB | SB |
|---|---|---|---|
| HCM Control Delay, s | 0 | 23.5 | 66 |
| HCM LOS | | C | F |

| Minor Lane/Major Mvmt | NBLn1 | EBT | EBR | SBLn1 |
|---|---|---|---|---|
| Capacity (veh/h) | 459 | - | - | 202 |
| HCM Lane V/C Ratio | 0.591 | - | - | 0.776 |
| HCM Control Delay (s) | 23.5 | - | - | 66 |
| HCM Lane LOS | C | - | - | F |
| HCM 95th %tile Q(veh) | 3.7 | - | - | 5.3 |

| Intersection | |
|---|---|
| Int Delay, s/veh | 0.3 |

| Movement | EBT | EBR | WBL | WBT | NBL | NBR |
|---|---|---|---|---|---|---|
| Lane Configurations | | | | ↑↑ | ↰ | |
| Traffic Vol, veh/h | 0 | 0 | 0 | 1128 | 24 | 0 |
| Future Vol, veh/h | 0 | 0 | 0 | 1128 | 24 | 0 |
| Conflicting Peds, #/hr | 0 | 0 | 0 | 0 | 0 | 0 |
| Sign Control | Free | Free | Free | Free | Stop | Stop |
| RT Channelized | - | None | - | None | - | None |
| Storage Length | - | - | - | - | 0 | - |
| Veh in Median Storage, # | 0 | - | - | 0 | 0 | - |
| Grade, % | 0 | - | - | 0 | 0 | - |
| Peak Hour Factor | 90 | 90 | 90 | 90 | 90 | 90 |
| Heavy Vehicles, % | 2 | 2 | 2 | 2 | 2 | 2 |
| Mvmt Flow | 0 | 0 | 0 | 1253 | 27 | 0 |

| Major/Minor | Major2 | | Minor1 | |
|---|---|---|---|---|
| Conflicting Flow All | - | - | 627 | - |
| Stage 1 | - | - | 0 | - |
| Stage 2 | - | - | 627 | - |
| Critical Hdwy | - | - | 6.84 | - |
| Critical Hdwy Stg 1 | - | - | - | - |
| Critical Hdwy Stg 2 | - | - | 5.84 | - |
| Follow-up Hdwy | - | - | 3.52 | - |
| Pot Cap-1 Maneuver | 0 | - | 416 | 0 |
| Stage 1 | 0 | - | - | 0 |
| Stage 2 | 0 | - | 495 | 0 |
| Platoon blocked, % | | - | | |
| Mov Cap-1 Maneuver | - | - | 416 | - |
| Mov Cap-2 Maneuver | - | - | 416 | - |
| Stage 1 | - | - | - | - |
| Stage 2 | - | - | 495 | - |

| Approach | WB | NB |
|---|---|---|
| HCM Control Delay, s | 0 | 14.2 |
| HCM LOS | | B |

| Minor Lane/Major Mvmt | NBLn1 | WBT |
|---|---|---|
| Capacity (veh/h) | 416 | - |
| HCM Lane V/C Ratio | 0.064 | - |
| HCM Control Delay (s) | 14.2 | - |
| HCM Lane LOS | B | - |
| HCM 95th %tile Q(veh) | 0.2 | - |

| Intersection | |
|---|---|
| Int Delay, s/veh | 8.3 |

| Movement | EBL | EBT | EBR | WBL | WBT | WBR | NBL | NBT | NBR | SBL | SBT | SBR |
|---|---|---|---|---|---|---|---|---|---|---|---|---|
| Lane Configurations | | | | | | | | | | | | |
| Traffic Vol, veh/h | 13 | 99 | 21 | 100 | 81 | 39 | 19 | 85 | 115 | 29 | 73 | 8 |
| Future Vol, veh/h | 13 | 99 | 21 | 100 | 81 | 39 | 19 | 85 | 115 | 29 | 73 | 8 |
| Conflicting Peds, #/hr | 0 | 0 | 0 | 0 | 0 | 0 | 0 | 0 | 0 | 0 | 0 | 0 |
| Sign Control | Free | Free | Free | Free | Free | Free | Stop | Stop | Stop | Stop | Stop | Stop |
| RT Channelized | - | - | None | - | - | None | - | - | None | - | - | None |
| Storage Length | 250 | - | - | 150 | - | 150 | 100 | - | - | 150 | - | 175 |
| Veh in Median Storage, # | - | 0 | - | - | 0 | - | - | 0 | - | - | 0 | - |
| Grade, % | - | 0 | - | - | 0 | - | - | 0 | - | - | 0 | - |
| Peak Hour Factor | 90 | 90 | 90 | 90 | 90 | 90 | 90 | 90 | 90 | 90 | 90 | 90 |
| Heavy Vehicles, % | 2 | 2 | 2 | 2 | 2 | 2 | 2 | 2 | 2 | 2 | 2 | 2 |
| Mvmt Flow | 14 | 110 | 23 | 111 | 90 | 43 | 21 | 94 | 128 | 32 | 81 | 9 |

| Major/Minor | Major1 | | | Major2 | | | Minor1 | | | Minor2 | | |
|---|---|---|---|---|---|---|---|---|---|---|---|---|
| Conflicting Flow All | 133 | 0 | 0 | 133 | 0 | 0 | 529 | 505 | 122 | 573 | 473 | 90 |
| Stage 1 | - | - | - | - | - | - | 150 | 150 | - | 312 | 312 | - |
| Stage 2 | - | - | - | - | - | - | 379 | 355 | - | 261 | 161 | - |
| Critical Hdwy | 4.12 | - | - | 4.12 | - | - | 7.12 | 6.52 | 6.22 | 7.12 | 6.52 | 6.22 |
| Critical Hdwy Stg 1 | - | - | - | - | - | - | 6.12 | 5.52 | - | 6.12 | 5.52 | - |
| Critical Hdwy Stg 2 | - | - | - | - | - | - | 6.12 | 5.52 | - | 6.12 | 5.52 | - |
| Follow-up Hdwy | 2.218 | - | - | 2.218 | - | - | 3.518 | 4.018 | 3.318 | 3.518 | 4.018 | 3.318 |
| Pot Cap-1 Maneuver | 1452 | - | - | 1452 | - | - | 460 | 470 | 929 | 430 | 490 | 968 |
| Stage 1 | - | - | - | - | - | - | 853 | 773 | - | 699 | 658 | - |
| Stage 2 | - | - | - | - | - | - | 643 | 630 | - | 744 | 765 | - |
| Platoon blocked, % | | - | - | | - | - | | | | | | |
| Mov Cap-1 Maneuver | 1452 | - | - | 1452 | - | - | 368 | 430 | 929 | 289 | 448 | 968 |
| Mov Cap-2 Maneuver | - | - | - | - | - | - | 368 | 430 | - | 289 | 448 | - |
| Stage 1 | - | - | - | - | - | - | 844 | 765 | - | 692 | 608 | - |
| Stage 2 | - | - | - | - | - | - | 510 | 582 | - | 557 | 757 | - |

| Approach | EB | WB | NB | SB |
|---|---|---|---|---|
| HCM Control Delay, s | 0.7 | 3.5 | 14.1 | 15.5 |
| HCM LOS | | | B | C |

| Minor Lane/Major Mvmt | NBLn1 | NBLn2 | EBL | EBT | EBR | WBL | WBT | WBR | SBLn1 | SBLn2 | SBLn3 |
|---|---|---|---|---|---|---|---|---|---|---|---|
| Capacity (veh/h) | 368 | 622 | 1452 | - | - | 1452 | - | - | 289 | 448 | 968 |
| HCM Lane V/C Ratio | 0.057 | 0.357 | 0.01 | - | - | 0.077 | - | - | 0.111 | 0.181 | 0.009 |
| HCM Control Delay (s) | 15.4 | 14 | 7.5 | - | - | 7.7 | - | - | 19 | 14.8 | 8.8 |
| HCM Lane LOS | C | B | A | - | - | A | - | - | C | B | A |
| HCM 95th %tile Q(veh) | 0.2 | 1.6 | 0 | - | - | 0.2 | - | - | 0.4 | 0.7 | 0 |

| Intersection | |
|---|---|
| Int Delay, s/veh | 4.8 |

| Movement | EBT | EBR | WBL | WBT | NBL | NBR |
|---|---|---|---|---|---|---|
| Lane Configurations | | | | | | |
| Traffic Vol, veh/h | 327 | 41 | 209 | 344 | 25 | 149 |
| Future Vol, veh/h | 327 | 41 | 209 | 344 | 25 | 149 |
| Conflicting Peds, #/hr | 0 | 0 | 0 | 0 | 0 | 0 |
| Sign Control | Free | Free | Free | Free | Stop | Stop |
| RT Channelized | - | None | - | None | - | None |
| Storage Length | - | - | - | - | 0 | - |
| Veh in Median Storage, # | 0 | - | - | 0 | 0 | - |
| Grade, % | 0 | - | - | 0 | 0 | - |
| Peak Hour Factor | 90 | 90 | 90 | 90 | 90 | 90 |
| Heavy Vehicles, % | 2 | 2 | 2 | 2 | 2 | 2 |
| Mvmt Flow | 363 | 46 | 232 | 382 | 28 | 166 |

| Major/Minor | Major1 | | Major2 | | Minor1 | |
|---|---|---|---|---|---|---|
| Conflicting Flow All | 0 | 0 | 409 | 0 | 1232 | 386 |
| Stage 1 | - | - | - | - | 386 | - |
| Stage 2 | - | - | - | - | 846 | - |
| Critical Hdwy | - | - | 4.12 | - | 6.42 | 6.22 |
| Critical Hdwy Stg 1 | - | - | - | - | 5.42 | - |
| Critical Hdwy Stg 2 | - | - | - | - | 5.42 | - |
| Follow-up Hdwy | - | - | 2.218 | - | 3.518 | 3.318 |
| Pot Cap-1 Maneuver | - | - | 1150 | - | 196 | 662 |
| Stage 1 | - | - | - | - | 687 | - |
| Stage 2 | - | - | - | - | 421 | - |
| Platoon blocked, % | - | - | | - | | |
| Mov Cap-1 Maneuver | - | - | 1150 | - | 146 | 662 |
| Mov Cap-2 Maneuver | - | - | - | - | 146 | - |
| Stage 1 | - | - | - | - | 687 | - |
| Stage 2 | - | - | - | - | 313 | - |

| Approach | EB | WB | NB |
|---|---|---|---|
| HCM Control Delay, s | 0 | 3.4 | 19.5 |
| HCM LOS | | | C |

| Minor Lane/Major Mvmt | NBLn1 | EBT | EBR | WBL | WBT |
|---|---|---|---|---|---|
| Capacity (veh/h) | 439 | - | - | 1150 | - |
| HCM Lane V/C Ratio | 0.44 | - | - | 0.202 | - |
| HCM Control Delay (s) | 19.5 | - | - | 8.9 | 0 |
| HCM Lane LOS | C | - | - | A | A |
| HCM 95th %tile Q(veh) | 2.2 | - | - | 0.8 | - |

| Intersection | |
|---|---|
| Int Delay, s/veh | 2.2 |

| Movement | EBL | EBT | EBR | WBL | WBT | WBR | NBL | NBT | NBR | SBL | SBT | SBR |
|---|---|---|---|---|---|---|---|---|---|---|---|---|
| Lane Configurations | | ↕ | | | ↕ | | ↰ | ↑ | | ↰ | ↑ | |
| Traffic Vol, veh/h | 2 | 1 | 3 | 13 | 1 | 33 | 2 | 126 | 20 | 38 | 135 | 3 |
| Future Vol, veh/h | 2 | 1 | 3 | 13 | 1 | 33 | 2 | 126 | 20 | 38 | 135 | 3 |
| Conflicting Peds, #/hr | 0 | 0 | 0 | 0 | 0 | 0 | 0 | 0 | 0 | 0 | 0 | 0 |
| Sign Control | Stop | Stop | Stop | Stop | Stop | Stop | Free | Free | Free | Free | Free | Free |
| RT Channelized | - | - | None | - | - | None | - | - | None | - | - | None |
| Storage Length | - | - | - | - | - | - | 125 | - | - | 150 | - | - |
| Veh in Median Storage, # | - | 1 | - | - | 1 | - | - | 0 | - | - | 0 | - |
| Grade, % | - | 0 | - | - | 0 | - | - | 0 | - | - | 0 | - |
| Peak Hour Factor | 90 | 90 | 90 | 90 | 90 | 90 | 90 | 90 | 90 | 90 | 90 | 90 |
| Heavy Vehicles, % | 2 | 2 | 2 | 2 | 2 | 2 | 2 | 2 | 2 | 2 | 2 | 2 |
| Mvmt Flow | 2 | 1 | 3 | 14 | 1 | 37 | 2 | 140 | 22 | 42 | 150 | 3 |

| Major/Minor | Minor2 | | | Minor1 | | | Major1 | | | Major2 | | |
|---|---|---|---|---|---|---|---|---|---|---|---|---|
| Conflicting Flow All | 410 | 402 | 152 | 393 | 392 | 151 | 153 | 0 | 0 | 162 | 0 | 0 |
| Stage 1 | 236 | 236 | - | 155 | 155 | - | - | - | - | - | - | - |
| Stage 2 | 174 | 166 | - | 238 | 237 | - | - | - | - | - | - | - |
| Critical Hdwy | 7.12 | 6.52 | 6.22 | 7.12 | 6.52 | 6.22 | 4.12 | - | - | 4.12 | - | - |
| Critical Hdwy Stg 1 | 6.12 | 5.52 | - | 6.12 | 5.52 | - | - | - | - | - | - | - |
| Critical Hdwy Stg 2 | 6.12 | 5.52 | - | 6.12 | 5.52 | - | - | - | - | - | - | - |
| Follow-up Hdwy | 3.518 | 4.018 | 3.318 | 3.518 | 4.018 | 3.318 | 2.218 | - | - | 2.218 | - | - |
| Pot Cap-1 Maneuver | 552 | 537 | 894 | 566 | 544 | 895 | 1428 | - | - | 1417 | - | - |
| Stage 1 | 767 | 710 | - | 847 | 769 | - | - | - | - | - | - | - |
| Stage 2 | 828 | 761 | - | 765 | 709 | - | - | - | - | - | - | - |
| Platoon blocked, % | | | | | | | | - | - | | - | - |
| Mov Cap-1 Maneuver | 516 | 520 | 894 | 550 | 527 | 895 | 1428 | - | - | 1417 | - | - |
| Mov Cap-2 Maneuver | 581 | 558 | - | 606 | 568 | - | - | - | - | - | - | - |
| Stage 1 | 766 | 689 | - | 846 | 768 | - | - | - | - | - | - | - |
| Stage 2 | 792 | 760 | - | 738 | 688 | - | - | - | - | - | - | - |

| Approach | EB | WB | NB | SB |
|---|---|---|---|---|
| HCM Control Delay, s | 10.2 | 9.9 | 0.1 | 1.6 |
| HCM LOS | B | A | | |

| Minor Lane/Major Mvmt | NBL | NBT | NBR | EBLn1 | WBLn1 | SBL | SBT | SBR |
|---|---|---|---|---|---|---|---|---|
| Capacity (veh/h) | 1428 | - | - | 698 | 782 | 1417 | - | - |
| HCM Lane V/C Ratio | 0.002 | - | - | 0.01 | 0.067 | 0.03 | - | - |
| HCM Control Delay (s) | 7.5 | - | - | 10.2 | 9.9 | 7.6 | - | - |
| HCM Lane LOS | A | - | - | B | A | A | - | - |
| HCM 95th %tile Q(veh) | 0 | - | - | 0 | 0.2 | 0.1 | - | - |

| Intersection | |
|---|---|
| Int Delay, s/veh | 30.2 |

| Movement | EBL | EBT | EBR | WBL | WBT | WBR | NBL | NBT | NBR | SBL | SBT | SBR |
|---|---|---|---|---|---|---|---|---|---|---|---|---|
| Lane Configurations | | ↑↑ | ↱ | | | | | | ↱ | | ↰ | |
| Traffic Vol, veh/h | 0 | 1132 | 30 | 0 | 0 | 0 | 0 | 0 | 203 | 0 | 196 | 0 |
| Future Vol, veh/h | 0 | 1132 | 30 | 0 | 0 | 0 | 0 | 0 | 203 | 0 | 196 | 0 |
| Conflicting Peds, #/hr | 0 | 0 | 0 | 0 | 0 | 0 | 0 | 0 | 0 | 0 | 0 | 0 |
| Sign Control | Free | Free | Free | Free | Free | Free | Stop | Stop | Stop | Stop | Stop | Stop |
| RT Channelized | - | - | Yield | - | - | None | - | - | None | - | - | None |
| Storage Length | - | - | 175 | - | - | - | - | - | 0 | - | - | - |
| Veh in Median Storage, # | - | 0 | - | - | 16983 | - | - | 0 | - | - | 0 | - |
| Grade, % | - | -2 | - | - | 0 | - | - | 1 | - | - | 0 | - |
| Peak Hour Factor | 90 | 90 | 90 | 90 | 90 | 90 | 90 | 90 | 90 | 90 | 90 | 90 |
| Heavy Vehicles, % | 2 | 2 | 2 | 2 | 2 | 2 | 2 | 2 | 2 | 2 | 2 | 2 |
| Mvmt Flow | 0 | 1258 | 33 | 0 | 0 | 0 | 0 | 0 | 226 | 0 | 218 | 0 |

| Major/Minor | Major1 | | | Minor1 | | | Minor2 | | |
|---|---|---|---|---|---|---|---|---|---|
| Conflicting Flow All | - | 0 | 0 | - | - | 629 | 629 | 1258 | - |
| Stage 1 | - | - | - | - | - | - | 0 | 0 | - |
| Stage 2 | - | - | - | - | - | - | 629 | 1258 | - |
| Critical Hdwy | - | - | - | - | - | 7.04 | 7.54 | 6.54 | - |
| Critical Hdwy Stg 1 | - | - | - | - | - | - | - | - | - |
| Critical Hdwy Stg 2 | - | - | - | - | - | - | 6.54 | 5.54 | - |
| Follow-up Hdwy | - | - | - | - | - | 3.32 | 3.52 | 4.02 | - |
| Pot Cap-1 Maneuver | 0 | - | - | 0 | 0 | 418 | 367 | ~ 170 | 0 |
| Stage 1 | 0 | - | - | 0 | 0 | - | - | - | 0 |
| Stage 2 | 0 | - | - | 0 | 0 | - | 437 | 241 | 0 |
| Platoon blocked, % | | - | - | | | | | | |
| Mov Cap-1 Maneuver | - | - | - | - | - | 418 | 169 | ~ 170 | - |
| Mov Cap-2 Maneuver | - | - | - | - | - | - | 169 | ~ 170 | - |
| Stage 1 | - | - | - | - | - | - | - | - | - |
| Stage 2 | - | - | - | - | - | - | 201 | 241 | - |

| Approach | EB | NB | SB |
|---|---|---|---|
| HCM Control Delay, s | 0 | 23.3 | 216.7 |
| HCM LOS | | C | F |

| Minor Lane/Major Mvmt | NBLn1 | EBT | EBR | SBLn1 |
|---|---|---|---|---|
| Capacity (veh/h) | 418 | - | - | 170 |
| HCM Lane V/C Ratio | 0.54 | - | - | 1.281 |
| HCM Control Delay (s) | 23.3 | - | - | 216.7 |
| HCM Lane LOS | C | - | - | F |
| HCM 95th %tile Q(veh) | 3.1 | - | - | 12.5 |

| Notes | | | |
|---|---|---|---|
| ~: Volume exceeds capacity | $: Delay exceeds 300s | +: Computation Not Defined | *: All major volume in platoon |

| Intersection | |
|---|---|
| Int Delay, s/veh | 0.5 |

| Movement | EBT | EBR | WBL | WBT | NBL | NBR |
|---|---|---|---|---|---|---|
| Lane Configurations | | | | ↑↑ | ↰ | |
| Traffic Vol, veh/h | 0 | 0 | 0 | 1463 | 39 | 0 |
| Future Vol, veh/h | 0 | 0 | 0 | 1463 | 39 | 0 |
| Conflicting Peds, #/hr | 0 | 0 | 0 | 0 | 0 | 0 |
| Sign Control | Free | Free | Free | Free | Stop | Stop |
| RT Channelized | - | None | - | None | - | None |
| Storage Length | - | - | - | - | 0 | - |
| Veh in Median Storage, # | 0 | - | - | 0 | 0 | - |
| Grade, % | 0 | - | - | 0 | 0 | - |
| Peak Hour Factor | 90 | 90 | 90 | 90 | 90 | 90 |
| Heavy Vehicles, % | 2 | 2 | 2 | 2 | 2 | 2 |
| Mvmt Flow | 0 | 0 | 0 | 1626 | 43 | 0 |

| Major/Minor | Major2 | | Minor1 | |
|---|---|---|---|---|
| Conflicting Flow All | - | - | 813 | - |
| Stage 1 | - | - | 0 | - |
| Stage 2 | - | - | 813 | - |
| Critical Hdwy | - | - | 6.84 | - |
| Critical Hdwy Stg 1 | - | - | - | - |
| Critical Hdwy Stg 2 | - | - | 5.84 | - |
| Follow-up Hdwy | - | - | 3.52 | - |
| Pot Cap-1 Maneuver | 0 | - | 316 | 0 |
| Stage 1 | 0 | - | - | 0 |
| Stage 2 | 0 | - | 396 | 0 |
| Platoon blocked, % | | - | | |
| Mov Cap-1 Maneuver | - | - | 316 | - |
| Mov Cap-2 Maneuver | - | - | 316 | - |
| Stage 1 | - | - | - | - |
| Stage 2 | - | - | 396 | - |

| Approach | WB | NB |
|---|---|---|
| HCM Control Delay, s | 0 | 18.2 |
| HCM LOS | | C |

| Minor Lane/Major Mvmt | NBLn1 | WBT |
|---|---|---|
| Capacity (veh/h) | 316 | - |
| HCM Lane V/C Ratio | 0.137 | - |
| HCM Control Delay (s) | 18.2 | - |
| HCM Lane LOS | C | - |
| HCM 95th %tile Q(veh) | 0.5 | - |

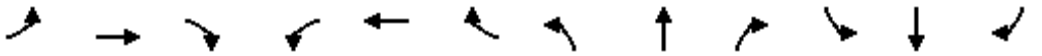

| Lane Group | EBL | EBT | EBR | WBL | WBT | WBR | NBL | NBT | NBR | SBL | SBT | SBR |
|---|---|---|---|---|---|---|---|---|---|---|---|---|
| Lane Configurations | | | | | | | | | | | | |
| Traffic Volume (vph) | 54 | 68 | 22 | 93 | 65 | 120 | 37 | 110 | 128 | 93 | 102 | 48 |
| Future Volume (vph) | 54 | 68 | 22 | 93 | 65 | 120 | 37 | 110 | 128 | 93 | 102 | 48 |
| Ideal Flow (vphpl) | 1900 | 1900 | 1900 | 1900 | 1900 | 1900 | 1900 | 1900 | 1900 | 1900 | 1900 | 1900 |
| Storage Length (ft) | 250 | | 0 | 150 | | 150 | 100 | | 0 | 150 | | 175 |
| Storage Lanes | 1 | | 0 | 1 | | 1 | 1 | | 0 | 1 | | 1 |
| Taper Length (ft) | 100 | | | 100 | | | 100 | | | 100 | | |
| Lane Util. Factor | 1.00 | 1.00 | 1.00 | 1.00 | 1.00 | 1.00 | 1.00 | 1.00 | 1.00 | 1.00 | 1.00 | 1.00 |
| Frt | | 0.964 | | | | 0.850 | | 0.919 | | | | 0.850 |
| Flt Protected | 0.950 | | | 0.950 | | | 0.950 | | | 0.950 | | |
| Satd. Flow (prot) | 1770 | 1796 | 0 | 1770 | 1863 | 1583 | 1770 | 1712 | 0 | 1770 | 1863 | 1583 |
| Flt Permitted | 0.710 | | | 0.692 | | | 0.684 | | | 0.596 | | |
| Satd. Flow (perm) | 1323 | 1796 | 0 | 1289 | 1863 | 1583 | 1274 | 1712 | 0 | 1110 | 1863 | 1583 |
| Right Turn on Red | | | No | | | No | | | No | | | No |
| Satd. Flow (RTOR) | | | | | | | | | | | | |
| Link Speed (mph) | | 45 | | | 45 | | | 45 | | | 45 | |
| Link Distance (ft) | | 1889 | | | 1311 | | | 1771 | | | 2925 | |
| Travel Time (s) | | 28.6 | | | 19.9 | | | 26.8 | | | 44.3 | |
| Peak Hour Factor | 0.90 | 0.90 | 0.90 | 0.90 | 0.90 | 0.90 | 0.90 | 0.90 | 0.90 | 0.90 | 0.90 | 0.90 |
| Adj. Flow (vph) | 60 | 76 | 24 | 103 | 72 | 133 | 41 | 122 | 142 | 103 | 113 | 53 |
| Shared Lane Traffic (%) | | | | | | | | | | | | |
| Lane Group Flow (vph) | 60 | 100 | 0 | 103 | 72 | 133 | 41 | 264 | 0 | 103 | 113 | 53 |
| Turn Type | Perm | NA | | Perm | NA | Perm | Perm | NA | | Perm | NA | Perm |
| Protected Phases | | 2 | | | 6 | | | 4 | | | 8 | |
| Permitted Phases | 2 | | | 6 | | 6 | 4 | | | 8 | | 8 |
| Detector Phase | 2 | 2 | | 6 | 6 | 6 | 4 | 4 | | 8 | 8 | 8 |
| Switch Phase | | | | | | | | | | | | |
| Minimum Initial (s) | 7.0 | 7.0 | | 7.0 | 7.0 | 7.0 | 7.0 | 7.0 | | 7.0 | 7.0 | 7.0 |
| Minimum Split (s) | 14.0 | 14.0 | | 14.0 | 14.0 | 14.0 | 14.0 | 14.0 | | 14.0 | 14.0 | 14.0 |
| Total Split (s) | 26.0 | 26.0 | | 26.0 | 26.0 | 26.0 | 34.0 | 34.0 | | 34.0 | 34.0 | 34.0 |
| Total Split (%) | 43.3% | 43.3% | | 43.3% | 43.3% | 43.3% | 56.7% | 56.7% | | 56.7% | 56.7% | 56.7% |
| Maximum Green (s) | 19.0 | 19.0 | | 19.0 | 19.0 | 19.0 | 27.0 | 27.0 | | 27.0 | 27.0 | 27.0 |
| Yellow Time (s) | 5.0 | 5.0 | | 5.0 | 5.0 | 5.0 | 5.0 | 5.0 | | 5.0 | 5.0 | 5.0 |
| All-Red Time (s) | 2.0 | 2.0 | | 2.0 | 2.0 | 2.0 | 2.0 | 2.0 | | 2.0 | 2.0 | 2.0 |
| Lost Time Adjust (s) | -2.0 | -2.0 | | -2.0 | -2.0 | -2.0 | -2.0 | -2.0 | | -2.0 | -2.0 | -2.0 |
| Total Lost Time (s) | 5.0 | 5.0 | | 5.0 | 5.0 | 5.0 | 5.0 | 5.0 | | 5.0 | 5.0 | 5.0 |
| Lead/Lag | | | | | | | | | | | | |
| Lead-Lag Optimize? | | | | | | | | | | | | |
| Vehicle Extension (s) | 3.0 | 3.0 | | 3.0 | 3.0 | 3.0 | 3.0 | 3.0 | | 3.0 | 3.0 | 3.0 |
| Recall Mode | Min | Min | | Min | Min | Min | None | None | | None | None | None |
| Act Effct Green (s) | 12.1 | 12.1 | | 12.1 | 12.1 | 12.1 | 12.7 | 12.7 | | 12.7 | 12.7 | 12.7 |
| Actuated g/C Ratio | 0.35 | 0.35 | | 0.35 | 0.35 | 0.35 | 0.36 | 0.36 | | 0.36 | 0.36 | 0.36 |
| v/c Ratio | 0.13 | 0.16 | | 0.23 | 0.11 | 0.24 | 0.09 | 0.43 | | 0.26 | 0.17 | 0.09 |
| Control Delay | 9.8 | 9.7 | | 10.8 | 9.3 | 10.6 | 7.7 | 10.6 | | 9.4 | 7.9 | 7.5 |
| Queue Delay | 0.0 | 0.0 | | 0.0 | 0.0 | 0.0 | 0.0 | 0.0 | | 0.0 | 0.0 | 0.0 |
| Total Delay | 9.8 | 9.7 | | 10.8 | 9.3 | 10.6 | 7.7 | 10.6 | | 9.4 | 7.9 | 7.5 |
| LOS | A | A | | B | A | B | A | B | | A | A | A |
| Approach Delay | | 9.7 | | | 10.3 | | | 10.2 | | | 8.4 | |
| Approach LOS | | A | | | B | | | B | | | A | |

| Lane Group | EBL | EBT | EBR | WBL | WBT | WBR | NBL | NBT | NBR | SBL | SBT | SBR |
|---|---|---|---|---|---|---|---|---|---|---|---|---|
| Queue Length 50th (ft) | 7 | 12 | | 13 | 8 | 16 | 4 | 31 | | 11 | 12 | 5 |
| Queue Length 95th (ft) | 27 | 39 | | 42 | 30 | 51 | 18 | 82 | | 38 | 37 | 21 |
| Internal Link Dist (ft) | | 1809 | | | 1231 | | | 1691 | | | 2845 | |
| Turn Bay Length (ft) | 250 | | | 150 | | 150 | 100 | | | 150 | | 175 |
| Base Capacity (vph) | 805 | 1093 | | 785 | 1134 | 964 | 1071 | 1440 | | 933 | 1567 | 1331 |
| Starvation Cap Reductn | 0 | 0 | | 0 | 0 | 0 | 0 | 0 | | 0 | 0 | 0 |
| Spillback Cap Reductn | 0 | 0 | | 0 | 0 | 0 | 0 | 0 | | 0 | 0 | 0 |
| Storage Cap Reductn | 0 | 0 | | 0 | 0 | 0 | 0 | 0 | | 0 | 0 | 0 |
| Reduced v/c Ratio | 0.07 | 0.09 | | 0.13 | 0.06 | 0.14 | 0.04 | 0.18 | | 0.11 | 0.07 | 0.04 |

| Intersection Summary | | | |
|---|---|---|---|
| Area Type: | Other | | |
| Cycle Length: 60 | | | |
| Actuated Cycle Length: 35 | | | |
| Natural Cycle: 40 | | | |
| Control Type: Actuated-Uncoordinated | | | |
| Maximum v/c Ratio: 0.43 | | | |
| Intersection Signal Delay: 9.7 | | Intersection LOS: A | |
| Intersection Capacity Utilization 43.8% | | ICU Level of Service A | |
| Analysis Period (min) 15 | | | |

Splits and Phases: 1: Richardson Rd & Olive Chapel Rd

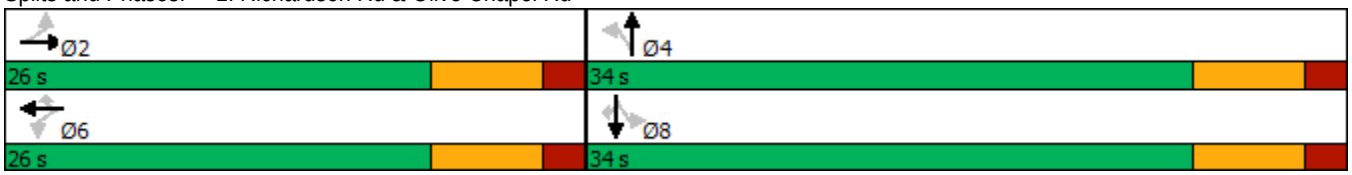

| Intersection | |
|---|---|
| Int Delay, s/veh | 2.9 |

| Movement | EBT | EBR | WBL | WBT | NBL | NBR |
|---|---|---|---|---|---|---|
| Lane Configurations | | | | | | |
| Traffic Vol, veh/h | 419 | 20 | 83 | 328 | 27 | 97 |
| Future Vol, veh/h | 419 | 20 | 83 | 328 | 27 | 97 |
| Conflicting Peds, #/hr | 0 | 0 | 0 | 0 | 0 | 0 |
| Sign Control | Free | Free | Free | Free | Stop | Stop |
| RT Channelized | - | None | - | None | - | None |
| Storage Length | - | - | - | - | 0 | - |
| Veh in Median Storage, # | 0 | - | - | 0 | 0 | - |
| Grade, % | 0 | - | - | 0 | 0 | - |
| Peak Hour Factor | 90 | 90 | 90 | 90 | 90 | 90 |
| Heavy Vehicles, % | 2 | 2 | 2 | 2 | 2 | 2 |
| Mvmt Flow | 466 | 22 | 92 | 364 | 30 | 108 |

| Major/Minor | Major1 | | Major2 | | Minor1 | |
|---|---|---|---|---|---|---|
| Conflicting Flow All | 0 | 0 | 488 | 0 | 1025 | 477 |
| Stage 1 | - | - | - | - | 477 | - |
| Stage 2 | - | - | - | - | 548 | - |
| Critical Hdwy | - | - | 4.12 | - | 6.42 | 6.22 |
| Critical Hdwy Stg 1 | - | - | - | - | 5.42 | - |
| Critical Hdwy Stg 2 | - | - | - | - | 5.42 | - |
| Follow-up Hdwy | - | - | 2.218 | - | 3.518 | 3.318 |
| Pot Cap-1 Maneuver | - | - | 1075 | - | 260 | 588 |
| Stage 1 | - | - | - | - | 624 | - |
| Stage 2 | - | - | - | - | 579 | - |
| Platoon blocked, % | - | - | | - | | |
| Mov Cap-1 Maneuver | - | - | 1075 | - | 232 | 588 |
| Mov Cap-2 Maneuver | - | - | - | - | 232 | - |
| Stage 1 | - | - | - | - | 624 | - |
| Stage 2 | - | - | - | - | 517 | - |

| Approach | EB | WB | NB |
|---|---|---|---|
| HCM Control Delay, s | 0 | 1.7 | 16.8 |
| HCM LOS | | | C |

| Minor Lane/Major Mvmt | NBLn1 | EBT | EBR | WBL | WBT |
|---|---|---|---|---|---|
| Capacity (veh/h) | 441 | - | - | 1075 | - |
| HCM Lane V/C Ratio | 0.312 | - | - | 0.086 | - |
| HCM Control Delay (s) | 16.8 | - | - | 8.7 | 0 |
| HCM Lane LOS | C | - | - | A | A |
| HCM 95th %tile Q(veh) | 1.3 | - | - | 0.3 | - |

| Intersection | |
|---|---|
| Int Delay, s/veh | 1.9 |

| Movement | EBL | EBT | EBR | WBL | WBT | WBR | NBL | NBT | NBR | SBL | SBT | SBR |
|---|---|---|---|---|---|---|---|---|---|---|---|---|
| Lane Configurations | | | | | | | | | | | | |
| Traffic Vol, veh/h | 1 | 0 | 1 | 15 | 0 | 103 | 2 | 478 | 10 | 48 | 503 | 1 |
| Future Vol, veh/h | 1 | 0 | 1 | 15 | 0 | 103 | 2 | 478 | 10 | 48 | 503 | 1 |
| Conflicting Peds, #/hr | 0 | 0 | 0 | 0 | 0 | 0 | 0 | 0 | 0 | 0 | 0 | 0 |
| Sign Control | Stop | Stop | Stop | Stop | Stop | Stop | Free | Free | Free | Free | Free | Free |
| RT Channelized | - | - | None | - | - | None | - | - | None | - | - | None |
| Storage Length | - | - | - | - | - | - | 125 | - | - | 150 | - | - |
| Veh in Median Storage, # | - | 1 | - | - | 1 | - | - | 0 | - | - | 0 | - |
| Grade, % | - | 0 | - | - | 0 | - | - | 0 | - | - | 0 | - |
| Peak Hour Factor | 90 | 90 | 90 | 90 | 90 | 90 | 90 | 90 | 90 | 90 | 90 | 90 |
| Heavy Vehicles, % | 2 | 2 | 2 | 2 | 2 | 2 | 2 | 2 | 2 | 2 | 2 | 2 |
| Mvmt Flow | 1 | 0 | 1 | 17 | 0 | 114 | 2 | 531 | 11 | 53 | 559 | 1 |

| Major/Minor | Minor2 | | | Minor1 | | | Major1 | | | Major2 | | |
|---|---|---|---|---|---|---|---|---|---|---|---|---|
| Conflicting Flow All | 1264 | 1212 | 560 | 1207 | 1207 | 537 | 560 | 0 | 0 | 542 | 0 | 0 |
| Stage 1 | 666 | 666 | - | 541 | 541 | - | - | - | - | - | - | - |
| Stage 2 | 598 | 546 | - | 666 | 666 | - | - | - | - | - | - | - |
| Critical Hdwy | 7.12 | 6.52 | 6.22 | 7.12 | 6.52 | 6.22 | 4.12 | - | - | 4.12 | - | - |
| Critical Hdwy Stg 1 | 6.12 | 5.52 | - | 6.12 | 5.52 | - | - | - | - | - | - | - |
| Critical Hdwy Stg 2 | 6.12 | 5.52 | - | 6.12 | 5.52 | - | - | - | - | - | - | - |
| Follow-up Hdwy | 3.518 | 4.018 | 3.318 | 3.518 | 4.018 | 3.318 | 2.218 | - | - | 2.218 | - | - |
| Pot Cap-1 Maneuver | 146 | 182 | 528 | 160 | 183 | 544 | 1011 | - | - | 1027 | - | - |
| Stage 1 | 449 | 457 | - | 525 | 521 | - | - | - | - | - | - | - |
| Stage 2 | 489 | 518 | - | 449 | 457 | - | - | - | - | - | - | - |
| Platoon blocked, % | | | | | | | | - | - | | - | - |
| Mov Cap-1 Maneuver | 111 | 172 | 528 | 153 | 173 | 544 | 1011 | - | - | 1027 | - | - |
| Mov Cap-2 Maneuver | 223 | 283 | - | 282 | 293 | - | - | - | - | - | - | - |
| Stage 1 | 448 | 433 | - | 524 | 520 | - | - | - | - | - | - | - |
| Stage 2 | 385 | 517 | - | 425 | 433 | - | - | - | - | - | - | - |

| Approach | EB | WB | NB | SB |
|---|---|---|---|---|
| HCM Control Delay, s | 16.5 | 15.1 | 0 | 0.8 |
| HCM LOS | C | C | | |

| Minor Lane/Major Mvmt | NBL | NBT | NBR | EBLn1 | WBLn1 | SBL | SBT | SBR |
|---|---|---|---|---|---|---|---|---|
| Capacity (veh/h) | 1011 | - | - | 314 | 487 | 1027 | - | - |
| HCM Lane V/C Ratio | 0.002 | - | - | 0.007 | 0.269 | 0.052 | - | - |
| HCM Control Delay (s) | 8.6 | - | - | 16.5 | 15.1 | 8.7 | - | - |
| HCM Lane LOS | A | - | - | C | C | A | - | - |
| HCM 95th %tile Q(veh) | 0 | - | - | 0 | 1.1 | 0.2 | - | - |

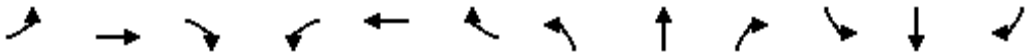

| Lane Group | EBL | EBT | EBR | WBL | WBT | WBR | NBL | NBT | NBR | SBL | SBT | SBR |
|---|---|---|---|---|---|---|---|---|---|---|---|---|
| Lane Configurations | | | | | | | | | | | | |
| Traffic Volume (vph) | 0 | 1124 | 267 | 0 | 0 | 0 | 0 | 0 | 915 | 0 | 719 | 0 |
| Future Volume (vph) | 0 | 1124 | 267 | 0 | 0 | 0 | 0 | 0 | 915 | 0 | 719 | 0 |
| Ideal Flow (vphpl) | 1900 | 1900 | 1900 | 1900 | 1900 | 1900 | 1900 | 1900 | 1900 | 1900 | 1900 | 1900 |
| Grade (%) | | -2% | | | 0% | | | 1% | | | 0% | |
| Storage Length (ft) | 0 | | 175 | 0 | | 0 | 0 | | 0 | 0 | | 0 |
| Storage Lanes | 0 | | 1 | 0 | | 0 | 0 | | 2 | 0 | | 0 |
| Taper Length (ft) | 100 | | | 100 | | | 100 | | | 100 | | |
| Lane Util. Factor | 1.00 | 0.95 | 1.00 | 1.00 | 1.00 | 1.00 | 1.00 | 1.00 | 0.88 | 0.95 | 0.95 | 1.00 |
| Frt | | | 0.850 | | | | | | 0.850 | | | |
| Flt Protected | | | | | | | | | | | | |
| Satd. Flow (prot) | 0 | 3575 | 1599 | 0 | 0 | 0 | 0 | 0 | 2773 | 0 | 3539 | 0 |
| Flt Permitted | | | | | | | | | | | | |
| Satd. Flow (perm) | 0 | 3575 | 1599 | 0 | 0 | 0 | 0 | 0 | 2773 | 0 | 3539 | 0 |
| Right Turn on Red | | | No | | | No | | | No | No | | No |
| Satd. Flow (RTOR) | | | | | | | | | | | | |
| Link Speed (mph) | | 55 | | | 55 | | | 45 | | | 35 | |
| Link Distance (ft) | | 3066 | | | 489 | | | 978 | | | 454 | |
| Travel Time (s) | | 38.0 | | | 6.1 | | | 14.8 | | | 8.8 | |
| Peak Hour Factor | 0.90 | 0.90 | 0.90 | 0.90 | 0.90 | 0.90 | 0.90 | 0.90 | 0.90 | 0.90 | 0.90 | 0.90 |
| Adj. Flow (vph) | 0 | 1249 | 297 | 0 | 0 | 0 | 0 | 0 | 1017 | 0 | 799 | 0 |
| Shared Lane Traffic (%) | | | | | | | | | | | | |
| Lane Group Flow (vph) | 0 | 1249 | 297 | 0 | 0 | 0 | 0 | 0 | 1017 | 0 | 799 | 0 |
| Turn Type | | NA | Perm | | | | | | Perm | | NA | |
| Protected Phases | | 2 | | | | | | | | | 8 | |
| Permitted Phases | | | 2 | | | | | | 8 | 8 | | |
| Detector Phase | | 2 | 2 | | | | | | 8 | 8 | 8 | |
| Switch Phase | | | | | | | | | | | | |
| Minimum Initial (s) | | 14.0 | 14.0 | | | | | | 7.0 | 7.0 | 7.0 | |
| Minimum Split (s) | | 20.8 | 20.8 | | | | | | 13.2 | 13.2 | 13.2 | |
| Total Split (s) | | 30.0 | 30.0 | | | | | | 30.0 | 30.0 | 30.0 | |
| Total Split (%) | | 50.0% | 50.0% | | | | | | 50.0% | 50.0% | 50.0% | |
| Maximum Green (s) | | 23.2 | 23.2 | | | | | | 23.8 | 23.8 | 23.8 | |
| Yellow Time (s) | | 5.4 | 5.4 | | | | | | 3.0 | 3.0 | 3.0 | |
| All-Red Time (s) | | 1.4 | 1.4 | | | | | | 3.2 | 3.2 | 3.2 | |
| Lost Time Adjust (s) | | -1.8 | -1.8 | | | | | | -1.2 | | -1.2 | |
| Total Lost Time (s) | | 5.0 | 5.0 | | | | | | 5.0 | | 5.0 | |
| Lead/Lag | | | | | | | | | | | | |
| Lead-Lag Optimize? | | | | | | | | | | | | |
| Vehicle Extension (s) | | 6.0 | 6.0 | | | | | | 2.0 | 2.0 | 2.0 | |
| Minimum Gap (s) | | 3.4 | 3.4 | | | | | | 0.2 | 0.2 | 0.2 | |
| Time Before Reduce (s) | | 15.0 | 15.0 | | | | | | 0.0 | 0.0 | 0.0 | |
| Time To Reduce (s) | | 45.0 | 45.0 | | | | | | 0.0 | 0.0 | 0.0 | |
| Recall Mode | | C-Min | C-Min | | | | | | None | None | None | |
| Act Effct Green (s) | | 25.2 | 25.2 | | | | | | 24.8 | | 24.8 | |
| Actuated g/C Ratio | | 0.42 | 0.42 | | | | | | 0.41 | | 0.41 | |
| v/c Ratio | | 0.83 | 0.44 | | | | | | 0.89 | | 0.55 | |
| Control Delay | | 22.1 | 15.1 | | | | | | 28.2 | | 10.9 | |
| Queue Delay | | 0.0 | 0.0 | | | | | | 0.0 | | 0.0 | |

| Lane Group | EBL | EBT | EBR | WBL | WBT | WBR | NBL | NBT | NBR | SBL | SBT | SBR |
|---|---|---|---|---|---|---|---|---|---|---|---|---|
| Total Delay | | 22.1 | 15.1 | | | | | | 28.2 | | 10.9 | |
| LOS | | C | B | | | | | | C | | B | |
| Approach Delay | | 20.7 | | | | | | 28.2 | | | 10.9 | |
| Approach LOS | | C | | | | | | C | | | B | |
| Queue Length 50th (ft) | | 203 | 74 | | | | | | 183 | | 106 | |
| Queue Length 95th (ft) | | #296 | 132 | | | | | | #311 | | m120 | |
| Internal Link Dist (ft) | | 2986 | | | 409 | | | 898 | | | 374 | |
| Turn Bay Length (ft) | | | 175 | | | | | | | | | |
| Base Capacity (vph) | | 1502 | 672 | | | | | | 1155 | | 1474 | |
| Starvation Cap Reductn | | 0 | 0 | | | | | | 0 | | 0 | |
| Spillback Cap Reductn | | 0 | 0 | | | | | | 0 | | 0 | |
| Storage Cap Reductn | | 0 | 0 | | | | | | 0 | | 0 | |
| Reduced v/c Ratio | | 0.83 | 0.44 | | | | | | 0.88 | | 0.54 | |

| Intersection Summary | | | |
|---|---|---|---|
| Area Type: | Other | | |
| Cycle Length: 60 | | | |
| Actuated Cycle Length: 60 | | | |
| Offset: 0 (0%), Referenced to phase 2:EBT, Start of Green | | | |
| Natural Cycle: 55 | | | |
| Control Type: Actuated-Coordinated | | | |
| Maximum v/c Ratio: 0.89 | | | |
| Intersection Signal Delay: 20.7 | | Intersection LOS: C | |
| Intersection Capacity Utilization 99.9% | | ICU Level of Service F | |
| Analysis Period (min) 15 | | | |
| # 95th percentile volume exceeds capacity, queue may be longer. | | | |
| Queue shown is maximum after two cycles. | | | |
| m Volume for 95th percentile queue is metered by upstream signal. | | | |

Splits and Phases: 4: Richardson Rd & US 64 EB

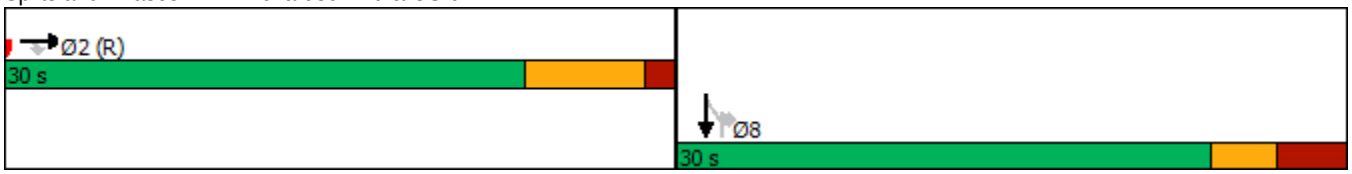

| Lane Group | EBT | EBR | WBL | WBT | NBL | NBR |
|---|---|---|---|---|---|---|
| Lane Configurations | | | | ↑↑ | ↰↰ | |
| Traffic Volume (vph) | 0 | 0 | 0 | 1770 | 247 | 0 |
| Future Volume (vph) | 0 | 0 | 0 | 1770 | 247 | 0 |
| Ideal Flow (vphpl) | 1900 | 1900 | 1900 | 1900 | 1900 | 1900 |
| Lane Util. Factor | 1.00 | 1.00 | 1.00 | 0.95 | 0.97 | 1.00 |
| Frt | | | | | | |
| Flt Protected | | | | | 0.950 | |
| Satd. Flow (prot) | 0 | 0 | 0 | 3539 | 3433 | 0 |
| Flt Permitted | | | | | 0.950 | |
| Satd. Flow (perm) | 0 | 0 | 0 | 3539 | 3433 | 0 |
| Right Turn on Red | | No | | | No | No |
| Satd. Flow (RTOR) | | | | | | |
| Link Speed (mph) | 55 | | | 55 | 25 | |
| Link Distance (ft) | 459 | | | 2512 | 426 | |
| Travel Time (s) | 5.7 | | | 31.1 | 11.6 | |
| Peak Hour Factor | 0.90 | 0.90 | 0.90 | 0.90 | 0.90 | 0.90 |
| Adj. Flow (vph) | 0 | 0 | 0 | 1967 | 274 | 0 |
| Shared Lane Traffic (%) | | | | | | |
| Lane Group Flow (vph) | 0 | 0 | 0 | 1967 | 274 | 0 |
| Turn Type | | | | NA | Prot | |
| Protected Phases | | | | 6 | 8 | |
| Permitted Phases | | | | | | |
| Detector Phase | | | | 6 | 8 | |
| Switch Phase | | | | | | |
| Minimum Initial (s) | | | | 14.0 | 7.0 | |
| Minimum Split (s) | | | | 20.2 | 13.3 | |
| Total Split (s) | | | | 46.7 | 13.3 | |
| Total Split (%) | | | | 77.8% | 22.2% | |
| Maximum Green (s) | | | | 40.5 | 7.0 | |
| Yellow Time (s) | | | | 5.2 | 3.0 | |
| All-Red Time (s) | | | | 1.0 | 3.3 | |
| Lost Time Adjust (s) | | | | -1.2 | -1.3 | |
| Total Lost Time (s) | | | | 5.0 | 5.0 | |
| Lead/Lag | | | | | | |
| Lead-Lag Optimize? | | | | | | |
| Vehicle Extension (s) | | | | 6.0 | 2.0 | |
| Minimum Gap (s) | | | | 3.4 | 0.2 | |
| Time Before Reduce (s) | | | | 15.0 | 0.0 | |
| Time To Reduce (s) | | | | 45.0 | 0.0 | |
| Recall Mode | | | | C-Min | None | |
| Act Effct Green (s) | | | | 41.7 | 8.3 | |
| Actuated g/C Ratio | | | | 0.70 | 0.14 | |
| v/c Ratio | | | | 0.80 | 0.58 | |
| Control Delay | | | | 9.6 | 27.8 | |
| Queue Delay | | | | 0.0 | 0.0 | |
| Total Delay | | | | 9.6 | 27.8 | |
| LOS | | | | A | C | |
| Approach Delay | | | | 9.6 | 27.8 | |
| Approach LOS | | | | A | C | |

| Lane Group | EBT | EBR | WBL | WBT | NBL | NBR |
|---|---|---|---|---|---|---|
| Queue Length 50th (ft) | | | | 199 | 50 | |
| Queue Length 95th (ft) | | | | 288 | m60 | |
| Internal Link Dist (ft) | 379 | | | 2432 | 346 | |
| Turn Bay Length (ft) | | | | | | |
| Base Capacity (vph) | | | | 2459 | 474 | |
| Starvation Cap Reductn | | | | 0 | 0 | |
| Spillback Cap Reductn | | | | 0 | 0 | |
| Storage Cap Reductn | | | | 0 | 0 | |
| Reduced v/c Ratio | | | | 0.80 | 0.58 | |

| Intersection Summary | | | |
|---|---|---|---|
| Area Type: | Other | | |
| Cycle Length: 60 | | | |
| Actuated Cycle Length: 60 | | | |
| Offset: 0 (0%), Referenced to phase 6:WBT, Start of Green | | | |
| Natural Cycle: 60 | | | |
| Control Type: Actuated-Coordinated | | | |
| Maximum v/c Ratio: 0.80 | | | |
| Intersection Signal Delay: 11.8 | | Intersection LOS: B | |
| Intersection Capacity Utilization 64.3% | | ICU Level of Service C | |
| Analysis Period (min) 15 | | | |
| m Volume for 95th percentile queue is metered by upstream signal. | | | |

Splits and Phases: 5: U-Turn East & US 64 WB



| Lane Group | EBL | EBT | EBR | WBL | WBT | WBR | NBL | NBT | NBR | SBL | SBT | SBR |
|---|---|---|---|---|---|---|---|---|---|---|---|---|
| Lane Configurations | | | | | | | | | | | | |
| Traffic Volume (vph) | 58 | 119 | 41 | 167 | 104 | 139 | 31 | 103 | 165 | 139 | 147 | 55 |
| Future Volume (vph) | 58 | 119 | 41 | 167 | 104 | 139 | 31 | 103 | 165 | 139 | 147 | 55 |
| Ideal Flow (vphpl) | 1900 | 1900 | 1900 | 1900 | 1900 | 1900 | 1900 | 1900 | 1900 | 1900 | 1900 | 1900 |
| Storage Length (ft) | 250 | | 0 | 150 | | 150 | 100 | | 0 | 150 | | 175 |
| Storage Lanes | 1 | | 0 | 1 | | 1 | 1 | | 0 | 1 | | 1 |
| Taper Length (ft) | 100 | | | 100 | | | 100 | | | 100 | | |
| Lane Util. Factor | 1.00 | 1.00 | 1.00 | 1.00 | 1.00 | 1.00 | 1.00 | 1.00 | 1.00 | 1.00 | 1.00 | 1.00 |
| Frt | | 0.961 | | | | 0.850 | | 0.908 | | | | 0.850 |
| Flt Protected | 0.950 | | | 0.950 | | | 0.950 | | | 0.950 | | |
| Satd. Flow (prot) | 1770 | 1790 | 0 | 1770 | 1863 | 1583 | 1770 | 1691 | 0 | 1770 | 1863 | 1583 |
| Flt Permitted | 0.682 | | | 0.645 | | | 0.654 | | | 0.579 | | |
| Satd. Flow (perm) | 1270 | 1790 | 0 | 1201 | 1863 | 1583 | 1218 | 1691 | 0 | 1079 | 1863 | 1583 |
| Right Turn on Red | | | No | | | No | | | No | | | No |
| Satd. Flow (RTOR) | | | | | | | | | | | | |
| Link Speed (mph) | | 45 | | | 45 | | | 45 | | | 45 | |
| Link Distance (ft) | | 1889 | | | 1311 | | | 1771 | | | 2925 | |
| Travel Time (s) | | 28.6 | | | 19.9 | | | 26.8 | | | 44.3 | |
| Peak Hour Factor | 0.90 | 0.90 | 0.90 | 0.90 | 0.90 | 0.90 | 0.90 | 0.90 | 0.90 | 0.90 | 0.90 | 0.90 |
| Adj. Flow (vph) | 64 | 132 | 46 | 186 | 116 | 154 | 34 | 114 | 183 | 154 | 163 | 61 |
| Shared Lane Traffic (%) | | | | | | | | | | | | |
| Lane Group Flow (vph) | 64 | 178 | 0 | 186 | 116 | 154 | 34 | 297 | 0 | 154 | 163 | 61 |
| Turn Type | Perm | NA | | Perm | NA | Perm | Perm | NA | | Perm | NA | Perm |
| Protected Phases | | 2 | | | 6 | | | 4 | | | 8 | |
| Permitted Phases | 2 | | | 6 | | 6 | 4 | | | 8 | | 8 |
| Detector Phase | 2 | 2 | | 6 | 6 | 6 | 4 | 4 | | 8 | 8 | 8 |
| Switch Phase | | | | | | | | | | | | |
| Minimum Initial (s) | 7.0 | 7.0 | | 7.0 | 7.0 | 7.0 | 7.0 | 7.0 | | 7.0 | 7.0 | 7.0 |
| Minimum Split (s) | 14.0 | 14.0 | | 14.0 | 14.0 | 14.0 | 14.0 | 14.0 | | 14.0 | 14.0 | 14.0 |
| Total Split (s) | 29.0 | 29.0 | | 29.0 | 29.0 | 29.0 | 31.0 | 31.0 | | 31.0 | 31.0 | 31.0 |
| Total Split (%) | 48.3% | 48.3% | | 48.3% | 48.3% | 48.3% | 51.7% | 51.7% | | 51.7% | 51.7% | 51.7% |
| Maximum Green (s) | 22.0 | 22.0 | | 22.0 | 22.0 | 22.0 | 24.0 | 24.0 | | 24.0 | 24.0 | 24.0 |
| Yellow Time (s) | 5.0 | 5.0 | | 5.0 | 5.0 | 5.0 | 5.0 | 5.0 | | 5.0 | 5.0 | 5.0 |
| All-Red Time (s) | 2.0 | 2.0 | | 2.0 | 2.0 | 2.0 | 2.0 | 2.0 | | 2.0 | 2.0 | 2.0 |
| Lost Time Adjust (s) | -2.0 | -2.0 | | -2.0 | -2.0 | -2.0 | -2.0 | -2.0 | | -2.0 | -2.0 | -2.0 |
| Total Lost Time (s) | 5.0 | 5.0 | | 5.0 | 5.0 | 5.0 | 5.0 | 5.0 | | 5.0 | 5.0 | 5.0 |
| Lead/Lag | | | | | | | | | | | | |
| Lead-Lag Optimize? | | | | | | | | | | | | |
| Vehicle Extension (s) | 3.0 | 3.0 | | 3.0 | 3.0 | 3.0 | 3.0 | 3.0 | | 3.0 | 3.0 | 3.0 |
| Recall Mode | Min | Min | | Min | Min | Min | None | None | | None | None | None |
| Act Effct Green (s) | 14.2 | 14.2 | | 14.2 | 14.2 | 14.2 | 14.6 | 14.6 | | 14.6 | 14.6 | 14.6 |
| Actuated g/C Ratio | 0.36 | 0.36 | | 0.36 | 0.36 | 0.36 | 0.37 | 0.37 | | 0.37 | 0.37 | 0.37 |
| v/c Ratio | 0.14 | 0.28 | | 0.43 | 0.17 | 0.27 | 0.08 | 0.47 | | 0.39 | 0.24 | 0.10 |
| Control Delay | 10.2 | 10.9 | | 13.9 | 10.0 | 11.1 | 9.6 | 13.1 | | 13.4 | 10.4 | 9.6 |
| Queue Delay | 0.0 | 0.0 | | 0.0 | 0.0 | 0.0 | 0.0 | 0.0 | | 0.0 | 0.0 | 0.0 |
| Total Delay | 10.2 | 10.9 | | 13.9 | 10.0 | 11.1 | 9.6 | 13.1 | | 13.4 | 10.4 | 9.6 |
| LOS | B | B | | B | B | B | A | B | | B | B | A |
| Approach Delay | | 10.7 | | | 12.0 | | | 12.7 | | | 11.5 | |
| Approach LOS | | B | | | B | | | B | | | B | |

| Lane Group | EBL | EBT | EBR | WBL | WBT | WBR | NBL | NBT | NBR | SBL | SBT | SBR |
|---|---|---|---|---|---|---|---|---|---|---|---|---|
| Queue Length 50th (ft) | 8 | 24 | | 27 | 15 | 21 | 4 | 43 | | 21 | 21 | 8 |
| Queue Length 95th (ft) | 33 | 73 | | 86 | 50 | 66 | 21 | 124 | | 73 | 67 | 31 |
| Internal Link Dist (ft) | | 1809 | | | 1231 | | | 1691 | | | 2845 | |
| Turn Bay Length (ft) | 250 | | | 150 | | 150 | 100 | | | 150 | | 175 |
| Base Capacity (vph) | 817 | 1152 | | 773 | 1199 | 1018 | 849 | 1179 | | 752 | 1299 | 1103 |
| Starvation Cap Reductn | 0 | 0 | | 0 | 0 | 0 | 0 | 0 | | 0 | 0 | 0 |
| Spillback Cap Reductn | 0 | 0 | | 0 | 0 | 0 | 0 | 0 | | 0 | 0 | 0 |
| Storage Cap Reductn | 0 | 0 | | 0 | 0 | 0 | 0 | 0 | | 0 | 0 | 0 |
| Reduced v/c Ratio | 0.08 | 0.15 | | 0.24 | 0.10 | 0.15 | 0.04 | 0.25 | | 0.20 | 0.13 | 0.06 |

| Intersection Summary | | | |
|---|---|---|---|
| Area Type: | Other | | |
| Cycle Length: 60 | | | |
| Actuated Cycle Length: 39.4 | | | |
| Natural Cycle: 40 | | | |
| Control Type: Actuated-Uncoordinated | | | |
| Maximum v/c Ratio: 0.47 | | | |
| Intersection Signal Delay: 11.8 | | Intersection LOS: B | |
| Intersection Capacity Utilization 57.9% | | ICU Level of Service B | |
| Analysis Period (min) 15 | | | |

Splits and Phases: 1: Richardson Rd & Olive Chapel Rd

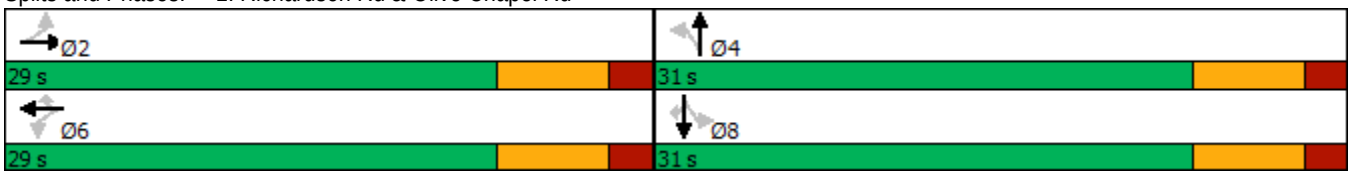

| Intersection | |
|---|---|
| Int Delay, s/veh | 13.1 |

| Movement | EBT | EBR | WBL | WBT | NBL | NBR |
|---|---|---|---|---|---|---|
| Lane Configurations | | | | | | |
| Traffic Vol, veh/h | 520 | 46 | 235 | 571 | 28 | 168 |
| Future Vol, veh/h | 520 | 46 | 235 | 571 | 28 | 168 |
| Conflicting Peds, #/hr | 0 | 0 | 0 | 0 | 0 | 0 |
| Sign Control | Free | Free | Free | Free | Stop | Stop |
| RT Channelized | - | None | - | None | - | None |
| Storage Length | - | - | - | - | 0 | - |
| Veh in Median Storage, # | 0 | - | - | 0 | 0 | - |
| Grade, % | 0 | - | - | 0 | 0 | - |
| Peak Hour Factor | 90 | 90 | 90 | 90 | 90 | 90 |
| Heavy Vehicles, % | 2 | 2 | 2 | 2 | 2 | 2 |
| Mvmt Flow | 578 | 51 | 261 | 634 | 31 | 187 |

| Major/Minor | Major1 | | Major2 | | Minor1 | |
|---|---|---|---|---|---|---|
| Conflicting Flow All | 0 | 0 | 629 | 0 | 1760 | 604 |
| Stage 1 | - | - | - | - | 604 | - |
| Stage 2 | - | - | - | - | 1156 | - |
| Critical Hdwy | - | - | 4.12 | - | 6.42 | 6.22 |
| Critical Hdwy Stg 1 | - | - | - | - | 5.42 | - |
| Critical Hdwy Stg 2 | - | - | - | - | 5.42 | - |
| Follow-up Hdwy | - | - | 2.218 | - | 3.518 | 3.318 |
| Pot Cap-1 Maneuver | - | - | 953 | - | 93 | 498 |
| Stage 1 | - | - | - | - | 546 | - |
| Stage 2 | - | - | - | - | 300 | - |
| Platoon blocked, % | - | - | | - | | |
| Mov Cap-1 Maneuver | - | - | 953 | - | 54 | 498 |
| Mov Cap-2 Maneuver | - | - | - | - | 54 | - |
| Stage 1 | - | - | - | - | 546 | - |
| Stage 2 | - | - | - | - | 173 | - |

| Approach | EB | WB | NB |
|---|---|---|---|
| HCM Control Delay, s | 0 | 3 | 92.5 |
| HCM LOS | | | F |

| Minor Lane/Major Mvmt | NBLn1 | EBT | EBR | WBL | WBT |
|---|---|---|---|---|---|
| Capacity (veh/h) | 229 | - | - | 953 | - |
| HCM Lane V/C Ratio | 0.951 | - | - | 0.274 | - |
| HCM Control Delay (s) | 92.5 | - | - | 10.2 | 0 |
| HCM Lane LOS | F | - | - | B | A |
| HCM 95th %tile Q(veh) | 8.4 | - | - | 1.1 | - |

| Intersection | |
|---|---|
| Int Delay, s/veh | 2 |

| Movement | EBL | EBT | EBR | WBL | WBT | WBR | NBL | NBT | NBR | SBL | SBT | SBR |
|---|---|---|---|---|---|---|---|---|---|---|---|---|
| Lane Configurations | | ↔ | | | ↔ | | ↰ | ↑ | | ↰ | ↑ | |
| Traffic Vol, veh/h | 2 | 1 | 3 | 15 | 1 | 76 | 2 | 599 | 23 | 111 | 648 | 3 |
| Future Vol, veh/h | 2 | 1 | 3 | 15 | 1 | 76 | 2 | 599 | 23 | 111 | 648 | 3 |
| Conflicting Peds, #/hr | 0 | 0 | 0 | 0 | 0 | 0 | 0 | 0 | 0 | 0 | 0 | 0 |
| Sign Control | Stop | Stop | Stop | Stop | Stop | Stop | Free | Free | Free | Free | Free | Free |
| RT Channelized | - | - | None | - | - | None | - | - | None | - | - | None |
| Storage Length | - | - | - | - | - | - | 125 | - | - | 150 | - | - |
| Veh in Median Storage, # | - | 1 | - | - | 1 | - | - | 0 | - | - | 0 | - |
| Grade, % | - | 0 | - | - | 0 | - | - | 0 | - | - | 0 | - |
| Peak Hour Factor | 90 | 90 | 90 | 90 | 90 | 90 | 90 | 90 | 90 | 90 | 90 | 90 |
| Heavy Vehicles, % | 2 | 2 | 2 | 2 | 2 | 2 | 2 | 2 | 2 | 2 | 2 | 2 |
| Mvmt Flow | 2 | 1 | 3 | 17 | 1 | 84 | 2 | 666 | 26 | 123 | 720 | 3 |

| Major/Minor | Minor2 | | | Minor1 | | | Major1 | | | Major2 | | |
|---|---|---|---|---|---|---|---|---|---|---|---|---|
| Conflicting Flow All | 1694 | 1664 | 722 | 1653 | 1652 | 679 | 723 | 0 | 0 | 692 | 0 | 0 |
| Stage 1 | 968 | 968 | - | 683 | 683 | - | - | - | - | - | - | - |
| Stage 2 | 726 | 696 | - | 970 | 969 | - | - | - | - | - | - | - |
| Critical Hdwy | 7.12 | 6.52 | 6.22 | 7.12 | 6.52 | 6.22 | 4.12 | - | - | 4.12 | - | - |
| Critical Hdwy Stg 1 | 6.12 | 5.52 | - | 6.12 | 5.52 | - | - | - | - | - | - | - |
| Critical Hdwy Stg 2 | 6.12 | 5.52 | - | 6.12 | 5.52 | - | - | - | - | - | - | - |
| Follow-up Hdwy | 3.518 | 4.018 | 3.318 | 3.518 | 4.018 | 3.318 | 2.218 | - | - | 2.218 | - | - |
| Pot Cap-1 Maneuver | 73 | 97 | 427 | 78 | 98 | 452 | 879 | - | - | 903 | - | - |
| Stage 1 | 305 | 332 | - | 439 | 449 | - | - | - | - | - | - | - |
| Stage 2 | 416 | 443 | - | 304 | 332 | - | - | - | - | - | - | - |
| Platoon blocked, % | | | | | | | | - | - | | - | - |
| Mov Cap-1 Maneuver | 53 | 84 | 427 | 69 | 84 | 452 | 879 | - | - | 903 | - | - |
| Mov Cap-2 Maneuver | 138 | 176 | - | 177 | 195 | - | - | - | - | - | - | - |
| Stage 1 | 304 | 287 | - | 438 | 448 | - | - | - | - | - | - | - |
| Stage 2 | 337 | 442 | - | 260 | 287 | - | - | - | - | - | - | - |

| Approach | EB | WB | NB | SB |
|---|---|---|---|---|
| HCM Control Delay, s | 21.8 | 19.1 | 0 | 1.4 |
| HCM LOS | C | C | | |

| Minor Lane/Major Mvmt | NBL | NBT | NBR | EBLn1 | WBLn1 | SBL | SBT | SBR |
|---|---|---|---|---|---|---|---|---|
| Capacity (veh/h) | 879 | - | - | 221 | 357 | 903 | - | - |
| HCM Lane V/C Ratio | 0.003 | - | - | 0.03 | 0.286 | 0.137 | - | - |
| HCM Control Delay (s) | 9.1 | - | - | 21.8 | 19.1 | 9.6 | - | - |
| HCM Lane LOS | A | - | - | C | C | A | - | - |
| HCM 95th %tile Q(veh) | 0 | - | - | 0.1 | 1.2 | 0.5 | - | - |

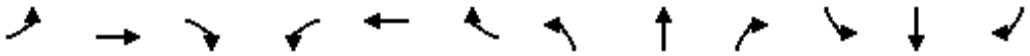

| Lane Group | EBL | EBT | EBR | WBL | WBT | WBR | NBL | NBT | NBR | SBL | SBT | SBR |
|---|---|---|---|---|---|---|---|---|---|---|---|---|
| Lane Configurations | | | | | | | | | | | | |
| Traffic Volume (vph) | 0 | 1166 | 388 | 0 | 0 | 0 | 0 | 0 | 1331 | 0 | 971 | 0 |
| Future Volume (vph) | 0 | 1166 | 388 | 0 | 0 | 0 | 0 | 0 | 1331 | 0 | 971 | 0 |
| Ideal Flow (vphpl) | 1900 | 1900 | 1900 | 1900 | 1900 | 1900 | 1900 | 1900 | 1900 | 1900 | 1900 | 1900 |
| Grade (%) | | -2% | | | 0% | | | 1% | | | 0% | |
| Storage Length (ft) | 0 | | 175 | 0 | | 0 | 0 | | 0 | 0 | | 0 |
| Storage Lanes | 0 | | 1 | 0 | | 0 | 0 | | 2 | 0 | | 0 |
| Taper Length (ft) | 100 | | | 100 | | | 100 | | | 100 | | |
| Lane Util. Factor | 1.00 | 0.95 | 1.00 | 1.00 | 1.00 | 1.00 | 1.00 | 1.00 | 0.88 | 0.95 | 0.95 | 1.00 |
| Frt | | | 0.850 | | | | | | 0.850 | | | |
| Flt Protected | | | | | | | | | | | | |
| Satd. Flow (prot) | 0 | 3575 | 1599 | 0 | 0 | 0 | 0 | 0 | 2773 | 0 | 3539 | 0 |
| Flt Permitted | | | | | | | | | | | | |
| Satd. Flow (perm) | 0 | 3575 | 1599 | 0 | 0 | 0 | 0 | 0 | 2773 | 0 | 3539 | 0 |
| Right Turn on Red | | | No | | | No | | | No | No | | No |
| Satd. Flow (RTOR) | | | | | | | | | | | | |
| Link Speed (mph) | | 55 | | | 55 | | | 45 | | | 35 | |
| Link Distance (ft) | | 3066 | | | 489 | | | 978 | | | 454 | |
| Travel Time (s) | | 38.0 | | | 6.1 | | | 14.8 | | | 8.8 | |
| Peak Hour Factor | 0.90 | 0.90 | 0.90 | 0.90 | 0.90 | 0.90 | 0.90 | 0.90 | 0.90 | 0.90 | 0.90 | 0.90 |
| Adj. Flow (vph) | 0 | 1296 | 431 | 0 | 0 | 0 | 0 | 0 | 1479 | 0 | 1079 | 0 |
| Shared Lane Traffic (%) | | | | | | | | | | | | |
| Lane Group Flow (vph) | 0 | 1296 | 431 | 0 | 0 | 0 | 0 | 0 | 1479 | 0 | 1079 | 0 |
| Turn Type | | NA | Perm | | | | | | Perm | | NA | |
| Protected Phases | | 2 | | | | | | | | | 8 | |
| Permitted Phases | | | 2 | | | | | | 8 | 8 | | |
| Detector Phase | | 2 | 2 | | | | | | 8 | 8 | 8 | |
| Switch Phase | | | | | | | | | | | | |
| Minimum Initial (s) | | 14.0 | 14.0 | | | | | | 7.0 | 7.0 | 7.0 | |
| Minimum Split (s) | | 20.8 | 20.8 | | | | | | 13.2 | 13.2 | 13.2 | |
| Total Split (s) | | 50.0 | 50.0 | | | | | | 70.0 | 70.0 | 70.0 | |
| Total Split (%) | | 41.7% | 41.7% | | | | | | 58.3% | 58.3% | 58.3% | |
| Maximum Green (s) | | 43.2 | 43.2 | | | | | | 63.8 | 63.8 | 63.8 | |
| Yellow Time (s) | | 5.4 | 5.4 | | | | | | 3.0 | 3.0 | 3.0 | |
| All-Red Time (s) | | 1.4 | 1.4 | | | | | | 3.2 | 3.2 | 3.2 | |
| Lost Time Adjust (s) | | -1.8 | -1.8 | | | | | | -1.2 | | -1.2 | |
| Total Lost Time (s) | | 5.0 | 5.0 | | | | | | 5.0 | | 5.0 | |
| Lead/Lag | | | | | | | | | | | | |
| Lead-Lag Optimize? | | | | | | | | | | | | |
| Vehicle Extension (s) | | 6.0 | 6.0 | | | | | | 2.0 | 2.0 | 2.0 | |
| Minimum Gap (s) | | 3.4 | 3.4 | | | | | | 0.2 | 0.2 | 0.2 | |
| Time Before Reduce (s) | | 15.0 | 15.0 | | | | | | 0.0 | 0.0 | 0.0 | |
| Time To Reduce (s) | | 45.0 | 45.0 | | | | | | 0.0 | 0.0 | 0.0 | |
| Recall Mode | | C-Min | C-Min | | | | | | None | None | None | |
| Act Effct Green (s) | | 45.0 | 45.0 | | | | | | 65.0 | | 65.0 | |
| Actuated g/C Ratio | | 0.38 | 0.38 | | | | | | 0.54 | | 0.54 | |
| v/c Ratio | | 0.97 | 0.72 | | | | | | 0.98 | | 0.56 | |
| Control Delay | | 55.0 | 40.2 | | | | | | 47.4 | | 19.6 | |
| Queue Delay | | 0.0 | 0.0 | | | | | | 0.0 | | 0.0 | |

| Lane Group | EBL | EBT | EBR | WBL | WBT | WBR | NBL | NBT | NBR | SBL | SBT | SBR |
|---|---|---|---|---|---|---|---|---|---|---|---|---|
| Total Delay | | 55.0 | 40.2 | | | | | | 47.4 | | 19.6 | |
| LOS | | E | D | | | | | | D | | B | |
| Approach Delay | | 51.3 | | | | | | 47.4 | | | 19.6 | |
| Approach LOS | | D | | | | | | D | | | B | |
| Queue Length 50th (ft) | | 512 | 283 | | | | | | 613 | | 278 | |
| Queue Length 95th (ft) | | #668 | 408 | | | | | | #817 | | 341 | |
| Internal Link Dist (ft) | | 2986 | | | 409 | | | 898 | | | 374 | |
| Turn Bay Length (ft) | | | 175 | | | | | | | | | |
| Base Capacity (vph) | | 1340 | 599 | | | | | | 1502 | | 1916 | |
| Starvation Cap Reductn | | 0 | 0 | | | | | | 0 | | 0 | |
| Spillback Cap Reductn | | 0 | 0 | | | | | | 0 | | 0 | |
| Storage Cap Reductn | | 0 | 0 | | | | | | 0 | | 0 | |
| Reduced v/c Ratio | | 0.97 | 0.72 | | | | | | 0.98 | | 0.56 | |

| Intersection Summary | | | |
|---|---|---|---|
| Area Type: | Other | | |
| Cycle Length: 120 | | | |
| Actuated Cycle Length: 120 | | | |
| Offset: 0 (0%), Referenced to phase 2:EBT, Start of Green | | | |
| Natural Cycle: 100 | | | |
| Control Type: Actuated-Coordinated | | | |
| Maximum v/c Ratio: 0.98 | | | |
| Intersection Signal Delay: 42.0 | | Intersection LOS: D | |
| Intersection Capacity Utilization 129.6% | | ICU Level of Service H | |
| Analysis Period (min) 15 | | | |
| # 95th percentile volume exceeds capacity, queue may be longer. | | | |
| Queue shown is maximum after two cycles. | | | |

Splits and Phases: 4: Richardson Rd & US 64 EB

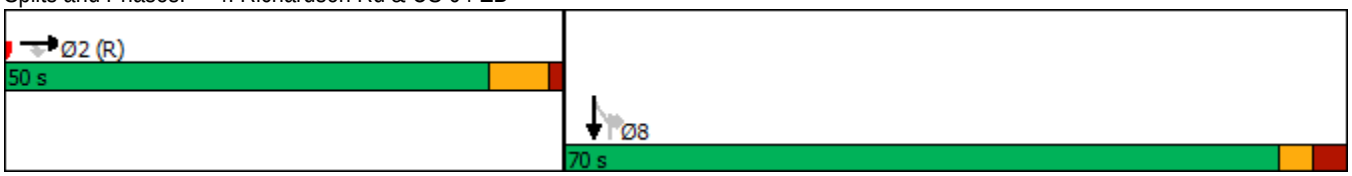



| Lane Group | EBT | EBR | WBL | WBT | NBL | NBR |
|---|---|---|---|---|---|---|
| Lane Configurations | | | | | | |
| Traffic Volume (vph) | 0 | 0 | 0 | 2166 | 472 | 0 |
| Future Volume (vph) | 0 | 0 | 0 | 2166 | 472 | 0 |
| Ideal Flow (vphpl) | 1900 | 1900 | 1900 | 1900 | 1900 | 1900 |
| Lane Util. Factor | 1.00 | 1.00 | 1.00 | 0.95 | 0.97 | 1.00 |
| Frt | | | | | | |
| Flt Protected | | | | | 0.950 | |
| Satd. Flow (prot) | 0 | 0 | 0 | 3539 | 3433 | 0 |
| Flt Permitted | | | | | 0.950 | |
| Satd. Flow (perm) | 0 | 0 | 0 | 3539 | 3433 | 0 |
| Right Turn on Red | | No | | | No | No |
| Satd. Flow (RTOR) | | | | | | |
| Link Speed (mph) | 55 | | | 55 | 25 | |
| Link Distance (ft) | 459 | | | 2512 | 426 | |
| Travel Time (s) | 5.7 | | | 31.1 | 11.6 | |
| Peak Hour Factor | 0.90 | 0.90 | 0.90 | 0.90 | 0.90 | 0.90 |
| Adj. Flow (vph) | 0 | 0 | 0 | 2407 | 524 | 0 |
| Shared Lane Traffic (%) | | | | | | |
| Lane Group Flow (vph) | 0 | 0 | 0 | 2407 | 524 | 0 |
| Turn Type | | | | NA | Prot | |
| Protected Phases | | | | 6 | 8 | |
| Permitted Phases | | | | | | |
| Detector Phase | | | | 6 | 8 | |
| Switch Phase | | | | | | |
| Minimum Initial (s) | | | | 14.0 | 7.0 | |
| Minimum Split (s) | | | | 20.2 | 13.3 | |
| Total Split (s) | | | | 70.0 | 20.0 | |
| Total Split (%) | | | | 77.8% | 22.2% | |
| Maximum Green (s) | | | | 63.8 | 13.7 | |
| Yellow Time (s) | | | | 5.2 | 3.0 | |
| All-Red Time (s) | | | | 1.0 | 3.3 | |
| Lost Time Adjust (s) | | | | -1.2 | -1.3 | |
| Total Lost Time (s) | | | | 5.0 | 5.0 | |
| Lead/Lag | | | | | | |
| Lead-Lag Optimize? | | | | | | |
| Vehicle Extension (s) | | | | 6.0 | 2.0 | |
| Minimum Gap (s) | | | | 3.4 | 0.2 | |
| Time Before Reduce (s) | | | | 15.0 | 0.0 | |
| Time To Reduce (s) | | | | 45.0 | 0.0 | |
| Recall Mode | | | | C-Min | None | |
| Act Effct Green (s) | | | | 65.0 | 15.0 | |
| Actuated g/C Ratio | | | | 0.72 | 0.17 | |
| v/c Ratio | | | | 0.94 | 0.92 | |
| Control Delay | | | | 20.5 | 59.9 | |
| Queue Delay | | | | 0.0 | 0.0 | |
| Total Delay | | | | 20.5 | 59.9 | |
| LOS | | | | C | E | |
| Approach Delay | | | | 20.5 | 59.9 | |
| Approach LOS | | | | C | E | |

| Lane Group | EBT | EBR | WBL | WBT | NBL | NBR |
|---|---|---|---|---|---|---|
| Queue Length 50th (ft) | | | | 523 | 152 | |
| Queue Length 95th (ft) | | | | #847 | #246 | |
| Internal Link Dist (ft) | 379 | | | 2432 | 346 | |
| Turn Bay Length (ft) | | | | | | |
| Base Capacity (vph) | | | | 2555 | 572 | |
| Starvation Cap Reductn | | | | 0 | 0 | |
| Spillback Cap Reductn | | | | 0 | 0 | |
| Storage Cap Reductn | | | | 0 | 0 | |
| Reduced v/c Ratio | | | | 0.94 | 0.92 | |

| Intersection Summary | | | |
|---|---|---|---|
| Area Type: | Other | | |
| Cycle Length: 90 | | | |
| Actuated Cycle Length: 90 | | | |
| Offset: 0 (0%), Referenced to phase 6:WBT, Start of Green | | | |
| Natural Cycle: 90 | | | |
| Control Type: Actuated-Coordinated | | | |
| Maximum v/c Ratio: 0.94 | | | |
| Intersection Signal Delay: 27.6 | | Intersection LOS: C | |
| Intersection Capacity Utilization 81.7% | | ICU Level of Service D | |
| Analysis Period (min) 15 | | | |

\# 95th percentile volume exceeds capacity, queue may be longer.
Queue shown is maximum after two cycles.

Splits and Phases: 5: U-Turn East & US 64 WB



| Lane Group | EBL | EBT | EBR | WBL | WBT | WBR | NBL | NBT | NBR | SBL | SBT | SBR |
|---|---|---|---|---|---|---|---|---|---|---|---|---|
| Lane Configurations | | | | | | | | | | | | |
| Traffic Volume (vph) | 54 | 70 | 22 | 101 | 70 | 120 | 37 | 110 | 131 | 93 | 102 | 48 |
| Future Volume (vph) | 54 | 70 | 22 | 101 | 70 | 120 | 37 | 110 | 131 | 93 | 102 | 48 |
| Ideal Flow (vphpl) | 1900 | 1900 | 1900 | 1900 | 1900 | 1900 | 1900 | 1900 | 1900 | 1900 | 1900 | 1900 |
| Storage Length (ft) | 250 | | 0 | 150 | | 150 | 100 | | 0 | 150 | | 175 |
| Storage Lanes | 1 | | 0 | 1 | | 1 | 1 | | 0 | 1 | | 1 |
| Taper Length (ft) | 100 | | | 100 | | | 100 | | | 100 | | |
| Lane Util. Factor | 1.00 | 1.00 | 1.00 | 1.00 | 1.00 | 1.00 | 1.00 | 1.00 | 1.00 | 1.00 | 1.00 | 1.00 |
| Frt | | 0.965 | | | | 0.850 | | 0.918 | | | | 0.850 |
| Flt Protected | 0.950 | | | 0.950 | | | 0.950 | | | 0.950 | | |
| Satd. Flow (prot) | 1770 | 1798 | 0 | 1770 | 1863 | 1583 | 1770 | 1710 | 0 | 1770 | 1863 | 1583 |
| Flt Permitted | 0.706 | | | 0.691 | | | 0.684 | | | 0.594 | | |
| Satd. Flow (perm) | 1315 | 1798 | 0 | 1287 | 1863 | 1583 | 1274 | 1710 | 0 | 1106 | 1863 | 1583 |
| Right Turn on Red | | | No | | | No | | | No | | | No |
| Satd. Flow (RTOR) | | | | | | | | | | | | |
| Link Speed (mph) | | 45 | | | 45 | | | 45 | | | 45 | |
| Link Distance (ft) | | 1889 | | | 1311 | | | 1771 | | | 2925 | |
| Travel Time (s) | | 28.6 | | | 19.9 | | | 26.8 | | | 44.3 | |
| Peak Hour Factor | 0.90 | 0.90 | 0.90 | 0.90 | 0.90 | 0.90 | 0.90 | 0.90 | 0.90 | 0.90 | 0.90 | 0.90 |
| Adj. Flow (vph) | 60 | 78 | 24 | 112 | 78 | 133 | 41 | 122 | 146 | 103 | 113 | 53 |
| Shared Lane Traffic (%) | | | | | | | | | | | | |
| Lane Group Flow (vph) | 60 | 102 | 0 | 112 | 78 | 133 | 41 | 268 | 0 | 103 | 113 | 53 |
| Turn Type | Perm | NA | | Perm | NA | Perm | Perm | NA | | Perm | NA | Perm |
| Protected Phases | | 2 | | | 6 | | | 4 | | | 8 | |
| Permitted Phases | 2 | | | 6 | | 6 | 4 | | | 8 | | 8 |
| Detector Phase | 2 | 2 | | 6 | 6 | 6 | 4 | 4 | | 8 | 8 | 8 |
| Switch Phase | | | | | | | | | | | | |
| Minimum Initial (s) | 7.0 | 7.0 | | 7.0 | 7.0 | 7.0 | 7.0 | 7.0 | | 7.0 | 7.0 | 7.0 |
| Minimum Split (s) | 14.0 | 14.0 | | 14.0 | 14.0 | 14.0 | 14.0 | 14.0 | | 14.0 | 14.0 | 14.0 |
| Total Split (s) | 26.0 | 26.0 | | 26.0 | 26.0 | 26.0 | 34.0 | 34.0 | | 34.0 | 34.0 | 34.0 |
| Total Split (%) | 43.3% | 43.3% | | 43.3% | 43.3% | 43.3% | 56.7% | 56.7% | | 56.7% | 56.7% | 56.7% |
| Maximum Green (s) | 19.0 | 19.0 | | 19.0 | 19.0 | 19.0 | 27.0 | 27.0 | | 27.0 | 27.0 | 27.0 |
| Yellow Time (s) | 5.0 | 5.0 | | 5.0 | 5.0 | 5.0 | 5.0 | 5.0 | | 5.0 | 5.0 | 5.0 |
| All-Red Time (s) | 2.0 | 2.0 | | 2.0 | 2.0 | 2.0 | 2.0 | 2.0 | | 2.0 | 2.0 | 2.0 |
| Lost Time Adjust (s) | -2.0 | -2.0 | | -2.0 | -2.0 | -2.0 | -2.0 | -2.0 | | -2.0 | -2.0 | -2.0 |
| Total Lost Time (s) | 5.0 | 5.0 | | 5.0 | 5.0 | 5.0 | 5.0 | 5.0 | | 5.0 | 5.0 | 5.0 |
| Lead/Lag | | | | | | | | | | | | |
| Lead-Lag Optimize? | | | | | | | | | | | | |
| Vehicle Extension (s) | 3.0 | 3.0 | | 3.0 | 3.0 | 3.0 | 3.0 | 3.0 | | 3.0 | 3.0 | 3.0 |
| Recall Mode | Min | Min | | Min | Min | Min | None | None | | None | None | None |
| Act Effct Green (s) | 12.2 | 12.2 | | 12.2 | 12.2 | 12.2 | 12.8 | 12.8 | | 12.8 | 12.8 | 12.8 |
| Actuated g/C Ratio | 0.35 | 0.35 | | 0.35 | 0.35 | 0.35 | 0.36 | 0.36 | | 0.36 | 0.36 | 0.36 |
| v/c Ratio | 0.13 | 0.16 | | 0.25 | 0.12 | 0.24 | 0.09 | 0.43 | | 0.26 | 0.17 | 0.09 |
| Control Delay | 9.9 | 9.8 | | 11.1 | 9.5 | 10.6 | 7.8 | 10.7 | | 9.5 | 8.0 | 7.6 |
| Queue Delay | 0.0 | 0.0 | | 0.0 | 0.0 | 0.0 | 0.0 | 0.0 | | 0.0 | 0.0 | 0.0 |
| Total Delay | 9.9 | 9.8 | | 11.1 | 9.5 | 10.6 | 7.8 | 10.7 | | 9.5 | 8.0 | 7.6 |
| LOS | A | A | | B | A | B | A | B | | A | A | A |
| Approach Delay | | 9.8 | | | 10.5 | | | 10.3 | | | 8.5 | |
| Approach LOS | | A | | | B | | | B | | | A | |

| Lane Group | EBL | EBT | EBR | WBL | WBT | WBR | NBL | NBT | NBR | SBL | SBT | SBR |
|---|---|---|---|---|---|---|---|---|---|---|---|---|
| Queue Length 50th (ft) | 7 | 12 | | 14 | 9 | 17 | 4 | 31 | | 11 | 12 | 5 |
| Queue Length 95th (ft) | 28 | 40 | | 46 | 32 | 52 | 18 | 85 | | 39 | 38 | 22 |
| Internal Link Dist (ft) | | 1809 | | | 1231 | | | 1691 | | | 2845 | |
| Turn Bay Length (ft) | 250 | | | 150 | | 150 | 100 | | | 150 | | 175 |
| Base Capacity (vph) | 796 | 1088 | | 779 | 1128 | 958 | 1065 | 1430 | | 924 | 1558 | 1323 |
| Starvation Cap Reductn | 0 | 0 | | 0 | 0 | 0 | 0 | 0 | | 0 | 0 | 0 |
| Spillback Cap Reductn | 0 | 0 | | 0 | 0 | 0 | 0 | 0 | | 0 | 0 | 0 |
| Storage Cap Reductn | 0 | 0 | | 0 | 0 | 0 | 0 | 0 | | 0 | 0 | 0 |
| Reduced v/c Ratio | 0.08 | 0.09 | | 0.14 | 0.07 | 0.14 | 0.04 | 0.19 | | 0.11 | 0.07 | 0.04 |

| Intersection Summary | | | |
|---|---|---|---|
| Area Type: | Other | | |
| Cycle Length: 60 | | | |
| Actuated Cycle Length: 35.2 | | | |
| Natural Cycle: 40 | | | |
| Control Type: Actuated-Uncoordinated | | | |
| Maximum v/c Ratio: 0.43 | | | |
| Intersection Signal Delay: 9.8 | | Intersection LOS: A | |
| Intersection Capacity Utilization 44.4% | | ICU Level of Service A | |
| Analysis Period (min) 15 | | | |

Splits and Phases: 1: Richardson Rd & Olive Chapel Rd

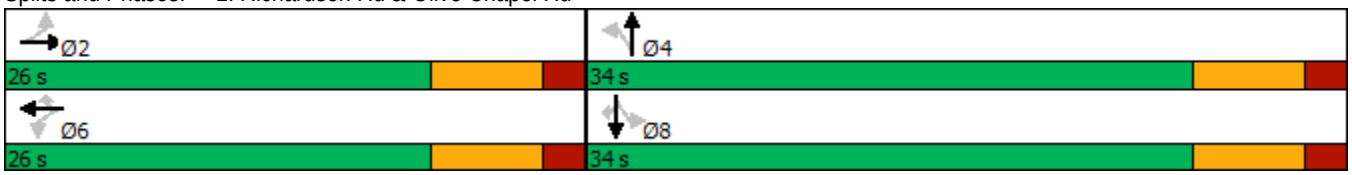

| Intersection | |
|---|---|
| Int Delay, s/veh | 2.9 |

| Movement | EBT | EBR | WBL | WBT | NBL | NBR |
|---|---|---|---|---|---|---|
| Lane Configurations | | | | | | |
| Traffic Vol, veh/h | 446 | 22 | 83 | 336 | 28 | 97 |
| Future Vol, veh/h | 446 | 22 | 83 | 336 | 28 | 97 |
| Conflicting Peds, #/hr | 0 | 0 | 0 | 0 | 0 | 0 |
| Sign Control | Free | Free | Free | Free | Stop | Stop |
| RT Channelized | - | None | - | None | - | None |
| Storage Length | - | - | - | - | 0 | - |
| Veh in Median Storage, # | 0 | - | - | 0 | 0 | - |
| Grade, % | 0 | - | - | 0 | 0 | - |
| Peak Hour Factor | 90 | 90 | 90 | 90 | 90 | 90 |
| Heavy Vehicles, % | 2 | 2 | 2 | 2 | 2 | 2 |
| Mvmt Flow | 496 | 24 | 92 | 373 | 31 | 108 |

| Major/Minor | Major1 | | Major2 | | Minor1 | |
|---|---|---|---|---|---|---|
| Conflicting Flow All | 0 | 0 | 520 | 0 | 1065 | 508 |
| Stage 1 | - | - | - | - | 508 | - |
| Stage 2 | - | - | - | - | 557 | - |
| Critical Hdwy | - | - | 4.12 | - | 6.42 | 6.22 |
| Critical Hdwy Stg 1 | - | - | - | - | 5.42 | - |
| Critical Hdwy Stg 2 | - | - | - | - | 5.42 | - |
| Follow-up Hdwy | - | - | 2.218 | - | 3.518 | 3.318 |
| Pot Cap-1 Maneuver | - | - | 1046 | - | 246 | 565 |
| Stage 1 | - | - | - | - | 604 | - |
| Stage 2 | - | - | - | - | 574 | - |
| Platoon blocked, % | - | - | | - | | |
| Mov Cap-1 Maneuver | - | - | 1046 | - | 219 | 565 |
| Mov Cap-2 Maneuver | - | - | - | - | 219 | - |
| Stage 1 | - | - | - | - | 604 | - |
| Stage 2 | - | - | - | - | 510 | - |

| Approach | EB | WB | NB |
|---|---|---|---|
| HCM Control Delay, s | 0 | 1.7 | 17.9 |
| HCM LOS | | | C |

| Minor Lane/Major Mvmt | NBLn1 | EBT | EBR | WBL | WBT |
|---|---|---|---|---|---|
| Capacity (veh/h) | 417 | - | - | 1046 | - |
| HCM Lane V/C Ratio | 0.333 | - | - | 0.088 | - |
| HCM Control Delay (s) | 17.9 | - | - | 8.8 | 0 |
| HCM Lane LOS | C | - | - | A | A |
| HCM 95th %tile Q(veh) | 1.4 | - | - | 0.3 | - |

| Intersection | |
|---|---|
| Int Delay, s/veh | 3 |

| Movement | EBL | EBT | EBR | WBL | WBT | WBR | NBL | NBT | NBR | SBL | SBT | SBR |
|---|---|---|---|---|---|---|---|---|---|---|---|---|
| Lane Configurations | | ↕ | | | ↕ | | ↰ | ↑ | | ↰ | ↑ | |
| Traffic Vol, veh/h | 1 | 0 | 1 | 15 | 0 | 167 | 2 | 478 | 10 | 67 | 503 | 1 |
| Future Vol, veh/h | 1 | 0 | 1 | 15 | 0 | 167 | 2 | 478 | 10 | 67 | 503 | 1 |
| Conflicting Peds, #/hr | 0 | 0 | 0 | 0 | 0 | 0 | 0 | 0 | 0 | 0 | 0 | 0 |
| Sign Control | Stop | Stop | Stop | Stop | Stop | Stop | Free | Free | Free | Free | Free | Free |
| RT Channelized | - | - | None | - | - | None | - | - | None | - | - | None |
| Storage Length | - | - | - | - | - | - | 125 | - | - | 150 | - | - |
| Veh in Median Storage, # | - | 1 | - | - | 1 | - | - | 0 | - | - | 0 | - |
| Grade, % | - | 0 | - | - | 0 | - | - | 0 | - | - | 0 | - |
| Peak Hour Factor | 90 | 90 | 90 | 90 | 90 | 90 | 90 | 90 | 90 | 90 | 90 | 90 |
| Heavy Vehicles, % | 2 | 2 | 2 | 2 | 2 | 2 | 2 | 2 | 2 | 2 | 2 | 2 |
| Mvmt Flow | 1 | 0 | 1 | 17 | 0 | 186 | 2 | 531 | 11 | 74 | 559 | 1 |

| Major/Minor | Minor2 | | | Minor1 | | | Major1 | | | Major2 | | |
|---|---|---|---|---|---|---|---|---|---|---|---|---|
| Conflicting Flow All | 1342 | 1254 | 560 | 1249 | 1249 | 537 | 560 | 0 | 0 | 542 | 0 | 0 |
| Stage 1 | 708 | 708 | - | 541 | 541 | - | - | - | - | - | - | - |
| Stage 2 | 634 | 546 | - | 708 | 708 | - | - | - | - | - | - | - |
| Critical Hdwy | 7.12 | 6.52 | 6.22 | 7.12 | 6.52 | 6.22 | 4.12 | - | - | 4.12 | - | - |
| Critical Hdwy Stg 1 | 6.12 | 5.52 | - | 6.12 | 5.52 | - | - | - | - | - | - | - |
| Critical Hdwy Stg 2 | 6.12 | 5.52 | - | 6.12 | 5.52 | - | - | - | - | - | - | - |
| Follow-up Hdwy | 3.518 | 4.018 | 3.318 | 3.518 | 4.018 | 3.318 | 2.218 | - | - | 2.218 | - | - |
| Pot Cap-1 Maneuver | 129 | 172 | 528 | 150 | 173 | 544 | 1011 | - | - | 1027 | - | - |
| Stage 1 | 426 | 438 | - | 525 | 521 | - | - | - | - | - | - | - |
| Stage 2 | 467 | 518 | - | 426 | 438 | - | - | - | - | - | - | - |
| Platoon blocked, % | | | | | | | | - | - | | - | - |
| Mov Cap-1 Maneuver | 80 | 159 | 528 | 141 | 160 | 544 | 1011 | - | - | 1027 | - | - |
| Mov Cap-2 Maneuver | 170 | 266 | - | 267 | 279 | - | - | - | - | - | - | - |
| Stage 1 | 425 | 406 | - | 524 | 520 | - | - | - | - | - | - | - |
| Stage 2 | 307 | 517 | - | 394 | 406 | - | - | - | - | - | - | - |

| Approach | EB | WB | NB | SB |
|---|---|---|---|---|
| HCM Control Delay, s | 19.1 | 17 | 0 | 1 |
| HCM LOS | C | C | | |

| Minor Lane/Major Mvmt | NBL | NBT | NBR | EBLn1 | WBLn1 | SBL | SBT | SBR |
|---|---|---|---|---|---|---|---|---|
| Capacity (veh/h) | 1011 | - | - | 257 | 501 | 1027 | - | - |
| HCM Lane V/C Ratio | 0.002 | - | - | 0.009 | 0.404 | 0.072 | - | - |
| HCM Control Delay (s) | 8.6 | - | - | 19.1 | 17 | 8.8 | - | - |
| HCM Lane LOS | A | - | - | C | C | A | - | - |
| HCM 95th %tile Q(veh) | 0 | - | - | 0 | 1.9 | 0.2 | - | - |

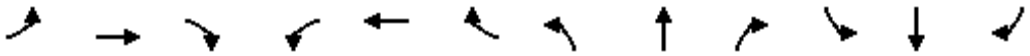

| Lane Group | EBL | EBT | EBR | WBL | WBT | WBR | NBL | NBT | NBR | SBL | SBT | SBR |
|---|---|---|---|---|---|---|---|---|---|---|---|---|
| Lane Configurations | | | | | | | | | | | | |
| Traffic Volume (vph) | 0 | 1124 | 270 | 0 | 0 | 0 | 0 | 0 | 979 | 0 | 735 | 0 |
| Future Volume (vph) | 0 | 1124 | 270 | 0 | 0 | 0 | 0 | 0 | 979 | 0 | 735 | 0 |
| Ideal Flow (vphpl) | 1900 | 1900 | 1900 | 1900 | 1900 | 1900 | 1900 | 1900 | 1900 | 1900 | 1900 | 1900 |
| Grade (%) | | -2% | | | 0% | | | 1% | | | 0% | |
| Storage Length (ft) | 0 | | 175 | 0 | | 0 | 0 | | 0 | 0 | | 0 |
| Storage Lanes | 0 | | 1 | 0 | | 0 | 0 | | 2 | 0 | | 0 |
| Taper Length (ft) | 100 | | | 100 | | | 100 | | | 100 | | |
| Lane Util. Factor | 1.00 | 0.95 | 1.00 | 1.00 | 1.00 | 1.00 | 1.00 | 1.00 | 0.88 | 0.95 | 0.95 | 1.00 |
| Frt | | | 0.850 | | | | | | 0.850 | | | |
| Flt Protected | | | | | | | | | | | | |
| Satd. Flow (prot) | 0 | 3575 | 1599 | 0 | 0 | 0 | 0 | 0 | 2773 | 0 | 3539 | 0 |
| Flt Permitted | | | | | | | | | | | | |
| Satd. Flow (perm) | 0 | 3575 | 1599 | 0 | 0 | 0 | 0 | 0 | 2773 | 0 | 3539 | 0 |
| Right Turn on Red | | | No | | | No | | | No | No | | No |
| Satd. Flow (RTOR) | | | | | | | | | | | | |
| Link Speed (mph) | | 55 | | | 55 | | | 45 | | | 35 | |
| Link Distance (ft) | | 3066 | | | 489 | | | 978 | | | 454 | |
| Travel Time (s) | | 38.0 | | | 6.1 | | | 14.8 | | | 8.8 | |
| Peak Hour Factor | 0.90 | 0.90 | 0.90 | 0.90 | 0.90 | 0.90 | 0.90 | 0.90 | 0.90 | 0.90 | 0.90 | 0.90 |
| Adj. Flow (vph) | 0 | 1249 | 300 | 0 | 0 | 0 | 0 | 0 | 1088 | 0 | 817 | 0 |
| Shared Lane Traffic (%) | | | | | | | | | | | | |
| Lane Group Flow (vph) | 0 | 1249 | 300 | 0 | 0 | 0 | 0 | 0 | 1088 | 0 | 817 | 0 |
| Turn Type | | NA | Perm | | | | | | Perm | | NA | |
| Protected Phases | | 2 | | | | | | | | | 8 | |
| Permitted Phases | | | 2 | | | | | | 8 | 8 | | |
| Detector Phase | | 2 | 2 | | | | | | 8 | 8 | 8 | |
| Switch Phase | | | | | | | | | | | | |
| Minimum Initial (s) | | 14.0 | 14.0 | | | | | | 7.0 | 7.0 | 7.0 | |
| Minimum Split (s) | | 20.8 | 20.8 | | | | | | 13.2 | 13.2 | 13.2 | |
| Total Split (s) | | 29.0 | 29.0 | | | | | | 31.0 | 31.0 | 31.0 | |
| Total Split (%) | | 48.3% | 48.3% | | | | | | 51.7% | 51.7% | 51.7% | |
| Maximum Green (s) | | 22.2 | 22.2 | | | | | | 24.8 | 24.8 | 24.8 | |
| Yellow Time (s) | | 5.4 | 5.4 | | | | | | 3.0 | 3.0 | 3.0 | |
| All-Red Time (s) | | 1.4 | 1.4 | | | | | | 3.2 | 3.2 | 3.2 | |
| Lost Time Adjust (s) | | -1.8 | -1.8 | | | | | | -1.3 | | -1.2 | |
| Total Lost Time (s) | | 5.0 | 5.0 | | | | | | 4.9 | | 5.0 | |
| Lead/Lag | | | | | | | | | | | | |
| Lead-Lag Optimize? | | | | | | | | | | | | |
| Vehicle Extension (s) | | 6.0 | 6.0 | | | | | | 2.0 | 2.0 | 2.0 | |
| Minimum Gap (s) | | 3.4 | 3.4 | | | | | | 0.2 | 0.2 | 0.2 | |
| Time Before Reduce (s) | | 15.0 | 15.0 | | | | | | 0.0 | 0.0 | 0.0 | |
| Time To Reduce (s) | | 45.0 | 45.0 | | | | | | 0.0 | 0.0 | 0.0 | |
| Recall Mode | | C-Min | C-Min | | | | | | None | None | None | |
| Act Effct Green (s) | | 24.0 | 24.0 | | | | | | 26.1 | | 26.0 | |
| Actuated g/C Ratio | | 0.40 | 0.40 | | | | | | 0.44 | | 0.43 | |
| v/c Ratio | | 0.87 | 0.47 | | | | | | 0.90 | | 0.53 | |
| Control Delay | | 25.5 | 16.3 | | | | | | 28.5 | | 9.8 | |
| Queue Delay | | 0.0 | 0.0 | | | | | | 0.0 | | 0.0 | |

| Lane Group | EBL | EBT | EBR | WBL | WBT | WBR | NBL | NBT | NBR | SBL | SBT | SBR |
|---|---|---|---|---|---|---|---|---|---|---|---|---|
| Total Delay | | 25.5 | 16.3 | | | | | | 28.5 | | 9.8 | |
| LOS | | C | B | | | | | | C | | A | |
| Approach Delay | | 23.7 | | | | | | 28.5 | | | 9.8 | |
| Approach LOS | | C | | | | | | C | | | A | |
| Queue Length 50th (ft) | | 210 | 77 | | | | | | 197 | | 99 | |
| Queue Length 95th (ft) | | #333 | 138 | | | | | | #333 | | m110 | |
| Internal Link Dist (ft) | | 2986 | | | 409 | | | 898 | | | 374 | |
| Turn Bay Length (ft) | | | 175 | | | | | | | | | |
| Base Capacity (vph) | | 1430 | 639 | | | | | | 1206 | | 1533 | |
| Starvation Cap Reductn | | 0 | 0 | | | | | | 0 | | 0 | |
| Spillback Cap Reductn | | 0 | 0 | | | | | | 0 | | 0 | |
| Storage Cap Reductn | | 0 | 0 | | | | | | 0 | | 0 | |
| Reduced v/c Ratio | | 0.87 | 0.47 | | | | | | 0.90 | | 0.53 | |

| Intersection Summary | | | |
|---|---|---|---|
| Area Type: | Other | | |
| Cycle Length: 60 | | | |
| Actuated Cycle Length: 60 | | | |
| Offset: 0 (0%), Referenced to phase 2:EBT, Start of Green | | | |
| Natural Cycle: 60 | | | |
| Control Type: Actuated-Coordinated | | | |
| Maximum v/c Ratio: 0.90 | | | |
| Intersection Signal Delay: 22.0 | | Intersection LOS: C | |
| Intersection Capacity Utilization 103.0% | | ICU Level of Service G | |
| Analysis Period (min) 15 | | | |
| # 95th percentile volume exceeds capacity, queue may be longer. | | | |
| Queue shown is maximum after two cycles. | | | |
| m Volume for 95th percentile queue is metered by upstream signal. | | | |

Splits and Phases: 4: Richardson Rd & US 64 EB

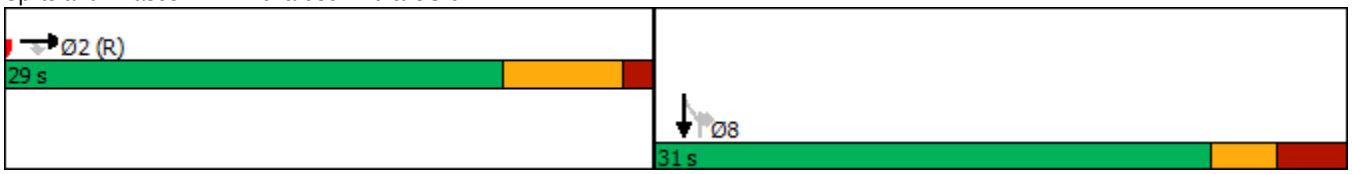



| Lane Group | EBT | EBR | WBL | WBT | NBL | NBR |
|---|---|---|---|---|---|---|
| Lane Configurations | | | | | | |
| Traffic Volume (vph) | 0 | 0 | 0 | 1786 | 258 | 0 |
| Future Volume (vph) | 0 | 0 | 0 | 1786 | 258 | 0 |
| Ideal Flow (vphpl) | 1900 | 1900 | 1900 | 1900 | 1900 | 1900 |
| Lane Util. Factor | 1.00 | 1.00 | 1.00 | 0.95 | 0.97 | 1.00 |
| Frt | | | | | | |
| Flt Protected | | | | | 0.950 | |
| Satd. Flow (prot) | 0 | 0 | 0 | 3539 | 3433 | 0 |
| Flt Permitted | | | | | 0.950 | |
| Satd. Flow (perm) | 0 | 0 | 0 | 3539 | 3433 | 0 |
| Right Turn on Red | | No | | | No | No |
| Satd. Flow (RTOR) | | | | | | |
| Link Speed (mph) | 55 | | | 55 | 25 | |
| Link Distance (ft) | 459 | | | 2512 | 426 | |
| Travel Time (s) | 5.7 | | | 31.1 | 11.6 | |
| Peak Hour Factor | 0.90 | 0.90 | 0.90 | 0.90 | 0.90 | 0.90 |
| Adj. Flow (vph) | 0 | 0 | 0 | 1984 | 287 | 0 |
| Shared Lane Traffic (%) | | | | | | |
| Lane Group Flow (vph) | 0 | 0 | 0 | 1984 | 287 | 0 |
| Turn Type | | | | NA | Prot | |
| Protected Phases | | | | 6 | 8 | |
| Permitted Phases | | | | | | |
| Detector Phase | | | | 6 | 8 | |
| Switch Phase | | | | | | |
| Minimum Initial (s) | | | | 14.0 | 7.0 | |
| Minimum Split (s) | | | | 21.2 | 14.0 | |
| Total Split (s) | | | | 46.0 | 14.0 | |
| Total Split (%) | | | | 76.7% | 23.3% | |
| Maximum Green (s) | | | | 39.8 | 7.7 | |
| Yellow Time (s) | | | | 5.2 | 3.0 | |
| All-Red Time (s) | | | | 1.0 | 3.3 | |
| Lost Time Adjust (s) | | | | -1.2 | -1.3 | |
| Total Lost Time (s) | | | | 5.0 | 5.0 | |
| Lead/Lag | | | | | | |
| Lead-Lag Optimize? | | | | | | |
| Vehicle Extension (s) | | | | 6.0 | 2.0 | |
| Minimum Gap (s) | | | | 3.4 | 0.2 | |
| Time Before Reduce (s) | | | | 15.0 | 0.0 | |
| Time To Reduce (s) | | | | 45.0 | 0.0 | |
| Recall Mode | | | | C-Min | None | |
| Act Effct Green (s) | | | | 41.1 | 8.9 | |
| Actuated g/C Ratio | | | | 0.68 | 0.15 | |
| v/c Ratio | | | | 0.82 | 0.57 | |
| Control Delay | | | | 10.5 | 26.5 | |
| Queue Delay | | | | 0.0 | 0.0 | |
| Total Delay | | | | 10.5 | 26.5 | |
| LOS | | | | B | C | |
| Approach Delay | | | | 10.5 | 26.5 | |
| Approach LOS | | | | B | C | |

| Lane Group | EBT | EBR | WBL | WBT | NBL | NBR |
|---|---|---|---|---|---|---|
| Queue Length 50th (ft) | | | | 215 | 51 | |
| Queue Length 95th (ft) | | | | 312 | m59 | |
| Internal Link Dist (ft) | 379 | | | 2432 | 346 | |
| Turn Bay Length (ft) | | | | | | |
| Base Capacity (vph) | | | | 2426 | 514 | |
| Starvation Cap Reductn | | | | 0 | 0 | |
| Spillback Cap Reductn | | | | 0 | 0 | |
| Storage Cap Reductn | | | | 0 | 0 | |
| Reduced v/c Ratio | | | | 0.82 | 0.56 | |

| Intersection Summary | | | |
|---|---|---|---|
| Area Type: | Other | | |
| Cycle Length: 60 | | | |
| Actuated Cycle Length: 60 | | | |
| Offset: 0 (0%), Referenced to phase 6:WBT, Start of Green | | | |
| Natural Cycle: 60 | | | |
| Control Type: Actuated-Coordinated | | | |
| Maximum v/c Ratio: 0.82 | | | |
| Intersection Signal Delay: 12.5 | | Intersection LOS: B | |
| Intersection Capacity Utilization 65.1% | | ICU Level of Service C | |
| Analysis Period (min) 15 | | | |
| m Volume for 95th percentile queue is metered by upstream signal. | | | |

Splits and Phases: 5: U-Turn East & US 64 WB



| Intersection | |
|---|---|
| Int Delay, s/veh | 0.8 |

| Movement | EBL | EBT | WBT | WBR | SBL | SBR |
|---|---|---|---|---|---|---|
| Lane Configurations | | | | | | |
| Traffic Vol, veh/h | 5 | 439 | 355 | 9 | 29 | 13 |
| Future Vol, veh/h | 5 | 439 | 355 | 9 | 29 | 13 |
| Conflicting Peds, #/hr | 0 | 0 | 0 | 0 | 0 | 0 |
| Sign Control | Free | Free | Free | Free | Stop | Stop |
| RT Channelized | - | None | - | None | - | None |
| Storage Length | 100 | - | - | 100 | 0 | - |
| Veh in Median Storage, # | - | 0 | 0 | - | 0 | - |
| Grade, % | - | 0 | 0 | - | 0 | - |
| Peak Hour Factor | 90 | 90 | 90 | 90 | 90 | 90 |
| Heavy Vehicles, % | 2 | 2 | 2 | 2 | 2 | 2 |
| Mvmt Flow | 6 | 488 | 394 | 10 | 32 | 14 |

| Major/Minor | Major1 | | Major2 | | Minor2 | |
|---|---|---|---|---|---|---|
| Conflicting Flow All | 404 | 0 | - | 0 | 894 | 394 |
| Stage 1 | - | - | - | - | 394 | - |
| Stage 2 | - | - | - | - | 500 | - |
| Critical Hdwy | 4.12 | - | - | - | 6.42 | 6.22 |
| Critical Hdwy Stg 1 | - | - | - | - | 5.42 | - |
| Critical Hdwy Stg 2 | - | - | - | - | 5.42 | - |
| Follow-up Hdwy | 2.218 | - | - | - | 3.518 | 3.318 |
| Pot Cap-1 Maneuver | 1155 | - | - | - | 312 | 655 |
| Stage 1 | - | - | - | - | 681 | - |
| Stage 2 | - | - | - | - | 609 | - |
| Platoon blocked, % | | - | - | - | | |
| Mov Cap-1 Maneuver | 1155 | - | - | - | 310 | 655 |
| Mov Cap-2 Maneuver | - | - | - | - | 310 | - |
| Stage 1 | - | - | - | - | 678 | - |
| Stage 2 | - | - | - | - | 609 | - |

| Approach | EB | WB | SB |
|---|---|---|---|
| HCM Control Delay, s | 0.1 | 0 | 16.1 |
| HCM LOS | | | C |

| Minor Lane/Major Mvmt | EBL | EBT | WBT | WBR | SBLn1 |
|---|---|---|---|---|---|
| Capacity (veh/h) | 1155 | - | - | - | 370 |
| HCM Lane V/C Ratio | 0.005 | - | - | - | 0.126 |
| HCM Control Delay (s) | 8.1 | - | - | - | 16.1 |
| HCM Lane LOS | A | - | - | - | C |
| HCM 95th %tile Q(veh) | 0 | - | - | - | 0.4 |

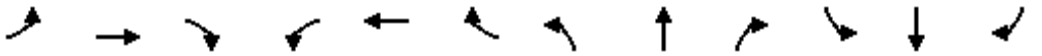

| Lane Group | EBL | EBT | EBR | WBL | WBT | WBR | NBL | NBT | NBR | SBL | SBT | SBR |
|---|---|---|---|---|---|---|---|---|---|---|---|---|
| Lane Configurations | | | | | | | | | | | | |
| Traffic Volume (vph) | 58 | 125 | 41 | 172 | 107 | 139 | 31 | 103 | 174 | 139 | 147 | 55 |
| Future Volume (vph) | 58 | 125 | 41 | 172 | 107 | 139 | 31 | 103 | 174 | 139 | 147 | 55 |
| Ideal Flow (vphpl) | 1900 | 1900 | 1900 | 1900 | 1900 | 1900 | 1900 | 1900 | 1900 | 1900 | 1900 | 1900 |
| Storage Length (ft) | 250 | | 0 | 150 | | 150 | 100 | | 0 | 150 | | 175 |
| Storage Lanes | 1 | | 0 | 1 | | 1 | 1 | | 0 | 1 | | 1 |
| Taper Length (ft) | 100 | | | 100 | | | 100 | | | 100 | | |
| Lane Util. Factor | 1.00 | 1.00 | 1.00 | 1.00 | 1.00 | 1.00 | 1.00 | 1.00 | 1.00 | 1.00 | 1.00 | 1.00 |
| Frt | | 0.963 | | | | 0.850 | | 0.906 | | | | 0.850 |
| Flt Protected | 0.950 | | | 0.950 | | | 0.950 | | | 0.950 | | |
| Satd. Flow (prot) | 1770 | 1794 | 0 | 1770 | 1863 | 1583 | 1770 | 1688 | 0 | 1770 | 1863 | 1583 |
| Flt Permitted | 0.681 | | | 0.641 | | | 0.654 | | | 0.573 | | |
| Satd. Flow (perm) | 1269 | 1794 | 0 | 1194 | 1863 | 1583 | 1218 | 1688 | 0 | 1067 | 1863 | 1583 |
| Right Turn on Red | | | No | | | No | | | No | | | No |
| Satd. Flow (RTOR) | | | | | | | | | | | | |
| Link Speed (mph) | | 45 | | | 45 | | | 45 | | | 45 | |
| Link Distance (ft) | | 1889 | | | 1311 | | | 1771 | | | 2925 | |
| Travel Time (s) | | 28.6 | | | 19.9 | | | 26.8 | | | 44.3 | |
| Peak Hour Factor | 0.90 | 0.90 | 0.90 | 0.90 | 0.90 | 0.90 | 0.90 | 0.90 | 0.90 | 0.90 | 0.90 | 0.90 |
| Adj. Flow (vph) | 64 | 139 | 46 | 191 | 119 | 154 | 34 | 114 | 193 | 154 | 163 | 61 |
| Shared Lane Traffic (%) | | | | | | | | | | | | |
| Lane Group Flow (vph) | 64 | 185 | 0 | 191 | 119 | 154 | 34 | 307 | 0 | 154 | 163 | 61 |
| Turn Type | Perm | NA | | Perm | NA | Perm | Perm | NA | | Perm | NA | Perm |
| Protected Phases | | 2 | | | 6 | | | 4 | | | 8 | |
| Permitted Phases | 2 | | | 6 | | 6 | 4 | | | 8 | | 8 |
| Detector Phase | 2 | 2 | | 6 | 6 | 6 | 4 | 4 | | 8 | 8 | 8 |
| Switch Phase | | | | | | | | | | | | |
| Minimum Initial (s) | 7.0 | 7.0 | | 7.0 | 7.0 | 7.0 | 7.0 | 7.0 | | 7.0 | 7.0 | 7.0 |
| Minimum Split (s) | 14.0 | 14.0 | | 14.0 | 14.0 | 14.0 | 14.0 | 14.0 | | 14.0 | 14.0 | 14.0 |
| Total Split (s) | 29.0 | 29.0 | | 29.0 | 29.0 | 29.0 | 31.0 | 31.0 | | 31.0 | 31.0 | 31.0 |
| Total Split (%) | 48.3% | 48.3% | | 48.3% | 48.3% | 48.3% | 51.7% | 51.7% | | 51.7% | 51.7% | 51.7% |
| Maximum Green (s) | 22.0 | 22.0 | | 22.0 | 22.0 | 22.0 | 24.0 | 24.0 | | 24.0 | 24.0 | 24.0 |
| Yellow Time (s) | 5.0 | 5.0 | | 5.0 | 5.0 | 5.0 | 5.0 | 5.0 | | 5.0 | 5.0 | 5.0 |
| All-Red Time (s) | 2.0 | 2.0 | | 2.0 | 2.0 | 2.0 | 2.0 | 2.0 | | 2.0 | 2.0 | 2.0 |
| Lost Time Adjust (s) | -2.0 | -2.0 | | -2.0 | -2.0 | -2.0 | -2.0 | -2.0 | | -2.0 | -2.0 | -2.0 |
| Total Lost Time (s) | 5.0 | 5.0 | | 5.0 | 5.0 | 5.0 | 5.0 | 5.0 | | 5.0 | 5.0 | 5.0 |
| Lead/Lag | | | | | | | | | | | | |
| Lead-Lag Optimize? | | | | | | | | | | | | |
| Vehicle Extension (s) | 3.0 | 3.0 | | 3.0 | 3.0 | 3.0 | 3.0 | 3.0 | | 3.0 | 3.0 | 3.0 |
| Recall Mode | Min | Min | | Min | Min | Min | None | None | | None | None | None |
| Act Effct Green (s) | 14.5 | 14.5 | | 14.5 | 14.5 | 14.5 | 15.0 | 15.0 | | 15.0 | 15.0 | 15.0 |
| Actuated g/C Ratio | 0.36 | 0.36 | | 0.36 | 0.36 | 0.36 | 0.37 | 0.37 | | 0.37 | 0.37 | 0.37 |
| v/c Ratio | 0.14 | 0.29 | | 0.44 | 0.18 | 0.27 | 0.07 | 0.49 | | 0.39 | 0.23 | 0.10 |
| Control Delay | 10.3 | 11.1 | | 14.2 | 10.2 | 11.2 | 9.8 | 13.4 | | 13.6 | 10.5 | 9.7 |
| Queue Delay | 0.0 | 0.0 | | 0.0 | 0.0 | 0.0 | 0.0 | 0.0 | | 0.0 | 0.0 | 0.0 |
| Total Delay | 10.3 | 11.1 | | 14.2 | 10.2 | 11.2 | 9.8 | 13.4 | | 13.6 | 10.5 | 9.7 |
| LOS | B | B | | B | B | B | A | B | | B | B | A |
| Approach Delay | | 10.9 | | | 12.2 | | | 13.0 | | | 11.6 | |
| Approach LOS | | B | | | B | | | B | | | B | |

| Lane Group | EBL | EBT | EBR | WBL | WBT | WBR | NBL | NBT | NBR | SBL | SBT | SBR |
|---|---|---|---|---|---|---|---|---|---|---|---|---|
| Queue Length 50th (ft) | 9 | 26 | | 29 | 16 | 22 | 4 | 45 | | 22 | 21 | 8 |
| Queue Length 95th (ft) | 33 | 77 | | 89 | 52 | 67 | 21 | 131 | | 75 | 69 | 31 |
| Internal Link Dist (ft) | | 1809 | | | 1231 | | | 1691 | | | 2845 | |
| Turn Bay Length (ft) | 250 | | | 150 | | 150 | 100 | | | 150 | | 175 |
| Base Capacity (vph) | 804 | 1137 | | 757 | 1181 | 1004 | 836 | 1159 | | 733 | 1280 | 1088 |
| Starvation Cap Reductn | 0 | 0 | | 0 | 0 | 0 | 0 | 0 | | 0 | 0 | 0 |
| Spillback Cap Reductn | 0 | 0 | | 0 | 0 | 0 | 0 | 0 | | 0 | 0 | 0 |
| Storage Cap Reductn | 0 | 0 | | 0 | 0 | 0 | 0 | 0 | | 0 | 0 | 0 |
| Reduced v/c Ratio | 0.08 | 0.16 | | 0.25 | 0.10 | 0.15 | 0.04 | 0.26 | | 0.21 | 0.13 | 0.06 |

| Intersection Summary | | | |
|---|---|---|---|
| Area Type: | Other | | |
| Cycle Length: 60 | | | |
| Actuated Cycle Length: 40.2 | | | |
| Natural Cycle: 40 | | | |
| Control Type: Actuated-Uncoordinated | | | |
| Maximum v/c Ratio: 0.49 | | | |
| Intersection Signal Delay: 12.0 | | Intersection LOS: B | |
| Intersection Capacity Utilization 59.1% | | ICU Level of Service B | |
| Analysis Period (min) 15 | | | |

Splits and Phases: 1: Richardson Rd & Olive Chapel Rd

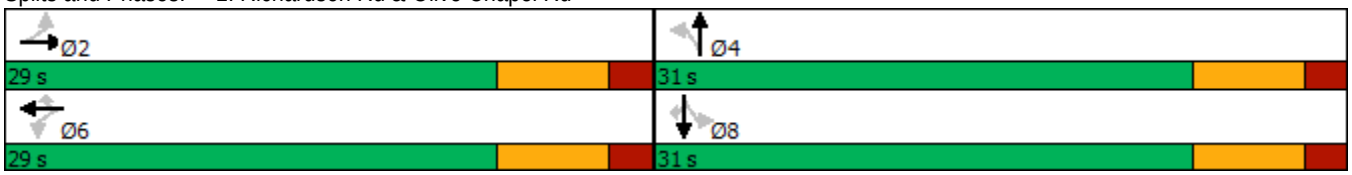

| Intersection | |
|---|---|
| Int Delay, s/veh | 18 |

| Movement | EBT | EBR | WBL | WBT | NBL | NBR |
|---|---|---|---|---|---|---|
| Lane Configurations | | | | | | |
| Traffic Vol, veh/h | 537 | 47 | 235 | 599 | 30 | 168 |
| Future Vol, veh/h | 537 | 47 | 235 | 599 | 30 | 168 |
| Conflicting Peds, #/hr | 0 | 0 | 0 | 0 | 0 | 0 |
| Sign Control | Free | Free | Free | Free | Stop | Stop |
| RT Channelized | - | None | - | None | - | None |
| Storage Length | - | - | - | - | 0 | - |
| Veh in Median Storage, # | 0 | - | - | 0 | 0 | - |
| Grade, % | 0 | - | - | 0 | 0 | - |
| Peak Hour Factor | 90 | 90 | 90 | 90 | 90 | 90 |
| Heavy Vehicles, % | 2 | 2 | 2 | 2 | 2 | 2 |
| Mvmt Flow | 597 | 52 | 261 | 666 | 33 | 187 |

| Major/Minor | Major1 | | Major2 | | Minor1 | |
|---|---|---|---|---|---|---|
| Conflicting Flow All | 0 | 0 | 649 | 0 | 1811 | 623 |
| Stage 1 | - | - | - | - | 623 | - |
| Stage 2 | - | - | - | - | 1188 | - |
| Critical Hdwy | - | - | 4.12 | - | 6.42 | 6.22 |
| Critical Hdwy Stg 1 | - | - | - | - | 5.42 | - |
| Critical Hdwy Stg 2 | - | - | - | - | 5.42 | - |
| Follow-up Hdwy | - | - | 2.218 | - | 3.518 | 3.318 |
| Pot Cap-1 Maneuver | - | - | 937 | - | 86 | 486 |
| Stage 1 | - | - | - | - | 535 | - |
| Stage 2 | - | - | - | - | 289 | - |
| Platoon blocked, % | - | - | | - | | |
| Mov Cap-1 Maneuver | - | - | 937 | - | 48 | 486 |
| Mov Cap-2 Maneuver | - | - | - | - | 48 | - |
| Stage 1 | - | - | - | - | 535 | - |
| Stage 2 | - | - | - | - | 161 | - |

| Approach | EB | WB | NB |
|---|---|---|---|
| HCM Control Delay, s | 0 | 2.9 | 134.5 |
| HCM LOS | | | F |

| Minor Lane/Major Mvmt | NBLn1 | EBT | EBR | WBL | WBT |
|---|---|---|---|---|---|
| Capacity (veh/h) | 204 | - | - | 937 | - |
| HCM Lane V/C Ratio | 1.078 | - | - | 0.279 | - |
| HCM Control Delay (s) | 134.5 | - | - | 10.3 | 0 |
| HCM Lane LOS | F | - | - | B | A |
| HCM 95th %tile Q(veh) | 10.1 | - | - | 1.1 | - |

| Intersection | |
|---|---|
| Int Delay, s/veh | 3.1 |

| Movement | EBL | EBT | EBR | WBL | WBT | WBR | NBL | NBT | NBR | SBL | SBT | SBR |
|---|---|---|---|---|---|---|---|---|---|---|---|---|
| Lane Configurations | | ↕ | | | ↕ | | ↰ | ↱ | | ↰ | ↱ | |
| Traffic Vol, veh/h | 2 | 1 | 3 | 15 | 1 | 116 | 2 | 599 | 23 | 178 | 648 | 3 |
| Future Vol, veh/h | 2 | 1 | 3 | 15 | 1 | 116 | 2 | 599 | 23 | 178 | 648 | 3 |
| Conflicting Peds, #/hr | 0 | 0 | 0 | 0 | 0 | 0 | 0 | 0 | 0 | 0 | 0 | 0 |
| Sign Control | Stop | Stop | Stop | Stop | Stop | Stop | Free | Free | Free | Free | Free | Free |
| RT Channelized | - | - | None | - | - | None | - | - | None | - | - | None |
| Storage Length | - | - | - | - | - | - | 125 | - | - | 150 | - | - |
| Veh in Median Storage, # | - | 1 | - | - | 1 | - | - | 0 | - | - | 0 | - |
| Grade, % | - | 0 | - | - | 0 | - | - | 0 | - | - | 0 | - |
| Peak Hour Factor | 90 | 90 | 90 | 90 | 90 | 90 | 90 | 90 | 90 | 90 | 90 | 90 |
| Heavy Vehicles, % | 2 | 2 | 2 | 2 | 2 | 2 | 2 | 2 | 2 | 2 | 2 | 2 |
| Mvmt Flow | 2 | 1 | 3 | 17 | 1 | 129 | 2 | 666 | 26 | 198 | 720 | 3 |

| Major/Minor | Minor2 | | | Minor1 | | | Major1 | | | Major2 | | |
|---|---|---|---|---|---|---|---|---|---|---|---|---|
| Conflicting Flow All | 1866 | 1814 | 722 | 1803 | 1802 | 679 | 723 | 0 | 0 | 692 | 0 | 0 |
| Stage 1 | 1118 | 1118 | - | 683 | 683 | - | - | - | - | - | - | - |
| Stage 2 | 748 | 696 | - | 1120 | 1119 | - | - | - | - | - | - | - |
| Critical Hdwy | 7.12 | 6.52 | 6.22 | 7.12 | 6.52 | 6.22 | 4.12 | - | - | 4.12 | - | - |
| Critical Hdwy Stg 1 | 6.12 | 5.52 | - | 6.12 | 5.52 | - | - | - | - | - | - | - |
| Critical Hdwy Stg 2 | 6.12 | 5.52 | - | 6.12 | 5.52 | - | - | - | - | - | - | - |
| Follow-up Hdwy | 3.518 | 4.018 | 3.318 | 3.518 | 4.018 | 3.318 | 2.218 | - | - | 2.218 | - | - |
| Pot Cap-1 Maneuver | 56 | 78 | 427 | 62 | 80 | 452 | 879 | - | - | 903 | - | - |
| Stage 1 | 251 | 282 | - | 439 | 449 | - | - | - | - | - | - | - |
| Stage 2 | 404 | 443 | - | 251 | 282 | - | - | - | - | - | - | - |
| Platoon blocked, % | | | | | | | | - | - | | - | - |
| Mov Cap-1 Maneuver | 33 | 61 | 427 | 51 | 62 | 452 | 879 | - | - | 903 | - | - |
| Mov Cap-2 Maneuver | 71 | 133 | - | 140 | 158 | - | - | - | - | - | - | - |
| Stage 1 | 250 | 220 | - | 438 | 448 | - | - | - | - | - | - | - |
| Stage 2 | 287 | 442 | - | 193 | 220 | - | - | - | - | - | - | - |

| Approach | EB | WB | NB | SB |
|---|---|---|---|---|
| HCM Control Delay, s | 32 | 21.9 | 0 | 2.2 |
| HCM LOS | D | C | | |

| Minor Lane/Major Mvmt | NBL | NBT | NBR | EBLn1 | WBLn1 | SBL | SBT | SBR |
|---|---|---|---|---|---|---|---|---|
| Capacity (veh/h) | 879 | - | - | 140 | 357 | 903 | - | - |
| HCM Lane V/C Ratio | 0.003 | - | - | 0.048 | 0.411 | 0.219 | - | - |
| HCM Control Delay (s) | 9.1 | - | - | 32 | 21.9 | 10.1 | - | - |
| HCM Lane LOS | A | - | - | D | C | B | - | - |
| HCM 95th %tile Q(veh) | 0 | - | - | 0.1 | 1.9 | 0.8 | - | - |

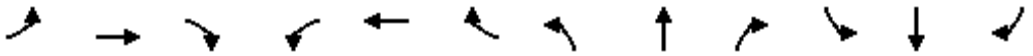

| Lane Group | EBL | EBT | EBR | WBL | WBT | WBR | NBL | NBT | NBR | SBL | SBT | SBR |
|---|---|---|---|---|---|---|---|---|---|---|---|---|
| Lane Configurations | | | | | | | | | | | | |
| Traffic Volume (vph) | 0 | 1166 | 399 | 0 | 0 | 0 | 0 | 0 | 1371 | 0 | 1027 | 0 |
| Future Volume (vph) | 0 | 1166 | 399 | 0 | 0 | 0 | 0 | 0 | 1371 | 0 | 1027 | 0 |
| Ideal Flow (vphpl) | 1900 | 1900 | 1900 | 1900 | 1900 | 1900 | 1900 | 1900 | 1900 | 1900 | 1900 | 1900 |
| Grade (%) | | -2% | | | 0% | | | 1% | | | 0% | |
| Storage Length (ft) | 0 | | 175 | 0 | | 0 | 0 | | 0 | 0 | | 0 |
| Storage Lanes | 0 | | 1 | 0 | | 0 | 0 | | 2 | 0 | | 0 |
| Taper Length (ft) | 100 | | | 100 | | | 100 | | | 100 | | |
| Lane Util. Factor | 1.00 | 0.95 | 1.00 | 1.00 | 1.00 | 1.00 | 1.00 | 1.00 | 0.88 | 0.95 | 0.95 | 1.00 |
| Frt | | | 0.850 | | | | | | 0.850 | | | |
| Flt Protected | | | | | | | | | | | | |
| Satd. Flow (prot) | 0 | 3575 | 1599 | 0 | 0 | 0 | 0 | 0 | 2773 | 0 | 3539 | 0 |
| Flt Permitted | | | | | | | | | | | | |
| Satd. Flow (perm) | 0 | 3575 | 1599 | 0 | 0 | 0 | 0 | 0 | 2773 | 0 | 3539 | 0 |
| Right Turn on Red | | | No | | | No | | | No | No | | No |
| Satd. Flow (RTOR) | | | | | | | | | | | | |
| Link Speed (mph) | | 55 | | | 55 | | | 45 | | | 35 | |
| Link Distance (ft) | | 3066 | | | 489 | | | 978 | | | 454 | |
| Travel Time (s) | | 38.0 | | | 6.1 | | | 14.8 | | | 8.8 | |
| Peak Hour Factor | 0.90 | 0.90 | 0.90 | 0.90 | 0.90 | 0.90 | 0.90 | 0.90 | 0.90 | 0.90 | 0.90 | 0.90 |
| Adj. Flow (vph) | 0 | 1296 | 443 | 0 | 0 | 0 | 0 | 0 | 1523 | 0 | 1141 | 0 |
| Shared Lane Traffic (%) | | | | | | | | | | | | |
| Lane Group Flow (vph) | 0 | 1296 | 443 | 0 | 0 | 0 | 0 | 0 | 1523 | 0 | 1141 | 0 |
| Turn Type | | NA | Perm | | | | | | Perm | | NA | |
| Protected Phases | | 2 | | | | | | | | | 8 | |
| Permitted Phases | | | 2 | | | | | | 8 | 8 | | |
| Detector Phase | | 2 | 2 | | | | | | 8 | 8 | 8 | |
| Switch Phase | | | | | | | | | | | | |
| Minimum Initial (s) | | 14.0 | 14.0 | | | | | | 7.0 | 7.0 | 7.0 | |
| Minimum Split (s) | | 20.8 | 20.8 | | | | | | 13.2 | 13.2 | 13.2 | |
| Total Split (s) | | 49.0 | 49.0 | | | | | | 71.0 | 71.0 | 71.0 | |
| Total Split (%) | | 40.8% | 40.8% | | | | | | 59.2% | 59.2% | 59.2% | |
| Maximum Green (s) | | 42.2 | 42.2 | | | | | | 64.8 | 64.8 | 64.8 | |
| Yellow Time (s) | | 5.4 | 5.4 | | | | | | 3.0 | 3.0 | 3.0 | |
| All-Red Time (s) | | 1.4 | 1.4 | | | | | | 3.2 | 3.2 | 3.2 | |
| Lost Time Adjust (s) | | -1.8 | -1.8 | | | | | | -1.2 | | -1.2 | |
| Total Lost Time (s) | | 5.0 | 5.0 | | | | | | 5.0 | | 5.0 | |
| Lead/Lag | | | | | | | | | | | | |
| Lead-Lag Optimize? | | | | | | | | | | | | |
| Vehicle Extension (s) | | 6.0 | 6.0 | | | | | | 2.0 | 2.0 | 2.0 | |
| Minimum Gap (s) | | 3.4 | 3.4 | | | | | | 0.2 | 0.2 | 0.2 | |
| Time Before Reduce (s) | | 15.0 | 15.0 | | | | | | 0.0 | 0.0 | 0.0 | |
| Time To Reduce (s) | | 45.0 | 45.0 | | | | | | 0.0 | 0.0 | 0.0 | |
| Recall Mode | | C-Min | C-Min | | | | | | None | None | None | |
| Act Effct Green (s) | | 44.0 | 44.0 | | | | | | 66.0 | | 66.0 | |
| Actuated g/C Ratio | | 0.37 | 0.37 | | | | | | 0.55 | | 0.55 | |
| v/c Ratio | | 0.99 | 0.76 | | | | | | 1.00 | | 0.59 | |
| Control Delay | | 60.5 | 43.0 | | | | | | 50.1 | | 19.5 | |
| Queue Delay | | 0.0 | 0.0 | | | | | | 0.0 | | 0.0 | |

| Lane Group | EBL | EBT | EBR | WBL | WBT | WBR | NBL | NBT | NBR | SBL | SBT | SBR |
|---|---|---|---|---|---|---|---|---|---|---|---|---|
| Total Delay | | 60.5 | 43.0 | | | | | | 50.1 | | 19.5 | |
| LOS | | E | D | | | | | | D | | B | |
| Approach Delay | | 56.0 | | | | | | 50.1 | | | 19.5 | |
| Approach LOS | | E | | | | | | D | | | B | |
| Queue Length 50th (ft) | | 520 | 298 | | | | | | 640 | | 295 | |
| Queue Length 95th (ft) | | #681 | 430 | | | | | | #847 | | 361 | |
| Internal Link Dist (ft) | | 2986 | | | 409 | | | 898 | | | 374 | |
| Turn Bay Length (ft) | | | 175 | | | | | | | | | |
| Base Capacity (vph) | | 1310 | 586 | | | | | | 1525 | | 1946 | |
| Starvation Cap Reductn | | 0 | 0 | | | | | | 0 | | 0 | |
| Spillback Cap Reductn | | 0 | 0 | | | | | | 0 | | 0 | |
| Storage Cap Reductn | | 0 | 0 | | | | | | 0 | | 0 | |
| Reduced v/c Ratio | | 0.99 | 0.76 | | | | | | 1.00 | | 0.59 | |

| Intersection Summary | | | |
|---|---|---|---|
| Area Type: | Other | | |
| Cycle Length: 120 | | | |
| Actuated Cycle Length: 120 | | | |
| Offset: 0 (0%), Referenced to phase 2:EBT, Start of Green | | | |
| Natural Cycle: 100 | | | |
| Control Type: Actuated-Coordinated | | | |
| Maximum v/c Ratio: 1.00 | | | |
| Intersection Signal Delay: 44.5 | | Intersection LOS: D | |
| Intersection Capacity Utilization 134.1% | | ICU Level of Service H | |
| Analysis Period (min) 15 | | | |
| # 95th percentile volume exceeds capacity, queue may be longer. | | | |
| Queue shown is maximum after two cycles. | | | |

Splits and Phases: 4: Richardson Rd & US 64 EB

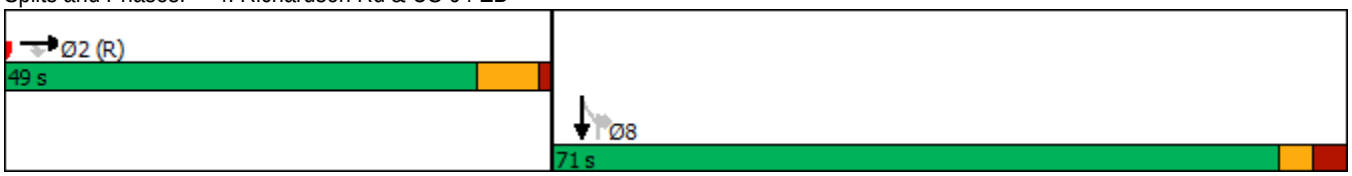

| Lane Group | EBT | EBR | WBL | WBT | NBL | NBR |
|---|---|---|---|---|---|---|
| Lane Configurations | | | | | | |
| Traffic Volume (vph) | 0 | 0 | 0 | 2222 | 479 | 0 |
| Future Volume (vph) | 0 | 0 | 0 | 2222 | 479 | 0 |
| Ideal Flow (vphpl) | 1900 | 1900 | 1900 | 1900 | 1900 | 1900 |
| Lane Util. Factor | 1.00 | 1.00 | 1.00 | 0.95 | 0.97 | 1.00 |
| Frt | | | | | | |
| Flt Protected | | | | | 0.950 | |
| Satd. Flow (prot) | 0 | 0 | 0 | 3539 | 3433 | 0 |
| Flt Permitted | | | | | 0.950 | |
| Satd. Flow (perm) | 0 | 0 | 0 | 3539 | 3433 | 0 |
| Right Turn on Red | | No | | | No | No |
| Satd. Flow (RTOR) | | | | | | |
| Link Speed (mph) | 55 | | | 55 | 25 | |
| Link Distance (ft) | 459 | | | 2512 | 426 | |
| Travel Time (s) | 5.7 | | | 31.1 | 11.6 | |
| Peak Hour Factor | 0.90 | 0.90 | 0.90 | 0.90 | 0.90 | 0.90 |
| Adj. Flow (vph) | 0 | 0 | 0 | 2469 | 532 | 0 |
| Shared Lane Traffic (%) | | | | | | |
| Lane Group Flow (vph) | 0 | 0 | 0 | 2469 | 532 | 0 |
| Turn Type | | | | NA | Prot | |
| Protected Phases | | | | 6 | 8 | |
| Permitted Phases | | | | | | |
| Detector Phase | | | | 6 | 8 | |
| Switch Phase | | | | | | |
| Minimum Initial (s) | | | | 14.0 | 7.0 | |
| Minimum Split (s) | | | | 20.2 | 13.3 | |
| Total Split (s) | | | | 70.0 | 20.0 | |
| Total Split (%) | | | | 77.8% | 22.2% | |
| Maximum Green (s) | | | | 63.8 | 13.7 | |
| Yellow Time (s) | | | | 5.2 | 3.0 | |
| All-Red Time (s) | | | | 1.0 | 3.3 | |
| Lost Time Adjust (s) | | | | -1.2 | -1.3 | |
| Total Lost Time (s) | | | | 5.0 | 5.0 | |
| Lead/Lag | | | | | | |
| Lead-Lag Optimize? | | | | | | |
| Vehicle Extension (s) | | | | 6.0 | 2.0 | |
| Minimum Gap (s) | | | | 3.4 | 0.2 | |
| Time Before Reduce (s) | | | | 15.0 | 0.0 | |
| Time To Reduce (s) | | | | 45.0 | 0.0 | |
| Recall Mode | | | | C-Min | None | |
| Act Effct Green (s) | | | | 65.0 | 15.0 | |
| Actuated g/C Ratio | | | | 0.72 | 0.17 | |
| v/c Ratio | | | | 0.97 | 0.93 | |
| Control Delay | | | | 24.1 | 62.1 | |
| Queue Delay | | | | 0.0 | 0.0 | |
| Total Delay | | | | 24.1 | 62.1 | |
| LOS | | | | C | E | |
| Approach Delay | | | | 24.1 | 62.1 | |
| Approach LOS | | | | C | E | |

| Lane Group | EBT | EBR | WBL | WBT | NBL | NBR |
|---|---|---|---|---|---|---|
| Queue Length 50th (ft) | | | | 567 | 155 | |
| Queue Length 95th (ft) | | | | #886 | #252 | |
| Internal Link Dist (ft) | 379 | | | 2432 | 346 | |
| Turn Bay Length (ft) | | | | | | |
| Base Capacity (vph) | | | | 2555 | 572 | |
| Starvation Cap Reductn | | | | 0 | 0 | |
| Spillback Cap Reductn | | | | 0 | 0 | |
| Storage Cap Reductn | | | | 0 | 0 | |
| Reduced v/c Ratio | | | | 0.97 | 0.93 | |

| Intersection Summary | | | |
|---|---|---|---|
| Area Type: | Other | | |
| Cycle Length: 90 | | | |
| Actuated Cycle Length: 90 | | | |
| Offset: 0 (0%), Referenced to phase 6:WBT, Start of Green | | | |
| Natural Cycle: 90 | | | |
| Control Type: Actuated-Coordinated | | | |
| Maximum v/c Ratio: 0.97 | | | |
| Intersection Signal Delay: 30.9 | | Intersection LOS: C | |
| Intersection Capacity Utilization 83.4% | | ICU Level of Service E | |
| Analysis Period (min) 15 | | | |

\# 95th percentile volume exceeds capacity, queue may be longer.
Queue shown is maximum after two cycles.

Splits and Phases: 5: U-Turn East & US 64 WB



| Intersection | |
|---|---|
| Int Delay, s/veh | 0.6 |

| Movement | EBL | EBT | WBT | WBR | SBL | SBR |
|---|---|---|---|---|---|---|
| Lane Configurations | | | | | | |
| Traffic Vol, veh/h | 15 | 566 | 599 | 30 | 18 | 8 |
| Future Vol, veh/h | 15 | 566 | 599 | 30 | 18 | 8 |
| Conflicting Peds, #/hr | 0 | 0 | 0 | 0 | 0 | 0 |
| Sign Control | Free | Free | Free | Free | Stop | Stop |
| RT Channelized | - | None | - | None | - | None |
| Storage Length | 100 | - | - | 100 | 0 | - |
| Veh in Median Storage, # | - | 0 | 0 | - | 0 | - |
| Grade, % | - | 0 | 0 | - | 0 | - |
| Peak Hour Factor | 90 | 90 | 90 | 90 | 90 | 90 |
| Heavy Vehicles, % | 2 | 2 | 2 | 2 | 2 | 2 |
| Mvmt Flow | 17 | 629 | 666 | 33 | 20 | 9 |

| Major/Minor | Major1 | | | Major2 | | |
|---|---|---|---|---|---|---|
| Conflicting Flow All | 699 | 0 | - | 0 | 1329 | 666 |
| Stage 1 | - | - | - | - | 666 | - |
| Stage 2 | - | - | - | - | 663 | - |
| Critical Hdwy | 4.12 | - | - | - | 6.42 | 6.22 |
| Critical Hdwy Stg 1 | - | - | - | - | 5.42 | - |
| Critical Hdwy Stg 2 | - | - | - | - | 5.42 | - |
| Follow-up Hdwy | 2.218 | - | - | - | 3.518 | 3.318 |
| Pot Cap-1 Maneuver | 898 | - | - | - | 171 | 459 |
| Stage 1 | - | - | - | - | 511 | - |
| Stage 2 | - | - | - | - | 512 | - |
| Platoon blocked, % | | - | - | - | | |
| Mov Cap-1 Maneuver | 898 | - | - | - | 168 | 459 |
| Mov Cap-2 Maneuver | - | - | - | - | 168 | - |
| Stage 1 | - | - | - | - | 501 | - |
| Stage 2 | - | - | - | - | 512 | - |

| Approach | EB | WB | SB |
|---|---|---|---|
| HCM Control Delay, s | 0.2 | 0 | 25 |
| HCM LOS | | | D |

| Minor Lane/Major Mvmt | EBL | EBT | WBT | WBR | SBLn1 |
|---|---|---|---|---|---|
| Capacity (veh/h) | 898 | - | - | - | 209 |
| HCM Lane V/C Ratio | 0.019 | - | - | - | 0.138 |
| HCM Control Delay (s) | 9.1 | - | - | - | 25 |
| HCM Lane LOS | A | - | - | - | D |
| HCM 95th %tile Q(veh) | 0.1 | - | - | - | 0.5 |



www.vhb.com

## Report Requirements:

Per NCGS §160D-604(b), all proposed amendments to the zoning ordinance or zoning map shall be submitted to the Planning Board for review and comment. If no written report is received from the Planning Board within 30 days of referral of the amendment to the Planning Board, the Town Council may act on the amendment without the Planning Board report. The Town Council is not bound by the recommendations, if any, of the Planning Board.

Per NCGS §160D-604(d), the Planning Board shall advise and comment on whether the proposed action is consistent with all applicable officially adopted plans, and provide a written recommendation to the Town Council that addresses plan consistency and other matters as deemed appropriate by the Planning Board, but a comment by the Planning Board that a proposed amendment is inconsistent with the officially adopted plans shall not preclude consideration or approval of the proposed amendment by the Town Council.

**PROJECT DESCRIPTION:**

**Acreage:** ±79.79 acres

**PIN(s):** 0721492629, 0722406699, & 0722411102

**Current Zoning:** Rural Residential (RR) & R-80W

**Proposed Zoning:** Planned Unit Development-Conditional Zoning (PUD-CZ)

**2045 Land Use Map:** Medium Density Residential

**Town Limits:** ETJ and Outside (annexation of portion in Wake County is required with rezoning)

## Applicable Officially Adopted Plans:

The Board must state whether the project is consistent or inconsistent with the following officially adopted plans, if applicable. Applicable plans have a check mark next to them.

☑ 2045 Land Use Map
☑ Consistent ☐ Inconsistent Reason: _____

☑ Apex Transportation Plan
☑ Consistent ☐ Inconsistent Reason: _____

☑ Parks, Recreation, Open Space, and Greenways Plan
☑ Consistent ☐ Inconsistent Reason: _____

**Legislative Considerations:**

The applicant shall propose site-specific standards and conditions that take into account the following considerations, which are considerations that are relevant to the legislative determination of whether or not the proposed conditional zoning district rezoning request is in the public interest. These considerations do not exclude the legislative consideration of any other factor that is relevant to the public interest.

1. *Consistency with 2045 Land Use Plan*. The proposed Conditional Zoning (CZ) District use's appropriateness for its proposed location and consistency with the purposes, goals, objectives, and policies of the 2045 Land Use Plan.
   ☑ Consistent ☐ Inconsistent Reason: _____

2. *Compatibility.* The proposed Conditional Zoning (CZ) District use's appropriateness for its proposed location and compatibility with the character of surrounding land uses.
   ☑ Consistent ☐ Inconsistent Reason: _____

3. *Zoning district supplemental standards*. The proposed Conditional Zoning (CZ) District use's compliance with Sec. 4.4 *Supplemental Standards*, if applicable.
   ☑ Consistent ☐ Inconsistent Reason: _____

4. *Design minimizes adverse impact.* The design of the proposed Conditional Zoning (CZ) District use's minimization of adverse effects, including visual impact of the proposed use on adjacent lands; and avoidance of significant adverse impacts on surrounding lands regarding trash, traffic, service delivery, parking and loading, odors, noise, glare, and vibration and not create a nuisance.
   ☑ Consistent ☐ Inconsistent Reason: _____

5. *Design minimizes environmental impact.* The proposed Conditional Zoning District use's minimization of environmental impacts and protection from significant deterioration of water and air resources, wildlife habitat, scenic resources, and other natural resources.
   ☑ Consistent ☐ Inconsistent Reason: _____

6. *Impact on public facilities.* The proposed Conditional Zoning (CZ) District use's avoidance of having adverse impacts on public facilities and services, including roads, potable water and wastewater facilities, parks, schools, police, fire and EMS facilities.
☑ Consistent ☐ Inconsistent Reason: _____

7. *Health, safety, and welfare.* The proposed Conditional Zoning (CZ) District use's effect on the health, safety, or welfare of the residents of the Town or its ETJ.
☑ Consistent ☐ Inconsistent Reason: _____

8. *Detrimental to adjacent properties.* Whether the proposed Conditional Zoning (CZ) District use is substantially detrimental to adjacent properties.
☑ Consistent ☐ Inconsistent Reason: _____

9. *Not constitute nuisance or hazard.* Whether the proposed Conditional Zoning (CZ) District use constitutes a nuisance or hazard due to traffic impact or noise, or because of the number of persons who will be using the Conditional Zoning (CZ) District use.
☑ Consistent ☐ Inconsistent Reason: _____

10. *Other relevant standards of this Ordinance.* Whether the proposed Conditional Zoning (CZ) District use complies with all standards imposed on it by all other applicable provisions of this Ordinance for use, layout, and general development characteristics.
☑ Consistent ☐ Inconsistent Reason: _____

**Planning Board Recommendation:**

Motion: To recommend approval as presented.

Introduced by Planning Board member: Keith Braswell

Seconded by Planning Board member: Mark Steele

☐ *Approval*: the project is consistent with all applicable officially adopted plans and the applicable legislative considerations listed above.

☑ *Approval with conditions*: the project is not consistent with all applicable officially adopted plans and/or the applicable legislative considerations as noted above, so the following conditions are recommended to be included in the project in order to make it fully consistent:

Conditions proposed by the applicant.

☐ *Denial*: the project is not consistent with all applicable officially adopted plans and/or the applicable legislative considerations as noted above.

With 6 Planning Board Member(s) voting "aye"

With 0 Planning Board Member(s) voting "no"

Reasons for dissenting votes:

This report reflects the recommendation of the Planning Board, this the 8th day of March 2021.

Attest:

Michael Marks Digitally signed by Michael Marks Date: 2021.03.09 14:50:15 -05'00'

Michael Marks, Planning Board Chair

Dianne Khin Digitally signed by Dianne Khin Date: 2021.03.08 17:59:54 -05'00'

Dianne Khin, Director of Planning and Community Development

http://www.apexnc.org/DocumentCenter/View/34641/PB-only-Regular-Public-Notice-20CZ14?bidId=
Search...
townofapex.idtplans.com | Unified Development Ordi... | apexnc.org | Planning Department Map ... | Legal Notice of Public Hea... | apexnc.org | Plan Review
File Edit Go to Favorites Help

**TOWN OF APEX**
POST OFFICE BOX 250
APEX, NORTH CAROLINA 27502
PHONE 919-249-3426

**PUBLIC NOTIFICATION**
**OF PUBLIC HEARINGS**
CONDITIONAL ZONING #20CZ14
Hackney PUD

Pursuant to the provisions of North Carolina General Statutes §160A-364 and to the Town of Apex Unified Development Ordinance (UDO) Section 2.2.11, notice is hereby given of public hearings before the Planning Board of the Town of Apex. The purpose of these hearings is to consider the following:

**Applicant:** WithersRavenel
**Authorized Agent:** Brendie Vega, WithersRavenel
**Property Addresses:** 0, 2500, & 2600 Olive Chapel Road
**Acreage:** ±79.79 acres
**Property Identification Numbers (PINs):** 0721492629, 0722406699, & 0722411102
**2045 Land Use Map Designation:** Medium Density Residential
**Existing Zoning of Properties:** Rural Residential (RR) & R-80W
**Proposed Zoning of Properties:** Planned Unit Development-Conditional Zoning (PUD-CZ)

**Public Hearing Location:** Apex Town Hall
Council Chambers, 2nd Floor
73 Hunter Street, Apex, North Carolina

**Planning Board Public Hearing Date and Time: March 8, 2021 4:30 PM**

If you would like to speak during the public hearing, you may sign-in ahead of time by emailing your name and address to bonnie.brock@apexnc.org. You may attend the meeting in person or view the meeting through the Town's YouTube livestream at: https://www.youtube.com/c/townofapexgov.

If you are unable to attend, you may provide comments no later than noon on Friday, March 5, 2021 by email (public.hearing@apexnc.org, 350-word limit) or voicemail (919-362-7300, 3-minute limit) according to the Remote Participation Policy at: http://www.apexnc.org/DocumentCenter/View/31397/. You must provide your name and address for the record. These comments will be read during the Planning Board meeting.

**A separate notice of the Town Council public hearing on this project will be mailed and posted in order to comply with State public notice requirements.**

**Vicinity Map:**




Property owners within 300 feet of the proposed conditional zoning have been sent this notice via first class mail. All interested parties may submit comments with respect to the application by the means specified above. In addition to the above map, the location of the property may be viewed online at https://maps.raleighnc.gov/imaps. The 2045 Land Use Map may be viewed online at www.apexnc.org/DocumentCenter/View/478. You may call 919-249-3426, Department of Planning and Community Development, with questions or for further information. To view the petition and related documents on-line: https://www.apexnc.org/DocumentCenter/View/33875.

Dianne F. Khin, AICP
Director of Planning and Community Development

Published D

1 / 1



1:50 PM
2/23/2021

http://www.apexnc.org/DocumentCenter/View/34685/TC-only-Hybrid-Public-Notice-20CZ14-Hackney-PUD?bidId=
Search...
Planning Department Map Vie... | Legal Notice of Public Hearing... | apexnc.org | Plan Review
File Edit Go to Favorites Help

**TOWN OF APEX**
POST OFFICE BOX 250
APEX, NORTH CAROLINA 27502
PHONE 919-249-3426

**PUBLIC NOTIFICATION**
**OF PUBLIC HEARINGS**
**CONDITIONAL ZONING #20CZ14**
**Hackney PUD**

Pursuant to the provisions of North Carolina General Statutes §160A-364 and to the Town of Apex Unified Development Ordinance (UDO) Section 2.2.11, notice is hereby given of public hearings before the Town Council of the Town of Apex. The purpose of these hearings is to consider the following:

**Applicant:** WithersRavenel
**Authorized Agent:** Brendie Vega, WithersRavenel
**Property Addresses:** 0, 2500, & 2600 Olive Chapel Road
**Acreage:** ±79.79 acres
**Property Identification Numbers (PINs):** 0721492629, 0722406699, & 0722411102
**2045 Land Use Map Designation:** Medium Density Residential
**Existing Zoning of Properties:** Rural Residential (RR) & R-80W
**Proposed Zoning of Properties:** Planned Unit Development-Conditional Zoning (PUD-CZ)

**Public Hearing Location:** Apex Town Hall
Council Chambers, 2nd Floor
73 Hunter Street, Apex, North Carolina

***Comments received prior to or during the Planning Board public hearing will not be read during the Town Council public hearing. Separate comments must be provided for the two public hearings in the time frames specified below.***

**Town Council Public Hearing Date and Time: March 23, 2021 6:00 PM**

You may attend the meeting in person or view the meeting through the Town's YouTube livestream at: https://www.youtube.com/c/townofapexgov.

If you are unable to attend, you may provide comments no sooner than Friday, March 5, 2021 at noon but no later than noon on Monday, March 22, 2021 by email (public.hearing@apexnc.org, 350-word limit) or voicemail (919-362-7300, 3-minute limit) according to the Remote Participation Policy at: http://www.apexnc.org/DocumentCenter/View/31397/. You must provide your name and address for the record. These comments will be read during the Town Council meeting.

If the Council meeting is held with at least one member attending virtually, the vote on the subject of this public hearing will be delayed per State law to allow for comments to be submitted between publication of any required notice and 24 hours after the public hearing. Comments must be provided according to the means specified above. This item will be then be scheduled for the next Town Council meeting. Please note that at this subsequent meeting, Town Council may choose to vote on the item, table the discussion to a later date, or take other action which would delay Council action to another time.

**Vicinity Map:**




Property owners within 300 feet of the proposed conditional zoning have been sent this notice via first class mail. All interested parties may submit comments with respect to the application by the means specified above. In addition to the above map, the location of the property may be viewed online at https://maps.raleighnc.gov/imaps. The 2045 Land Use Map may be viewed online at www.apexnc.org/DocumentCenter/View/478. You may call 919-249-3426, Department of Planning and Community Development, with questions or for further information. To view the petition and related documents on-line: https://www.apexnc.org/DocumentCenter/View/33875.

Dianne F. Khin, AICP
Director of Planning and Community Development

**Published Dates: February 26-March 23, 2021**

1 / 1



Type here to search
10:45 AM
2/26/2021

http://www.apexnc.org/DocumentCenter/View/34685/TC-only-Hybrid-Public-Notice-20CZ14-Hackney-PUD?bidId=
Search...
Legal Notice of Public Hearing...
apexnc.org
apexnc.org
File Edit Go to Favorites Help

**TOWN OF APEX**
POST OFFICE BOX 250
APEX, NORTH CAROLINA 27502
PHONE 919-249-3426

**REVISED PUBLIC NOTIFICATION OF PUBLIC HEARINGS**
**CONDITIONAL ZONING #20CZ14**
**Hackney PUD**

Pursuant to the provisions of North Carolina General Statutes §160A-364 and to the Town of Apex Unified Development Ordinance (UDO) Section 2.2.11, notice is hereby given of public hearings before the Town Council of the Town of Apex. The purpose of these hearings is to consider the following:

**Applicant:** WithersRavenel
**Authorized Agent:** Brendie Vega, WithersRavenel
**Property Addresses:** 0, 2500, & 2600 Olive Chapel Road
**Acreage:** ±79.79 acres
**Property Identification Numbers (PINs):** 0721492629, 0722406699, & 0722411102
**2045 Land Use Map Designation:** Medium Density Residential
**Existing Zoning of Properties:** Rural Residential (RR) & R-80W
**Proposed Zoning of Properties:** Planned Unit Development-Conditional Zoning (PUD-CZ)

**Public Hearing Location:** ~~Apex Town Hall~~
~~Council Chambers, 2nd Floor~~
~~73 Hunter Street, Apex, North Carolina~~

***Comments received prior to or during the Planning Board public hearing will not be read during the Town Council public hearing. Separate comments must be provided for the two public hearings in the time frames specified below.***

**Town Council Remote Public Hearing Date and Time: March 23, 2021 6:00 PM**

You may ~~attend the meeting in person~~ or view the meeting through the Town's YouTube livestream at: https://www.youtube.com/c/townofapexgov.

~~If you are unable to attend,~~ You may provide comments no sooner than Friday, March 5, 2021 at noon but no later than noon on Monday, March 22, 2021 by email (public.hearing@apexnc.org, 350-word limit) or voicemail (919-362-7300, 3-minute limit) according to the Remote Participation Policy at: http://www.apexnc.org/DocumentCenter/View/31397/. You must provide your name and address for the record. These comments will be read during the Town Council meeting.

~~If the Council meeting is held with at least one member attending virtually,~~ The vote on the subject of this public hearing will be delayed per State law to allow for comments to be submitted between publication of any required notice and 24 hours after the public hearing. Comments must be provided according to the means specified above. This item will then be scheduled for the next Town Council meeting on Thursday, March 25, 2021 at 9:00 am. Please note that at this subsequent meeting, Town Council may choose to vote on the item, table the discussion to a later date, or take other action which would delay Council action to another time.

**Vicinity Map:**




Property owners within 300 feet of the proposed conditional zoning have been sent this notice via first class mail. All interested parties may submit comments with respect to the application by the means specified above. In addition to the above map, the location of the property may be viewed online at https://maps.raleighnc.gov/imaps. The 2045 Land Use Map may be viewed online at www.apexnc.org/DocumentCenter/View/478. You may call 919-249-3426, Department of Planning and Community Development, with questions or for further information. To view the petition and related documents on-line: https://www.apexnc.org/DocumentCenter/View/33875.

Dianne F. Khin, AICP
Director of Planning and Community Development

Published Dates: ~~February 26~~ March 16~~March~~ 23, 2021

1 / 1



10:51 AM
3/16/2021

**TOWN OF APEX**
POST OFFICE BOX 250
APEX, NORTH CAROLINA 27502
PHONE 919-249-3426

# PUBLIC NOTIFICATION OF PUBLIC HEARINGS

CONDITIONAL ZONING #20CZ14
Hackney PUD

Pursuant to the provisions of North Carolina General Statutes §160A-364 and to the Town of Apex Unified Development Ordinance (UDO) Section 2.2.11, notice is hereby given of public hearings before the Town Council of the Town of Apex. The purpose of these hearings is to consider the following:

**Applicant:** WithersRavenel
**Authorized Agent:** Brendie Vega, WithersRavenel
**Property Addresses:** 0, 2500, & 2600 Olive Chapel Road
**Acreage:** ±79.79 acres
**Property Identification Numbers (PINs):** 0721492629, 0722406699, & 0722411102
**2045 Land Use Map Designation:** Medium Density Residential
**Existing Zoning of Properties:** Rural Residential (RR) & R-80W
**Proposed Zoning of Properties:** Planned Unit Development-Conditional Zoning (PUD-CZ)

**Public Hearing Location:** Apex Town Hall
Council Chambers, 2nd Floor
73 Hunter Street, Apex, North Carolina

***Comments received prior to or during the Planning Board public hearing will not be read during the Town Council public hearing. Separate comments must be provided for the two public hearings in the time frames specified below.***

**Town Council Public Hearing Date and Time: March 23, 2021 6:00 PM**

You may attend the meeting in person or view the meeting through the Town's YouTube livestream at: https://www.youtube.com/c/townofapexgov.

If you are unable to attend, you may provide comments no sooner than Friday, March 5, 2021 at noon but no later than noon on Monday, March 22, 2021 by email (public.hearing@apexnc.org, 350-word limit) or voicemail (919-362-7300, 3-minute limit) according to the Remote Participation Policy at: http://www.apexnc.org/DocumentCenter/View/31397/. You must provide your name and address for the record. These comments will be read during the Town Council meeting.

If the Council meeting is held with at least one member attending virtually, the vote on the subject of this public hearing will be delayed per State law to allow for comments to be submitted between publication of any required notice and 24 hours after the public hearing. Comments must be provided according to the means specified above. This item will be then be scheduled for the next Town Council meeting. Please note that at this subsequent meeting, Town Council may choose to vote on the item, table the discussion to a later date, or take other action which would delay Council action to another time.

**Vicinity Map:**




Property owners within 300 feet of the proposed conditional zoning have been sent this notice via first class mail. All interested parties may submit comments with respect to the application by the means specified above. In addition to the above map, the location of the property may be viewed online at https://maps.raleighnc.gov/imaps. The 2045 Land Use Map may be viewed online at www.apexnc.org/DocumentCenter/View/478. You may call 919-249-3426, Department of Planning and Community Development, with questions or for further information. To view the petition and related documents on-line: https://www.apexnc.org/DocumentCenter/View/33875.

Dianne F. Khin, AICP
Director of Planning and Community Development

Published Dates: February 26-March 23, 2021

**TOWN OF APEX**
POST OFFICE BOX 250
APEX, NORTH CAROLINA 27502
PHONE 919-249-3426

# PUBLIC NOTIFICATION OF PUBLIC HEARINGS

CONDITIONAL ZONING #20CZ14
Hackney PUD

Pursuant to the provisions of North Carolina General Statutes §160A-364 and to the Town of Apex Unified Development Ordinance (UDO) Section 2.2.11, notice is hereby given of public hearings before the Planning Board of the Town of Apex. The purpose of these hearings is to consider the following:

**Applicant:** WithersRavenel
**Authorized Agent:** Brendie Vega, WithersRavenel
**Property Addresses:** 0, 2500, & 2600 Olive Chapel Road
**Acreage:** ±79.79 acres
**Property Identification Numbers (PINs):** 0721492629, 0722406699, & 0722411102
**2045 Land Use Map Designation:** Medium Density Residential
**Existing Zoning of Properties:** Rural Residential (RR) & R-80W
**Proposed Zoning of Properties:** Planned Unit Development-Conditional Zoning (PUD-CZ)

**Public Hearing Location:** Apex Town Hall
Council Chambers, 2nd Floor
73 Hunter Street, Apex, North Carolina

**Planning Board Public Hearing Date and Time: March 8, 2021 4:30 PM**

If you would like to speak during the public hearing, you may sign-in ahead of time by emailing your name and address to bonnie.brock@apexnc.org. You may attend the meeting in person or view the meeting through the Town's YouTube livestream at: https://www.youtube.com/c/townofapexgov.

If you are unable to attend, you may provide comments no later than noon on Friday, March 5, 2021 by email (public.hearing@apexnc.org, 350-word limit) or voicemail (919-362-7300, 3-minute limit) according to the Remote Participation Policy at: http://www.apexnc.org/DocumentCenter/View/31397/. You must provide your name and address for the record. These comments will be read during the Planning Board meeting.

**A separate notice of the Town Council public hearing on this project will be mailed and posted in order to comply with State public notice requirements.**

**Vicinity Map:**




Property owners within 300 feet of the proposed conditional zoning have been sent this notice via first class mail. All interested parties may submit comments with respect to the application by the means specified above. In addition to the above map, the location of the property may be viewed online at https://maps.raleighnc.gov/imaps. The 2045 Land Use Map may be viewed online at www.apexnc.org/DocumentCenter/View/478. You may call 919-249-3426, Department of Planning and Community Development, with questions or for further information. To view the petition and related documents on-line: https://www.apexnc.org/DocumentCenter/View/33875.

Dianne F. Khin, AICP
Director of Planning and Community Development

Published Dates: February 23-March 8, 2021

**TOWN OF APEX**
POST OFFICE BOX 250
APEX, NORTH CAROLINA 27502
PHONE 919-249-3426

# REVISED PUBLIC NOTIFICATION OF PUBLIC HEARINGS

CONDITIONAL ZONING #20CZ14
Hackney PUD

Pursuant to the provisions of North Carolina General Statutes §160A-364 and to the Town of Apex Unified Development Ordinance (UDO) Section 2.2.11, notice is hereby given of public hearings before the Town Council of the Town of Apex. The purpose of these hearings is to consider the following:

**Applicant:** WithersRavenel
**Authorized Agent:** Brendie Vega, WithersRavenel
**Property Addresses:** 0, 2500, & 2600 Olive Chapel Road
**Acreage:** ±79.79 acres
**Property Identification Numbers (PINs):** 0721492629, 0722406699, & 0722411102
**2045 Land Use Map Designation:** Medium Density Residential
**Existing Zoning of Properties:** Rural Residential (RR) & R-80W
**Proposed Zoning of Properties:** Planned Unit Development-Conditional Zoning (PUD-CZ)

**Public Hearing Location:** ~~Apex Town Hall~~
~~Council Chambers, 2nd Floor~~
~~73 Hunter Street, Apex, North Carolina~~

***Comments received prior to or during the Planning Board public hearing will not be read during the Town Council public hearing. Separate comments must be provided for the two public hearings in the time frames specified below.***

**Town Council Remote Public Hearing Date and Time: March 23, 2021 6:00 PM**

You may ~~attend the meeting in person~~ or view the meeting through the Town's YouTube livestream at: https://www.youtube.com/c/townofapexgov.

~~If you are unable to attend~~, ~~y~~You may provide comments no sooner than Friday, March 5, 2021 at noon but no later than noon on Monday, March 22, 2021 by email (public.hearing@apexnc.org, 350-word limit) or voicemail (919-362-7300, 3-minute limit) according to the Remote Participation Policy at: http://www.apexnc.org/DocumentCenter/View/31397/. You must provide your name and address for the record. These comments will be read during the Town Council meeting.

~~If the Council meeting is held with at least one member attending virtually~~, ~~t~~The vote on the subject of this public hearing will be delayed per State law to allow for comments to be submitted between publication of any required notice and 24 hours after the public hearing. Comments must be provided according to the means specified above. This item will then be scheduled for the next Town Council meeting on Thursday, March 25, 2021 at 9:00 am. Please note that at this subsequent meeting, Town Council may choose to vote on the item, table the discussion to a later date, or take other action which would delay Council action to another time.

**Vicinity Map:**




Property owners within 300 feet of the proposed conditional zoning have been sent this notice via first class mail. All interested parties may submit comments with respect to the application by the means specified above. In addition to the above map, the location of the property may be viewed online at https://maps.raleighnc.gov/imaps. The 2045 Land Use Map may be viewed online at www.apexnc.org/DocumentCenter/View/478. You may call 919-249-3426, Department of Planning and Community Development, with questions or for further information. To view the petition and related documents on-line: https://www.apexnc.org/DocumentCenter/View/33875.

Dianne F. Khin, AICP
Director of Planning and Community Development

Published Dates: ~~February 26~~ March 16-March 23, 2021

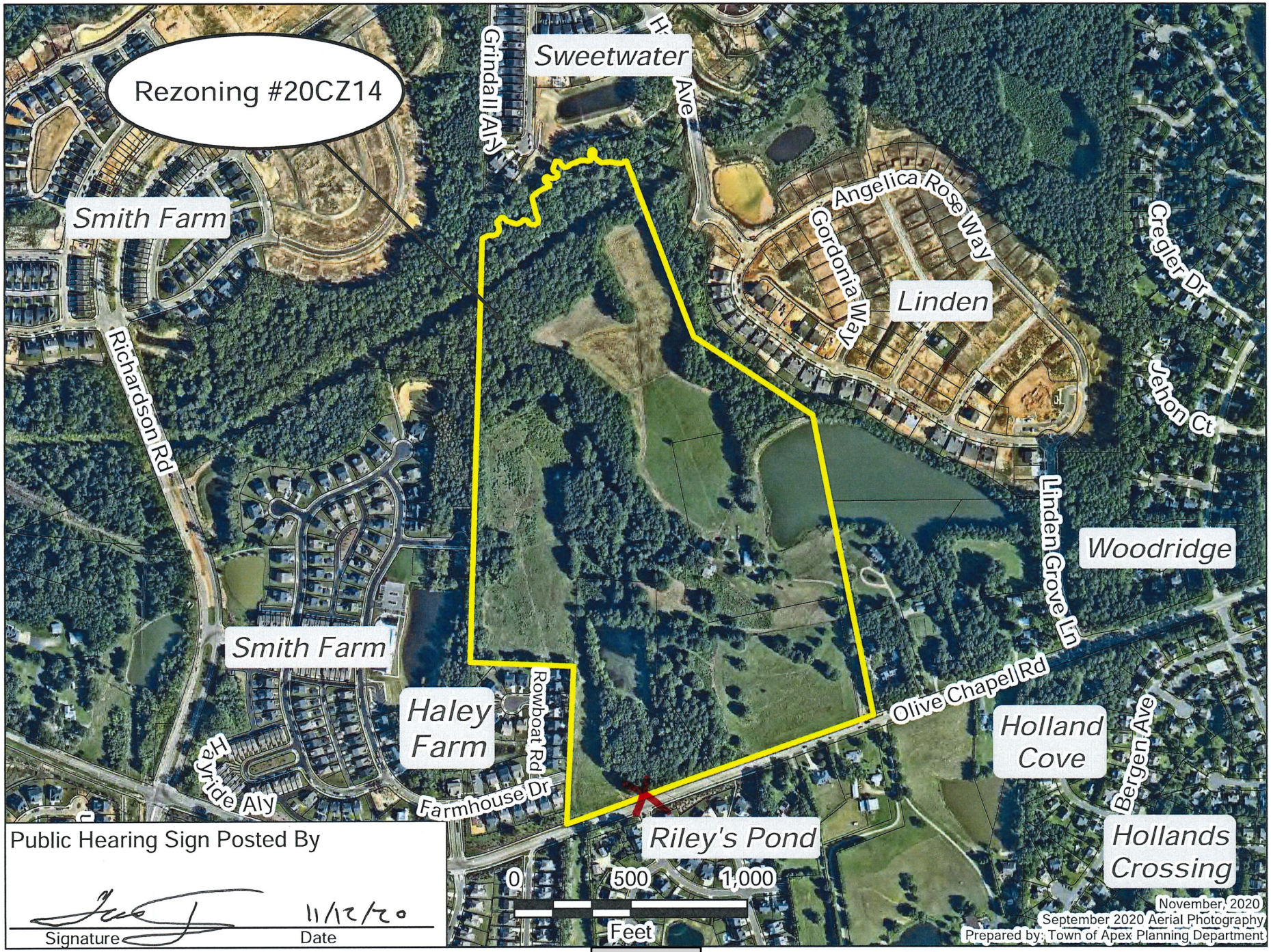


Public Hearing Sign Posted By

11/12/20

Signature Date

**TOWN OF APEX**
POST OFFICE BOX 250
APEX, NORTH CAROLINA 27502
PHONE 919-249-3426

## AFFIDAVIT CERTIFYING
## Public Notification – Written (Mailed) Notice

Section 2.2.11
Town of Apex Unified Development Ordinance

| | |
|---|---|
| Project Name: | Conditional Zoning #20CZ14<br>Hackney PUD |
| Project Location: | 0, 2500, & 2600 Olive Chapel Road |
| Applicant or Authorized Agent: | Brendie Vega, WithersRavenel |
| Firm: | WithersRavenel |

This is to certify that I, as Director of Planning and Community Development, mailed or caused to have mailed by first class postage for the above mentioned project on February 26, 2021, a notice containing the time and place, location, nature and scope of the application, where additional information may be obtained, and the opportunity for interested parties to be heard, to the property owners within 300' of the land subject to notification. I further certify that I relied on information provided to me by the above-mentioned person as to accuracy and mailing addresses of property owners within 300' of the land subject to notification.

2-26-2021
Date

Liz Loftin for Dianne Khin
Director of Planning & Community Development

---

STATE OF NORTH CAROLINA
COUNTY OF WAKE

Sworn and subscribed before me, Jeri Chastain Pederson, a Notary Public for the above State and County, this the 26 day of February, 2021.

JERI CHASTAIN PEDERSON
Notary Public
Wake County, North Carolina
My Commission Expires
SEAL March 10, 2024

Jeri Chastain Pederson
Notary Public

My Commission Expires: 3/10/2024

**TOWN OF APEX**
POST OFFICE BOX 250
APEX, NORTH CAROLINA 27502
PHONE 919-249-3426

## AFFIDAVIT CERTIFYING
## Public Notification – Written (Mailed) Notice

Section 2.2.11
Town of Apex Unified Development Ordinance

| | |
|---|---|
| Project Name: | Conditional Zoning #20CZ14<br>Hackney PUD |
| Project Location: | 0, 2500, & 2600 Olive Chapel Road |
| Applicant or Authorized Agent: | Brendie Vega, WithersRavenel |
| Firm: | WithersRavenel |

This is to certify that I, as Director of Planning and Community Development, mailed or caused to have mailed by first class postage for the above mentioned project on February 23, 2021, a notice containing the time and place, location, nature and scope of the application, where additional information may be obtained, and the opportunity for interested parties to be heard, to the property owners within 300' of the land subject to notification. I further certify that I relied on information provided to me by the above-mentioned person as to accuracy and mailing addresses of property owners within 300' of the land subject to notification.

2-23-2021
Date

Liz Loftin for Dianne Khin
Director of Planning & Community Development

---

STATE OF NORTH CAROLINA
COUNTY OF WAKE

Sworn and subscribed before me, Jeri Chastain Pederson, a Notary Public for the above State and County, this the 23 day of February, 2021.

JERI CHASTAIN PEDERSON
Notary Public
Wake County, North Carolina
My Commission Expires
March 10, 2024

Jeri Chastain Pederson
Notary Public

My Commission Expires: 3/10/2024

**WAKE COUNTY**
**PUBLIC SCHOOL SYSTEM**

**Student Assignment**
**Glenn Carrozza**
5625 Dillard Drive
Cary, NC 27518

tel: (919) 431-7333
fax: (919) 694-7753

February 17, 2021

Dianne Khin, AICP
Director, Department of Planning and Community Development
Town of Apex
Dianne.Khin@apexnc.org

Dear Dianne,
The Wake County Public School System (WCPSS) Office of School Assignment received information about a proposed rezoning/development within the Town of Apex planning area. We are providing this letter to share information about WCPSS's capacity related to the proposal. The following information about the proposed rezoning/development was provided through the Wake County Residential Development Notification database:

- Date of application: November 2, 2020
- Name of development: 20CZ14 Hackney Tracts PUD
- Address of rezoning/development: 0, 2500, & 2600 Olive Chapel Rd
- Total number of proposed residential units: 319
- Type(s) of residential units proposed: Single-family; townhouse; townhouse, detached; accessory apartment

Based on the information received at the time of application, the Office of School Assignment is providing the following assessment of possible impacts to the Wake County Public School System:

☐ Schools at all grade levels within the current assignment area for the proposed rezoning/development are anticipated to have sufficient capacity for future students.

☒ Schools at the following grade levels within the current assignment area for the proposed rezoning/development are anticipated to have insufficient capacity for future students; transportation to schools outside of the current assignment area should be anticipated:

☒ Elementary ☐ Middle ☒ High

The following mitigation of capacity concerns due to school construction or expansion is anticipated:

☐ Not applicable – existing school capacity is anticipated to be sufficient.

☐ School expansion or construction within the next five years is not anticipated to address concerns.

☒ School expansion or construction within the next five years may address concerns at these grade levels:

☐ Elementary ☐ Middle ☒ High

Thank you for sharing this information with the Town of Apex Planning Board and Town Council as they consider the proposed rezoning/development.

Sincerely,

Glenn Carrozza

Glenn Carrozza

**ORDINANCE AMENDING THE OFFICIAL ZONING DISTRICT MAP OF THE TOWN OF APEX TO CHANGE THE ZONING OF APPROXIMATELY 79.79 ACRES LOCATED ON 0, 2500, 2600 OLIVE CHAPEL ROAD FROM RURAL RESIDENTIAL (RR) AND R-80W TO PLANNED UNIT DEVELOPMENT CONDITIONAL ZONING**

**#20CZ14**

**WHEREAS**, the application of Brendie Vega, WithersRavenel petitioner, for the rezoning of lands hereinafter described was duly filed with the office of the Planning Director and thereafter a public hearing was held hereon on the 8th day of March 2020 before the Planning Board. Thereafter, the Planning Board submitted its final report to the Town Council recommending approval of said application for the rezoning of the lands hereinafter described, all in accordance with the requirements of the Town of Apex Unified Development Ordinance and the provisions of Chapter 160A, Article 19, of the North Carolina General Statutes. A public hearing was held on the 23rd day of March 2021, before the Town Council. All public hearings were held pursuant to due notice mailed and published pursuant to G.S. § 160A-384; **NOW, THEREFORE,**

**BE IT ORDAINED BY THE TOWN COUNCIL OF THE TOWN OF APEX**

**Section 1**: The lands that are the subject of the Ordinance are those certain lands described in Attachment "A" – Legal Description which is incorporated herein by reference, and said lands are hereafter referred to as the "Rezoned Lands."

**Section 2**: The Town of Apex Unified Development Ordinance, including the Town of Apex North Carolina Official Zoning District Map which is a part of said Ordinance, is hereby amended by changing the zoning classification of the "Rezoned Lands" from Rural Residential (RR) and R-80W to Planned Unit Development-Conditional Zoning (PUD-CZ) District, subject to the conditions stated herein.

**Section 3:** The Planning Director is hereby authorized and directed to cause the said Official Zoning District Map for the Town of Apex, North Carolina, to be physically revised and amended to reflect the zoning changes ordained by this Ordinance.

**Section 4:** The "Rezoned Lands" are subject to the conditions in Attachment "B" Hackney Tract PUD which are imposed as part of this rezoning.

**Section 5:** The "Rezoned Lands" shall be perpetually bound to the conditions imposed including the uses authorized, unless subsequently changed or amended as provided for in the Unified Development Ordinance. Site plans for any development to be made pursuant to this amendment to the Official Zoning District Map shall be submitted for site plan approval as provided for in the Unified Development Ordinance.

**Section 6:** This ordinance shall be in full force and effect from and after its adoption.

Motion by Council Member_____

Seconded by Council Member_____

With ____ Council Member(s) voting "aye."
With ____ Council Member(s) voting "no."

This the _____ day of _____ 2021.

**TOWN OF APEX**

_____
Mayor

**ATTEST:**

_____
Town Clerk

**APPROVED AS TO FORM:**

_____
Town Attorney

Legal description for Tract 1 Hackney Property

Beginning at an Existing Iron Pipe located at the Southwest corner of Lot 1, "William E. Gerringer Subdivision", Recorded at Map Book 1982, Page 24, Wake County Registry. Said Existing Iron Pipe having North Carolina Geodetic Coordinates (NAD 83, 2011) N: 719,823.90', E: 2,025,316.49' Said point is also located on the Northern Margin of Olive Chapel Road, Thence, following the Northern Margin of Olive Chapel Road; South 70°32'42" West, 65.39 feet to a point, said point being the **True Point of Beginning.** Thence, following the Northern Margin of Olive Chapel Road, South 70°31'17" West, 649.92 feet to a point, Thence, Leaving Said Road, North 34°12'20" West, 445.67 feet to a point; Thence, North 00°58'41" West, 436.43 feet to a point; Thence, North 85°35'51" West, 339.02 feet to an Existing Iron Pipe; Thence, South 02°31'45" West, 382.15 feet to an Existing Iron Pipe; Thence, North 87°46'36" West, 443.92 feet to an Existing Iron Pipe; Thence, North 01°42'56" East, 1,191.60 feet to an Existing Iron Pipe; Thence, North 01°42'19" East, 635.94 feet to a point located in the centerline of a creek, Said point being located South 01°42'19" West, 8.02 feet from an Existing Iron Pipe found on the North bank of the creek; Thence, along the centerline of the creek the following seventy-eight (78) calls:
North 62°12'20" East, 26.95 feet to a point; Thence, North 85°25'51" East, 12.16 feet to a point; Thence, South 89°25'18" East, 9.95 feet to a point; Thence, North 72°42'15" East, 16.28 feet to a point; Thence, North 35°12'38" East, 17.29 feet to a point; Thence, North 04°12'00" East, 12.96 feet to a point; Thence, North 21°34'14" West, 18.72 feet to a point; Thence, North 09°03'47" West, 8.16 feet to a point, Thence, North 41°28'27" East, 26.53 feet to a point, Thence, South 84°15'14" East, 11.15 feet to a point, Thence, South 44°43'11" East, 19.83 feet to a point, Thence, South 71°15'05" East, 13.95 feet to a point, Thence, South 74°11'34" East, 15.85 feet to a point, Thence, South 74°44'51" East, 12.72 feet to a point, Thence, South 83°49'13" East, 3.99 feet to a point, Thence, North 64°08'10" East, 16.34 feet to a point, Thence, North 47°07'30" East, 15.60 feet to a point, Thence, South 78°20'55" East, 15.26 feet to a point, Thence, South 56°02'16" East, 5.33 feet to a point, Thence, South 19°19'09" East, 6.90 feet to a point, Thence, South 56°44'29" East, 12.49 feet to a point, Thence, South 83°31'01" East, 16.05 feet to a point, Thence, North 59°49'27" East, 15.58 feet to a point, Thence, North 16°43'28" East, 6.92 feet to a point, Thence, North 01°57'42" West, 8.52 feet to a point, Thence, North 19°34'33" West, 8.53 feet to a point, Thence, North 22°27'53" West, 25.52 feet to a point, Thence, North 08°13'00" West, 17.60 feet to a point, Thence, North 13°08'01" West, 25.39 feet to a point, Thence, North 19°34'33" West, 12.83 feet to a point, Thence, North 00°51'00" East, 8.68 feet to a point, Thence, North 37°09'53" East, 11.70 feet to a point, Thence, North 49°22'35" East, 26.46 feet to a point, Thence, North 62°21'20" East, 30.37 feet to a point, Thence, North 67°46'29" East, 19.95 feet to a point, Thence, North 02°19'02" West, 8.02 feet to a point, Thence, North 48°37'20" West, 9.79 feet to a point, Thence, North 51°28'51" West, 14.82 feet to a point, Thence, North 10°18'42" West, 10.15 feet to a point, Thence, North 29°53'30" East, 7.06 feet to a point, Thence, North 67°41'49" East, 9.59 feet to a point, Thence, South 56°14'07" East, 5.77 feet to a point, Thence, South 63°24'14" East, 9.29 feet to a point, Thence, South 76°41'34" East, 9.25 feet to a point, Thence, North 77°10'45" East, 14.30 feet to a point, Thence, North 49°00'07" East, 13.34 feet to a point, Thence, North 10°50'19" West, 12.26 feet to a point, Thence, North 64°58'17" West, 15.90 feet to a point, Thence, North 31°59'29" West, 7.02 feet to a point, Thence, North 01°03'18" West, 7.87 feet to a point, Thence, North 17°34'16" East, 24.60 feet to a point, Thence, North 26°59'18" East, 8.17 feet to a point, Thence, South 81°51'44" East, 16.60 feet to a point, Thence, South 33°48'00" East, 15.96 feet to a point, Thence, South 49°25'00" East, 16.68 feet to a point, Thence, North 78°59'30" East, 12.42 feet to a point, Thence, North 50°28'53" East, 20.42 feet to a point, Thence, North 70°44'43" East, 46.11 feet to a point, Thence, South 89°01'57" East, 16.84 feet to a point, Thence, South 73°56'31" East, 11.76 feet to a point, Thence, North 66°33'30" East, 13.41 feet to a point, Thence, North 10°20'58" East, 8.36 feet to a point, Thence, North 17°44'49" West, 19.09 feet to a point, Thence, North 07°53'24" East, 12.39 feet to a point, Thence, North 59°58'19" East, 13.53 feet to a point, Thence, South 42°16'28" East, 13.69 feet to

a point, Thence, South 04°17'52" West, 12.70 feet to a point, Thence, South 10°35'03" West, 9.31 feet to a point, Thence, South 32°25'41" East, 5.70 feet to a point, Thence, South 46°46'35" East, 17.73 feet to a point, Thence, South 60°06'25" East, 16.74 feet to a point, Thence, North 86°29'56" East, 19.64 feet to a point, Thence, North 81°25'49" East, 16.54 feet to a point, Thence, South 80°06'27" East, 29.38 feet to a point, Thence, South 84°39'29" East, 22.26 feet to a point, Thence, North 58°33'23" East, 13.24 feet to a point, Thence, North 74°43'49" East, 8.91 feet to a point, Thence, leaving the centerline of said creek, South 20°58'05" East, 22.05 feet to a point, Thence, South 20°45'12" East, 790.03 feet to an Existing Iron Pipe, Thence, South 56°33'25" East, 611.03 feet to an Existing Iron Pipe, Thence, South 78°41'14" West, 615.50 feet to a point, Thence, South 11°18'46" East, 791.04 feet to a point, Thence, North 78°41'14" East, 566.96 feet to a point, Thence, South 09°38'52" East, 536.92 feet to a point, being the **True Point of Beginning**, and having an area of 51.280 Acres, more or less.

**Together with the following area located within the public right of way of Olive Chapel Road**

Beginning at an Existing Iron Pipe located at the Southwest corner of Lot 1, "William E. Gerringer Subdivision", Recorded at Map Book 1982, Page 24, Wake County Registry. Said Existing Iron Pipe having North Carolina Geodetic Coordinates (NAD 83, 2011) N: 719,823.90', E: 2,025,316.49' Said point is also located on the Northern Margin of Olive Chapel Road, Thence, following the Northern Margin of Olive Chapel Road; South 70°32'42" West, 65.39 feet to a point, said point being the **True Point of Beginning.** Thence, South 70°29'55" West, 636.77 feet to a point; Thence, North 34°12'20" West, 31.27 feet to a point; Thence, North 70°31'17" East, 649.92 feet to a point; Thence, South 09°38'52" East, 30.43 feet to a point; being the **True Point of Beginning**, and having an area of 0.445 Acres (19,375 sf), more or less.

Legal description for Tract 2 Hackney Property

Beginning at an Existing Iron Pipe located at the Southwest corner of Lot 1, "William E. Gerringer Subdivision", Recorded at Map Book 1982, Page 24, Wake County Registry. Said Existing Iron Pipe having North Carolina Geodetic Coordinates (NAD 83, 2011) N: 719,823.90', E: 2,025,316.49' Said point is also located on the Northern Margin of Olive Chapel Road, Thence, following the Northern Margin of Olive Chapel Road; South 70°32'42" West, 65.39 feet to a point; Thence, South 70°31'17" West, 649.92 feet to a point, said point being the **True Point of Beginning.**
Thence, following the Northern Margin of Olive Chapel Road, South 70°19'56" West, 682.58 feet to a New Iron Pipe, Thence, Leaving Said Right of Way, Thence, North 02°31'13" East, 5.41 feet to an Existing Iron Pipe; Thence, North 02°31'13" East, 674.17 feet to an Existing Iron Pipe; Thence, North 02°31'45" East, 382.15 feet to an Existing Iron Pipe; Thence, South 85°35'51" East, 339.02 feet to a point, Thence, South 00°58'41" East, 436.43 feet to a point; Thence, South 34°12'20" East, 445.67 feet to a point, being the **True Point of Beginning**, and having an area of 9.526 Acres, more or less.

**Together with the following area located within the public right of way of Olive Chapel Road**

Beginning at an Existing Iron Pipe located at the Southwest corner of Lot 1, "William E. Gerringer Subdivision", Recorded at Map Book 1982, Page 24, Wake County Registry. Said Existing Iron Pipe having North Carolina Geodetic Coordinates (NAD 83, 2011) N: 719,823.90', E: 2,025,316.49' Said point is also located on the Northern Margin of Olive Chapel Road, Thence, following the Northern Margin of Olive Chapel Road; South 70°32'42" West, 65.39 feet to a point; Thence, South 70°31'17" West, 649.92 feet to a point, said point being the **True Point of Beginning.**
Thence, South 34°12'20" East, 31.27 feet to a point; Thence, South 70°19'56" West, 702.77 feet to a point; Thence, North 02°31'13" East, 32.69 feet to a New Iron Pipe; Thence, North 70°19'56" East, 682.58 feet to a point; being the **True Point of Beginning**, and having an area of 0.481 Acres (20,967 sf), more or less.

Legal description for Tract 3 Hackney Property

**Beginning** at an Existing Iron Pipe located at the Southwest corner of Lot 1, "William E. Gerringer Subdivision", Recorded at Map Book 1982, Page 24, Wake County Registry. Said Existing Iron Pipe having North Carolina Geodetic Coordinates (NAD 83, 2011) N: 719,823.90', E: 2,025,316.49' Said point is also located on the Northern Margin of Olive Chapel Road, Thence, following the Northern Margin of Olive Chapel Road; South 70°32'42" West, 65.39 feet to a point; Thence, Leaving said Right of Way, North 09°38'52" West, 536.92 feet to a point; Thence, South 78°41'14" West, 566.96 feet to a point; Thence, North 11°18'46" West, 791.04 feet to a point; Thence, North 78°41'14" East, 615.50 feet to an Existing Iron Pipe; Thence, South 11°18'46" East, 500.58 feet to an Existing Iron Pipe; Thence, South 11°21'53" East, 392.29 feet to an Existing Iron Pipe; Thence, South 11°20'41" East, 425.59 feet to an Existing Iron Pipe, being the Point of **Beginning**, and having an area of 11.871 Acres, more or less.

**Together with the following area located within the public right of way of Olive Chapel Road**

**Beginning** at an Existing Iron Pipe located at the Southwest corner of Lot 1, "William E. Gerringer Subdivision", Recorded at Map Book 1982, Page 24, Wake County Registry. Said Existing Iron Pipe having North Carolina Geodetic Coordinates (NAD 83, 2011) N: 719,823.90', E: 2,025,316.49' Said point is also located on the Northern Margin of Olive Chapel Road; Thence, South 11°20'41" East, 30.29 feet to a point; Thence, South 70°32'42" West, 66.30 feet to a point; Thence, North 09°38'52" West, 30.43 feet to a point; Thence, North 70°32'42" East, 65.39 feet to an Existing Iron Pipe, being the Point of Beginning, and having an area of 0.045 acres (1,975 sf), more or less.

"Attachment B"

# PD PLAN

# Hackney Planned Unit Development

## APEX, NORTH CAROLINA

## APPLICANT

WithersRavenel
137 S Wilmington Street Suite 200
Raleigh, NC 27601

## Date: March 2, 2021

WithersRavenel
Our People. Your Success.

# TABLE OF CONTENTS

## CONTENTS


1.0 Vicinity Map ..... 3
2.0 Project Data ..... 4
3.0 Proposed List of Uses ..... 5
4.0 Purpose Statement ..... 5
5.0 Proposed Design and Architectural Controls ..... 6
6.0 Buffers ..... 7
7.0 Natural Resources and Environment ..... 8
8.0 Stormwater Management Requirements ..... 10
9.0 Parks, Recreation and Cultural Resources ..... 11
10.0 Parking and Loading ..... 11
11.0 Signage ..... 11
12.0 Public Facilities Requirements ..... 11
13.0 Phasing Plan ..... 13
14.0 Consistency with 2045 Land Use Plan ..... 14
15.0 Consistency with Unified Development Ordinance ..... 14
16.0 Elevations ..... 14
17.0 Affordable Housing ..... 14

## 1.0 VICINITY MAP

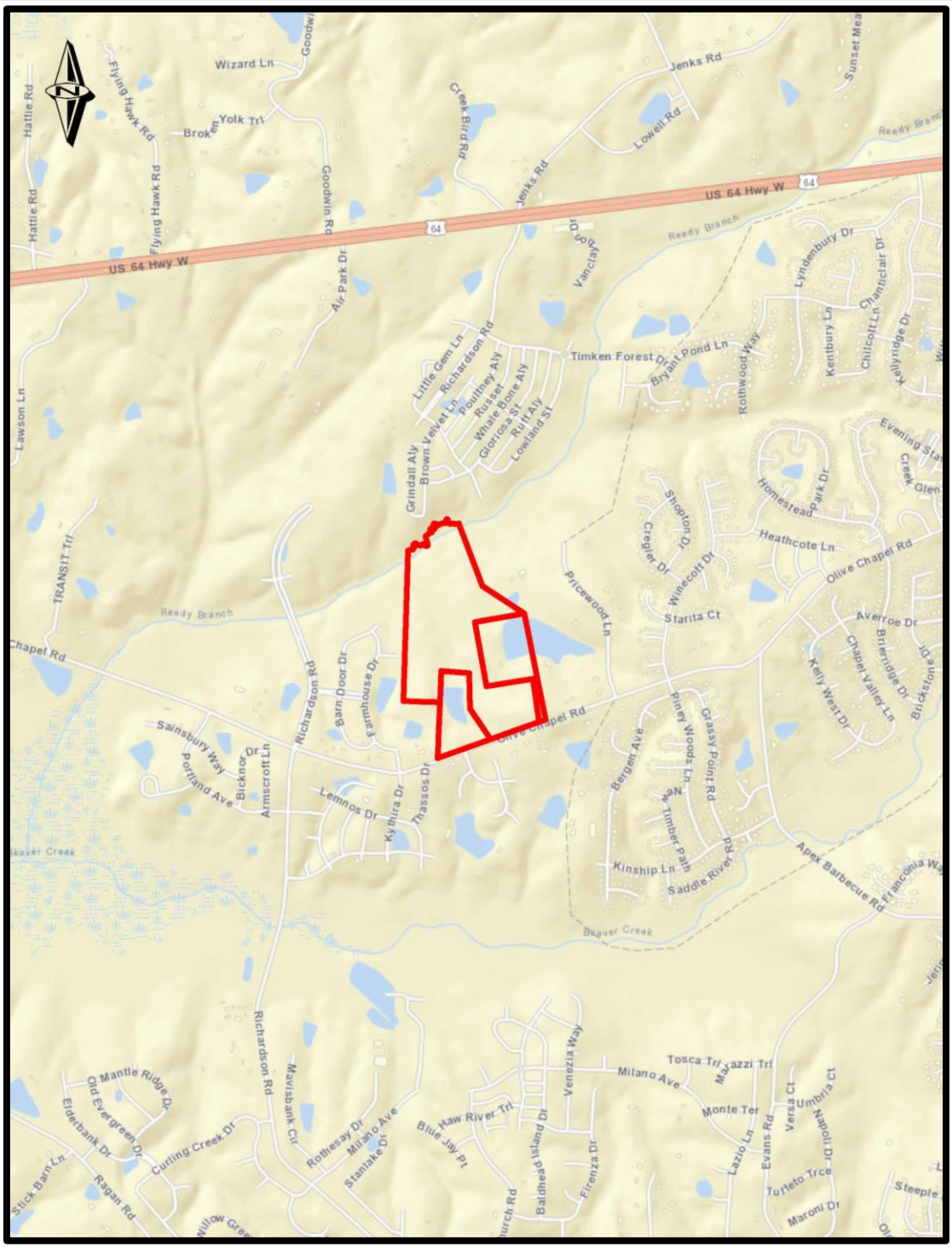


Project Parcels: Not to Scale

## 2.0 PROJECT DATA

| | | |
|---|---|---|
| Name of Project | Hackney Planned Unit Development | |
| PIN(s) | 0721492629<br>0722406699<br>0722411102 | |
| Preparer/Owner Information | Prepared by | WithersRavenel<br>137 S. Wilmington Street, Suite 200<br>Raleigh, NC 27601<br>Phone: 919.469.3340<br>Fax: 919.467.6008<br>Email:<br>Brendie Vega, AICP, CNU-A<br>bvega@withersravenel.com<br>Bryant Inge, PE<br>binge@withersravenel.com |
| | Owners | Hackney, Charles Leon<br>Hackney, Judy G<br>Goodwin, Edwin A<br>2505 Olive Chapel Rd<br>Apex, NC 27502-6788 |
| Current Zoning Designation | Rural Residential (RR) & Residential-80W (R-80W) | |
| Proposed Zoning Designation | Planned Unit Development (PUD-CZ) | |
| Current 2045 Land Use Map Designation | Medium Density Residential | |
| Proposed 2045 Land Use Map Designation | No Proposed Change (Medium Density) | |
| Area of Tracts (ac.) | 10.01, 11.91, & 57.87 (79.79 ac. total) | |

## 3.0 PROPOSED LIST OF USES

The Rezoned Lands may be used for, and only for, the uses listed immediately below. The permitted uses are subject to the limitations and regulations stated in the UDO and any additional limitations or regulations stated below. For convenience, some relevant sections of the UDO may be referenced; such references do not imply that other sections of the UDO do not apply.

**Residential**

- Single-Family
- Accessory Dwelling Unit
- Townhouse

**Non-Residential**

- Utility, Minor
- Greenway
- Park, Active
- Park, Passive

## 4.0 PURPOSE STATEMENT

The Hackney Planned Unit Development Conceptual Layout has been designed in order to help establish appropriately sized residential opportunities along Olive Chapel Road. Development is intended to reflect the neighboring residential communities in both density and product. This residential development philosophy is in line with the 2045 Apex Future Land Use Plan designation of “Medium Density Residential”. The site will provide a mixture of amenities and strategic infrastructure connections for future residents to navigate the community.

## 5.0 PROPOSED DESIGN AND ARCHITECTURAL CONTROLS

| | | | |
|---|---|---|---|
| Maximum Densities (du/Acre) | 4.0 du/acre | | |
| Maximum Height of Buildings | 50 feet | | |
| Setbacks: Single-Family | Front:<br>5' from façade<br>20' from garage to back of sidewalk | Side: 5'<br>Corner Side: 8' | Rear: 10' |
| Setbacks: Townhouse, Front loaded | Front:<br>10' from façade<br>20' from garage to back of sidewalk | Side: 5'<br>Building to Building: 10' | Rear: 10' |
| Setbacks: Townhouse, Alley loaded | Front:<br>10' from façade | Side: 5'<br>Building to Building: 10' | Rear: 5' |
| Amount and Percentage of Built Upon Area Allowed | 70% | | |
| Amount and Percentage of Proposed Built Upon Area (Max) | 70% | | |

1. Vinyl siding is not permitted; however, vinyl windows, decorative elements and trim are permitted.
2. The roofline cannot be a single mass; it must be broken up horizontally and vertically between every unit.
3. Garage doors must have windows, decorative details or carriage-style adornments on them.
4. The rear and side elevations of the units that can be seen from the right-of-way shall have trim around the windows.

5. The visible side of a townhome on a corner lot facing the public street shall contain at least 2 decorative elements such as, but not limited to, the following elements:

- Windows
- Bay window
- Recessed window
- Decorative window
- Trim around the windows
- Wrap-around porch or side porch
- Two or more building materials
- Decorative brick/stone
- Decorative trim
- Decorative shake
- Decorative air vents on gables
- Decorative gable
- Decorative cornice
- Column
- Portico
- Balcony
- Dormer

6. The garage cannot protrude more than 1-foot from either the front façade or porch.

## 6.0 BUFFERS

Perimeter Buffers shall be designated as such:

| | |
|---|---|
| North | 100' Stream Buffer |
| East | 20' Type A Buffer |
| South | 30' Type E Buffer* |
| West | 20' Type A Buffer |

*A 30' Type B Buffer shall be provided if homes along Olive Chapel Road are not alley-loaded.

## 7.0 NATURAL RESOURCES AND ENVIRONMENT

**Watershed**

The Hackney Planned Unit Development is located within the Primary Watershed Protection Overlay District and is therefore subject to the requirements outlined in Section 6.1 of the Town of Apex Unified Development Ordinance.

**Floodplain**

The parcels that make up the Site do contain a small portion of FEMA designated 100-year floodplains near the site s northern termination according to FEMA FIRM Panel 3720072200J, effective 05/02/2006.

**Resource Conservation**

The Site is also subject to the Resource Conservation Area requirements outlined in the Town of Apex Unified Development Ordinance.

The PUD will meet the requirements of:

8.1.2.C.1 *Planned Developments*. The RCA for all planned developments shall be determined by the Town Council per Sec. 2.3.4.F.1.c and per Sec. 8.1.2.C.4, 5, 6, 7, or 10 as applicable.

8.1.2.C.4 *Development located south and west of NC 540*. All developments which do not meet the criteria of subsections 8.1.2.C.3 or 10 and which are located south and west of NC 540 shall provide buffers and RCA equal to or greater than 30% of the gross site acreage for single-family and townhome uses and 25% of the gross site acreage for multi-family, mixed-use, and non-residential uses.

Per UDO Section 7.2.5.B.8, if any mass grading is proposed in the single-family sections of the PUD, the following provision will apply to lot coverage area for single-family: An additional five percent (5%) Resource Conservation Area (RCA) shall be set aside. This requirement is added to the standard RCA percentage requirement found in Sec. 8.1.2.C Size of the RCA.

**Tree Replanting**

Existing deciduous trees greater than 18" in diameter (DBH), as identified in the tree survey, that are removed by site development shall be replaced by planting a 1.5" caliper native tree from the Town of Apex Design and Development Manual as a street tree or as other required landscaping. Excess required tree replacement will occur in common open space areas.

**Clean Energy**

Residential dwelling units will be provided with solar conduit to accommodate the future installation of solar panels.

**Water Quality**

Signs will be installed near SCMs in order to:

1. Reduce pet waste near SCM drainage areas.
2. Reduce fertilizer near SCM drainage areas.

Installation of Pet Waste Stations in common areas will occur within the neighborhood.

**Planting and Landscaping**

Install Warm Season grasses (Bermuda, Zoysia, etc) in lawn areas to reduce the need for irrigation and chemicals.

Install required Street Trees, Buffer and Re-Vegetation plantings that consist of a variety of native plant materials recognized by the New Hope Audubon Society or the NCSU manual for Landscaping for Wildlife with Native Plants as being bird and pollinator friendly; as allowed by the Town of Apex Design & Development Manual or approved by Apex Staff.

Specify pocket park plantings that are recognized by the NC Wildlife Federation as being Native Pollinator Plants as part of the Statewide Butterfly Highway initiative.

Include at least 4 native hardwood tree varieties in the proposed plantings, as allowed by the Apex Design and Development Manual.

**Environmental Resources**

The site will provide the following:

1. Purchase 20 bird houses from the New Hope Audubon Society (or other non-profit) and install in natural areas within the site.
2. Retain the 2 existing ponds if engineering studies confirm that the existing dams are structurally sound and meet regulatory requirements.

**Historic Preservation**

According to the North Carolina Historic Preservation Office s HPOWEB 2.0 Mapping application, there are no historic structures contained on the Site.

## 8.0 STORMWATER MANAGEMENT REQUIREMENTS

The parcels on which the development is proposed upon currently consist of a few existing structures, some cleared lands, and wooded lands. Two ponds exist on the parcels and drain to Reedy Branch Creek, eventually feeding into Jordan Lake. The proposed development plan will require stormwater management measures in accordance with Sections 6.1 and 7.5.7 in the Town of Apex Unified Development Ordinance. Stormwater captured on the site will be conveyed to proposed Stormwater Control Measures, which will be identified on plans during the major subdivision or site plan approval stage. Post-development peak runoff shall not exceed pre-development peak runoff for the 24-hour, 1-year and 10-year storm events in accordance with the Unified Development Ordinance. Treatment for the first 1-inch of runoff will be provided such that the removal of 85% Total Suspended Solids is achieved. All stormwater devices will meet the design requirements of NCDENR and the Town of Apex.

## 9.0 PARKS, RECREATION AND CULTURAL RESOURCES

The Apex Parks, Recreation and Cultural Resources Advisory Commission met on December 9, 2020 and unanimously recommended a fee-in-lieu of dedication with credit for construction of greenway which connects Sidepath along Hasse Ave to the west connecting to the Reedy Branch Greenway in Smith Farm. The fee rate will be set at the time of Town Council Review/ Approval and the credit for construction will be calculated prior to construction plan approval. Per the UDO Art 14, the greenway must be completed and accepted prior to 25% of the building permits for the project being issued.

## 10.0 PARKING AND LOADING

All parking provided on the Site will comply with the requirements outlined in Section 8.3 of the Town of Apex Unified Development Ordinance. Per 8.3.4(C) of the UDO, guest parking shall be designated within common areas and be distributed throughout residential projects. Striped on-street parking may be counted toward guest parking requirements. For Townhouse, guest parking shall be distributed so that there is at least one parking space within 200' of each townhouse lot.

## 11.0 SIGNAGE

All signage on the Site will comply with the requirements outlined in Section 8.7 of the Town of Apex Unified Development Ordinance.

## 12.0 PUBLIC FACILITIES REQUIREMENTS

**All utilities shall meet the Town of Apex Master Utility Maps.**

**Sanitary Sewer Service**

All on-site sanitary sewer lines will be extended to the property lines to allow future interconnectivity of properties. The design of the sanitary sewer will be according to the Town of Apex Engineering Standards and Specifications while accounting for downstream capacity and future upstream development. Sanitary Sewer easements will be established for public sewer outside of the Public R/W.

**Gas**

The Public Service Company of North Carolina (PSNC) will require a revenue analysis based on the proposed development in order to determine the applicable costs to the developer for installation of infrastructure.

**Electric Service**

The Site is in the service area of both the Town of Apex Electric Utilities and Progress Energy and the applicant will select the Town of Apex to serve as the electric provider.

**Roadways**

The Site will require an internal public roadway network and parking spaces. The onsite transportation circulation system shall be consistent with the Town of Apex Transportation Plan and the Town of Apex Standard Specifications and Standard Details and show required right-of-way widths and road sections.

Hasse Avenue will be constructed between Olive Chapel Road and its current terminus north of the project. Olive Chapel Road will be widened to include construction of a 100-foot eastbound left-turn lane with appropriate deceleration length and taper and a 100-foot westbound right-turn lane with appropriate deceleration length and taper subject to NCDOT review and approval. The Olive Chapel Road turn lane widening will be completed prior to platting Hasse Avenue access to Olive Chapel Road and the connection to Hasse Avenue north of the project will be completed prior to the last plat in the subdivision.

A 6-foot bike lane and 5-foot paved shoulder will be located on the north side of Olive Chapel Road per the bike/ped systems map.

Per the Long-Range Transportation Map, the following roadway sections apply to this development:

- Olive Chapel Road = 4-Lane with median, widening, 110' ROW, must provide 55' from centerline
- N/S = Future Major Collector, 60' ROW
- E/W = Future Local Connection, 50' ROW

**Water Service**

All on-site water lines will be designed according to Town of Apex Engineering Standards and Specifications.

**Transit**

According to the Apex 2045 Transportation Plan, there are no existing or proposed transit routes designated on or adjacent to the Site.

**Pedestrian Facilities**

The development plan will incorporate sidewalk infrastructure along Olive Chapel Road as well as the internal street network. A trail will serve as a connection from the western portion of the community to the Reedy Branch Greenway, thus in compliance with the future land use plan.

Sidewalks will be provided on both sides of all streets for single-family detached homes.

There will be a 10-foot side path provided along minor collector roads as show on the bike/ped plan.

## 13.0 PHASING PLAN

The Hackney Planned Unit Development will be constructed in phases according to economic considerations and infrastructure requirements.

Please note the following considerations for the phasing plan:

1. Access points are preliminary in nature and subject to Town of Apex and NCDOT review and approval.
2. Limits of land disturbance within each phase shall be determined at the master subdivision plan and site plan stages.
3. Public utilities shall be provided for each phase of development.

## 14.0 CONSISTENCY WITH 2045 LAND USE PLAN

The Apex 2045 Future Land Use Map depicts the future land use of the three parcels as Medium Density Residential. Medium Density Residential lands are described in the Land Use Plan as consisting of single-family homes, duplexes, and townhomes with densities between three (3) and seven (7) dwelling units per acre. It is intended to act as a transition between higher and lower residential densities. The maximum density proposed for the Hackney Planned Unit Development is four (4) dwelling units per acre.

The Hackney Planned Unit Development proposes medium density residential housing options appropriate to its proximity to the Olive Chapel Road thoroughfare and are consistent with uses found in the surrounding communities. The uses proposed for the site are directly in line with the uses stated in the 2045 Future Apex Land Use Plan thus the proposed rezoning is consistent with the Town's future plans for this area.

## 15.0 CONSISTENCY WITH UNIFIED DEVELOPMENT ORDINANCE

The proposed development is consistent with all applicable requirements of the Town of Apex Unified Development Ordinance.

## 16.0 ELEVATIONS

Elevations provided are representative of architecture, materials, and housing types. Final elevations submitted at Major Subdivision Plan will meet the requirements of the Architectural Controls in 5.0 of this PD Plan.

## 17.0 AFFORDABLE HOUSING

If the Town of Apex has a fund or other mechanism in place to receive donations to construct, subsidize, or participate in the development of affordable housing units (the "Fund"), the developer will contribute $215 per lot to this Fund prior to the first residential Certificate of Occupancy. In the event the Fund has not been established by the Town of Apex, the money will be conveyed to a local non-profit working on affordable housing initiatives. The developer will work with the Town of Apex to identify a mutually acceptable local non-profit organization to receive these funds.

# PLANNED UNIT DEVELOPMENT

# HACKNEY

## APEX, NORTH CAROLINA

FEBRUARY 26, 2021

| SITE DATA | | | | | |
|---|---|---|---|---|---|
| 2045 LAND USE PLAN DESIGNATION | CURRENT | MEDIUM DENSITY RESIDENTIAL | | | |
| | PROPOSED | NO CHANGE | | | |
| ZONING | CURRENT | RURAL RESIDENTIAL (RR) (R-80W) | | | |
| | PROPOSED | PLANNED UNIT DEVELOPMENT (PUD-CZ) | | | |
| AREA OF TRACTS IN PROPOSED PUD | 0722-41-1102 | 57.87 ACRES | | | |
| | 0721-49-2629 | 10.01 ACRES | | | |
| | 0722-40-6699 | 11.91 ACRES | | | |
| | TOTAL: | 79.79 ACRES | | | |
| AREA DESIGNATED AS MIXED-USE ON 2045 LAND USE MAP | 0 ACRES | | | | |
| AREA OF MIXED-USE PROPERTY PROPOSED AS NON-RESIDENTIAL DEVELOPMENT | N/A | | | | |
| PERCENT OF MIXED-USE PROPERTY PROPOSED AS NON-RESIDENTIAL DEVELOPMENT | N/A | | | | |
| REQUESTED SEWER CAPACITY | TO BE DETERMINED | | | | |
| MAXIMUM RESIDENTIAL DENSITY | 4.0 DU/ACRE | | | | |
| MAXIMUM BUILDING HEIGHT | 50'-0" | | | | |
| SETBACKS: SINGLE FAMILY | FRONT: 5 FT FROM FACADE<br>20 FT FROM GARAGE TO BACK OF SIDEWALK | | REAR: 10 FT | SIDE: 5 FT | CORNER SIDE: 8 FT |
| SETBACKS: TOWNHOUSE, FRONT LOADED | FRONT: 10 FT FROM FACADE<br>20 FT FROM GARAGE TO BACK OF SIDEWALK | | REAR: 10 FT | SIDE: 5 FT | BUILDING TO BUILDING: 10 FT |
| SETBACKS: TOWNHOUSE, ALLEY LOADED | FRONT: 10 FT FROM FACADE | | REAR: 5 FT | SIDE: 5 FT | BUILDING TO BUILDING: 10 FT |
| WATERSHED | JORDAN LAKE WATERSHED, PRIMARY WATERSHED PROTECTION OVERLAY | | | | |
| HISTORIC STRUCTURES | N/A | | | | |
| COMMUNITY AMENITIES | COMMUNITY GATHERING SPACE WITH BENCHES, TOT LOT | | | | |
| SITE BUFFERS | NORTH | 100' STREAM BUFFER | | | |
| | EAST | 20' TYPE A BUFFER | | | |
| | SOUTH | 30' TYPE E BUFFER<br>*A 30' TYPE B BUFFER SHALL BE PROVIDED IF HOMES ALONG OLIVE CHAPEL ROAD ARE NOT ALLEY LOADED | | | |
| | WEST | 20' TYPE A BUFFER | | | |

THE APEX PARKS, RECREATION AND CULTURAL RESOURCES ADVISORY COMMISSION MET ON DECEMBER 9, 2020 AND UNANIMOUSLY RECOMMENDED A FEE-IN-LIEU OF DEDICATION WITH CREDIT FOR CONSTRUCTION OF GREENWAY WHICH CONNECTS SIDEPATH ALONG HASSE AVE TO THE WEST CONNECTING TO THE REEDY BRANCH GREENWAY IN SMITH FARM. THE FEE RATE WILL BE SET AT THE TIME OF TOWN COUNCIL REVIEW/APPROVAL AND THE CREDIT FOR CONSTRUCTION WILL BE CALCULATED PRIOR TO CONSTRUCTION PLAN APPROVAL. PER THE UDO ART 14, THE GREENWAY MUST BE COMPLETED AND ACCEPTED PRIOR TO 25% OF THE BUILDING PERMITS FOR THE PROJECT BEING ISSUED.

HASSE AVENUE WILL BE CONSTRUCTED BETWEEN OLIVE CHAPEL ROAD AND ITS CURRENT TERMINUS NORTH OF THE PROJECT. OLIVE CHAPEL ROAD WILL BE WIDENED TO INCLUDE CONSTRUCTION OF A 100-FOOT EASTBOUND LEFT-TURN LANE WITH APPROPRIATE DECELERATION LENGTH AND TAPER AND A 100-FOOT WESTBOUND RIGHT-TURN LANE WITH APPROPRIATE DECELERATION LENGTH AND TAPER SUBJECT TO NCDOT REVIEW AND APPROVAL. THE OLIVE CHAPEL ROAD TURN LANE WIDENING WILL BE COMPLETED PRIOR TO PLATTING HASSE AVENUE ACCESS TO OLIVE CHAPEL ROAD AND THE CONNECTION TO HASSE AVENUE NORTH OF THE PROJECT WILL BE COMPLETED PRIOR TO THE LAST PLAT IN THE SUBDIVISION.

SITE MAP
1"=500'

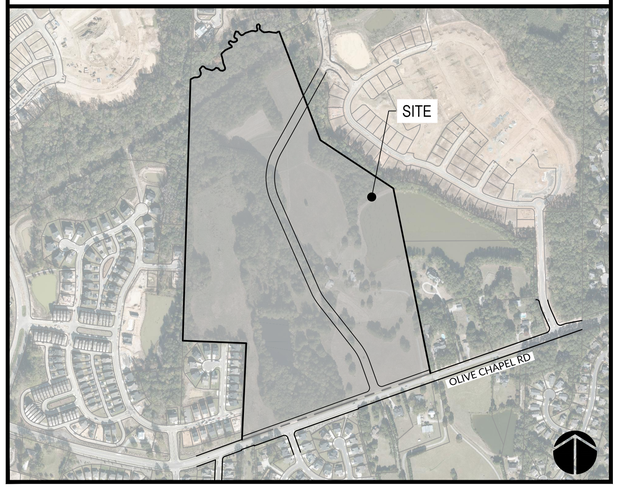


VICINITY MAP
1"=2000'




| INDEX OF SHEETS | |
|---|---|
| SHEET NUMBER | SHEET TITLE |
| 0.0 | COVER |
| 1.0 | EXISTING CONDITIONS |
| 2.0 | CONCEPTUAL LAYOUT PLAN |
| 3.0 | CONCEPTUAL UTILITY PLAN |
| 4.0 | CONCEPTUAL STORMWATER MANAGEMENT PLAN |


PREPARED BY:

WithersRavenel
Engineers | Planners | Surveyors

115 MacKenan Drive | Cary, NC 27511 | t: 919.469.3340 | license #: C-0832 | www.withersravenel.com

PLANNER: BRENDIE VEGA, AICP
BVEGA@WITHERSRAVENEL.COM

CIVIL ENGINEER: BRYANT INGE, PE
BINGE@WITHERSRAVENEL.COM


PRELIMINARY
NOT APPROVED FOR CONSTRUCTION



K:\18\18-0010\180517.20--Hackney Tract--Apex\CAD\Drawing Sets\PUD\0.0 COVER.dwg, Friday, February 26, 2021 10:29:14 AM -- INGE, BRYANT

EXISTING CONDITION NOTES:

1. TOPOGRAPHIC AND UTILITY INFORMATION BASED ON AVAILABLE GIS MAPPING. PRELIMINARY BOUNDARY SURVEY PREPARED BY WITHERSRAVENEL DATED 09/25/20.
2. WETLAND/STREAM INFORMATION BASED ON EVALUATION BY S&EC DATED 09/18/20 (APEX 20-004).
3. REGULATORY FEMA MAPPED FLOODPLAINS EXIST ON SITE PER FIRM MAP #3720072200J (5/2/06).
4. THE SUBJECT PROPERTY IS LOCATED WITHIN THE TOWN OF APEX PRIMARY WATERSHED PROTECTION OVERLAY DISTRICT.
5. ALL EXISTING STRUCTURES ON THE SUBJECT PROPERTY SHALL BE REMOVED PER TOWN OF APEX STANDARDS AND REQUIREMENTS.

CRESCENT APEX, LLC
DB 17044, PG 924
RCA 1
LINDEN SUBDIVISION
BM 2019, PG 1364 & 1366
PIN No. 0722512006

MICHAEL BASS
SHERRIE BASS
DB 14367, PG 1240
LOT 3
"WILLIAM E. GERRINGER"
BM 1982, PG 24
PIN No. 0722503445

ELIZABETH PERKINS
DB 14268, PG 331
LOT 1
"WILLIAM E. GERRINGER"
BM 1982, PG 24
PIN No. 0722503152

CRESCENT APEX, LLC
DB 17044, PG 924
RCA 6
LINDEN SUBDIVISION
BM 2020, PG 1334
PIN No. 0722424038

HASSE AVE
60' R/W

CRESCENT APEX, LLC
DB 17044, PG 924 RCA 1
LINDEN SUBDIVISION
BM 2019, PG 1364 & 1366
PIN No. 0722512006

CRESCENT APEX, LLC
DB 17044, PG 924
RCA 1
LINDEN SUBDIVISION
BM 2019, PG 1364 & 1366
PIN No. 0722512006

S 11°18'46" E
300.58

S 11°21'53" E
392.29

S 11°20'41" E
425.99

N 09°38'52" W
538.92

S 20°45'12" E
790.03

S 85°49'04" E
67.18

N 78°41'44" E
90.50

50' BUFFER

EXISTING POND

GRAVEL DRIVE

S 78°41'44" W
306.86

TRACT 3
PIN No. 0722406699
CHARLES L. HACKNEY
JUDY G. HACKNEY
DB 3195, PG 151
BM 1982, PG 1057
11.871 ACRES (OUTSIDE R/W)
0.045 ACRES (WITHIN R/W)
11.916 (TOTAL ACRES)

SHED
SHED
ONE STORY FRAME RESIDENCE
#2500 OLIVE CHAPEL RD
BARN
BARN

N 11°18'46" W
797.04

S 87°11'17" W
406.26

OLIVE CHAPEL ROAD
(SR 1160)
VARIABLE WIDTH R/W

40' UTILITY AND PIPELINE EASEMENT
DB 14343, PG 2028

EXISTING 1% ANNUAL FLOOD ZONE (ZONE AE)

N 01°36'11" E
2872.71' (TIE LINE)

APPROXIMATE 100' BUFFER

N 01°42'16" E
643.96' TO C/L CREEK
643.96' TO EIP

LENNAR CAROLINAS, LLC
DB 16720, PG 1045
TRACT 3
"BOUNDARY SURVEY"
BM 2017, PG 379
PIN No. 0722229350

LENNAR CAROLINAS, LLC
DB 16720, PG 1045
TRACT 3
"BOUNDARY SURVEY"
BM 2017, PG 379
PIN No. 0722229350

FLOODWAY (OUT)

FLOODWAY (IN)

EXISTING WETLANDS

50' BUFFER

C/L OF STREAM

TRACT 1
PIN No. 0722411102
JUDY G. HACKNEY
DB 1400, PG 236
BM 1983, PG 57
51.28 ACRES (OUTSIDE R/W)
0.445 ACRES (WITHIN R/W)
51.725 (TOTAL ACRES)

EXISTING WETLANDS

S 80°58'41" E
436.47

S 24°47'28" E
445.61

S 82°33'11" E
300.00

TRACT 2
PIN No. 0721492629
EDWIN A. GOODWIN
DB 3195, PG 149 BM 1983, PG 57
9.526 ACRES (OUTSIDE R/W)
0.481 ACRES (WITHIN R/W)
10.007 (TOTAL ACRES)

EXISTING POND

RILEYS POND DRIVE
50' R/W

S 11°15'56" W
682.56

N 02°31'45" E
382.15

PORTION OF PROPERTY TO BE ANNEXED

TOWN OF APEX ELECTRIC UTILITY EASEMENT PER DB 13318, PG 1911

ROWBOAT ROAD
50' R/W

N 02°31'45" E
224.17

N 87°28'05" W
49.99

LENNAR CAROLINAS, LLC
DB 16720, PG 1062
"RCA AREA"
SMITH FARM PUD, PH 1
BM 2018, PG 924
PIN No. 0722219077

N 01°42'16" E
1151.65'

LENNAR CAROLINAS, LLC
DB 16720, PG 1062
"RCA AREA"
SMITH FARM PUD, PH 1
BM 2018, PG 923
PIN No. 0722219077

WATER TOWER LANE
50' R/W

LENNAR CAROLINAS, LLC
DB 16720, PG 1062
"FUTURE REC SITE"
SMITH FARM PUD, PH 1
BM 2018, PG 922 & 923
PIN No. 0722303175

SMITH FARMS OF APEX HOMEOWNERS ASSOCIATION, INC.
DB 17177, PG 741
COMMON AREA 1
HALEY AT SMITH FARMS
BM 2018, PG 934
PIN No. 0721396548

SMITH FARMS OF APEX HOMEOWNERS ASSOCIATION, INC
DB 17177, PG 741
COMMON AREA 3
HALEY AT SMITH FARMS
BM 2018, PG 934
PIN No. 0722309093

FARMHOUSE DRIVE
50' R/W

SMITH FARMS OF APEX HOMEOWNERS ASSOCIATION, INC.
DB 17177, PG 741
COMMON AREA 2
HALEY AT SMITH FARMS
BM 2018, PG 934
PIN NO. 0721397362

THASSOS DRIVE
50' R/W

PRELIMINARY
NOT APPROVED FOR CONSTRUCTION

TREE LEGEND

- OAK
- POPLAR
- GUM
- MAPLE
- CEDAR
- PINE

EXISTING DECIDUOUS TREES TO BE REMOVED (>18" DBH)

| TYPE | QUANTITY |
|---|---|
| OAK | 46 |
| POPLAR | 22 |
| GUM | 17 |
| MAPLE | 5 |
| TOTAL | 90 |

GRAPHIC SCALE
100 0 50 100 200
1 inch = 100 ft.

| No. | Revision | Date | By |
|---|---|---|---|
| | | | |

| | |
|---|---|
| Designer: WR | Scale: 1" = 100' |
| Drawn By: WR | Date: 02/26/2021 |
| Checked By: WR | Job No.: 02180517.20 |

# HACKNEY

APEX — WAKE COUNTY — NORTH CAROLINA

# EXISTING CONDITIONS

WithersRavenel
Engineers | Planners | Surveyors
115 MacKenan Drive | Cary, NC 27511 | t: 919.469.3340 | license #: C-0832 | www.withersravenel.com

Sheet No. 1.0



K:\181\6\05\180727.20\Hackney Tract\Apex\CAD\Drawing Set\PLOT\ 0 EXISTING CONDITIONS.dwg, Friday, February 26, 2021 10:30:02 AM, INGE.BRYANT

NOTES:

1. PLAN SHEETS ARE INTENDED FOR ILLUSTRATIVE USE ONLY.
2. PER 2.3.4(F)(1)(A)(IV) OF THE UDO, SIDEWALKS MUST BE PROVIDED ON BOTH SIDES OF ALL STREETS FOR SINGLE-FAMILY DETACHED HOMES IN PUD-CZ DEVELOPMENT DISTRICTS.
3. PER 2.3.4(F)(1)(F)(I) OF THE UDO, THE PD PLAN FOR PUD-CZ SHALL DEMONSTRATE A SAFE AND ADEQUATE ON-SITE TRANSPORTATION CIRCULATION SYSTEM. THE ON-SITE TRANSPORTATION CIRCULATION SYSTEM SHALL BE INTEGRATED WITH THE OFF-SITE TRANSPORTATION CIRCULATION SYSTEM OF THE TOWN. THE PD PLAN FOR PUD-CZ SHALL BE CONSISTENT WITH THE APEX TRANSPORTATION PLAN AND THE TOWN OF APEX STANDARD SPECIFICATIONS AND STANDARD DETAILS AND SHOW REQUIRED RIGHT-OF-WAY WIDTHS AND ROAD SECTIONS.
4. PER UDO SECTION 7.2.5.B.8, IF ANY MASS GRADING IS PROPOSED IN THE SINGLE-FAMILY SECTIONS OF THE PUD, THE FOLLOWING PROVISION WILL APPLY TO LOT COVERAGE AREA FOR SINGLE-FAMILY: AN ADDITIONAL FIVE PERCENT (5%) RESOURCE CONSERVATION AREA (RCA) SHALL BE SET ASIDE. THIS REQUIREMENT IS ADDED TO THE STANDARD RCA PERCENTAGE REQUIREMENT FOUND IN SEC. 8.1.2.C SIZE OF THE RCA.
5. COLLECTOR ROAD ALIGNMENT LOCATION WILL BE DETERMINED AT THE MAJOR SUBDIVISION PLAN STAGE.
6. EXISTING PONDS WILL BE EVALUATED BY A LICENSED ENGINEER. EVALUATION RECOMMENDATIONS MAY REQUIRE A CHANGE TO SIZE, BOUNDARY OR REMOVAL OF EXISTING PONDS.
7. A 30' TYPE B SHALL BE PROVIDED IF HOMES ALONG OLIVE CHAPEL ROAD ARE NOT ALLEY LOADED.

CRESCENT APEX, LLC
DB 17044, PG 924
RCA 1
LINDEN SUBDIVISION
BM 2019, PG 1364 & 1366
PIN No. 0722512006

MICHAEL BASS
SHERRIE BASS
DB 14367, PG 1240
LOT 3
"WILLIAM E. GERRINGER"
BM 1982, PG 24
PIN No. 0722503445

ELIZABETH PERKINS
DB 14268, PG 331
LOT 1
"WILLIAM E. GERRINGER"
BM 1982, PG 24
PIN No. 0722503152

HASSE AVE
60' R/W

CRESCENT APEX, LLC
DB 17044, PG 924
RCA 6
LINDEN SUBDIVISION
BM 2020, PG 1334
PIN No. 0722424038

CRESCENT APEX, LLC
DB 17044, PG 924 RCA 1
LINDEN SUBDIVISION
BM 2019, PG 1364 & 1366
PIN No. 0722512006

CRESCENT APEX, LLC
DB 17044, PG 924
RCA 1
LINDEN SUBDIVISION
BM 2019, PG 1364 & 1366
PIN No. 0722512006

20' TYPE A

EXISTING POND

50' BUFFER

THE PROPOSED WIDENING ON THE NORTH SIDE OF OLIVE CHAPEL ROAD WILL INCLUDE A 6' BIKE LANE AND 5' PAVED SHOULDER.

THE PROPOSED WIDENING OF OLIVE CHAPEL ROAD WILL COMPLY WITH THE TOWN OF APEX THOROUGHFARE PLAN. THE PROPOSED ROAD SECTION ON THE PROJECT SIDE OF THE CENTERLINE WILL BE A MEDIAN DIVIDED 4-LANE SECTION (110' ROW).

OLIVE CHAPEL ROAD
(SR 1160)
VARIABLE WIDTH R/W

40' UTILITY AND PIPELINE EASEMENT DB 14343, PG 2028

SCM #2

EXISTING 1% ANNUAL FLOOD ZONE (ZONE AE)

30' BUFFER SEE NOTE #7

PROVIDE TRAIL CONNECTION FOR COMMUNITY ACCESS TO REEDY BRANCH GREENWAY

THE PROPOSED COLLECTOR ROAD WILL COMPLY WITH THE TOWN OF APEX THOROUGHFARE PLAN. THE PROPOSED ROAD SECTION WILL BE 60' WIDTH RIGHT-OF-WAY AND INCLUDE A 10' WIDTH SIDE PATH ON ONE SIDE.

LANDSCAPED MEDIAN AT SITE ENTRANCE

EXISTING WETLANDS

50' BUFFER

C/L OF STREAM

SCM #3

EXISTING POND

APPROXIMATE 100' BUFFER

LENNAR CAROLINAS, LLC
DB 16720, PG 1045
TRACT 3
"BOUNDARY SURVEY"
BM 2017, PG 379
PIN No. 0722229350

CONNECTION TO GREENWAY WITHIN SMITH FARM

LENNAR CAROLINAS, LLC
DB 16720, PG 1045
TRACT 3
"BOUNDARY SURVEY"
BM 2017, PG 379
PIN No. 0722229350

EXISTING WETLANDS

30' BUFFER SEE NOTE #7

SCM #1

THE PROPOSED LOCAL CONNECTIONS WILL COMPLY WITH THE TOWN OF APEX THOROUGHFARE PLAN. THE PROPOSED ROAD SECTION WILL BE 50' WIDTH RIGHT-OF-WAY.

THE PROPOSED LOCAL CONNECTIONS WILL COMPLY WITH THE TOWN OF APEX THOROUGHFARE PLAN. THE PROPOSED ROAD SECTION WILL BE 50' WIDTH RIGHT-OF-WAY.

THE PROPOSED LOCAL CONNECTIONS WILL COMPLY WITH THE TOWN OF APEX THOROUGHFARE PLAN. THE PROPOSED ROAD SECTION WILL BE 50' WIDTH RIGHT-OF-WAY.

FLOODWAY (OUT)
(IN)

FLOODWAY (OUT)
(IN)

LENNAR CAROLINAS, LLC
DB 16720, PG 1062
"RCA AREA"
SMITH FARM PUD, PH 1
BM 2018, PG 924
PIN No. 0722219077

20' TYPE A

LENNAR CAROLINAS, LLC
DB 16720, PG 1062
"RCA AREA"
SMITH FARM PUD, PH 1
BM 2018, PG 923
PIN No. 0722219077

LENNAR CAROLINAS, LLC
DB 16720, PG 1062
"FUTURE REC SITE"
SMITH FARM PUD, PH 1
BM 2018, PG 922 & 923
PIN No. 0722303175

ROWBOAT ROAD
50' R/W

WATER TOWER LANE
50' R/W

FARMHOUSE DRIVE
50' R/W

RILEYS POND DRIVE
50' R/W

THASSOS DRIVE
50' R/W

SMITH FARMS OF APEX HOMEOWNERS ASSOCIATION, INC.
DB 17177, PG 741
COMMON AREA 1
HALEY AT SMITH FARMS
BM 2018, PG 934
PIN No. 0721396648

SMITH FARMS OF APEX HOMEOWNERS ASSOCIATION, INC.
DB 17177, PG 741
COMMON AREA 3
HALEY AT SMITH FARMS
BM 2018, PG 934
PIN No. 0722309093

SMITH FARMS OF APEX HOMEOWNERS ASSOCIATION, INC.
DB 17177, PG 741
COMMON AREA 2
HALEY AT SMITH FARMS
BM 2018, PG 934
PIN NO. 0721397362

LEGEND

- RESIDENTIAL
- STREAM
- STREAM BUFFER
- PERIMETER BUFFER
- STREETSCAPE
- EXISTING POND
- S.C.M.
- WETLAND
- ROADWAY CONNECTION
- GREENWAY CONNECTION

GRAPHIC SCALE
100 0 50 100 200
1 inch = 100 ft.

PRELIMINARY
NOT APPROVED FOR CONSTRUCTION

| No. | Revision | Date | By |
|---|---|---|---|
| | | | |

| | |
|---|---|
| Designer: WR | Scale: 1" = 100' |
| Drawn By: WR | Date: 02/26/2021 |
| Checked By: WR | Job No.: 02180517.20 |

# HACKNEY

APEX WAKE COUNTY NORTH CAROLINA

## CONCEPTUAL LAYOUT PLAN

WithersRavenel
Engineers | Planners | Surveyors
115 MacKenan Drive | Cary, NC 27511 | t: 919.469.3340 | license #: C-0832 | www.withersravenel.com

Sheet No. 2.0



K:\180\02180517.20\Hackney Tract\Apex\CAD\Drawing Set\PUD\2.0 CONCEPT LAYOUT PLAN.dwg Friday, February 26, 2021 10:31:12 AM - MIKE_BRYANT

UTILITY NOTES:

1. WATER AND SANITARY SEWER WILL BE OWNED AND MAINTAINED BY THE TOWN OF APEX.
2. FIRE HYDRANTS, VALVES, SERVICES, METERS, AND APPURTENANCES SHALL BE DESIGNED PER THE TOWN OF APEX CONSTRUCTION SPECIFICATIONS AND SHALL BE SHOWN ON THE CONSTRUCTION PLANS.
3. ALL UTILITY EASEMENTS SHALL BE PROVIDED AS NECESSARY. DELINEATION WILL BE DETERMINED WITH FINAL DESIGN OF INTERNAL PUBLIC STREETS AT THE SUBDIVISION PLAN STAGE. MINIMUM UNDISTURBED BUFFER WIDTHS SHALL BE EXCLUSIVE OF UTILITY EASEMENTS UNLESS APPROVED BY THE DIRECTOR OF THE PUBLIC WORKS & UTILITIES DEPARTMENT.
4. THE DEVELOPER WILL ACTIVELY WORK WITH THE TOWN OF APEX TO PRESERVE EXISTING TREES ON SITE. THESE AREAS SHALL INCLUDE REQUIRED LANDSCAPE BUFFERS, RCA AREAS, NON-BUFFERED AND NON-RCA AREAS, AREAS OF PROPOSED UTILITY LINES, AND ADJACENT TO THE SUBJECT PROPERTY, TO THE MAXIMUM EXTENT POSSIBLE.
5. UTILITY LAYOUT FOR WATER AND SEWER IS CONCEPTUAL. FINAL DESIGN WILL BE DETERMINED AT THE SUBDIVISION PLAN STAGE.
6. IN NATURAL DRAINAGE WAYS, SEWER SHALL BE EXTENDED TO THE PROPERTY LINES TO READILY ENABLE FUTURE CONNECTIONS TO ADJOINING PROPERTY. SEWER DESIGN SHALL ACCOUNT FOR FUTURE UPSTREAM DEVELOPMENT BASED ON THE CURRENT LAND USE PLAN, AND SHALL INCLUDE EVALUATION OF EXISTING DOWNSTREAM SEWER CAPACITY.

APPROXIMATE LOCATION OF EXISTING TOWN OF APEX WATERLINE

HASSE AVE 60' R/W

CRESCENT APEX, LLC
DB 17044, PG 924
RCA 6
LINDEN SUBDIVISION
BM 2020, PG 1334
PIN No. 0722424038

CRESCENT APEX, LLC
DB 17044, PG 924 RCA 1
LINDEN SUBDIVISION
BM 2019, PG 1364 & 1366
PIN No. 0722512006

CRESCENT APEX, LLC
DB 17044, PG 924
RCA 1
LINDEN SUBDIVISION
BM 2019, PG 1364 & 1366
PIN No. 0722512006

CRESCENT APEX, LLC
DB 17044, PG 924
RCA 1
LINDEN SUBDIVISION
BM 2019, PG 1364 & 1366
PIN No. 0722512006

MICHAEL BASS
SHERRIE BASS
DB 14367, PG 1240
LOT 3
"WILLIAM E. GERRINGER"
BM 1982, PG 24
PIN No. 0722503445

ELIZABETH PERKINS
DB 14268, PG 331
LOT 1
"WILLIAM E. GERRINGER"
BM 1982, PG 24
PIN No. 0722503152

SEE UTILITY NOTE 6

50' BUFFER

EXISTING POND

SEWER LINE

WATER LINE

40' UTILITY AND PIPELINE EASEMENT DB 14343, PG 2028

EXISTING 1% ANNUAL FLOOD ZONE (ZONE AE)

OLIVE CHAPEL ROAD (SR 1160) VARIABLE WIDTH R/W

APPROXIMATE LOCATION OF EXISTING 12" TOWN OF APEX WATERLINE

EXISTING WETLANDS

50' BUFFER

C/L OF STREAM

EXISTING POND

APPROXIMATE 100' BUFFER

LENNAR CAROLINAS, LLC
DB 16720, PG 1045
TRACT 3
"BOUNDARY SURVEY"
BM 2017, PG 379
PIN No. 0722229350

PROPOSED CONNECTION TO EXISTING MANHOLE

LENNAR CAROLINAS, LLC
DB 16720, PG 1045
TRACT 3
"BOUNDARY SURVEY"
BM 2017, PG 379
PIN No. 0722229350

EXISTING WETLANDS

FLOODWAY (UD)

FLOODWAY (UD)

LENNAR CAROLINAS, LLC
DB 16720, PG 1062
"RCA AREA"
SMITH FARM PUD, PH 1
BM 2018, PG 924
PIN No. 0722219077

LENNAR CAROLINAS, LLC
DB 16720, PG 1062
"RCA AREA"
SMITH FARM PUD, PH 1
BM 2018, PG 923
PIN No. 0722219077

LENNAR CAROLINAS, LLC
DB 16720, PG 1062
"FUTURE REC SITE"
SMITH FARM PUD, PH 1
BM 2018, PG 922 & 923
PIN No. 0722303175

WATER TOWER LANE 50' R/W

SMITH FARMS OF APEX HOMEOWNERS ASSOCIATION, INC.
DB 17177, PG 741
COMMON AREA 1
HALEY AT SMITH FARMS
BM 2018, PG 934
PIN No. 0721396648

ROWBOAT ROAD 50' R/W

SMITH FARMS OF APEX HOMEOWNERS ASSOCIATION, INC.
DB 17177, PG 741
COMMON AREA 3
HALEY AT SMITH FARMS
BM 2018, PG 934
PIN No. 0722309093

TOWN OF APEX ELECTRIC UTILITY EASEMENT PER DB 13318, PG 1911

FARMHOUSE DRIVE 50' R/W

SMITH FARMS OF APEX HOMEOWNERS ASSOCIATION, INC.
DB 17177, PG 741
COMMON AREA 2
HALEY AT SMITH FARMS
BM 2018, PG 934
PIN NO. 0721397362

RILEYS POND DRIVE 50' R/W

THASSOS DRIVE 50' R/W

GRAPHIC SCALE
100 0 50 100 200
1 inch = 100 ft.

PRELIMINARY
NOT APPROVED FOR CONSTRUCTION

| No. | Revision | Date | By |
|---|---|---|---|
| | | | |

| | |
|---|---|
| Designer: WR | Scale: 1" = 100' |
| Drawn By: WR | Date: 02/26/2021 |
| Checked By: WR | Job No.: 02180517.20 |

# HACKNEY

APEX WAKE COUNTY NORTH CAROLINA

# CONCEPTUAL UTILITY PLAN

WithersRavenel
Engineers | Planners | Surveyors
115 MacKenan Drive | Cary, NC 27511 | t: 919.469.3340 | license #: C-0832 | www.withersravenel.com

Sheet No. 3.0



K:\180\02180517.20\Hackney Tract\Apex\CADD\Drawing Sets\PUD\3.0 PRELIMINARY UTILITY PLAN.dwg- Friday, February 26, 2021 10:31:41 AM - INGE.BRYANT

STORMWATER MANAGEMENT NOTES:

1. TOPOGRAPHIC AND UTILITY INFORMATION BASED ON AVAILABLE GIS MAPPING. PRELIMINARY BOUNDARY SURVEY PREPARED BY WITHERSRAVENEL.
2. WETLAND/STREAM INFORMATION BASED ON EVALUATION BY S&EC DATED 09/18/20.
3. REGULATORY FEMA MAPPED FLOODPLAINS EXIST ON SITE PER FIRM MAP #3720072200J (5/2/06).
4. THE SUBJECT PROPERTY IS LOCATED WITHIN THE TOWN OF APEX PRIMARY WATERSHED PROTECTION OVERLAY DISTRICT.
5. STORMWATER MANAGEMENT FACILITIES SHALL BE DESIGNED PER THE TOWN OF APEX STANDARDS AND REGULATIONS FOR STORMWATER QUANTITY AND QUALITY (UDO SECTION 6.1.7 B).
6. ALL APPLICABLE LOCAL AND STATE ENVIRONMENTAL PERMITS SHALL BE OBTAINED PRIOR TO START OF CONSTRUCTION.
7. STORMWATER TREATMENT WILL BE HANDLED BY INDIVIDUAL OR REGIONAL FACILITIES WITHIN THE SUBJECT PROPERTY OR ADJACENT OFF-SITE DRAINAGE EASEMENT.
8. THE POST DEVELOPMENT PEAK FLOW RATE OF ON-SITE STORMWATER WILL NOT EXCEED THE PRE-DEVELOPMENT PEAK FLOW RATE IN ACCORDANCE WITH THE UDO.

CRESCENT APEX, LLC
DB 17044, PG 924
RCA 1
LINDEN SUBDIVISION
BM 2019, PG 1364 & 1366
PIN No. 0722512006

MICHAEL BASS
SHERRIE BASS
DB 14367, PG 1240
LOT 3
"WILLIAM E. GERRINGER"
BM 1982, PG 24
PIN No. 0722503445

ELIZABETH PERKINS
DB 14268, PG 331
LOT 1
"WILLIAM E. GERRINGER"
BM 1982, PG 24
PIN No. 0722503152

HASSE AVE
60' R/W

CRESCENT APEX, LLC
DB 17044, PG 924 RCA 1
LINDEN SUBDIVISION
BM 2019, PG 1364 & 1366
PIN No. 0722512006

CRESCENT APEX, LLC
DB 17044, PG 924
RCA 6
LINDEN SUBDIVISION
BM 2020, PG 1334
PIN No. 0722424038

CRESCENT APEX, LLC
DB 17044, PG 924
RCA 1
LINDEN SUBDIVISION
BM 2019, PG 1364 & 1366
PIN No. 0722512006

EXISTING POND

50' BUFFER

40' UTILITY AND
PIPELINE EASEMENT
DB 14343, PG 2028

SCM #2

EXISTING 1% ANNUAL
FLOOD ZONE
(ZONE AE)

EXISTING
WETLANDS

50' BUFFER

C/L OF STREAM

SCM #3

EXISTING POND

APPROXIMATE
100' BUFFER

LENNAR CAROLINAS, LLC
DB 16720, PG 1045
TRACT 3
"BOUNDARY SURVEY"
BM 2017, PG 379
PIN No. 0722229350

EXISTING
WETLANDS

LENNAR CAROLINAS, LLC
DB 16720, PG 1045
TRACT 3
"BOUNDARY SURVEY"
BM 2017, PG 379
PIN No. 0722229350

FLOODWAY (OUT)
(N)

FLOODWAY (OUT)
(N)

LENNAR CAROLINAS, LLC
DB 16720, PG 1062
"RCA AREA"
SMITH FARM PUD, PH 1
BM 2018, PG 924
PIN No. 0722219077

LENNAR CAROLINAS, LLC
DB 16720, PG 1062
"RCA AREA"
SMITH FARM PUD, PH 1
BM 2018, PG 923
PIN No. 0722219077

SCM #1

ROWBOAT ROAD
50' R/W

WATER
TOWER LANE
50' R/W

LENNAR CAROLINAS, LLC
DB 16720, PG 1062
"FUTURE REC SITE"
SMITH FARM PUD, PH 1
BM 2018, PG 922 & 923
PIN No. 0722303175

SMITH FARMS OF APEX HOMEOWNERS
ASSOCIATION, INC.
DB 17177, PG 741
COMMON AREA 1
HALEY AT SMITH FARMS
BM 2018, PG 934
PIN No. 0721396648

SMITH FARMS OF APEX
HOMEOWNERS
ASSOCIATION, INC.
DB 17177, PG 741
COMMON AREA 3
HALEY AT SMITH FARMS
BM 2018, PG 934
PIN No. 0722309093

FARMHOUSE DRIVE
50' R/W

SMITH FARMS OF APEX
HOMEOWNERS
ASSOCIATION, INC.
DB 17177, PG 741
COMMON AREA 2
HALEY AT SMITH FARMS
BM 2018, PG 934
PIN NO. 0721397362

THASSOS DRIVE
50' R/W

OLIVE CHAPEL ROAD
(SR 1160)
VARIABLE WIDTH R/W

RILEYS
POND DRIVE
50' R/W

GRAPHIC SCALE
100 0 50 100 200
1 inch = 100 ft.

PRELIMINARY
NOT APPROVED FOR
CONSTRUCTION

| No. | Revision | Date | By |
|---|---|---|---|
| | | | |

| | |
|---|---|
| Designer: WR | Scale: 1" = 100' |
| Drawn By: WR | Date: 02/26/2021 |
| Checked By: WR | Job No.: 02180517.20 |

# HACKNEY

APEX WAKE COUNTY NORTH CAROLINA

# CONCEPTUAL STORMWATER MANAGEMENT PLAN

WithersRavenel
Engineers | Planners | Surveyors
115 MacKenan Drive | Cary, NC 27511 | t: 919.469.3340 | license #: C-0832 | www.withersravenel.com

Sheet No. 4.0



K:\180\02180517.20\Hackney Tract\Apex\CAD\Drawing Sets\PLAN\4.0 STORMWATER MANAGEMENT PLAN.dwg Friday, February 26, 2021 10:32:15 AM JNGE, BRYANT

# | Agenda Item | cover sheet

for consideration by the Apex Town Council

Item Type: PUBLIC HEARING

Meeting Date: March 23, 2021

## Item Details

Presenter(s): Liz Loftin, Senior Planner

Department(s): Planning and Community Development

Requested Motion

Public Hearing and possible motion to approve Rezoning Application #21CZ02 Abbey Spring PUD. The applicant, Isabel Worthy Mattox, Mattox Law Firm, seeks to rezone approximately 5.01 acres located at 0 W. Williams Street (PIN 0742026247) from Planned Unit Development-Conditional Use (PUD-CU #02CU13) to Planned Unit Development-Conditional Zoning (PUD-CZ).

Approval Recommended?

The Planning and Community Development Department recommends approval.

The Planning Board held a Public Hearing on March 8, 2021 and voted to recommend approval, with the conditions as offered by the applicant, by a vote of 5-1.

Item Details

Attachments

- Staff Report
- Vicinity Map
- Application

All property owners and neighborhood associations within 300 feet of this rezoning have been notified per UDO Sec. 2.2.11 *Public Notification*.

## BACKGROUND INFORMATION:

**Location:** 0 W. Williams Street
**Applicant/Agent:** Isabel Worthy Mattox, Mattox Law Firm
**Owner:** Lidl US Operations, LLC

## PROJECT DESCRIPTION:

**Acreage:** ±5.01 acres
**PIN:** 0742026247
**Current Zoning**: Planned Unit Development-Conditional Use (PUD-CU #02CU13)
**Proposed Zoning**: Planned Unit Development-Conditional Zoning (PUD-CZ)
**2045 Land Use Map Designation**: High Density Multifamily/Commercial Services (A)
**Town Limits**: Inside

**Adjacent Zoning & Land Uses:**

| | Zoning | Land Use |
|---|---|---|
| **North:** | Planned Unit Development-Conditional Use (PUD-CU #02CU13) | Retail (Walgreens) |
| **South:** | High Density Single Family-Conditional Use (HDSF-CU #94CU10); Office & Institutional (O&I) | Amherst Single Family Subdivision; Post Office |
| **East:** | Planned Unit Development-Conditional Use (PUD-CU #02CU13) | W. Williams Street; Funeral Home |
| **West:** | High Density Multi-Family-Conditional Use (HDMF-CU #01TRZ08/#97CU16) & Office & Institutional-Conditional Use (O&I-CU #97CU16) | Glen Arbor Townhomes; Spring Arbor Nursing Home |

**EXISTING CONDITIONS:**
The property is on the west side of West Williams Street, south of Olive Chapel Road and north of Bryan Drive. The property was previously cleared and currently is vacant.

**NEIGHBORHOOD MEETING:**
The applicant conducted a neighborhood meeting on December 15, 2020. The neighborhood meeting report is attached.

**2045 LAND USE MAP:**
The 2045 Land Use Map designates the subject property as High Density Multifamily/Commercial Services (A). The proposed PUD is consistent with the Land Use Map designation.

**PLANNED UNIT DEVELOPMENT PLAN:**
The applicant is proposing a Planned Unit Development Plan with uses and development standards as follows:

## Permitted Uses:

The Rezoned Lands may be used for, and only for, the uses listed immediately below. The permitted uses are subject to the limitations and regulations stated in the UDO and any additional limitations or regulations stated below. For convenience, some relevant sections of the UDO may be referenced; such references do not imply that other sections of the UDO do not apply.

1. Age Restricted Multi-Family or Apartment meeting the federal definition of elderly housing, having at least eighty percent (80%) of the occupied units occupied by at least one person fifty-five (55) or older per unit.
   **The allowed residential uses must meet the requirements of the Section 42 of the Internal Revenue Code ("Code") or a substantially equivalent form of affordable rental housing. 100% of the dwelling units developed on the property must meet this requirement. Accordingly, rents shall be set at a price that on average is affordable to a household with an annual income that is no greater than 60% of the Area Median Income for the respectively-sized household in the Raleigh, NC MSA, as determined by the United States Department of Housing and Urban Development (HUD) at the time of move-in.*

## Proposed Design Controls:

**Density**
The PD Plan proposes an overall maximum residential density of 17 dwelling units per acre.

**Height**
The maximum building height shall be three (3) stories and 48 feet. Certain architectural elements (project identify features, towers, spires, etc.) may surpass this height limit with Town approval as part of the site plan review process.

**Minimum Setbacks**

| | Current PUD-CU Setbacks* | Proposed PUD-CZ setbacks |
|---|---|---|
| Front | 20' | 5' from buffer<br>5' from vehicular use area |
| Side** | 15' (office);<br>20' (commercial) | 5' from buffer<br>5' from vehicle use area |
| Rear | 20' | 5' from buffer<br>5' from vehicle use area |

* No required building or parking setback from buffers or streetscapes/streetfronts
** A 20' building setback will be required along the property line with Walgreen's.

**Buffers**
The proposed PUD meets or exceeds the buffers required by the UDO.

| Perimeter Buffers: | UDO Required | Proposed |
|---|---|---|
| Southern property boundary | 15' Type A | 40' Type A |
| Western property boundary | 15' Type A | 20' Type A |
| W. Williams Street | 30' Type B | 30' Type B |

**Built Upon Area**
The proposed maximum built upon area is less than 70%.

**Resource Conservation Area**
The current PUD provides for 2.29 acres of RCA over the entire 13.28 acres within the Town Center Commons rezoning case (#02CU13). The current RCA requirement on this parcel is approximately 60,000 square feet. The applicant will maintain at least 62,162 square feet (1.45 acres) of RCA, consistent with UDO Section 8.1.2.B.1.i., to include any areas that are disturbed to be replanted and counted as RCA.

**Planting and Landscaping:**
- Biodiversity- The project will promote biodiversity through: (i) planning pollinator-friendly flora; and planting native flora.
- Green Infrastructure- The project will provide diverse and abundant pollinator and bird food sources (e.g., nectar, pollen, and berries blooming plants) that bloom in succession form spring to fall.
- Garden- The development will include a community garden and or a native pollinator demonstration garden.
- Drought Resistance- The development will include landscaping that requires less irrigation and chemical use and warm season grasses that facilitate drought resistance.
- Trees- The development will increase the number of native hardwood tree species to at least 3 species.
- Pet Waste Stations- The development will include pet waste stations.
- Signage- The development will include signage identifying environmentally sensitive areas.

**Parking**
The applicant is requesting a reduction in the required parking since the project is age restricted (senior) apartments. The parking shall be 1.1 space per dwelling unit which is similar to the ratio required for congregate living facilities. The requested reduction is based on the applicant's experience with similar developments in the region and the planned transit stop that will be in close walking distance.

To facilitate a building layout which is ADA accessible and accommodates cross access and environmentally sensitive areas, more than fifty percent (50%) of parking shall be allowed between the building and the street.

**Transit**
It is anticipated that the Town of Apex will install a new bus stop for GoApex Route 1 in front of the

United States Post Office on West Williams Street. This is a funded project with designs approved by NCDOT. The approved design includes an amenity pad, bench, and other improvements, with room for a future shelter. If the Town has completed those improvements prior to the completion of the proposed development, the applicant shall construct the following at the new bus stop: shelter, trash receptacle. These improvements would be made within the existing right of way prior to the issuance of a CO for the development.

**Architectural Standards**
The building scale and mass for this multifamily community will reflect the residential scale and character of traditional Apex architecture. Building materials to be used for the apartments shall include a variety and diversity of colors, textures, and features provide unique character while still maintaining a level of consistency and compatibility with the Apex style. Further detailing shall be provided at the time of site plan submittal.

The scale of new structures will be appropriate to the building type and will also relate appropriately to adjacent land uses. Apartment structures will be in scale with proposed retail development adjacent to those uses. Height, mass, form and roof configurations will be given particular attention as elements of scale. The main exterior building materials are brick and vinyl lap siding, with accent vinyl vertical siding. Awnings, gable vents, Juliet balconies, a cupola and accent metal roofing will be included to add variation and interest throughout the building. The building design will also feature a rear porch, a porte cochere and a balcony with seating.

Various architectural and landscape street elements will be incorporated to enhance the traditional character and walkability of the community. These elements may include patios, railings, benches, lighting, entry features, lawn areas and open space.

This building will be built to the Energy Star Multifamily New Construction Program standards. This includes items that will be built to a higher standard of efficiency, including: energy efficient lighting and appliances, Energy Star windows, higher resistance envelope insulation (it will be at least R-15 for walls) and higher efficiency HVAC. The design will also include light sensors for exterior lighting and movement sensors for interior common area lighting.

**Public Facilities:**
The project's construction will consist of the extension of public facilities to serve the site. All public facilities and infrastructure shall comply with the Town of Apex Sewer and Water Master Plans and the Town of Apex Standards and Specifications. The proposed development will connect to the existing services in the Williams Street right-of-way.

**STORMWATER MANAGEMENT:**
Currently, there is a stormwater pond serving the adjacent Walgreens development to the north. It is anticipated that the proposed development will include a shared SCM which will serve both sites**.** The post-development on-site stormwater discharge rate for the development shall not exceed the pre-development rate. Quantity measures for stormwater management will be designed for the 1-year, 24-hour and the 10-year, and 25-year, 24-hour design storms. Stormwater management for the entire site will be managed through the use of above ground or underground Stormwater Control Measures (SCMs) to achieve both quantity and quality requirements.

The project proposes the installation of signage nears SCMs, whether above ground or underground in order to: (i) reduce pet waste; and (ii) eliminate fertilizer near SCM drainage areas.

**APEX TRANSPORTATION PLAN/ACCESS and CIRCULATION:**
The proposed PUD is consistent with the Apex Transportation Plan. The proposed development will have access to both W. Williams Street and Olive Chapel Road through joint access drives to the Walgreens development to the north. An additional southbound lane and a 10' wide side path will be added along W. Williams Street. A pedestrian path will be constructed to connect to the Walgreens to the north and the developer will seek a pedestrian connection to the Glen Arbor townhome site.

A 24' vehicular cross-access easement within a 34' driveway construction easement shall be provided from the joint access driveway with Walgreens identified as PIN 0742025548 to the joint property line with the United States Postal Service property to the south identified as PIN 0742 01 8833. The site will be designed to accommodate the possible future extension of a driveway to the adjoining property to the south. No physical cross access improvements will be built as part of the initial development of the property for affordable senior housing. Any parking spaces located within the easement shall count toward parking requirements and any area of the easement outside of the parking lot shall count toward the Resource Conservation Area (RCA) requirement. Any RCA area within the easement, not including buffers, shall not be required to be planted to a specific standard. Any parking spaces removed through the construction of the cross-access easement in the future would need to be replaced by the entity installing the cross access easement.

**CONSISTENCY WITH THE DOWTOWN MASTER PLAN AND AFFORDABLE HOUSING PLAN:**
The proposed rezoning is located within the area included in the Apex Downtown Master Plan which was adopted in December 2019 and which provides a vision to guide development in and around downtown. Expanding housing options including mixed-income and senior-friendly housing near downtown is a key goal of the plan. The proposed rezoning is located less than a mile from the heart of downtown.

The Apex Affordable Housing Plan adopted in February 2021 identified several issues affecting housing affordability which is made up of many distinct but related factors including the supply and diversity of available housing, the accessibility of homeownership, and the availability of housing and services to meet the needs of all residents including seniors, adults with disabilities, and households that rely on public transit. Regarding needs, the Affordable Housing Plan identified an existing gap of 2,000 rental units available to households earning less than $40,000 per year, a gap that is expected to increase over time, and noted there are very limited options for seniors wishing to age in place. In addition, the plan explains that Apex does not have a proportional share of the region's subsidized rental housing. Due primarily to high land costs and limited access to transit. Finally, Apex's housing stock has a larger share of single family homes and smaller share of small and large multifamily developments than the Wake County housing stock as a whole.

To address these needs, the Affordable Housing Plan recommends planning for affordable housing near transit routes and prioritizing gap financing to assist with projects utilizing the Low Income Housing Tax Credit Financing Program. The Plan stresses that priority should be focused on getting new units on the ground and preserving existing affordable units. As a starting point, the Plan suggests using 300 subsidized units developed or in development within five years as a measure of success. The proposed

rezoning is crucial step in the goal of the Abbey Springs project to provide an anticipated 84 subsidized units, targeting seniors, with income restrictions, adjacent to a transit stop. The goals of the rezoning directly align with the most pressing needs and highest-priority recommendations in the Affordable Housing Plan.

**ENVIROMENTAL ADVISORY BOARD:**
The Apex Environmental Advisory Board (EAB) held a pre-application meeting for this rezoning on December 17, 2020. The zoning conditions suggested by the EAB are listed below along with the applicant's response to each condition.

| EAB Suggested Condition | Applicant's Response |
|---|---|
| Install signage near environmental sensitive areas in order to:<br>• Reduce pet waste near SCM drainage areas; and<br>• Eliminate fertilizer near SCM drainage areas. | Added |
| Increase biodiversity:<br>Plant pollinator-friendly flora | Added |
| Increase the number of native hardwood tree species planted to 3, preferably 4 | The development will increase the number of native hardwood tree species to at least 3 |
| Install pet waste stations | Added |
| Follow the Energy Star Multifamily New Construction program | Added |
| Include energy efficient lighting in building design | Added |
| Install exterior daylight timers and interior motion sensors for lighting | Added |

**PARKS, RECREATION, AND CULTURAL RESOURCES ADVISORY COMMISSION:**
The Parks, Recreation, and Cultural Resources Advisory Commission reviewed the Abbey Spring project at the February 24, 2021 meeting. The Commission made a unanimous recommendation for a fee-in-lieu of dedication.

**PLANNING BOARD RECOMMENDATION:**
The Planning Board held a Public Hearing on March 8, 2021 and voted to recommend approval, with the conditions as offered by the applicant, by a vote of 5-1.

**PLANNING STAFF RECOMMENDATION:**
Planning staff recommends approval of rezoning #21CZ02 Abbey Spring PUD with the conditions as proposed by the applicant.

**ANALYSIS STATEMENT OF THE REASONABLENESS OF THE PROPOSED REZONING:**
This Statement will address consistency with the Town's comprehensive and other applicable plans, reasonableness, and effect on public interest:

The 2045 Land Use Map designates the subject property as High Density Multifamily/Commercial Services (A). The proposed PUD is consistent with those land use classifications.

The proposed rezoning is reasonable and in the public interest because the rezoning will allow the project to be developed as a residential use that will help support the existing non-residential uses in the area. Additionally, the PUD requires that the residential be affordable senior housing. The proximity of this site to shopping and future transit make it an ideal location for senior affordable housing. This is in keeping with the goals of Advance Apex and the Apex Affordable Housing Plan.

**PLANNED UNIT DEVELOPMENT DISTRICT AND CONDITIONAL ZONING STANDARDS:**

***Standards***

In return for greater flexibility in site design requirements, Planned Development (PD) Districts are expected to deliver exceptional quality community designs that preserve critical environmental resources; provide high quality community amenities; incorporate creative design in the layout of buildings, Resource Conservation Area and circulation; ensure compatibility with surrounding land uses and neighborhood character; provide high quality architecture; and provide greater efficiency in the layout and provision of roads, utilities, and other infrastructure. The Planned Development (PD) Districts shall not be used as a means of circumventing the Town's adopted land development regulations for routine developments.

1) *Planned Unit Development (PUD-CZ) District*
In approving a Planned Development (PD) Zoning District designation for a PUD-CZ, the Town Council shall find the PUD-CZ district designation and PD Plan for PUD-CZ demonstrates compliance with the following standards:

a) *Development parameters*

(i) The uses proposed to be developed in the PD Plan for PUD-CZ are those uses permitted in Sec. 4.2.2 *Use Table.*

(ii) The uses proposed in the PD Plan for PUD-CZ can be entirely residential, entirely non-residential, or a mix of residential and non-residential uses, provided a minimum percentage of non-residential land area is included in certain mixed use areas as specified on the 2030 Land Use Map. The location of uses proposed by the PUD-CZ must be shown in the PD Plan with a maximum density for each type of residential use and a maximum square footage for each type of non-residential use.

(iii) The dimensional standards in Sec. 5.1.3 *Table of Intensity and Dimensional Standards, Planned Development Districts* may be varied in the PD Plan for PUD-CZ. The PUD-CZ shall demonstrate compliance with all other dimensional standards of the UDO, North Carolina Building Code, and North Carolina Fire Code.

(iv) The development proposed in the PD Plan for PUD-CZ encourages cluster and compact development to the greatest extent possible that is interrelated and linked by pedestrian ways, bikeways and other transportation systems. At a minimum, the PD Plan must show sidewalk improvements as required by the Apex Transportation Plan and the *Town of Apex Standard Specifications and Standard Details*, and greenway improvements as required by the Town of Apex Parks, Recreation, Greenways, and Open Space Plan and the Apex Transportation Plan. In addition, sidewalks shall be provided on both sides of all streets for single-family detached homes.

v) The design of development in the PD Plan for PUD-CZ results in land use patterns that promote and expand opportunities for walkability, connectivity, public transportation, and an efficient compact network of streets. Cul-de-sacs shall be avoided unless the design of the subdivision and the existing or proposed street system in the surrounding area indicate that a through street is not essential in the location of the proposed cul-de-sac, or where sensitive environmental areas such as streams, floodplains, and wetlands would be substantially disturbed by making road connections.

(vi) The development proposed in the PD Plan for PUD-CZ is compatible with the character of surrounding land uses and maintains and enhances the value of surrounding properties.

(vii) The development proposed in the PD Plan for PUD-CZ has architectural and design standards that are exceptional and provide higher quality than routine developments. All residential uses proposed in a PD Plan for PUD-CZ shall provide architectural elevations representative of the residential structures to be built to ensure the Standards of this Section are met.

b) *Off-street parking and loading*. The PD Plan for PUD-CZ shall demonstrate compliance with the standards of Sec. 8.3 *Off-Street Parking and Loading*, except that variations from these standards may be permitted if a comprehensive parking and loading plan for the PUD-CZ is submitted as part of the PD Plan that is determined to be suitable for the PUD-CZ, and generally consistent with the intent and purpose of the off-street parking and loading standards.

c) *RCA.* The PD Plan for PUD-CZ shall demonstrate compliance with Sec. 8.1.2 Resource Conservation Area, except that the percentage of RCA required under Sec. 8.1.2 may be reduced by the Town Council by no more than ten percent (10%) provided that the PD Plan for PUD-CZ includes one or more of the following:

(i) A non-residential component; or

(ii) An overall density of 7 residential units per acre or more; or

(iii) Environmental measures including but not limited to the following:
(a) The installation of a solar photovoltaic (PV) system on a certain number or percentage of single-family or townhouse lots or on a certain number or percentage of multifamily, mixed-use, or nonresidential buildings. All required solar installation shall be completed or under construction prior to 90% of the building permits being issued for the approved number of lots or buildings. For single-family or townhouse installations, the lots on which these homes are located shall be identified on the Master Subdivision Plat, which may be amended;

(b) The installation of a geothermal system for a certain number or percentage of units within the development; or

(c) Energy efficiency standards that exceed minimum Building Code requirements (i.e. SEER rating for HVAC).

d) *Landscaping*. The PD Plan for PUD-CZ shall demonstrate compliance with the standards of Sec. 8.2 *Landscaping, Buffering and Screening*, except that variations from these standards may be permitted where it is demonstrated that the proposed landscaping sufficiently buffers uses from each other, ensures compatibility with land uses on surrounding properties, creates attractive streetscapes and parking areas and is consistent with the character of the area. In no case shall a buffer be less than one half of the width required by Sec. 8.2 or 10 feet in width, whichever is greater.

e) *Signs.* Signage in the PD Plan for PUD-CZ shall demonstrate compliance with Sec. 8.7 *Signs*, except that the standards can be varied if a master signage plan is submitted for review and approval concurrent with the PD plan and is determined by the Town Council to be suitable for the PUD-CZ and generally consistent with the intent and purpose of the sign standards of the UDO. The master signage plan shall have design standards that are exceptional and provide for higher quality signs than those in routine developments and shall comply with Sec. 8.7.2 *Prohibited Signs*.

f) *Public facilities.* The improvements standards and guarantees applicable to the public facilities that will serve the site shall comply with Article 7: *Subdivision and* Article 14: *Parks, Recreation, Greenways, and Open Space*.

(i) The PD Plan for PUD-CZ demonstrates a safe and adequate on-site transportation circulation system. The on-site transportation circulation system shall be integrated with the off-site transportation circulation system of the Town. The PD Plan for PUD-CZ shall be consistent with the Apex Transportation Plan and the *Town of Apex Standard Specifications and Standard Details* and show required right-of-way widths and road sections. A Traffic Impact Analysis (TIA) shall be required per Sec. 13.19.

(ii) The PD Plan for PUD-CZ demonstrates a safe and adequate on-site system of potable water and wastewater lines that can accommodate the proposed development, and are efficiently integrated into off-site potable water and wastewater public improvement plans. The PD Plan shall include a proposed water and wastewater plan.

(iii) Adequate off-site facilities for potable water supply, sewage disposal, solid waste disposal, electrical supply, fire protection and roads shall be planned and programmed for the development proposed in the PD Plan for PUD-CZ, and the development is conveniently located in relation to schools and police protection services.

(iv) The PD Plan shall demonstrate compliance with the parks and recreation requirements of Sec. Article 14: *Parks, Recreation, Greenways, and Open Space* and Sec. 7.3.1 *Privately-owned Play Lawns* if there is a residential component in the PUD-CZ.

g) *Natural resource and environmental protection.* The PD Plan for PUD-CZ demonstrates compliance with the current regulatory standards of this Ordinance related to natural resource and environmental protection in Sec. 6.1 *Watershed Protection Overlay District*, Sec. 6.2 *Flood Damage Prevention Overlay District*, and Sec. 8.1 *Resource Conservation*.

h) *Storm water management.* The PD Plan shall demonstrate that the post-development rate of on-site storm water discharge from the entire site shall not exceed pre-development levels in accordance with Sec. 6.1.7 of the UDO.

i) *Phasing.* The PD Plan for PUD-CZ shall include a phasing plan for the development. If development of the PUD-CZ is proposed to occur in more than one phase, then guarantees shall be provided that project improvements and amenities that are necessary and desirable for residents of the project, or that are of benefit to the Town, are constructed with the first phase of the project, or, if this is not possible, then as early in the project as is technically feasible.

j) *Consistency with 2045 Land Use Map.* The PD Plan for PUD-CZ demonstrates consistency with the goals and policies established in the Town's 2030 Land Use.

k) *Complies with the UDO.* The PD Plan for PUD-CZ demonstrates compliance with all other relevant portions of the UDO.

***Legislative Considerations***

The Town Council shall find the PUD-CZ designation demonstrates compliance with the following standards. Sec. 2.3.3.F:

The applicant shall propose site-specific standards and conditions that take into account the following considerations, which are considerations that are relevant to the legislative determination of whether or not the proposed conditional zoning district rezoning request is in the public interest. These considerations do not exclude the legislative consideration of any other factor that is relevant to the public interest.

1) *Consistency with 2030 Land Use Map.* The proposed Conditional Zoning (CZ) District use's appropriateness for its proposed location and consistency with the purposes, goals, objectives, and policies of the 2030 Land Use Map.

2) *Compatibility.* The proposed Conditional Zoning (CZ) District use's appropriateness for its proposed location and compatibility with the character of surrounding land uses.

3) *Zoning district supplemental standards.* The proposed Conditional Zoning (CZ) District use's compliance with Sec. 4.4 *Supplemental Standards,* if applicable.

4) *Design minimizes adverse impact.* The design of the proposed Conditional Zoning (CZ) District use's minimization of adverse effects, including visual impact of the proposed use on adjacent lands; and avoidance of significant adverse impacts on surrounding lands regarding trash, traffic, service delivery, parking and loading, odors, noise, glare, and vibration and not create a nuisance.

5) *Design minimizes environmental impact.* The proposed Conditional Zoning District use's minimization of environmental impacts and protection from significant deterioration of water and air resources, wildlife habitat, scenic resources, and other natural resources.

6) *Impact on public facilities.* The proposed Conditional Zoning (CZ) District use's avoidance of having adverse impacts on public facilities and services, including roads, potable water and wastewater facilities, parks, schools, police, fire and EMS facilities.

7) *Health, safety, and welfare.* The proposed Conditional Zoning (CZ) District use's effect on the health, safety, or welfare of the residents of the Town or its ETJ.

8) *Detrimental to adjacent properties.* Whether the proposed Conditional Zoning (CZ) District use is substantially detrimental to adjacent properties.

9) *Not constitute nuisance or hazard.* Whether the proposed Conditional Zoning (CZ) District use constitutes a nuisance or hazard due to traffic impact or noise, or because of the number of persons who will be using the Conditional Zoning (CZ) District use.

10) *Other relevant standards of this Ordinance.* Whether the proposed Conditional Zoning (CZ) District use complies with all standards imposed on it by all other applicable provisions of this Ordinance for use, layout, and general development characteristics.


Rezoning #21CZ02
Olive Chapel Rd
W Williams St
Spring Arbor Ct
Spring Gate Ct
Glen Arbor
Arbor Valley Ln
Walgreens
Hunter Valley
Gablefield Ln
Fairview Road
Hunter St
W Chatham St
Bryan Dr
Bristol Blue St
Tranter Dr
Amherst
February, 2021
January 2021 Aerial Photography
Prepared by: Town of Apex Planning Department
0
250
500
Feet

## PLANNED UNIT DEVELOPMENT APPLICATION

This document is a public record under the North Carolina Public Records Act and may be published on the Town's website or disclosed to third parties.

Application #: 2021-002 Submittal Date: 1/4/2021

Fee Paid $ 500.00 Check # 5074

## PETITION TO AMEND THE OFFICIAL ZONING DISTRICT MAP

Project Name: Abbey Spring

Address(es): 0 W. Williams Street, Apex, NC 27502

PIN(s) 0742026247

Acreage: 5.01

Current Zoning: PUD-CU Proposed Zoning: PUD-CZ

Current 2045 LUM Designation:

Requested 2045 LUM Designation:

See next page for LUM amendment

If any portion of the project is shown as mixed use (3 or more stripes on the 2045 Land Use Map) provide the following:

Area classified as mixed use: Acreage:

Area proposed as non-residential development: Acreage:

Percent of mixed use area proposed as non-residential: Percent:

### Applicant Information

Name: Isabel Worthy Mattox, Mattox Law Firm

Address: 127 W. Hargett Street, Suite 500

City: Raleigh State: NC Zip: 27601

Phone: 919-828-7171 E-mail: Isabel@mattoxlawfirm.com

### Owner Information

Name: Lidl US Operations, LLC

Address: HQ Real Estate Department, 3500 S. Clarke Place

City: Arlington State: VA Zip: 22202-4033

Phone: E-mail:

### Agent Information

Name: Isabel Worthy Mattox, Mattox Law Firm

Address: 127 W. Hargett Street, Suite 500

City: Raleigh State: NC Zip: 27601

Phone: 919-828-7171 E-mail: Isabel@mattoxlawfirm.com

Other contacts: Timothy G. Morgan, VP
Evergreen Construction Company
7706 Six Forks Road, Raleigh, NC 27615

## PLANNED UNIT DEVELOPMENT APPLICATION

Application #: _____ Submittal Date: _____

## 2045 LAND USE MAP AMENDMENT (if applicable)

The applicant does hereby respectfully request the Town Council amend the 2045 Land Use Map. In support of this request, the following facts are shown:

The area sought to be amended on the 2045 Land Use Map is located at:

Current 2045 Land Use Classification: _____

Proposed 2045 Land Use Classification: _____

What conditions justify the passage of the amendment to the 2045 Land Use Map? Discuss the existing use classifications of the subject area in addition to the adjacent land use classifications.

## CERTIFIED LIST OF NEIGHBORING PROPERTY OWNERS

Application #: 2021-002 Submittal Date: 1/4/21

Provide a certified list of property owners subject to this application and all property owners within 300' of the subject property and HOA Contacts.

| | Owner's Name | PIN |
|---|---|---|
| 1. | See list attached as Exhibit B. | |
| 2. | | |
| 3. | | |
| 4. | | |
| 5. | | |
| 6. | | |
| 7. | | |
| 8. | | |
| 9. | | |
| 10. | | |
| 11. | | |
| 12. | | |
| 13. | | |
| 14. | | |
| 15. | | |

I, Isabel Worthy Mattox, certify that this is an accurate listing of all property owners and property owners within 300' of the subject property.

Date: December 16, 2020 By: _____

COUNTY OF WAKE STATE OF NORTH CAROLINA

Sworn and subscribed before me this the 16th day of December, 2020 by Isabel Worthy Mattox.

SEAL

MARY L. GALECKI
Notary Public, North Carolina
Franklin County
My Commission Expires
July 09, 2025

Mary L. Galecki
Notary Public

Mary L. Galecki
Print Name

My Commission Expires: July 9, 2025

## DEVELOPMENT NAME APPROVAL APPLICATION

Application #: 2021-002 Submittal Date: 1/4/21

Fee for Initial Submittal: No Charge Fee for Name Change after Approval: $500*

### Purpose

To provide a consistent and clearly stated procedure for the naming of subdivisions and/or developments and entrance roadways (in conjunction with *Town of Apex Address Policy*) so as to allow developers to define and associate the theme or aesthetics of their project(s) while maintaining the Town's commitment to preserving the quality of life and safety for all residents of Apex proper and extraterritorial jurisdiction.

### Guidelines

- ✓ The subdivision/development name shall not duplicate, resemble, or present confusion with an existing subdivision/development within Apex corporate limits or extraterritorial jurisdiction except for the extension of an existing subdivision/development of similar or same name that shares a continuous roadway.
- ✓ The subdivision/development name shall not resemble an existing street name within Apex corporate limits or extraterritorial jurisdiction unless the roadway is a part of the subdivision/development or provides access to the main entrance.
- ✓ The entrance roadway of a proposed subdivision/development shall contain the name of the subdivision/development where this name does not conflict with the Town of Apex *Road Name Approval Application* and *Town of Apex Address Policy* guidelines.
- ✓ The name "Apex" shall be excluded from any new subdivision/development name.
- ✓ Descriptive words that are commonly used by existing developments will be scrutinized more seriously in order to limit confusion and encourage distinctiveness. A list of commonly used descriptive words in Apex's jurisdiction is found below.
- ✓ The proposed subdivision/development name must be requested, reviewed and approved during preliminary review by the Town.
- ✓ A $500.00 fee will be assessed to the developer if a subdivision/development name change is requested after official submittal of the project to the Town.*

*The imposed fee offsets the cost of administrative changes required to alleviate any confusion for the applicant, Planning staff, other Town departments, decision-making bodies, concerned utility companies and other interested parties. There is no charge for the initial name submittal.

### Existing Development Titles, Recurring

| | Residential | Non-Residential |
|---|---|---|
| 10 or more | Creek, Farm(s), Village(s), | Center/Centre |
| 6 to 9 | Crossing(s), Park, Ridge, Wood(s) | Commons, Park |
| 3 to 5 | Acres, Estates, Glen(s), Green*, Hills | Crossing(s), Plaza, Station, Village(s) |

*excludes names with Green Level

## DEVELOPMENT NAME APPROVAL APPLICATION

Application #: 2021-002 Submittal Date: 1/4/21

### Proposed Subdivision/Development Information

Description of location: 0 W. Williams Street; 5.01 Acre Parcel; New McIver Parcel BM2006-02021

Nearest intersecting roads: W. Williams Street and Olive Chapel Road

Wake County PIN(s): 0742026247

Township: White Oak

### Contact Information (as appropriate)

Contact person: Isabel Worthy Mattox, Mattox Law Firm

Phone number: (919) 828-7171 Fax number: N/A

Address: 127 W. Hargett Street, Suite 500, Raleigh, NC 27601

E-mail address: Isabel@mattoxlawfirm.com

Owner: Lidl US Operations, LLC

Phone number: _____ Fax number: _____

Address: HQ Real Estate Department, 3500 S. Clark Place, Arlington, VA 22202

E-mail address: c/o Isabel Worthy Mattox email: Isabel@mattoxlawfirm.com

### Proposed Subdivision/Development Name

1st Choice: Abbey Spring

2nd Choice *(Optional)*: _____

**Town of Apex Staff Approval:**

_____ _____

Town of Apex Planning Department Staff Date

## TOWN OF APEX UTILITIES OFFER AND AGREEMENT

Application #: 2021-002 Submittal Date: 1-4-21

**Town of Apex**
**73 Hunter Street**
**P.O. Box 250 Apex, NC 27502**
**919-249-3400**

WAKE COUNTY, NORTH CAROLINA CUSTOMER SELECTION AGREEMENT

0 W. Williams Street

PIN 0742026247 (Real Estate ID #0036171)

(the "Premises")

The Town of Apex offers to provide you with electric utilities on the terms described in this Offer & Agreement. If you accept the Town's offer, please fill in the blanks on this form and sign and we will have an Agreement once signed by the Town.

Evergreen Construction Co., the undersigned customer ("Customer") hereby irrevocably chooses and selects the Town of Apex (the "Town") as the permanent electric supplier for the Premises. Permanent service to the Premises will be preceded by temporary service if needed.

The sale, delivery, and use of electric power by Customer at the Premises shall be subject to, and in accordance with, all the terms and conditions of the Town's service regulations, policies, procedures and the Code of Ordinances of the Town.

Customer understands that the Town, based upon this Agreement, will take action and expend funds to provide the requested service. By signing this Agreement the undersigned signifies that he or she has the authority to select the electric service provider, for both permanent and temporary power, for the Premises identified above.

Any additional terms and conditions to this Agreement are attached as Appendix 1. If no appendix is attached this Agreement constitutes the entire agreement of the parties.

Acceptance of this Agreement by the Town constitutes a binding contract to purchase and sell electric power.

Please note that under North Carolina General Statute §160A-332, you may be entitled to choose another electric supplier for the Premises.

Upon acceptance of this Agreement, the Town of Apex Electric Utilities Division will be pleased to provide electric service to the Premises and looks forward to working with you and the owner(s).

ACCEPTED:

| | |
|---|---|
| CUSTOMER: Evergreen Construction Company | TOWN OF APEX |
| BY: ** signature to follow at later date ** | BY: |
| Authorized Agent | Authorized Agent |
| DATE: | DATE: |

## AGENT AUTHORIZATION FORM

Application #: 2021-002 Submittal Date: 1/4/21

Lidl US Operations, LLC is the owner* of the property for which the attached application is being submitted:

- ☐ Land Use Amendment
- ☑ Rezoning: For Conditional Zoning and Planned Development rezoning applications, this authorization includes express consent to zoning conditions that are agreed to by the Agent which will apply if the application is approved.
- ☐ Site Plan
- ☐ Subdivision
- ☐ Variance
- ☐ Other: _____

The property address is: 0 W. Williams Street

The agent for this project is: _____

☐ I am the owner of the property and will be acting as my own agent

Agent Name: Isabel Worthy Mattox, Mattox Law Firm

Address: 127 W. Hargett Street, Suite 500, Raleigh, NC 27601

Telephone Number: 919-828-7171

E-Mail Address: Isabel@mattoxlawfirm.com

Signature(s) of Owner(s)*

See Signature Page of Owner attached as Exhibit C

Type or print name Date

Type or print name Date

Sr. Director RE

DIRECTOR OF RealEstate

1/11/21

Attach additional sheets if there are additional owners.

*Owner of record as shown on the latest equalized assessment rolls of Wake County. An option to purchase does not constitute ownership. If ownership has been recently transferred, a copy of the deed must accompany this authorization.

Pursuant to Article 40 of Chapter 66 of the North Carolina General Statutes (the Uniform Electronic Transactions Act) this application and all documents related hereto containing an electronic or digitized signature are legally binding in the same manner as are hard copy documents executed by hand signature. The parties hereby consent to use electronic or digitized signatures in accordance with the Town's Electronic Signature Policy and intend to be bound by the application and any related documents. If electronic signatures are used the application shall be delivered in an electronic record capable of retention by the recipient at the time of receipt.

## AFFIDAVIT OF OWNERSHIP

Application #: 2021-002 Submittal Date: 1-4-21

The undersigned, Lidl US Operations, LLC (the "Affiant") first being duly sworn, hereby swears or affirms as follows:

1. Affiant is over eighteen (18) years of age and authorized to make this Affidavit. The Affiant is the sole owner, or is the authorized agent of all owners, of the property located at 0 W. Williams Street, Apex, NC 27502 and legally described in **Exhibit "A"** attached hereto and incorporated herein (the "Property").

2. This Affidavit of Ownership is made for the purpose of filing an application for development approval with the Town of Apex.

3. If Affiant is the owner of the Property, Affiant acquired ownership by deed, dated May 10, 2016, and recorded in the Wake County Register of Deeds Office on May 13, 2016, in Book 16383 Page 2673.

4. If Affiant is the authorized agent of the owner(s) of the Property, Affiant possesses documentation indicating the agency relationship granting the Affiant the authority to apply for development approval on behalf of the owner(s).

5. If Affiant is the owner of the Property, from the time Affiant was deeded the Property on May 13, 2016, Affiant has claimed sole ownership of the Property. Affiant or Affiant's predecessors in interest have been in sole and undisturbed possession and use of the property during the period of ownership. Since taking possession of the Property on May 13, 2016, no one has questioned Affiant's ownership or right to possession nor demanded any rents or profits. To Affiant's knowledge, no claim or action has been brought against Affiant (if Affiant is the owner), or against owner(s) (if Affiant is acting as an authorized agent for owner(s)), which questions title or right to possession of the property, nor is any claim or action pending against Affiant or owner(s) in court regarding possession of the Property.

This the 11th day of January, 2021.

**LIDL US OPERATIONS, LLC, a Delaware limited liability company**

**By:** _____
**Name:** Connor P. Berry
**Title:** Sr. Director Real Estate

**By:** _____
**Name:** Nicholas V. Cacaci
**Title:** Director of Real Estate

## Notary Acknowledgement Follows

**NOTARY ACKNOWLEDGEMENT**
Affidavit of Ownership

STATE OF Virginia
COUNTY OF Arlington

I, the undersigned, a Notary Public in and for the County of Arlington, hereby certify that Connor P. Bevans, Affiant, personally known to me ~~or known to me by said Affiant's presentation of said Affiant's~~ _____, personally appeared before me this day and acknowledged the due and voluntary execution of the foregoing Affidavit.

Kimberlee Ann Moore Today's date: 1/11/2021
Notary Public
State of Virginia
My Commission Expires: 7/31/2022

KIMBERLEE ANN MOORE NOTARY PUBLIC REG # 7782076 MY COMMISSION EXPIRES 7/31/2022 COMMONWEALTH OF VIRGINIA

*[NOTARY SEAL]*

STATE OF Virginia
COUNTY OF Arlington

I, the undersigned, a Notary Public in and for the County of Arlington, hereby certify that Nicholas V. Cacaci, Affiant, personally known to me or ~~known to me by said Affiant's presentation of said Affiant's~~ _____, personally appeared before me this day and acknowledged the due and voluntary execution of the foregoing Affidavit.

Kimberlee Ann Moore Today's date: 1/11/2021
Notary Public
State of Virginia
My Commission Expires: 7/31/2022

*[NOTARY SEAL]*

KIMBERLEE ANN MOORE NOTARY PUBLIC REG # 7782076 MY COMMISSION EXPIRES 7/31/2022 COMMONWEALTH OF VIRGINIA

## AFFIDAVIT OF OWNERSHIP: EXHIBIT A – LEGAL DESCRIPTION

Application #: _____ Submittal Date: _____

**Insert legal description below.**

Lying and being in White Oak Township, Wake County, North Carolina and being more particularly described as follows:

BEGINNING at an existing iron pipe being the common corner of the property owned by Yorktown 1031 LLC (now or formerly) as described in that instrument recorded in Book 12433, Page 1977 and shown on Book of Maps 2006, Page 2021 and in the eastern boundary line of property owned by Spring Arbor of Apex Limited Partnership(now or formerly) as described in that instrument recorded in Book 8326, Page 2273 in the Wake County Public Registry, said existing iron pipe being located South 76° 54' 27" East 15,634.31 feet from N.C.G.S. Monument "Roger" having NAD 83 (2011) North Carolina State Plane Grid Coordinates N=726,051.44 feet and E=2,025,090.57 feet, with a combined grid reduction factor of 0.99989851; thence with the southern boundary of aforesaid property the following nine (9) courses and distances: (1) South 48° 42' 02" East 68.33 feet to an existing PK Nail and (2) South 81 ° 1 O' 51" East 146.59 feet to an existing iron pipe and (3) North 72° 23' 18" East 30.41 feet to an existing iron pipe and (4) North 79° 49' 28" East 27.92 feet to an existing iron pipe and (5) South 81 ° 09' 41" East 85.26 feet to an existing iron pipe and (6) North 08° 43' 00" East 39.03 feet to an existing iron pipe and (7) South 81 ° 09' 41" East 110.63 feet to an existing iron pipe and (8) North 84° 13' 18" East 47.23 feet to an existing iron pipe and (9) North 69° 35' 51" East 16.32 feet to a computed point on the western margin of West Williams Street (also known as NC Highway 55) having a 100 foot public right-of-way; thence with the western margin of the right-of-way of aforesaid street the following three (3) courses and distances: (1) with a curve to the right having a radius of 2939.35 feet and an arc length of 45.23 feet, having a chord of South 21 °42' 13" East 45 .23 feet to a computed point and (2) South 21 ° 13' 50" East 5. 77 feet to an computed point and (3) South 21 ° 18' 22" East (passing an iron pipe at 349.04 feet) for a total distance of 381.23 feet to an existing iron pipe being the common corner of the property owned by the United States Postal Service as described in that instrument recorded in Book 3972, Page 16 in that aforesaid Registry; thence leaving aforesaid street and following the northern boundary of aforesaid property North 85° 42' 33" West 280.39 feet to an existing iron pipe, continuing with aforesaid property North 85° 38' 49" West 155.03 feet to an existing iron pipe marking the northeast comer of the property owned by Don E. Thomas (now or formerly) as described in that instrument recorded in Book 6803, Page 244 in that aforesaid Registry; thence with the northern boundary of aforesaid property North 85° 32' 28" West 69.92 feet to an existing iron pipe marking the northwest corner of aforesaid property and the northeast corner of property owned by Jane F. Seeger (now or formerly) as described in that instrument recorded in Book 15602, Page 1601 in that aforesaid Registry; thence with the northern boundary of aforesaid property North 85° 41' 13" West 155 .09 feet to an existing iron pipe marking the northwest property corner of aforesaid property and marking the northeast corner of property owned by Michael Herbert (now or formerly) as described in that instrument recorded in Book 15146, Page 1573 in that aforesaid Registry; thence with the northern boundary of aforesaid property North 84° 58' 20" West 27.53 feet to an existing railroad rail marking the southeast corner of property owned by Glen Arbor Townhome Associations Inc. (now or formerly) as described in that instrument recorded in Book 9747, Page 2515 in that aforesaid Registry; thence with eastern boundary of aforesaid property North 02° 05' 59" East 277.43 feet to an existing iron pipe marking the northeast corner of the aforesaid property and marking the southeast corner of the property owned by Spring Arbor of Apex Limited Partnership (now or formerly) as described in that instrument recorded in Book 8326, Page 2273 in that aforesaid Registry; thence with the eastern boundary of aforesaid property North 02° 09' 12" East 107.66 feet to the POINT OR PLACE OF BEGINNING, containing 5.00 acres, more or less, as shown on survey titled "ALT AI ACSM Land Title Survey of Lands For: MOP Retail Consulting, LLC, West Williams Street (aka: NC Highway 55), dated March 18, 2015, and prepared by Michael D. Case of SEPI Engineering & Construction, N.C.P.L.S. No. L-2828.

BEING part of the property conveyed to Mciver Family Holdings, a North Carolina limited liability company, by deed dated December 28, 2000 and recorded in Book 8770, Page 92 in the aforesaid Registry.

## EXHIBIT C

**SIGNATURE PAGE OF PROPERTY OWNER**
PD Plan Amendment Application – Town of Apex
Property: 0 W. Williams Street, Apex, NC 27502

LIDL US OPERATIONS, LLC, a Delaware limited liability company

By: _____
Name: Connor P. Germ
Title: Sr. Director Real Estate

By: _____
Name: Nicholas V. Cocaci
Title: Director of Real Estate

Date: 1/11/21

WAKE COUNTY PUBLIC SCHOOL SYSTEM

# Wake County Residential Development Notification

Please complete each section of this form and submit with your application.

Town of Apex staff will enter this information into the online WCPSS form.

Please send any questions about this form to:
studentassignment-gis-group@wcpss.net

| Developer Company *Information* | |
|---|---|
| Company *Name* | Evergreen Construction Company |
| Company Phone *Number* | 919-848-2041 |
| Developer Representative *Name* | Evergreen Construction Company, Timothy G. Morgan |
| Developer Representative *Phone Number* | 919-848-2041 |
| Developer Representative *Email* | Tim@eccmgt.com |

| New Residential Subdivision *Information* | |
|---|---|
| Date of Application for Subdivision | January 2021 |
| City, Town or Wake County Jurisdiction | Town of Apex; White Oak Township |
| Name of Subdivision | Abbey Spring |
| Address of Subdivision (if unknown enter nearest cross streets) | 0 W. Williams Street, Apex, NC 27502 |
| REID(s) | 0036171 |
| PIN(s) | 0742026247 |

| Projected Dates *Information* | |
|---|---|
| Subdivision *Completion Date* | December 2023 |
| Subdivision *Projected First Occupancy Date* | January 2024 |

**Lot by Lot Development *Information***

| Unit Type | Total # of Units | Senior Living | Studio | 1 Bedroom | 2 Bedroom | 3 Bedroom | 4 Bedroom | Square Foot Range | | Price Range | | Anticipated Completion Units & Dates | | | | | |
|---|---|---|---|---|---|---|---|---|---|---|---|---|---|---|---|---|---|
| | | | | | | | | Min | Max | Low | High | Year | # Units | Year | # Units | Year | # Units |
| Single Family | | | | | | | | | | | | | | | | | |
| Townhomes | | | | | | | | | | | | | | | | | |
| Condos | | | | | | | | | | | | | | | | | |
| Apartments | 84 | | | | | | | | | | | | | | | | |
| Other | | | | | | | | | | | | | | | | | |

Revised 08/10/2018

# Instruction Packet and Affidavit for
# Neighborhood Meetings

Town of Apex
Planning Department
PO Box 250
Apex, NC 27502

T: 919-249-3426
F: 919-249-3338

**This packet consists of instructions and templates for conducting a required Neighborhood Meeting. Planning Department staff are available to advise you in the preparation of these materials. Call the Planning Department at (919) 249-3426 for more information.**

## WHAT IS THE PURPOSE OF A NEIGHBORHOOD MEETING?

A neighborhood meeting is a required form of community outreach to receive initial feedback regarding certain project types prior to submittal to the Planning Department per the standards found in UDO Sec. 2.2.7. The intention of the meeting is to initiate neighbor communication and identify issues and concerns early on and provide the applicant an opportunity to address neighbor concerns about the potential impacts of the project prior to submitting an application. A neighborhood meeting is valid for six (6) months prior to the submission of an application; a delay in submission requires a new neighborhood meeting.

## WHEN IS A NEIGHBORHOOD MEETING REQUIRED?

- Rezonings (including Planned Unit Developments);
- Major Site Plans;
- Residential Master Subdivision Plans (excluding exempt subdivisions); or
- Special Use Permits

## INSTRUCTIONS

Prior to submitting an application for a Rezoning, Major Site Plan, residential Master Subdivision Plan (excluding exempt subdivisions), or Special Use Permit, the applicant must conduct at least one (1) Neighborhood Meeting. The applicant shall submit all forms included in this packet with the initial application submittal.

The Neighborhood Meeting must be held in accordance with the following rules:

**These groups and individuals must be invited to the meeting:**

- The applicant is required to notify the Planning Department, all property owners within 300 feet of the subject property, and any neighborhood association that represents citizens in the area via first class mail a minimum of 10 days in advance of the neighborhood meeting, not including the day of mailing. The applicant shall use <u>their own return address</u> on the envelopes as the meeting is a private meeting between the applicant and the neighbors.
- The applicant shall include with the meeting notice a vicinity map in addition to either the existing zoning map of the area or preliminary plans of the proposed development (see Handout requirements below).

**The meeting must be held within specific timeframes and meet certain requirements:**

- The meeting must be held for a minimum of two (2) hours, Monday through Thursday, during the 5:00 p.m. - 9:00 p.m. time period. The meeting cannot be held on a Town recognized holiday (which coincide with the State of North Carolina recognized holidays).
- The meeting shall be held at a place that is generally accessible to neighbors that reside in close proximity to the land subject to the application.
- A sign-in sheet must be used in order to verify attendance. Ensure each attendee signs in. Please note if any person(s) refuses to sign in. Note if no one attended.
- Handout requirements:
  - For rezonings (excluding rezonings to PUD-CZ, TND-CZ and MEC-CZ), a vicinity map and existing zoning map of the area must be provided to help facilitate discussion.
  - For rezonings to PUD-CZ, TND-CZ and MEC-CZ; Major Site Plans; residential Master Subdivision Plans; and Special Use Permits, preliminary plans of the proposed development must be available at the meeting to help facilitate discussion. Neighbors may request emailed/mailed copies of the maps or plans from the applicant by checking the "send plans" box on the sign-in sheet; applicant shall provide reduced copies upon request.
  - Printed copies must equal the number of notices required to be sent.
  - Contact information for the applicant's representative and Town Staff must be provided on the attached "Project Contact Information" form.
  - "Common Construction Issues & Who to Call" sheet (attached) must be included as part of the handout.
  - A copy of the handout must be included as part of the Neighborhood Meeting report.
- The agenda of the meeting shall include:
  - Explanation of all processes the meeting is being held for (rezoning, subdivision, etc.).
  - Explanation of future meetings (additional neighborhood meetings, Planning Board, Town Council, etc.).
  - Explanation of development proposal – uses and conditions for rezonings, layout for subdivision and site plans, and builder/end user if known/public knowledge.
- Questions or concerns by attendees, and responses by the applicant, if any, must be noted. Provide blank comment sheets or notecards for neighbors to submit written comments. The applicant shall also include any questions and concerns received via written correspondence (such as email) or phone call along with responses provided by the applicant.
- The applicant shall be responsible for notifying any neighbors who check the "Send Plans & Updates" box on the sign-in sheet of any additional neighborhood meetings and the actual submittal date to the Town with a link to the Town of Apex's Interactive Development Map.

**For accountability purposes, please submit the following with your application:**

- A copy of the letter mailed to neighbors and neighborhood organizations (use attached invitation template);
- A list of those persons and neighborhood organizations invited to the meeting;
- A copy of the sign-in sheet (use attached sign-in sheet template);
- A summary of the meeting and a list of any changes made to the project as a result of the neighborhood comments (use attached meeting summary template);
- The affidavit, signed, dated, and notarized (use attached affidavit template); and
- One reduced copy of the maps and/or plans presented to the neighbors at the Neighborhood Meeting.

# NOTICE OF NEIGHBORHOOD MEETING

This document is a public record under the North Carolina Public Records Act and may be published on the Town's website or disclosed to third parties.

December 4, 2020
Date

Dear Neighbor:
You are invited to a neighborhood meeting to review and discuss the development proposal at

0 W. Williams Street, Apex, NC 27502 (Address(es)) 0742026247 (PIN(s))

in accordance with the Town of Apex Neighborhood Meeting procedures. This meeting is intended to be a way for the applicant to discuss the project and review the proposed plans with adjacent neighbors and neighborhood organizations before the submittal of an application to the Town. This provides neighbors an opportunity to raise questions and discuss any concerns about the impacts of the project before it is officially submitted. Once an application has been submitted to the Town, it may be tracked using the Interactive Development Map or the Apex Development Report located on the Town of Apex website at www.apexnc.org.

A Neighborhood Meeting is required because this project includes (check all that apply):

| | Application Type | Approving Authority |
|---|---|---|
| ☑ | Rezoning (including Planned Unit Development) | Town Council |
| ☐ | Major Site Plan | Town Council (QJPH*) |
| ☐ | Special Use Permit | Town Council (QJPH*) |
| ☐ | Residential Master Subdivision Plan (excludes exempt subdivisions) | Technical Review Committee (staff) |

*Quasi-Judicial Public Hearing: The Town Council cannot discuss the project prior to the public hearing.

The following is a description of the proposal (also see attached map(s) and/or plan sheet(s)):

Estimated submittal date: January 4, 2021

**MEETING INFORMATION:**

| | |
|---|---|
| Property Owner(s) name(s): | Lidl US Operations, LLC |
| Applicant(s): | Isabel Worthy Mattox, Mattox Law firm |
| Contact information (email/phone): | Isabel@mattoxlawfirm.com; 919-828-7171 |
| Meeting Address: | See attached meeting notice letter dated December 4, 2020 |
| Date of meeting**: | December 15, 2020 |
| Time of meeting**: | 5:00 pm |

**MEETING AGENDA TIMES:**
Welcome: 5:00 pm Project Presentation: 5:15 pm Question & Answer: 5:45 pm

**Meetings shall occur between 5:00 p.m.-9:00 p.m. on a Monday through Thursday (excluding Town recognized holidays). If you have questions about the general process for this application, please contact the Planning Department at 919-249-3426. You may also find information about the Apex Planning Department and on-going planning efforts at http://www.apexnc.org/180/Planning.

# MATTOX LAW FIRM

*Telephone (919) 828-7171*

*Isabel Worthy Mattox*
*Isabel@mattoxlawfirm.com*
*Matthew Joel Carpenter*
*Matthew@mattoxlawfirm.com*

December 4, 2020

TO ALL ADDRESSEES:

RE: **NOTICE OF MEETING** Regarding Proposed Rezoning Application of:

0 W. Williams Street, Apex, NC 27502 (5.01 acres) (PIN 0742026247) Book 16383, Page 2673, owned by LIDL US Operations, LLC, a Delaware limited liability company (the "Rezoning Property")

Dear Property Owners:

You are invited to a neighborhood meeting to review and discuss the development proposal for the above-referenced Property in accordance with the Town of Apex Unified Development Ordinance and Electronic Neighborhood Meeting procedures. The Neighborhood Meeting is intended as a way for the applicants to discuss the project and review the proposed plans with adjacent neighbors and neighborhood organizations before the submittal of an application to the Town of Apex. This provides neighbors an opportunity to raise questions and discuss any concerns about the impacts of the project before it is officially submitted. Once an application has been submitted to the Town of Apex, it may be tracked using the Interactive Developments Map or the Apex Development Report located on the Town of Apex website at www.apexnc.org. If at all feasible given emergency declarations, limits on in-person gatherings, and social distancing, an additional in-person Neighborhood Meeting may be scheduled and held prior to a public hearing or staff decision on the application.

In accordance with the requirements of the Town of Apex Unified Development Ordinance, notice is hereby given to you as the owner of the Rezoning Property, or the owner of property within 300 feet of the Rezoning Property, of a meeting to discuss the prospective rezoning to be held remotely **via Zoom on Tuesday, December 15, 2020, at 5:00 PM**.

You can join the meeting in any of the following ways:

1. Type the following URL into your internet browser: **https://us02web.zoom.us/j/86452781121**
2. Email Matthew Carpenter at Matthew@mattoxlawfirm.com and receive an e-mail invitation.
3. Call in to the meeting at **929-205-6099** and enter meeting ID: **864 5278 1121**.

To ensure that we are able to address as many questions as possible, please submit questions via email to Matthew@mattoxlawfirm.com prior to the meeting. The meeting will include an introduction, answers to submitted questions, and followed by a general question and answer session. To aid in your participation in the meeting, please find attached a GIS site location and aerial photograph of the Rezoning

Property, a zoning map of the Rezoning Property, and Town of Apex Notice of Electronic Neighborhood Meeting information.

If you plan to attend the meeting, please email Matthew Carpenter with your name and the address of your property either before or after the meeting. Your email response will allow us to assemble an accurate attendance roster.

If the Rezoning Application is filed as now planned in January, it will be vetted by Town of Apex staff over the next few weeks and referred to the Planning Board for review. In addition to the application tracking process mentioned above, you may contact the Town of Apex Planning Department at (919) 249-3426. If you have any questions about the proposed Rezoning Application, either before our meeting of December 15, 2020, or at any time after our meeting, please contact me.

Yours very truly,

*Isabel Mattox*

Isabel Worthy Mattox

cc: Timothy G. Morgan (via email Tim@eccmgt.com)

# Site Location – 0 W. Williams Street

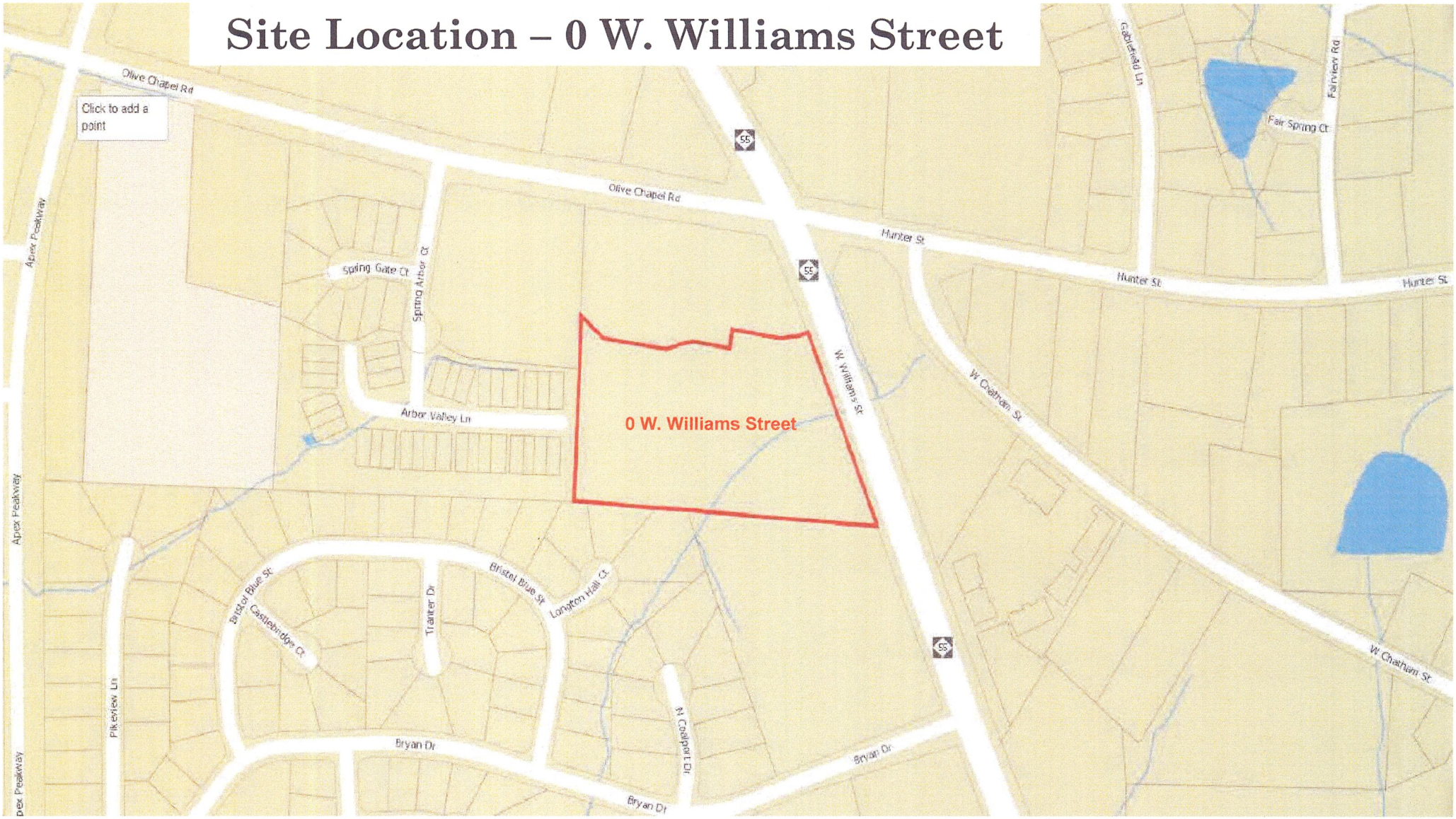

# Aerial


Click to add a point
0 W. Williams Street
Olive Chapel Rd
Hunter St
W Williams St
W Chatham St
Spring Gate Ct
Spring Arbor Ct
Arbor Valley Ln
Bristol Blue St
Bryan Dr
Apex Peakway
Pikeview Ln
Fair Spring Ct
55

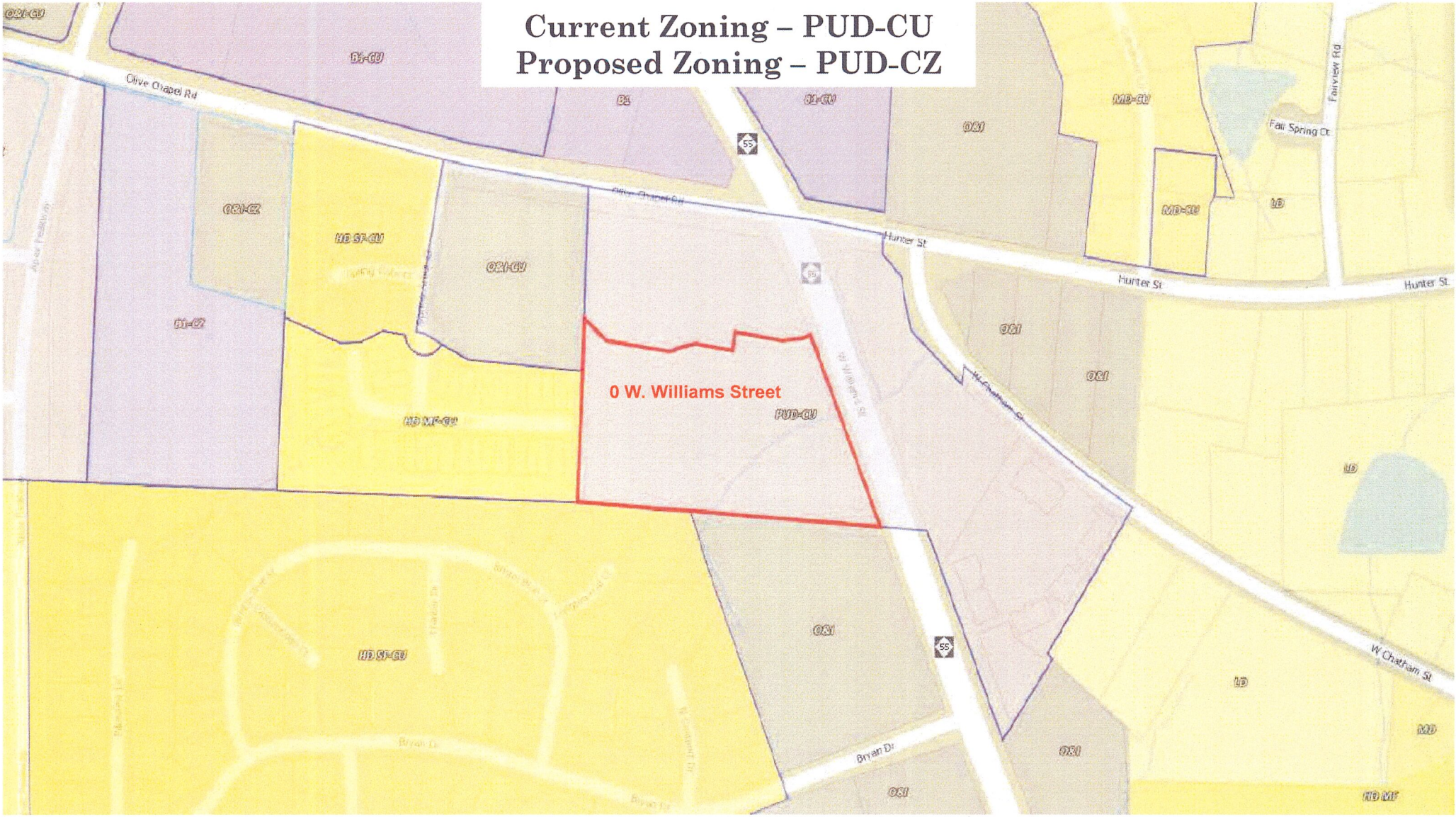
Current Zoning – PUD-CU
Proposed Zoning – PUD-CZ
0 W. Williams Street
PUD-CU
Olive Chapel Rd
Hunter St
W Chatham St
Bryan Dr
Fairview Rd
Fair Spring Ct
O&I
LD
MD
HD MF

# PROJECT CONTACT INFORMATION

This document is a public record under the North Carolina Public Records Act and may be published on the Town's website or disclosed to third parties.

## Development Contacts:

Project Name: Abbey Spring Zoning: PUD-CU

Location: 0 W. Williams Street, Apex, NC

Property PIN(s): 0742026247 Acreage/Square Feet: 5.01 acres

Property Owner: Lidl US Operations, LLC

Address: HQ Real Estate Department, 3500 S. Clark Place

City: Arlington State: VA Zip: 22202-4033

Phone: _____ Email: _____

Developer: Timothy G. Morgan, Evergreen Construction Company

Address: 7706 Six Forks Road

City: Raleigh State: NC Zip: 27615

Phone: 919-848-2041 Fax: n/a Email: Tim@eccmgt.com

Engineer: Rick Baker, Timmons Group

Address: 5410 Trinity Road, Suite 102

City: Raleigh State: NC Zip: 27607

Phone: 919-859-5663 Fax: n/a Email: Rick.Baker@timmons.com

Builder (if known): _____

Address: _____

City: _____ State: _____ Zip: _____

Phone: _____ Fax: _____ Email: _____

**Please note that Town staff will not have complete information about a proposed development until the application is submitted for review. If you have a question about Town development standards and how they relate to the proposed development, please contact the appropriate staff person listed below.**

## Town of Apex Department Contacts

| | |
|---|---|
| Planning Department Main Number<br>(Provide development name or location to be routed to correct planner) | (919) 249-3426 |
| Parks, Recreation & Cultural Resources Department<br>Angela Reincke, Parks Planner | (919) 249-7468 |
| Public Works - Transportation<br>Russell Dalton, Senior Transportation Engineer | (919) 249-3358 |
| Water Resources Department<br>Mike Deaton, Stormwater & Utility Engineering Manager<br>Stan Fortier, Senior Engineer (Sedimentation & Erosion Control) | <br>(919) 249-3413<br>(919) 249-1166 |
| Electric Utilities Division<br>Rodney Smith, Electric Technical Services Manager | (919) 249-3342 |

## Providing Input to Town Council:

Each Town Council meeting agenda includes a Public Forum time when anyone is permitted to speak for three (3) minutes on any topic with the exception of items listed as Public Hearings for that meeting. The Town Council meets on the 1st and 3rd Tuesdays of each month at 6:00 p.m. (except for holidays, see schedule of meetings at http://www.apexnc.org/838/Agendas-Minutes). You may also contact Town Council by e-mail at AllCouncil@apexnc.org.

## Private Agreements and Easement Negotiation:

The Town of Apex cannot enforce private agreements between developers and neighbors and is not a party to the easement and right-of-way negotiation that occurs between developers and neighboring property owners for easements or rights-of-way that are necessary to build the project.

It is recommended that all private agreements be made in writing and that if a property owner feels it necessary, they should obtain private legal counsel in order to protect their interests in both private agreements and during easement negotiations. The only conditions that the Town of Apex can enforce are those conditions that are made a part of the conditional zoning of the property by agreement of the developer and the Town.

As an example, if a developer offers to build a fence for a neighbor to mitigate some impact, the Town can only enforce the construction of the fence if the fence becomes a condition of the rezoning. This would occur by the developer offering the condition as part of their conditional zoning application package or at the Town Council public hearing on the conditional zoning and the Town accepting it as a condition. Private agreements regarding a fence being constructed will not be enforced by the Town.

To request that any agreement with a developer is made a part of the conditional zoning at the time of approval, you may ask at the Town Council public hearing if the agreement is included in the conditions. If it is not, you may request that the Town Council not approve the rezoning without the agreement being included in the conditions (note that it is up to Town Council whether to approve or deny the rezoning but they cannot impose conditions that the applicant does not agree to add). The developer's proposed conditions can be viewed any time after a rezoning is submitted on the Interactive Development Map at: http://apexnc.maps.arcgis.com/apps/OnePane/basicviewer/index.html?appid=fa9ba2017b784030b15ef4da27d9e795

## Documentation:

Neighbors to a requested new development and/or rezoning are strongly encouraged to fully document (such as through dated photographs) the condition of their property before any work is initiated for the new development. Stormwater controls installed on developed property are not designed to and will likely not remove 100% of the soil particles transported by stormwater runoff. As a result, creeks and ponds could become cloudy for a period of time after rain events.

# COMMON CONSTRUCTION ISSUES & WHO TO CALL

This document is a public record under the North Carolina Public Records Act and may be published on the Town's website or disclosed to third parties.

**Noise & Hours of Construction:** Non-Emergency Police 919-362-8661

Noise from tree removal, grading, excavating, paving, and building structures is a routine part of the construction process. The Town generally limits construction hours from 7:00 a.m. to 8:30 p.m. so that there are quiet times even during the construction process. Note that construction outside of these hours is allowed with special permission from the Town when it makes more sense to have the construction occur at night, often to avoid traffic issues. In addition, the Town limits hours of blasting rock to Monday through Friday from 8:00 a.m. to 5:00 p.m. Report violations of construction hours and other noise complaints to the Non-Emergency Police phone number at 919-362-8661.

**Construction Traffic:** James Misciagno 919-372-7470

Construction truck traffic will be heavy throughout the development process, including but not limited to removal of trees from site, loads of dirt coming in and/or out of the site, construction materials such as brick and wood brought to the site, asphalt and concrete trucks come in to pave, etc. The Town requires a construction entrance that is graveled to try to prevent as much dirt from leaving the site as possible. If dirt does get into the road, the Town can require they clean the street (see "Dirt in the Road" below).

**Road Damage & Traffic Control:** Water Resources – Infrastructure Inspections 919-362-8166

There can be issues with roadway damage, roadway improvements, and traffic control. Potholes, rutting, inadequate lanes/signing/striping, poor traffic control, blocked sidewalks/paths are all common issues that should be reported to Water Resources – Infrastructure Inspections at 919-249-3427. The Town will get NCDOT involved if needed.

**Parking Violations:** Non-Emergency Police 919-362-8661

Unless a neighbor gives permission, there should be no construction parking in neighbors' driveways or on their property. Note that parking in the right-of-way is allowed, but Town regulations prohibit parking within 15 feet of driveways so as not to block sight triangles. Trespassing and parking complaints should be reported to the Non-Emergency Police phone number at 919-362-8661.

**Dirt in the Road:** James Misciagno 919-372-7470

Sediment (dirt) and mud gets into the existing roads due to rain events and/or vehicle traffic. These incidents should be reported to James Misciagno. He will coordinate the cleaning of the roadways with the developer.

**Dirt on Properties or in Streams:** James Misciagno 919-372-7470
Danny Smith Danny.Smith@ncdenr.gov

Sediment (dirt) can leave the site and get onto adjacent properties or into streams and stream buffers; it is typically transported off-site by rain events. These incidents should be reported to James Misciagno at 919-372-7470 so that he can coordinate the appropriate repairs with the developer. Impacts to the streams and stream buffers should also be reported to Danny Smith (danny.smith@ncdenr.gov) with the State.

**Dust:** James Misciagno 919-372-7470

During dry weather dust often becomes a problem blowing into existing neighborhoods or roadways. These incidents should be reported to James Misciagno at 919-372-7470 so that he can coordinate the use of water trucks onsite with the grading contractor to help control the dust.

**Trash:** James Misciagno 919-372-7470

Excessive garbage and construction debris can blow around on a site or even off of the site. These incidents should be reported to James Misciagno at 919-372-7470. He will coordinate the cleanup and trash collection with the developer/home builder.

**Temporary Sediment Basins:** James Misciagno 919-372-7470

Temporary sediment basins during construction (prior to the conversion to the final stormwater pond) are often quite unattractive. Concerns should be reported to James Misciagno at 919-372-7470 so that he can coordinate the cleaning and/or mowing of the slopes and bottom of the pond with the developer.

**Stormwater Control Measures:** Mike Deaton 919-249-3413

Post-construction concerns related to Stormwater Control Measures (typically a stormwater pond) such as conversion and long-term maintenance should be reported to Mike Deaton at 919-249-3413.

**Electric Utility Installation:** Rodney Smith 919-249-3342

Concerns with electric utility installation can be addressed by the Apex Electric Utilities Department. Contact Rodney Smith at 919-249-3342.

# NEIGHBORHOOD MEETING SIGN-IN SHEET

This document is a public record under the North Carolina Public Records Act and may be published on the Town's website or disclosed to third parties.

Meeting Address: Remote Zoom Meeting -- https://us02web.zoom.us/j/86452781121

Date of meeting: December 15, 2020 Time of meeting: 5:00 pm

Property Owner(s) name(s): Lidl US Operations, LLC

Applicant(s): Isabel Worthy Mattox, Mattox Law Firm

Please print your name below, state your address and/or affiliation with a neighborhood group, and provide your phone number and email address. Providing your name below does not represent support or opposition to the project; it is for documentation purposes only.

| | NAME/ORGANIZATION | ADDRESS | PHONE # | EMAIL | SEND PLANS & UPDATES |
|---|---|---|---|---|---|
| 1. | Isabel Worthy Mattox<br>Mattox Law Firm | [redacted] | | | |
| 2. | Matthew J. Carpenter<br>Mattox Law Firm | | | | |
| 3. | Rick Baker<br>Timmons Group | | | | |
| 4. | Tim Morgan<br>Evergreen Construction | | | | |
| 5. | Diana Londono | | | | Y |
| 6. | Tonya Headen-Lee | | | | Y |
| 7. | Mike Herbert | | | | Y |
| 8. | Paul Dewey | | | | Y |
| 9. | Becky Ellet | | | | Y |
| 10. | Joanne Flayhart | | | | Y |
| 11. | Mark Wyman | | | | Y |
| 12. | Michael Sumney | | | | Y |
| 13. | Mike Herbert | | | | Y |
| 14. | Tom Hall | | | | Y |

*Use additional sheets, if necessary.*

# NEIGHBORHOOD MEETING SIGN-IN SHEET

This document is a public record under the North Carolina Public Records Act and may be published on the Town's website or disclosed to third parties.

Meeting Address: Remote Zoom Meeting -- https://us02web.zoom.us/j/86452781121

Date of meeting: December 15, 2020 Time of meeting: 5:00 pm

Property Owner(s) name(s): LIDL US Operations, LLC

Applicant(s): Isabel Worthy Mattox, Mattox Law Firm

Please print your name below, state your address and/or affiliation with a neighborhood group, and provide your phone number and email address. Providing your name below does not represent support or opposition to the project; it is for documentation purposes only.

| | NAME/ORGANIZATION | ADDRESS | PHONE # | EMAIL | SEND PLANS & UPDATES |
|---|---|---|---|---|---|
| 1. | Steve Martin | | | | Y |
| 2. | Donald Thomas | | | | Y |
| 3. | Kenneth Muzzillo | | | | |
| 4. | | | | | |
| 5. | | | | | |
| 6. | | | | | |
| 7. | | | | | |
| 8. | | | | | |
| 9. | | | | | |
| 10. | | | | | |
| 11. | | | | | |
| 12. | | | | | |
| 13. | | | | | |
| 14. | | | | | |

*Use additional sheets, if necessary.*

# AFFIDAVIT OF CONDUCTING A NEIGHBORHOOD MEETING, SIGN-IN SHEET AND ISSUES/RESPONSES SUBMITTAL

This document is a public record under the North Carolina Public Records Act and may be published on the Town's website or disclosed to third parties.

I, Isabel Worthy Mattox, do hereby declare as follows:
Print Name

1. I have conducted a Neighborhood Meeting for the proposed Rezoning, Major Site Plan, Master Subdivision Plan, or Special Use Permit in accordance with UDO Sec. 2.2.7 *Neighborhood Meeting*.

2. The meeting invitations were mailed to the Apex Planning Department, all property owners within 300 feet of the subject property and any neighborhood association that represents citizens in the area via first class mail a minimum of 10 days in advance of the Neighborhood Meeting.

3. The meeting was conducted at Remote Zoom Meeting (location/address) on December 15, 2020 (date) from 5:00 pm (start time) to 7:00 pm (end time).

4. I have included the mailing list, meeting invitation, sign-in sheet, issue/response summary, and zoning map/reduced plans with the application.

5. I have prepared these materials in good faith and to the best of my ability.

12-16-20
Date

By: _____

STATE OF NORTH CAROLINA
COUNTY OF WAKE

Sworn and subscribed before me this the 16th day of December, 2020 by Isabel Worthy Mattox.

SEAL

MARY L. GALECKI
Notary Public, North Carolina
Franklin County
My Commission Expires
July 09, 2025

Mary L. Galecki
Notary Public

Mary L. Galecki
Print Name

My Commission Expires: July 9, 2025

## EXHIBIT B - Certified List of Neighboring Property Owners

0732927220
GLEN ARBOR TOWNEHOME OWNERS ASSOCIATION INC
R S FINCHER & CO
315 S SALEM ST
APEX NC 27502-1863

0732929079
STULTZ, CHRISTOPHER NEAL
GALEYEVA, OLGA
800 BRISTOL BLUE ST
APEX NC 27502-4115

0742010933
HARRIS, BELINDA WOODARD
715 BRISTOL BLUE ST
APEX NC 27502-4114

0742011877
HITTNER, SUSAN
709 BRISTOL BLUE ST
APEX NC 27502-4114

0742011902
PITTNER, STEVE T
PITTNER, HEIDI K
713 BRISTOL BLUE ST
APEX NC 27502-4114

0742012959
VIZCAINO, ANDRES VINA LONDONO
ZULUAGA, DIANA KARIME
601 LONGTON HALL CT
APEX NC 27502-4108

0742013841
RIEBER, JOHN W
RIEBER, MICHELLE E
706 BRISTOL BLUE ST
APEX NC 27502-4138

0742013868
MUZZILLO, KENNETH
MUZZILLO, GINA
602 LONGTON HALL CT
APEX NC 27502-4108

0742014840
HARMON, THOMAS
HARMON, LETICIA
607 N COALPORT DR
APEX NC 27502-4107

0742014942
MUZZILLO, KENNETH
MUZZILLO, GINA
602 LONGTON HALL CT
APEX NC 27502-4108

0742015848
HALL, MURREY T III
608 N COALPORT DR
APEX NC 27502-4106

0742016810
HERNANDEZ, LORI L
606 N COALPORT DR
APEX NC 27502-4106

0742018833
UNITED STATES POSTAL SERVICE
PO BOX 8601
PHILADELPHIA PA 19197-0001

0742020059
VANGORDER, RYAN
VANGORDER, ANGELA
716 BRISTOL BLUE ST
APEX NC 27502-4113

0742020203
SMAILES, ROBERT PATRICK
1006 ARBOR VALLEY LN
APEX NC 27502-3936

0742020243
BRIDGERS, JEAN B
1008 ARBOR VALLEY LN
APEX NC 27502-3936

0742020273
IREALTY LLC
2054 KILDAIRE FARM RD STE 318
CARY NC 27518-6614

0742020309
FLAYHART, JOANNE M
1001 ARBOR VALLEY LN
APEX NC 27502-3937

0742020328
MURRAY, MARISA CHRISTINE
1003 ARBOR VALLEY LN
APEX NC 27502-3937

0742020357
MEEKS, BARBARA H
DENNIS, TANYA
1005 ARBOR VALLEY LN
APEX NC 27502-3937

0742021018
ARSENAULT, GLADYS M
714 BRISTOL BLUE ST
APEX NC 27502-4113

0742021098
VELASQUEZ, CHRISTOPHER D
VELASQUEZ, KRISTEN E
101 NOTTINGHILL WALK
APEX NC 27502-4344

0742021202
SUMNEY, MICHAEL W.
SUMNEY, DEBRA L.
1012 ARBOR VALLEY LN
APEX NC 27502-3936

0742021232
LEE, JENNY C
517 GREENWOOD DR
CARY NC 27511-4648

0742021262
MARTIN, STEPHEN K
MARTIN, JONNIE L
1016 ARBOR VALLEY LN
APEX NC 27502-3936

0742021292
WIX, SUSAN R TRUSTEE
1018 ARBOR VALLEY LN
APEX NC 27502-3936

0742021306
KURIAN, JOICE
KURIAN, BINCY JOICE
105 RUTHWIN DR
MORRISVILLE NC 27560-6799

0742021326
PLUMLY, MICHAEL R
PLUMLY, MARY M
500 WINDSTREAM WAY
CARY NC 27518-9038

0742021356
WHITE, SUSAN H
1011 ARBOR VALLEY LN
APEX NC 27502-3937

0742021559
SPRING ARBOR OF APEX LMTD PRNTSHP
800 HETHWOOD BLVD
BLACKSBURG VA 24060-4207

0742022096
HERBERT, MICHAEL
HERBERT, MICHELLE
603 LONGTON HALL CT
APEX NC 27502-4108

0742022222
MCCORMICK, CECILIA WEI
1020 ARBOR VALLEY LN
APEX NC 27502-3936

0742022252
PANGBURN, EDWARD C
PANGBURN, JANET D
1022 ARBOR VALLEY LN
APEX NC 27502-3936

0742022306
MARGARET T OKEEFFE TRUST
1013 ARBOR VALLEY LN
APEX NC 27502-3937

0742022335
FU, SHUJUN
MU, LILI
1605 S 8TH ST
ALHAMBRA CA 91803-3416

0742022366
LEROUX ENTERPRISES LLC
1017 ARBOR VALLEY LN
APEX NC 27502-3937

0742023077
SEEGER, JANE F
605 LONGTON HALL CT
APEX NC 27502-4108

0742024094
THOMAS, DON E
THOMAS, GWEN L
604 LONGTON HALL CT
APEX NC 27502-4108

0742025548
UKRAINIAN AMERICAN SOCCER ASSN INC
WALGREENS CO
300 WILMOT RD
DEERFIELD IL 60015-4614

0742026247
LIDL US OPERATIONS LLC
HQ REAL ESTATE DEPARTMENT
3500 S CLARK PL
ARLINGTON VA 22202-4033

0742028991
WIDEWATERS IX APEX CO LLC
WALGREENS CO
PO BOX 1159
DEERFIELD IL 60015-6002

0742111997
JONES FAMILY PROPERTIES OF APEX LLC
PO BOX 945
APEX NC 27502-0945

0742112920
LEGAL VENTURE LLC
510 W WILLIAMS ST
APEX NC 27502-1846

0742120376
SCI NORTH CARLINA FUNERAL SERVICES
LLC
1929 ALLEN PKWY
HOUSTON TX 77019-2506

0742120376
MCIVER FAMILY HOLDINGS, LLC
PO BOX 130548
HOUSTON TX 77219-0548

0742121986
WAKE COUNTY
WAKE CO ATTORNEYS OFFICE
PO BOX 550
RALEIGH NC 27602-0550

0742123010
BEAVERS OFFICE PARK CONDOS
PWA
1146 EXECUTIVE CIR
CARY NC 27511-4526

# SUMMARY OF DISCUSSION FROM THE NEIGHBORHOOD MEETING

This document is a public record under the North Carolina Public Records Act and may be published on the Town's website or disclosed to third parties.

Property Owner(s) name(s): LIDL US Operations, LLC

Applicant(s): Isabel Worthy Mattox, Mattox Law Firm

Contact information (email/phone): _____

Meeting Address: Remote Zoom Meeting -- https://us02web.zoom.us/j/86452781121

Date of meeting: December 15, 2020 Time of meeting: 5:00 pm

Please summarize the questions/comments and your response from the Neighborhood Meeting in the spaces below (attach additional sheets, if necessary). Please state if/how the project has been modified in response to any concerns. The response should not be "Noted" or "No Response". There has to be documentation of what consideration the neighbor's concern was given and justification for why no change was deemed warranted.

Question/Concern #1:

See Questions/Concerns attached as Exhibit D.

Applicant's Response:

Question/Concern #2:

Applicant's Response:

Question/Concern #3:

Applicant's Response:

Question/Concern #4:

Applicant's Response:

**EXHIBIT D**
to
Town of Apex – PD Plan/PUD-CZ Petition
Property: 0 W. Williams Street, Apex, NC 27502

**QUESTIONS FOR APEX REZONING NEIGHBORS MEETING**

- What is the setback from the adjacent homes? 20 feet?

  ***We propose a 40- Type A buffer adjacent to single family homes and a 20' Type B buffer adjacent to townhomes.***

- What will be done with the two existing ponds on the property?

  ***There are a sedimentation area and a stormwater pond serving the Walgreens property. Those will be incorporated into underground stormwater detention.***

- What protections are there for the adjacent homeowners from light, water, sound, and air pollution?

  ***Light fixtures will be directed downward to avoid light trespass. Stormwater flowing from the property will be initially stored underground and filtered (probably through a sand filter) before being released to adjoining properties. We do not expect any significant noise to be generated by this senior development, probably much less than some uses such as restaurants which are permitted under the existing zoning. We also do not expect this development to cause air pollution. There will be significantly lower traffic generated than from uses under existing zoning.***

- What went into the decision of where to place the building?

  ***Building placement shown on graphic is not final, but considerations include: driveway access points, Apex requirement to place most parking on the side of or behind the building.***

  - Why does the building not back up to Walgreens instead?
    ***Driveway access points***
  - Has a noise study been done?
    ***No, but we do not expect any significant noise to be generated by this senior development, probably much less than some uses such as restaurants which are permitted under the existing zoning.***

- Dumpster location?

  ***Location on graphics are not final, but we need to locate where a truck can adequately maneuver. Also keep in mind that the dumpster will be enclosed and landscaping will be required around the enclosure.***

**Site Plan**:

- What are the specific elevations for the building, parking lot, dumpster pad, and driveways?

  ***We have not done a grading study and cannot give accurate site elevations for improvements.***

- Will there be a retaining wall? If so, how tall and what at the details of the location and size?

  ***Given the grades, there will very likely be one or more retaining walls but we do not know the height at this time.***

- How will storm water run off be managed? - it is already a significant issue without development at this time.

  ***Stormwater will be managed through an underground detention system which collects runoff, filters and releases over a period of time.***

- How will the existing creek/stream be addressed as it currently runs under the proposed building location?

  ***Our information indicates that the stream ends before it reaches the building location. We will have the stream delineated by the NC Division of Water Quality and the US Army Corps of Engineers. If a protected stream is in the proposed building location, we will need to relocate the building.***

- How will protected natural areas be preserved with proposed development?

  ***We will maintain buffers along the south and west borders. These will be maintained by the Owner.***

**Traffic:**

- Is Walgreens Corporation and the local site aware of the dependency of access through their parking lot from this proposed development?

  ***Yes we believe they were aware and recorded access agreements in their development.***

- Have current traffic studies been done assessing the large amount of traffic along this section of W. Williams which already impinges upon Amhurst, postal office, and church traffic, especially for a left turn? How will the increased traffic of up to 126 additional vehicles be addressed? (84 units x 1.5 parking spaces on design plan).

***Project engineer Timmons Group has prepared a Trip Generation Report for this site and our proposed use. It indicates that traffic from this site will be significantly less than what could be developed on site under the current zoning***

- How does the proposed development plan to address traffic concerns, including future widening of W. Williams and the proposed dividing median which would run in front of this property?

***Access will be through joint access drive with Walgreens. There will not be additional access point on Williams. There are likely to be road dedication and/or improvement requirements with this development***.

**Rezoning Issues:**

- What specifically is the rezoning proposal? Documents received reference changing it from PUD-CU to PUD-CU. However, there is currently a booklet of all the details applicable to the current zoning for the site. Multifamily or residential of any kind is not currently allowed anywhere within the present zoning uses. This is a significant change being requested without any prior communication or collaboration with the adjoining property owners.

***The rezoning request has not been filed. This is the very beginning of the process. We want to engage with you tonight and in the future to hear your concerns and suggestions. We will file the rezoning request to allow multifamily development.***

- Use of the land was to be limited to office hours for any structure located along residential property lines and other structures would be businesses such as restaurants or coffee shop that would close overnight providing neighboring residents privacy and quiet enjoyment of their property. How will proposed development address car and people noise, lights, and 24/7 residential living adjacent to property owners?

***Although residential is a 24 hour use, we do not believe a senior affordable development will generate significant noise, traffic or activity at night time. The current zoning allowed restaurants and retail/service uses which would be far noisier and would generate significantly more traffic***.

- Proposed building significantly exceeds current approved building square footage. How is this addressed in the rezoning application?

***When you add all the building footprint areas together, they may not be significantly more than the footprint we propose.***

- Would the current detailed PUD-CU zoning with use and development restrictions be replaced as a whole with the new proposed zoning? If so, is the developer willing to work with property owners to address buffers, landscape screening, storm water runoff, lighting, dumpster noise, and other currently protected right for adjacent property owners?

***We are changing the PUD only with respect to the subject tract. The remainder of the PUD zoning will stay as is. We absolutely want to work with property owners to address development issues and concerns***.

- Who would be responsible for maintaining buffer areas?

***The property owner who will be Evergreen which develops, manages and continues to own its developments***.

- How does a 3 story large residential building on this lot meet current zoning for property in this area? The height profile for most commercial structures, especially in this immediate area, is one story with the exception of the church.

  ***We are requesting rezoning to allow more height. As our area grows and land becomes more scarce we must grow up to accommodate our growing communities.***

- What is the next step after this call? Who will be the contact? What rights do the adjacent property owners have? What is the detail or date of next step?

  After this call we will work to complete our rezoning application which we plan to file before January 4. Then there will be a period of Staff review. If things go according to schedule, we would go to the Planning Board on March 8, 2021 and to Town Council on March 23, 2021. You have the right to appear at either of these public meetings and to speak at those meetings.

**Senior Living Development:**

- Applicants must be 55+. Would residents be allowed to have other under 55 residents living with them, including young and school age children? Is there a maximum number of residents per unit and how is that enforced?

  ***Yes applicants can have a younger spouse or companion --the minimum age is 45 for someone living with a resident over 55. The limit is 2 people per bedroom plus an additional person but our typical resident is single and about 65 years old.***

- Will all 84 units be offered at below market rates or subsidized to meet affordable criteria?

  ***Yes at 30%, 40%. 50% and 60% or Annual Median Income***

- Who will manage, approve applicants, and maintain the facility?

  ***The property owner who will be Evergreen which develops, manages and continues to own its developments. It will screen applicants and maintain the facility.***

- What percentage of rental units will be 1 bedroom or 2 bedroom?

  ***Approximately 50% 1-BR and 50% 2- BR.***

- What is the breakdown of the economic affordability that will be used, and how many units will apply at each % of medium area income for Wake Co.?

  ***Approximately 21 units at 30%, 12 units at 40%, 8 units at 50% and 43 units at 60% of Annual Median Income.***

- Will a bus stop or other public transportation be placed near or on the property?

  ***We think that is likely.***

**Affordable Housing:**

- Is it a conflict of interest that the developer on this proposed application is also a Steering Committee member of the Apex Affordable Housing Plan? (Timothy Morgan, Evergreen Construction Co.)

  ***Tim Morgan was asked to serve on the Apex Committee because of his knowledge of affordable housing development. He has also served with similar groups in Raleigh and ____. He has no part in the process of approval of rezoning cases. We do not see this as a conflict.***

- Has any funding to assist with this development already been secured? If so, how much and through which agencies?

  ***No funding has been secured, but we will apply to NCHFA for tax credits and to Wake County for financing.***

- Why this site verses other options within the broader community? The one existing Affordable Housing development in Apex is a 72 unit complex of 2 and 3 bedroom units built by DHIC at 610 Upchurch Street which is less than 1 mile south off of W. Williams Street. All of these units are offered at less than 50% of median area income.

  ***The existing DHIC development is a family development and does not serve the senior population that our development will serve.***

- Currently their is a development plan that has been funded and approved to be built by DHIC known as Broadstone Walk across from Cambridge Village senior center. The information on this project shows 2 phases, with the first being 72 units for families and a second phase targeted for senior living. This development would be approximately 1.7 miles south from this proposed site. Could this development at the corner of S. Hughes and Apex Peakway address the need for affordable senior housing?

  ***The proposed development which had included a senior component was not approved by NCHFA. It has now been changed to 100% family. So neither of these developments is the same as ours which is an entirely senior development.***

- Are their state and local requirements that exist to prevent the clustering of affordable housing in close proximity to one another? Based on the distances of the 2 developments mentioned above, a problem with clustering would seem to exist with this rezoning proposal.

  ***There are sometimes local requirements (but not in Apex) promulgated to reduce overconcentration of affordable housing, however those would not apply where a family and senior development are in the same area.***

# Town of Apex – PD Plan/PUD-CZ Petition
# Property: 0 W. Williams Street, Apex, NC 27502
# Response to Staff Comments – Review No. 1 (1-22-2021)

Petition No. 21CZ02 Abbey Spring

## PD PLAN TEXT
### Section 1: Table of Contents

**TABLE OF CONTENTS**


Section 1: Table of Contents
Section 2: Vicinity Map Project
Section 3: Data Purpose
Section 4: Statement Permitted
Section 5: Uses
Section 6: Design Controls
Section 7: Architectural Standards
Section 8: Parking and Loading
Section 9: Signs
Section 10: Natural Resource and Environmental Data
Section 11: Stormwater Management
Section 12: Parks and Recreation
Section 13: Public Facilities
Section 14: Phasing
Section 15: Consistency with Land Use Plan
Section 16: Compliance with the UDO

**PD PLAN TEXT**
**Section 3: Project Data**

| | |
|---|---|
| Name of the Project: | Abbey Spring (Affordable Senior Apartments) |
| Prepared By: | Isabel Worthy Mattox<br>Mattox Law Firm<br>PO Box 946<br>Raleigh, NC 27602<br><br>Rick Baker, PE<br>Project Engineer<br>Timmons Group<br>5410 Trinity Road, Suite 102<br>Raleigh, NC 27607<br><br>Becky Bascom Kelly, RA<br>Project Architect<br>Tightlines Designs<br>19 W. Hargett Street, Suite 501<br>Raleigh, NC 27601 |
| Property Owner: | Lidl US Operations, LLC<br>HQ Real Estate Department<br>3500 S. Clark Street<br>Arlington, VA 22202-4033 |
| Contract Purchaser: | Evergreen Construction Company<br>c/o Tim Morgan<br>7706 Six Forks Road<br>Raleigh, NC 27615 |
| Existing Zoning: | PUD-CZ (02CU13) |
| Proposed Zoning: | PUD-CZ |
| Current land use designation: | Mixed Use, including office and retail |
| Proposed land use designation: | High Density Residential/Commercial Services |
| Area of Tract: | 5.01 acres |
| Area Proposed as Non-Residential*: | 0 acres |
| Area Proposed as Residential: | 5.01 acres (across two phases) |
| Percent Proposed as Non-Residential: | 0% |
| Percent Proposed as Residential: | 100% |

## PD PLAN TEXT
## Section 4: Purpose Statement

**Purpose Statement**
(explain how this project meets the Development Parameters found in UDO Sec. 2.3.4(F)(l)(iv)-(vi).)

Section 2.3.4(F)(l)(iv) – The proposed development will provide for the connection of land uses through a variety of modes including pedestrian and bicycle facilities, roadway improvements and other facilities. The project will conform to the requirements of the Apex Transportation Plan by constructing or improving connecting roadways and/or driveways between Williams Street (Hwy 55) and Olive Chapel Road. The proposed development will offer a pedestrian connection between the proposed multifamily residential and (i) the adjacent Walgreen's retail development to the north and (ii) the adjacent United States Postal Service property to the south.

Section 2.3.4(F)(l)(v) – The purpose of the proposed development is to provide much-needed affordable housing for seniors situated in the Town Center area, close to high-quality mixed-use development, itself in close proximity to the intersection of several major transportation thoroughfares. The proposed development will integrate well with existing different land uses in close proximity to the subject site and thereby increases the overall connectivity of the area while providing additional opportunities for use and patronage of the existing land uses, including grocery, pharmacy, restaurants and healthcare providers. Within the development proposal, particular attention will be paid to preserving perimeter buffers while also promoting an internal network of interconnected streets, pedestrian, and bicycle facilities (including bicycle parking).

Section 2.3.4(F)(J)(v) – The proposed residential development is intended to integrate with the existing and planned future development of the area. Appropriate buffers are contemplated to ensure the development is shielded from existing single family and townhouse development. Connection with the adjacent Walgreen's retail property is provided through two vehicular connections and a pedestrian footpath, helping to reduce vehicular trips on public rights-of-way and foster a more walkable environment. In addition, the proposed development will integrate well with existing healthcare providers, including Wake Med-Apex Healthplex, Walgreens and other healthcare providers. In addition, the developer will seek a pedestrian connection to the Glen Arbor Townehome site. The proposed development will maintain the architectural feel and identity of Apex, and enhance adjoining property values by offering a high-quality product that will complement the surrounding area.

## PD PLAN TEXT
## Section 5: Permitted Use

**Residential Uses (Medium and High Density Residential)**

**4.3.1 Residential Uses***

A. Age Restricted Multi-Family or Apartment meeting the federal definition of elderly housing, having at least eighty percent (80%) of the occupied units occupied by at least one person fifty-five (55) or older per unit.

** The allowed residential uses must meet the requirements of the Section 42 of the Internal Revenue Code ("Code") or a substantially equivalent form of affordable rental housing. 100% of the dwelling units developed on the property must meet this requirement. Accordingly, rents shall be set at a price that on average is affordable to a household with an annual income that is no greater than 60% of the Area Median Income for the respectively-sized household in the Raleigh, NC MSA, as determined by the United States Department of Housing and Urban Development (HUD) at the time of move-in.*

## PD PLAN TEXT
## Section 6: Design Controls

**Residential (Medium and High Density Residential)**

Maximum density: 17du/acre

**Maximum Building Height****

Residential three (3) stories; 48 feet

***Certain architectural elements (project identity features, towers, spires, etc.) may surpass this height limit with Town approval as part of the site plan review process.*

**Setbacks**

Residential

| | |
|---|---|
| Vehicle Use Areas: | 5’ from established buffers |
| Buildings: | 5’ from established buffers |

**Buffers**

Street Front Buffers

Williams Street*: A 30’Thoroughfare buffer will be maintained along the frontage of Williams Street located on the eastern boundary of the property.

Perimeter Buffers

South: 40' Type A – adjacent to PINs 0742024094 (Thomas), 0742023077 (Seeger) and 0742022096 (Herbert).

West: 20' Type A – adjacent to PINs 0732927220 (Glen Arbor HOA).

North: A 20’ setback along the common line with the Walgreen’s development

**Impervious Surface**

Amount and percentage of built upon area allowed: Seventy percent (70%)

Amount and percentage of built upon area proposed: Less than seventy percent (<70%)

*[Exact percentage to be determined at site plan stage of development]*

## PD PLAN TEXT
## Section 7: Architectural Standards

The building scale and mass for this multifamily community will reflect the residential scale and character of traditional Apex architecture. Building materials to be used for the apartments shall include a variety and diversity of colors, textures, and features provide a unique character while still maintaining a level of

consistency and compatibility with the Apex style. Further detailing shall be provided at the time of site plan submittal.

The scale of new structures will be appropriate to the building type and will also relate appropriately to adjacent land uses. Apartment structures will be in scale with proposed retail development adjacent to those uses. Height, mass, form and roof configurations will be given particular attention as elements of scale. The main exterior building materials are brick and vinyl lap siding, with accent vinyl vertical siding. Awnings, gable vents, Juliet balconies, a cupola and accent metal roofing will be included to add variation and interest throughout the building. The building design will also feature a rear porch, a porte cochere and a balcony with seating.

Various architectural and landscape street elements will be incorporated to enhance the traditional character and walkability of the community. These elements may include patios, railings, benches, lighting, entry features, lawn areas and open space.

This building will be built to the Energy Star Multifamily New Construction Program standards. This includes items that will be built to a higher standard of efficiency, including: energy efficient lighting and appliances, Energy Star windows, higher resistance envelope insulation (it will be at least R-15 for walls), and higher efficiency HVAC. The design will also include light sensors for exterior lighting and movement sensors for interior common area lighting.

## PD PLAN TEXT
## Section 8: Parking and Loading

A reduction in parking to 1.1 space per dwelling unit is requested.*

** While the proposed development would not technically qualify as Congregate Care, it otherwise being an age-restricted property marketed and leased specifically to seniors is the basis for the request to reduce the parking minimum to 1.1 space per dwelling unit, the approved minimum for Congregate Care facilities. The developer has experienced success with such ratios on other senior projects, for example an approximately 1.1:1 ratio at its Ryan Spring project located in Cary and its Amber Spring project located in Raleigh. In addition 1.1 parking space per unit is the ratio required by NCHFA based on its experience with both legal and practical parking requirements over multiple projects in North Carolina. The developer feels a 1.1:1 ratio at this project would not unduly impact adjacent property owners or residents' lives or their ability to maintain personal transportation at their residence.*

*Further justifying the reduction in parking requirements are (a) a planned transit stop in close walking distance, and (b) provision bicycle parking.*

*It is anticipated that the Town of Apex will install a new bus stop for GoApex Route 1 in front of the United States Post Office on West Williams Street. This is a funded project with designs approved by NCDOT. The approved design includes an amenity pad, bench, and other improvements, with room for a future shelter. If the Town has completed those improvements prior to the completion of the proposed development, the applicant shall construct the following at the new bus stop: shelter, trash receptacle. These improvements would be made within the existing right of way prior to the issuance of a CO for the development.*

*To facilitate a building layout which is ADA accessible and accommodates cross access and environmentally sensitive areas, more than fifty percent (50%) of parking shall be allowed between the building and the street.*

## PD PLAN TEXT
## Section 9: Signs

Signage will comply with all applicable requirements of the UDO.

## PD PLAN TEXT
## Section 10: Natural Resource and Environmental Data

*Watershed:*

The site is within the Upper Beaver Creek Drainage Basin.
The site does not contain a FEMA designated 100-year floodplain.

*Stream and Buffers:*

The delineation of wetlands and riparian buffers were completed by Town of Apex Water Resource Department on February 25, 2021. In accordance with the Town of Apex Stream Buffer Report dated February 26, 2021 and Section 6.1.11 of the Town UDO, a stream classification of S1A has been determined requiring a 50' stream buffer. Applicant has submitted a revised site plan delineating the 50' stream buffer located at the southern boundary line of the site.

*RCA Requirements:*

PUD-CZ #02CU13 provided for 2.29 acres of RCA over the entire 13.28- acre PUD covered by that case. A significant portion of the RCA (approximately 62,000 square feet) was provided on the subject property. The Applicant will maintain at least 62,162 square feet (1.45 acres) of RCA, consistent with UDO Section 8.1.2.B.1.i., to include any areas that are disturbed to be replanted and counted as RCA.

*Historic Structure:*

The site does not contain any historic structures as defined by UDO Section 12.2 "Historic Structure".

*Planting and Landscaping and other Environmental Issues:*

Biodiversity. The project will promote biodiversity through: (i) planting pollinator-friendly flora; and planting native flora.

Green Infrastructure. The project will provide diverse and abundant pollinator and bird food sources (e.g., nectar, pollen, and berries from blooming plants) that bloom in succession from spring to fall.

Gardens. The development will include a community garden and/or a native pollinator demonstration garden.

Drought Resistance. The development will include landscaping that requires less irrigation and chemical use and warm season grasses that facilitate drought resistance.

Trees. The development will increase the number of native hardwood tree species to at least 3 species.

Pet Waste Stations. The development will include pet waste stations.

Signage. The development will include signage identifying environmentally sensitive areas.

**PD PLAN TEXT**
**Section 11: Stormwater Management**

The post development on-site storm water discharge rate for the apartment development shall not exceed the pre-development rate. Quantity measures for stormwater management will be designed to the 1-year, 24-hour and the 10-year, and 25-year, 24-hour design storms. Stormwater management for the entire site will be managed through the use of above ground or underground Stormwater Control Measures (SCMs) to achieve both quantity and quality requirements. The preferred standard of care and use of approved SCMs shall be taken with regard to erosion control and assurance of storm water quality. Currently there is a stormwater pond serving the adjacent Walgreen's development to the north. It is anticipated that the proposed development will include a shared SCM which will serve both the Walgreen's store and this site.

In addition, the project proposes the installation of signage near SCMs, whether above ground or underground in order to: (i) reduce pet waste; and (ii) eliminate fertilizer near SCM drainage areas.

**PD PLAN TEXT**
**Section 12: Parks and Recreation**

The property is located close to Apex Jaycee Park and Beaver Creek Greenway. The project will pay a fee-in-lieu of dedication of park space unless such fee is waived. In addition, current site plan contemplates a large, flat, multiuse lawn area to serve the development as well as outdoor patio areas and an indoor fitness center.

The Parks, Recreation and Cultural Resources Advisory Commission reviewed the Abbey Spring project at the regular meeting on February 24, 2021. The Commission made a unanimous recommendation for a fee-in-lieu of dedication.

**PD PLAN TEXT**
**Section 13: Public Facilities**

Sanitary Sewer:

The proposed development will connect to the existing public sewer line located in the right-of-way of Williams Street.

Water Systems:

The proposed development will be served by an existing water main located within Williams Street. Proposed water mains will extend through the subject property to provide water service and fire protection to the future development.

Roadways:

The site enjoys good access to both Williams Street and Olive Chapel Road through joint access drives through the Walgreen's development to the north. An additional southbound lane and a 10' pedestrian path will be added along W. Williams Street as a part of the apartment development. Another pedestrian

path will be constructed to connect the proposed apartments with the Walgreen's property. Where public streets are proposed or required, the streets will be designed to Town of Apex public road standards. The proposed development roadway layout is in accordance with the proposed Apex Transportation Plan. The proposed plan is below the traffic volume thresholds that would otherwise require a traffic impact analysis by the Town of Apex. Proposed access to the public street(s) and associated improvements is subject to review and approval by the Town of Apex and NCDOT at the time of site plan submittal. The site plan shall provide right of way dedication along West Williams Street in accordance with Advance Apex. See attached Trip Generation Report. In addition, we are aware of the NCDOT Project U-2901 – NC 55 Widening Project and the Project's current construction delays.

A 24' vehicular cross-access easement within a 34' driveway construction easement shall be provided from the joint access driveway with Walgreens identified as PIN 0742025548 to the joint property line with the United States Postal Service property to the south identified as PIN 0742 01 8833. The site will be designed to accommodate the possible future extension of a driveway to the adjoining property to the south. No physical cross access improvements will be built as part of the initial development of the property for affordable senior housing. Any parking spaces located within the easement shall count toward parking requirements and any area of the easement outside of the parking lot shall count toward the Resource Conservation Area (RCA) requirement. Any RCA area within the easement, not including buffers, shall not be required to be planted to a specific standard. Any parking spaces removed through the construction of the cross access easement in the future would need to be replaced by the entity installing the cross access easement.

## PD PLAN TEXT
## Section 14: Phasing

The apartment development will be constructed in a single phase.

## PD PLAN TEXT
## Section 15: Consistency with Land Use Plan

The proposed development is consistent with the proposed amended Land Use Plan scheduled to be reviewed by the Planning Board and Town Council in early 2021 and the intent and goals thereof, some of which include the preservation of Apex's character, improved economic health, providing compatibility between new development and existing development; the protection of natural resources; the provision of infrastructure that helps achieve land use and growth management objectives and also promotes pedestrian and bicycle facilities throughout Apex and the efficient circulation of traffic; and (perhaps most notably) providing options for affordable housing.

Apex grew around a transportation center with a mix of residential and commercial uses. Throughout its history, the community has sought to be a self-sufficient center of commerce and a great place to live. The proposed development will continue the pattern of mixed-use development within the Town Center area by locating a high-quality multifamily development within close proximity of existing retail and mixed-use developments, thereby increasing the community's tax base and economic health.

The Project will add another housing option for older and economically disadvantaged citizens. Development will be steered away from the more environmentally sensitive areas on site in order to meet the goal preservation of significant RCAs.

The efficient circulation of traffic will be achieved by the connection of Williams Street and Olive Chapel Road, pedestrian connection between the proposed development and existing retail, and many other transportation facility improvements. In addition, the close proximity to a variety of existing uses will support alternative modes of transportation by placing residents within walking or biking distance of

grocery, pharmacy, restaurants and jobs. A 10’ side path will be constructed along W. Williams Street to improve pedestrian and bicycle connectivity.

Most importantly, the proposed development will bring much-needed affordable housing to the area for seniors. The median housing value in Apex is over $350,000, making homeownership unaffordable for a significant segment of the population. Median rent is over $1,100 per month. It is estimated that over 30% of renters pay more than 35% of their annual income for rent. This leaves fewer dollars available for basic necessities such as food, transportation, education, health care, and other needs. Furthermore, while the housing stock of Apex has been growing in recent years, the focus has primarily been in single-family/townhome uses; there are very few small to medium apartment buildings. The proposed development aligns well with Wake County’s Affordable Housing Plan and will provide economic benefits to the Town of Apex while also providing immediate personal benefits to many senior Apex residents.

## PD PLAN TEXT
### Section 16: Compliance with the UDO

The Project will comply with all other relevant portions of the UDO.

# EVERGREEN - ABBEY SPRING
## A SENIOR LIVING COMMUNITY
## PLANNED UNIT DEVELOPMENT - CONDITIONAL ZONING

**0 W WILLIAMS STREET**
**APEX, WAKE COUNTY, NORTH CAROLINA, 27502**
**PIN(S): 0742026247**

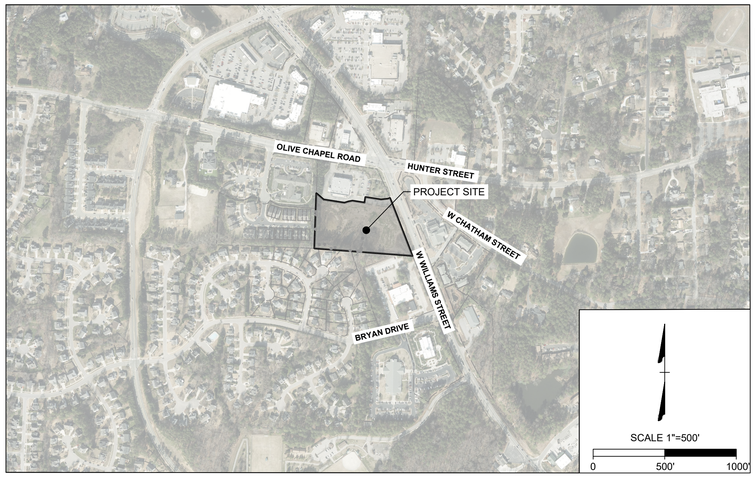


**VICINITY MAP**

**Sheet List Table**

| Sheet Number | Sheet Title |
|---|---|
| C0.0 | COVER SHEET |
| C1.0 | EXISTING CONDITIONS PLAN |
| C2.0 | PUD PLAN |
| C3.0 | UTILITY PLAN |

**SITE DATA TABLE**

| | |
|---|---|
| PROJECT NAME: | EVERGREEN CONSTRUCTION - ABBEY SPRING |
| PROPERTY OWNER: | LIDL US OPERATIONS LLC<br>HQ REAL ESTATE DEPARTMENT<br>3500 S CLARK STREET<br>ARLINGTON, VA 22202 |
| DEVELOPER: | EVERGREEN CONSTRUCTION<br>TIMOTHY MORGAN<br>7706 SIX FORKS ROAD; SUITE 202<br>RALEIGH, NC 27615 |
| PROPERTY ADDRESS: | 0 W WILLIAMS ST, APEX, NC 27502 |
| PIN: | 0742-02-6247 |
| DEED REFERENCE: | DB 16383 PG 2673 |
| PLAT REFERENCE: | BM 2006 PG 2021 |
| EXISTING ZONING: | PUD-CU |
| PROPOSED ZONING: | PUD-CZ |
| EXISTING TRACT SIZE: | 217,944 SF (5.01 AC) |
| EXISTING LAND USE: | VACANT |
| PROPOSED LAND USE: | MULTI-FAMILY |
| CURRENT 2045 LAND USE MAP DESIGNATION: | COMMERCIAL SERVICES |
| PROPOSED 2045 LAND USE MAP DESIGNATION: | HIGH DENSITY MULTI-FAMILY/COMMERCIAL SERVICES ("A") |
| AREA DESIGNATED AS MIXED USE ON 2045 LAND USE MAP: | |
| AREA OF MIXED USE PROPERTY PROPOSED AS NON-RESIDENTIAL DEVELOPMENT: | 0 SF |
| PERCENT OF MIXED USE AREAS PROPOSED AS NON-RESIDENTIAL | 0% |
| HISTORIC STRUCTURE ONSITE: | N/A |
| WATERSHED: | UPPER BEAVER CREEK |
| WATERSHED PROTECTION OVERLAY DISTRICT: | SECONDARY |
| RESOURCE CONSERVATION AREA | |
| MINIMUM REQUIRED: | 62,162 SF |
| PROPOSED: | 62,258 SF |
| BUILDING/STRUCTURE SETBACKS: | |
| FRONT (FROM PRIMARY STREET): | 20' |
| SIDE LOT LINE: | 20' |
| REAR LOT LINE: | 20' |
| PARKING SETBACKS: | 5' FROM ANY BUFFER OR RCA |
| PROPOSED BUILDING INFORMATION: | |
| PROPOSED DWELLING UNITS: | 1-BR UNITS: 42 UNITS<br>2-BR UNITS: 42 UNITS<br>TOTAL: 84 UNITS |
| EXISTING BUILDING FLOOR AREA: | 0 SF |
| PROPOSED BUILDING FLOOR AREA: | 93,311 SF |
| EXISTING AND PROPOSED GROSS SQUARE FOOTAGE OF BUILDINGS: | 93,311 SF |
| PROPOSED BUILDING HEIGHT: | 3-STORIES, 48' |
| PARKING SUMMARY: | |
| AUTO PARKING PROPOSED: | 1.1 SPACES PER UNIT |
| BICYCLE PARKING PROPOSED: | 6 MIN. |

**DEVELOPER:**
**EVERGREEN CONSTRUCTION**
**7706 SIX FORKS ROAD; SUITE 202**
**RALEIGH, NC 27615**
**TIMOTHY G. MORGAN**
**(919) 848-2041**
**TIM@ECCMGT.COM**

**CIVIL ENGINEER:**
**TIMMONS GROUP**
**5410 TRINITY ROAD, STE. 102**
**RALEIGH, NC 27607**
**RICK BAKER, PE**
**(919) 866-4939**
**RICK.BAKER@TIMMONS.COM**

**ARCHITECT:**
**TIGHT LINES DESIGNS**
**19 W. HARGETT STREET, SUITE 501**
**RALEIGH, NC 27601**
**BECKY BASCOM KELLY**
**(919) 834-3600**
**BECKY@TIGHTLINESDESIGNS.COM**

PLAN SHEETS ARE INTENDED FOR ILLUSTRATIVE USE ONLY



PRELIMINARY NOT FOR CONSTRUCTION

THIS DRAWING PREPARED AT THE
**RALEIGH OFFICE**
5410 Trinity Road, Suite 102 | Raleigh, NC 27607
TEL 919.866.4951 FAX 919.833.8124 www.timmons.com

YOUR VISION ACHIEVED THROUGH OURS.

REVISION DESCRIPTION
PER TOWN OF APEX COMMENTS

DATE 02/11/21

DATE 01/08/2021
DRAWN BY T. DAEKE
DESIGNED BY R. BAKER
CHECKED BY R. BAKER
SCALE AS SHOWN

TIMMONS GROUP
NORTH CAROLINA LICENSE NO. C-1652

EVERGREEN - ABBEY SPRING
APEX - WAKE COUNTY - NORTH CAROLINA
COVER SHEET

JOB NO. 42601.008
SHEET NO. C0.0

These plans and associated documents are the exclusive property of TIMMONS GROUP and may not be reproduced in whole or in part and shall not be used for any purpose whatsoever, inclusive, but not limited to construction, bidding, and/or construction staking without the express written consent of TIMMONS GROUP.

x:\32\42601-evergreen_projects\008-332-apex\DWG\Sheet\CD\42601.008-COVR.dwg | Plotted on 2/26/2021 1:27 PM | by Trevor Daeke

SURVEY NOTES

1. ON SITE BOUNDARY, TOPOGRAPHY AND PLANIMETRIC INFORMATION IS TAKEN FROM WAKE COUNTY GIS.
2. ALL DISTANCES SHOWN ON SURVEY ARE HORIZONTAL GROUND DISTANCES UNLESS OTHERWISE NOTED.
3. OTHER SOURCES OF INFORMATION INCLUDE WAKE COUNTY GIS, AERIAL IMAGERY, AND OTHER MAPPING DATA.
4. NOT LOCATED IN FLOOD HAZARD AREA PER FEMA MAPS #3720074200J (05-02-2006).
5. RECORDED PROPERTY DATA:
   5.1. BOOK OF MAPS 2006; PAGE 2021
6. NO KNOWN EXISTING VEGETATION 18" CALIPER OR LARGER LOCATED ONSITE.
7. NO KNOWN UNDERGROUND STORAGE TANKS, HAZARDOUS WASTE AND DEBRIS, SEPTIC TANKS, NOR SIMILAR STRUCTURES LOCATED ONSITE.

PRELIMINARY NOT FOR CONSTRUCTION

THIS DRAWING PREPARED AT THE
**RALEIGH OFFICE**
5410 Trinity Road, Suite 102 | Raleigh, NC 27607
TEL 919.866.4951 FAX 919.833.8124 www.timmons.com

YOUR VISION ACHIEVED THROUGH OURS.

| REVISION DESCRIPTION | DATE |
|---|---|
| PER TOWN OF APEX COMMENTS | 02/11/21 |

DATE: 01/08/2021
DRAWN BY: T. DAEKE
DESIGNED BY: R. BAKER
CHECKED BY: R. BAKER
SCALE: AS SHOWN

TIMMONS GROUP
NORTH CAROLINA LICENSE NO. C-1652

EVERGREEN - ABBEY SPRING
APEX - WAKE COUNTY - NORTH CAROLINA
EXISTING CONDITIONS PLAN

JOB NO. 42601.008
SHEET NO. C1.0

These plans and associated documents are the exclusive property of TIMMONS GROUP and may not be reproduced in whole or in part and shall not be used for any purpose whatsoever, inclusive, but not limited to construction, bidding, and/or construction staking without the express written consent of TIMMONS GROUP.

NAD 83

SCALE 1"=40'
0 40' 80'

PLAN SHEETS ARE INTENDED FOR ILLUSTRATIVE USE ONLY



c:\32\42601-evergreen_projects\008-332-apex\DWG\Sheet\CD\42601.008-EXIS.dwg | Plotted on 2/26/2021 1:27 PM | by Trevor Daeke




PLAN SHEETS ARE INTENDED FOR ILLUSTRATIVE USE ONLY

PRELIMINARY STORMWATER MANAGEMENT PLAN:
PRE-DEVELOPMENT RUNOFF RATE FOR 24 HOUR STORM:

Q = C * I * A

C = 0.27
$I_{1\ YEAR}$ = 0.120 IN/HR
$I_{10\ YEAR}$ = 0.210 IN/HR
$I_{25\ YEAR}$ = 0.249 IN/HR
A = 5.01 AC

$Q_{1\ YEAR}$ = 0.163 CFS
$Q_{10\ YEAR}$ = 0.284 CFS
$Q_{25\ YEAR}$ = 0.337 CFS

THE POST-DEVELOPMENT RATE OF ON-SITE STORMWATER DISCHARGE WILL NOT EXCEED PRE-DEVELOPMENT LEVELS PER UDO SEC. 6.1.7.

A SHARED SCM WILL BE DESIGNED FOR THE PROPOSED SITE AND THE PROPERTY PIN #0742025548 (CURRENTLY WALGREENS). DESIGN CRITERIA TO BE DETERMINED BY DISCUSSION WITH TOWN OF APEX STAFF.

ENVIRONMENTAL ADVISORY BOARD (EAB) COMMITMENTS:

1. BIODIVERSITY. THE PROJECT WILL PROMOTE BIODIVERSITY THROUGH: (I) PLANTING POLLINATOR-FRIENDLY FLORA; AND PLANTING NATIVE FLORA.
2. GREEN INFRASTRUCTURE. THE PROJECT WILL PROVIDE DIVERSE AND ABUNDANT POLLINATOR AND BIRD FOOD SOURCES (E.G., NECTAR, POLLEN, AND BERRIES FROM BLOOMING PLANTS) THAT BLOOM IN SUCCESSION FROM SPRING TO FALL.
3. GARDENS. THE DEVELOPMENT WILL INCLUDE A COMMUNITY GARDEN AND/OR A NATIVE POLLINATOR DEMONSTRATION GARDEN.
4. DROUGHT RESISTANCE. THE DEVELOPMENT WILL INCLUDE LANDSCAPING THAT REQUIRES LESS IRRIGATION AND CHEMICAL USE AND WARM SEASON GRASSES THAT FACILITATE DROUGHT RESISTANCE.
5. TREES. THE DEVELOPMENT WILL INCREASE THE NUMBER OF NATIVE HARDWOOD TREE SPECIES TO AT LEAST 3 SPECIES
6. WATER QUALITY. INSTALL SIGNAGE NEAR ENVIRONMENTAL SENSITIVE AREAS IN ORDER REDUCE PET WASTE AND ELIMINATE FERTILIZER.
7. WASTE REDUCTION. INSTALL PET WASTE STATION(S)

HATCH LEGEND

RESOURCE CONSERVATION AREA

PRELIMINARY NOT FOR CONSTRUCTION


THIS DRAWING PREPARED AT THE
**RALEIGH OFFICE**
5410 Trinity Road, Suite 102 | Raleigh, NC 27607
TEL 919.866.4951 FAX 919.833.8124 www.timmons.com


YOUR VISION ACHIEVED THROUGH OURS.

| REVISION DESCRIPTION | DATE |
|---|---|
| PER TOWN OF APEX COMMENTS | 02/11/21 |

DATE: 01/08/2021
DRAWN BY: T. DAEKE
DESIGNED BY: R. BAKER
CHECKED BY: R. BAKER
SCALE: AS SHOWN

# TIMMONS GROUP

NORTH CAROLINA LICENSE NO. C-1652

## EVERGREEN - ABBEY SPRING

APEX - WAKE COUNTY - NORTH CAROLINA

PUD PLAN

JOB NO. 42601.008
SHEET NO. C2.0


These plans and associated documents are the exclusive property of TIMMONS GROUP and may not be reproduced in whole or in part and shall not be used for any purpose whatsoever, inclusive, but not limited to construction, bidding, and/or construction staking without the express written consent of TIMMONS GROUP.





s:\332\42601-evergreen_projects\008-332-apex\DWG\Sheet\CD\42601.008-SITE.dwg | Plotted on 2/26/2021 1:27 PM | by Trevor Daeke

## UTILITY NOTES

1. PROJECT TO BE SERVED BY TOWN OF APEX WATER, SEWER, AND ELECTRIC.
2. NO WATER AND SEWER EASEMENTS ARE EXPECTED.
3. ELECTRIC EASEMENTS TO BE PROVIDED AS REQUIRED FOR SERVICE.




PLAN SHEETS ARE INTENDED FOR ILLUSTRATIVE USE ONLY



PRELIMINARY NOT FOR CONSTRUCTION

THIS DRAWING PREPARED AT THE
**RALEIGH OFFICE**
5410 Trinity Road, Suite 102 | Raleigh, NC 27607
TEL 919.866.4951 FAX 919.833.8124 www.timmons.com

YOUR VISION ACHIEVED THROUGH OURS.

| DATE | REVISION DESCRIPTION |
|---|---|
| 02/11/21 | PER TOWN OF APEX COMMENTS |
| 02/26/21 | SHEET ADDED PER TOWN OF APEX COMMENTS |

DATE: 01/08/2021
DRAWN BY: T. DAEKE
DESIGNED BY: R. BAKER
CHECKED BY: R. BAKER
SCALE: AS SHOWN

# TIMMONS GROUP

NORTH CAROLINA LICENSE NO. C-1652

## EVERGREEN - ABBEY SPRING

APEX - WAKE COUNTY - NORTH CAROLINA

## UTILITY PLAN

JOB NO. 42601.008
SHEET NO. C3.0

These plans and associated documents are the exclusive property of TIMMONS GROUP and may not be reproduced in whole or in part and shall not be used for any purpose whatsoever, inclusive, but not limited to construction, bidding, and/or construction staking without the express written consent of TIMMONS GROUP.

c:\32\42601-evergreen_projects\008-332-apex\DWG\Sheet\CD\42601.008C-UTIL.dwg | Plotted on 2/26/2021 1:28 PM | by Trevor Daeke

The following trip generation information is for the proposed residential development to be constructed in Apex, NC.

The site-generated trips shown in **Table 1** and **2** are based on trip generation information provided in the 10th Edition of the Institute of Transportation Engineer's (ITE's) *Trip Generation Manual* and compare the construction of 84 attached age restricted apartments with the proposed land uses that can be constructed under existing zoning (24,000 square-foot (SF) medical office building, 6,800 SF commercial, and 3,000 SF restaurant with drive-through window). The residential trip generation was calculated using the proposed number of units as the independent variable where the commercial was calculated using the proposed square-footages as the independent variable. The provided equation was used to generate trips for the apartments and shopping center land uses where the provided rate was used to generate trips for the medical office building and fast-food restaurant (per NCDOT standards).

**Table 1: Trip Generation Summary**
**Senior Apartment Units**

| ITE Land Use Code | Independent Variable | Daily | | | AM Peak Hour | | | PM Peak Hour | | |
|---|---|---|---|---|---|---|---|---|---|---|
| | | In | Out | Total | In | Out | Total | In | Out | Total |
| 252 – Senior Adult Housing - Attached | 84 Units | 156 | 156 | 312 | 6 | 11 | 17 | 12 | 10 | 22 |

SOURCE: Institute of Transportation Engineers' *Trip Generation Manual* 10th Edition (2017)

As shown in **Table 1**, AM peak hour trips generated totaled 6 incoming and 11 outgoing where PM peak hour trips totaled 12 incoming and 10 outgoing. Average daily traffic (ADT) volumes generated by the development totaled 312 vehicles per day (VPD).

**Table 2 Trip Generation Summary**
**Existing Zoning Land Uses**

| ITE Land Use Code | Independent Variable | Daily | | | AM Peak Hour | | | PM Peak Hour | | |
|---|---|---|---|---|---|---|---|---|---|---|
| | | In | Out | Total | In | Out | Total | In | Out | Total |
| 720 – Medical-Dental Office Building | 24,000 SF | 417 | 418 | 835 | 52 | 15 | 67 | 23 | 60 | 83 |
| 820 – Shopping Center | 6,800 SF | 483 | 483 | 966 | 96 | 59 | 155 | 35 | 39 | 74 |
| 934 – Fast-Food Restaurant with Drive-Through Window | 3,000 SF | 706 | 707 | 1413 | 61 | 60 | 121 | 51 | 47 | 98 |
| Subtotal | | 1606 | 1608 | 3214 | 209 | 134 | 343 | 109 | 146 | 255 |
| Pass-Bys (820 – 34% PM / 934 – 49% AM & 50% PM) | | -- | -- | -- | 30 | 29 | 59 | 37 | 37 | 74 |
| Total | | 1606 | 1608 | 3214 | 179 | 105 | 284 | 72 | 109 | 181 |

SOURCE: Institute of Transportation Engineers' *Trip Generation Manual* 10th Edition (2017)

Per **Table 2**, prior to trip reductions due to pass-bys, AM peak hour trips generated totaled 209 incoming and 134 outgoing where PM peak hour trips totaled 109 incoming and 146 outgoing. ADT volumes generated by the development totaled 3,214 vehicles per day. Per NCDOT standards and procedures, pass-by percentages were applied to the projected traffic volumes for the shopping center and fast-food developments. A pass-by percentage of 34% was applied to the PM peak hour traffic for land use code (LUC) 820. Pass-by percentages of 49% and 50% were applied to the AM and PM peak hour traffic for LUC 934, respectively. Following all reductions, trips totaled 179 incoming and 105 outgoing AM peak hour trips and 72incoming



5410 Trinity Rd. Suite 102 | Raleigh, NC 27607
TEL 919.866.4952 FAX 919.859.5663
Site Development | Residential | Infrastructure | Technology
www.timmons.com

TIMMONS GROUP
YOUR VISION ACHIEVED THROUGH OURS.

and 109 outgoing PM peak hour trips for of the proposed development. The ADT volume totaled 3,214 VPD.

A comparison of the two tables revealed a reduction in projected site trips between the existing zoning land uses and the proposed senior apartment units. A difference of 267 trips and 154 trips were calculated during the AM and PM peak hours.

Sincerely,



Jeffrey P. Hochanadel, PE, PTOE
North Carolina Transportation Department Manager

TIMMONS GROUP

5410 Trinity Road
Suite 102
Raleigh, NC 27607

**P** 919.866.4951
**F** 919.859.5663
**www.timmons.com**

February 8, 2021

To whom it concerns,

On February 6, 2021, I made a site visit to the Wake County parcel identified as #0742026247 in Apex, NC, to document existing trees 18" DBH and larger, as requested by Rick Baker, PE (Timmons Group). The parcel is located in the SW quadrant of the intersection of West Williams Street (NC 55) and Hunter Street, adjacent to the Walgreens parcel.

The parcel is bounded by NC 55 on its eastern property line, Walgreens on its northern property line, a US post office and the Amherst residential subdivision on its southern property line and the Glen Arbor residential subdivision on the western property line.

The parcel is mostly wooded, with the majority of vegetation consisting of scrub pine. Mature hardwoods and pines with an open understory were witnessed along the western and southern perimeter of the site. Based on the existing vegetation, it is assumed that the property was previously cleared. A constructed stormwater treatment pond is in the middle of the site and a small creek runs north to south through a portion of the property.

Fourteen (14) trees 18" DBH and larger were inventoried on the site. All were either along the perimeter of the property or along the existing creek. Some trees at the SW corner of the property were inaccessible due to a wood privacy fence that prohibited access without crossing private property. These were visually identified as being 18" DBH or larger. All other trees noted were measured. The attached map documents the trees' approximate locations and is based off a field survey that was completed by SEPI in 2015.

Please do not hesitate to reach out to me with any questions about this report.

Respectfully,

Jon Blasco

NORTH CAROLINA REGISTERED LANDSCAPE ARCHITECT 2069 JONATHAN BLASCO

Jon Blasco, PLA/ASLA
Timmons Group

## LEGEND OF SYMBOLS & ABBREVIATIONS

THESE STANDARD SYMBOLS WILL BE FOUND IN THE DRAWING.

- TBM–TEMPORARY BENCHMARK
- BH–BOREHOLE
- CP–COMPUTED POINT
- CO–CLEANOUT
- EPK–EXISTING PK NAIL
- EIP–EXISTING IRON PIPE
- EIR–EXISTING IRON REBAR
- PKS–PK NAIL SET
- P.HOLES–PUNCH HOLE SET
- FH–FIRE HYDRANT
- GM–GAS METER
- GY–GUY WIRE
- IPS–IRON PIPE SET
- LP–LAMP POLE
- MH–MANHOLE
- PP–POWER POLE
- TR.BX–TRAFFIC SIGNAL BOX
- SSMH–SANITARY SEWER MANHOLE
- TPED–TELEPHONE PEDESTAL
- TMH–TELEPHONE MANHOLE
- TREE
- WM–WATER METER
- WV–WATER VALVE
- SDMH–STORM MANHOLE
- CATCH BASIN
- DROP INLET
- SIGN
- SGNP–SIGN POST
- TR.POLE–TRAFFIC SIGNAL POLE
- NCGS–NORTH CAROLINA GEODETIC SURVEY
- R/W.MON–RIGHT–OF–WAY MONUMENT
- WELL

TRANS.–TRANSFORMER
GR–GRATE
I–INVERT IN
O–INVERT OUT
INV–INVERT
RCP–REINFORCED CONCRETE PIPE
CPP–CORRUGATED PLASTIC PIPE
PVC–POLYVINYL CHLORIDE PIPE
DIP–DUCTILE IRON PIPE
FOC.VTL–FIBER OPTIC VAULT

PINE ( ⌀ INDICATES TREE DIAMETER)
OAK
POPLAR

- BOUNDARY LINE
- BOUNDARY ADJACENT LINE
- BOUNDARY PROPERTY TIE
- SETBACK LINE
- LANDSCAPE BUFFER
- EASEMENT PER CONDITIONAL USE PLAN
- EXISTING UNDERGROUND GAS LINE
- EXISTING UNDERGROUND TELEPHONE LINE
- EXISTING UNDERGROUND CABLE
- EXISTING UNDERGROUND WATER
- EXISTING UNDERGROUND ELECTRIC
- EXISTING OVERHEAD POWER LINE
- EXISTING UNDERGROUND WATER
- EXISTING FIBER OPTIC LINE
- EXISTING STORM DRAINAGE LINE
- EXISTING SANITARY SEWER LINE
- EXISTING TREE LINE
- EXISTING MAJOR CONTOUR LINE
- EXISTING MINOR CONTOUR LINE
- EXISTING FENCE
- EXISTING BUILDING LINE
- RIGHT–OF–WAY LINE
- PERMANENT UTILITY EASEMENT
- TRAFFIC SIGNAL LINE

EXISTING SIDE WALK HATCH
EXISTING RIP RAP

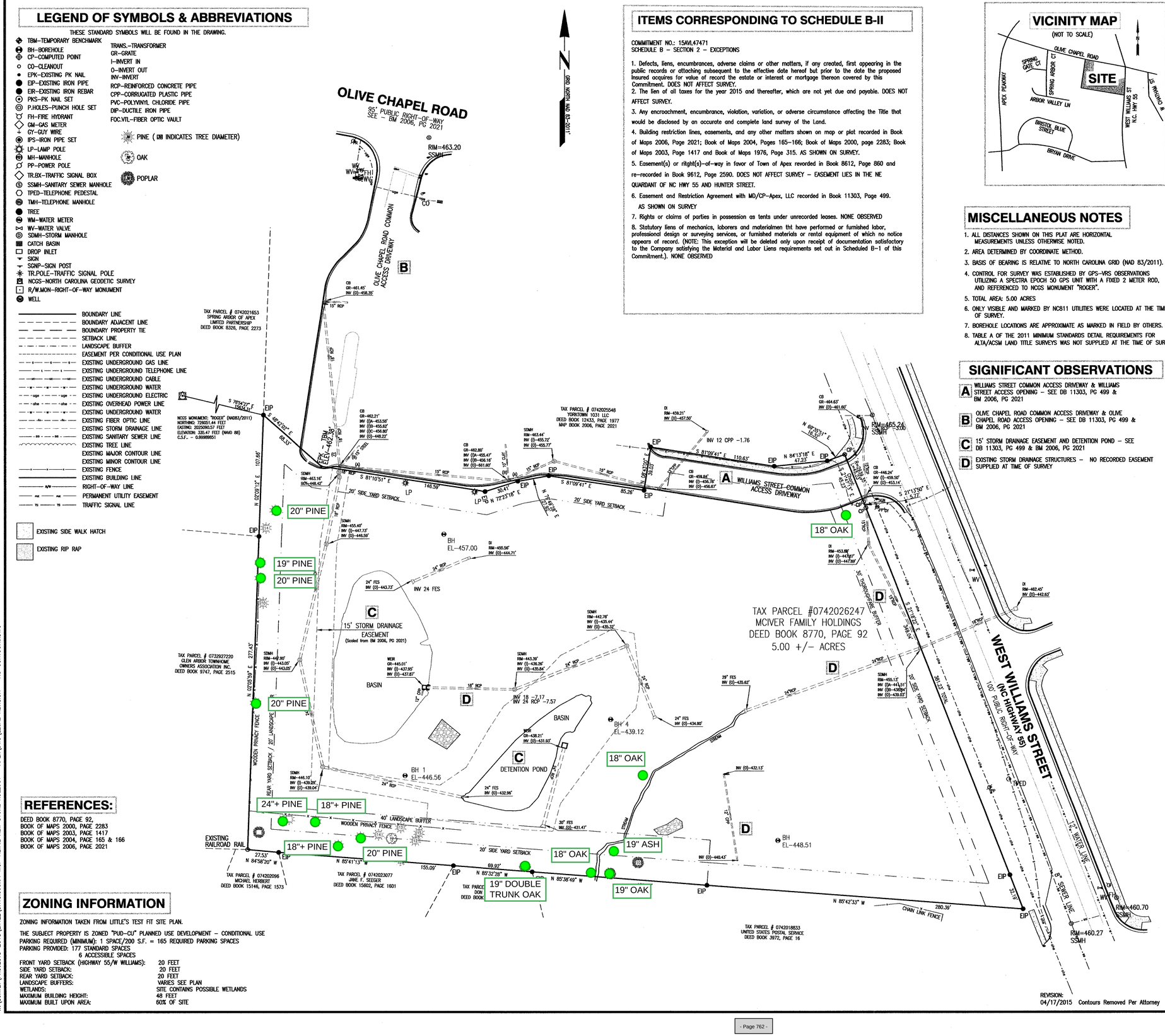


## ITEMS CORRESPONDING TO SCHEDULE B-II

COMMITMENT NO.: 15AWL47471
SCHEDULE B – SECTION 2 – EXCEPTIONS

1. Defects, liens, encumbrances, adverse claims or other matters, if any created, first appearing in the public records or attaching subsequent to the effective date hereof but prior to the date the proposed insured acquires for value of record the estate or interest or mortgage thereon covered by this Commitment. DOES NOT AFFECT SURVEY.
2. The lien of all taxes for the year 2015 and thereafter, which are not yet due and payable. DOES NOT AFFECT SURVEY.
3. Any encroachment, encumbrance, violation, variation, or adverse circumstance affecting the Title that would be disclosed by an accurate and complete land survey of the Land.
4. Building restriction lines, easements, and any other matters shown on map or plat recorded in Book of Maps 2006, Page 2021; Book of Maps 2004, Pages 165–166; Book of Maps 2000, page 2283; Book of Maps 2003, Page 1417 and Book of Maps 1976, Page 315. AS SHOWN ON SURVEY.
5. Easement(s) or rtght(s)–of–way in favor of Town of Apex revorded in Book 8612, Page 860 and re–recorded in Book 9612, Page 2590. DOES NOT AFFECT SURVEY – EASEMENT LIES IN THE NE QUARDANT OF NC HWY 55 AND HUNTER STREET.
6. Easement and Restriction Agreement with MD/CP–Apex, LLC recorded in Book 11303, Page 499. AS SHOWN ON SURVEY
7. Rights or claims of parties in possession as tents under unrecorded leases. NONE OBSERVED
8. Statutory liens of mechanics, laborers and materialmen tht have performed or furnished labor, professional design or surveying services, or furnished materials or rental equipment of which no notice appears of record. (NOTE: This exception will be deleted only upon receipt of documentation satisfactory to the Company satisfying the Material and Labor Liens requirements set out in Scheduled B–1 of this Commitment.). NONE OBSERVED

## VICINITY MAP

(NOT TO SCALE)




## MISCELLANEOUS NOTES

1. ALL DISTANCES SHOWN ON THIS PLAT ARE HORIZONTAL MEASUREMENTS UNLESS OTHERWISE NOTED.
2. AREA DETERMINED BY COORDINATE METHOD.
3. BASIS OF BEARING IS RELATIVE TO NORTH CAROLINA GRID (NAD 83/2011).
4. CONTROL FOR SURVEY WAS ESTABLISHED BY GPS–VRS OBSERVATIONS UTILIZING A SPECTRA EPOCH 50 GPS UNIT WITH A FIXED 2 METER ROD, AND REFERENCED TO NCGS MONUMENT "ROGER".
5. TOTAL AREA: 5.00 ACRES
6. ONLY VISIBLE AND MARKED BY NC811 UTILITIES WERE LOCATED AT THE TIME OF SURVEY.
7. BOREHOLE LOCATIONS ARE APPROXIMATE AS MARKED IN FIELD BY OTHERS.
8. TABLE A OF THE 2011 MINIMUM STANDARDS DETAIL REQUIREMENTS FOR ALTA/ACSM LAND TITLE SURVEYS WAS NOT SUPPLIED AT THE TIME OF SURVEY.

## SIGNIFICANT OBSERVATIONS

- **A** WILLIAMS STREET COMMON ACCESS DRIVEWAY & WILLIAMS STREET ACCESS OPENING – SEE DB 11303, PG 499 & BM 2006, PG 2021
- **B** OLIVE CHAPEL ROAD COMMON ACCESS DRIVEWAY & OLIVE CHAPEL ROAD ACCESS OPENING – SEE DB 11303, PG 499 & BM 2006, PG 2021
- **C** 15' STORM DRAINAGE EASEMENT AND DETENTION POND – SEE DB 11303, PG 499 & BM 2006, PG 2021
- **D** EXISTING STORM DRAINAGE STRUCTURES – NO RECORDED EASEMENT SUPPLIED AT TIME OF SURVEY

## RECORD DESCRIPTION

EXHIBIT "A"
Lying and being in Wake County, North Carolina, and more particularly described as follows:

All of (i) Lot 1 containing approximately 4.250 acres, (ii) Lot 1A containing approximately 0.149 acre, (iii) Lot 2 containing approximately 1.714 acres, (iv) Lot 2A containing approximately 0.322 acre, (v) Lot 2B containing approximately 0.004 acre, (vi) Lot 3 containing approximately 0.658 acre, (vii) Lot 3A containing approximately 0.432 acre, (viii) Lot 4 containing approximately 1.178 acres and (ix) Lot 4A containing approximately 0.432 acre all shown on that plat entitled "Recombination Survey for McIver Family" dated July 13, 2000, prepared by Smith and Smith Surveyors and recorded in Book of Maps 2000, Page 2283, Wake County Registry.

This being the same property conveyed to Seller pursuant to North Carolina Non–Warranty Deed recorded in Book 8770, Page 92 of wake County Register of Deeds.

LESS AND EXCEPT that certain 2.80 acres, 121,962 sq. ft. shwon on that certain Final Recombination Plat, prepared for McIver Family Holdings LLC, by Hunter Civil Techonogies, PLLC, dated September 8, 2003, and recorded in Book of Maps 2004, Page 165 and 166 of the Wake County Registry which was conveyed to MD/CP–Apex, LLC by Deed recorded in Book 11303, Page 495 of the Wake County Registry.

The foregoing tract also being known as that certain 5.01 acres, 218,026 sq. ft., on that certain Final Recombination Plat prepared for McIver Family Holdings LLC by Hunter Civil Technologies, PLLC dated September 8, 2003, and recorded in Book of Maps 2004, Page 165 and 166 of the Wake County Registry.

## SURVEY DESCRIPTION

Lying and being in White Oak Township, Wake County, North Carolina and being more particularly described as follows:

BEGINNING at an existing iron pipe being the common corner of the property owned by Yorktown 1031 LLC (now or formerly) as described in that instrument recorded in Book 12433, Page 1977 and shown on Book of Maps 2006, Page 2021 and in the eastern boundary line of property owned by Spring Arbor of Apex Limited Partnership (now or formerly) as described in that instrument recorded in Book 8326, Page 2273 in the Wake County Public Registry, said existing iron pipe being located South 76° 54' 27" East 15,634.31 feet from N.C.G.S. Monument "Roger" having NAD 83 (2011) North Carolina State Plane Grid Coordinates N=726,051.44 feet and E=2,025,090.57 feet, with a combined grid reduction factor of 0.99988851; thence with the southern boundary of aforesaid property the following nine (9) courses and distances: (1) South 48° 42' 02" East 68.33 feet to an existing PK Nail and (2) South 81° 10' 51" East 146.59 feet to an existing iron pipe and (3) North 72° 23' 18" East 30.41 feet to an existing iron pipe and (4) North 79° 49' 28" East 27.92 feet to an existing iron pipe and (5) South 81° 09' 41" East 85.26 feet to an existing iron pipe and (6) North 08° 43' 00" East 39.03 feet to an existing iron pipe and (7) South 81° 09' 41" East 110.63 feet to an existing iron pipe and (8) North 84° 13' 18" East 47.23 feet to an existing iron pipe and (9) North 68° 35' 51" East 16.32 feet to a computed point on the western margin of West Williams Street (also known as NC Highway 55) having a 100 foot public right–of–way; thence with the western margin of the right–of–way of aforesaid street the following three (3) courses and distances: (1) with a curve to the right having a radius of 2939.35 feet and an arc length of 45.23 feet, having a chord of South 21° 42' 13" East 45.23 feet to a computed point and (2) South 21° 13' 50" East 5.77 feet to an computed point and (3) South 21° 18' 22" East (passing an iron pipe at 349.04 feet) for a total distance of 381.23 feet to an existing iron pipe being the common corner of the property owned by the United States Postal Service as described in that instrument recorded in Book 3972, Page 16 in that aforesaid Registry; thence leaving aforesaid street and following the northern boundary of aforesaid property North 85° 42' 33" West 280.39 feet to an existing iron pipe, continuing with aforesaid property North 85° 38' 49" West 155.03 feet to an existing iron pipe marking the northeast corner of the property owned by Don E. Thomas (now or formerly) as described in that instrument recorded in Book 6803, Page 244 in that aforesaid Registry; thence with the northern boundary of aforesaid property North 85° 32' 28" West 69.92 feet to an existing iron pipe marking the northwest corner of aforesaid property and the northeast corner of property owned by Jane F. Seeger (now or formerly) as described in that instrument recorded in Book 15602, Page 1601 in that aforesaid Registry; thence with the northern boundary of aforesaid property North 85° 41' 13" West 155.09 feet to an existing iron pipe marking the northwest property corner of aforesaid property and marking the northeast corner of property owned by Michael Herbert (now or formerly) as described in that instrument recorded in Book 15146, Page 1573 in that aforesaid Registry; thence with the northern boundary of aforesaid property North 84° 58' 20" West 27.53 feet to an existing railroad rail marking the southeast corner of property owned by Glen Arbor Townhome Associations Inc. (now or formerly) as described in that instrument recorded in Book 9747, Page 2515 in that aforesaid Registry; thence with eastern boundary of aforesaid property North 02° 05' 59" East 277.43 feet to an existing iron pipe marking the northeast corner of the aforesaid property and marking the southeast corner of the property owned by Spring Arbor of Apex Limited Partnership (now or formerly) as described in that instrument recorded in Book 8326, Page 2273 in that aforesaid Registry; thence with the eastern boundary of aforesaid property North 02° 09' 12" East 107.66 feet to the POINT OR PLACE OF BEGINNING, containing 5.00 acres, more or less, as shown on survey titled "ALTA/ACSM Land Title Survey of Lands For: MGP Retail Consulting, LLC, West Williams Street (aka: NC Highway 55), dated March 18, 2015, and prepared by Michael D. Case of SEPI Engineering & Construction, N.C.P.L.S. No. L–2828.

## SURVEY CERTIFICATION

I, Michael D. Case, PLS indicate to one or more of the following as indicated thus: "x"

------ A. That this plat is of a survey that creates a subdivision of land within the area of a county or municipality that has an ordinance that regulates parcels of land;
------ B. That this plat is of a survey that is located in such portion of a county or municipality that is unregulated as to an ordinance that regulates parcels of land;
---X--- C. That this plat is of a survey of an existing parcel or parcels of land:
------ D. That this plat is of a survey of another category, such as the recombination of existing parcels; a court–ordered survey or other exceptions to the definition of subdivision.
------ E. That the information available to this surveyor is such that I am unable to make a determination to the best of my professional ability as to provisions contained in (a) through (d) above.

Surveyor

## REFERENCES:

DEED BOOK 8770, PAGE 92,
BOOK OF MAPS 2000, PAGE 2283
BOOK OF MAPS 2003, PAGE 1417
BOOK OF MAPS 2004, PAGE 165 & 166
BOOK OF MAPS 2006, PAGE 2021

## ZONING INFORMATION

ZONING INFORMATION TAKEN FROM LITTLE'S TEST FIT SITE PLAN.

THE SUBJECT PROPERTY IS ZONED "PUD–CU" PLANNED USE DEVELOPMENT – CONDITIONAL USE
PARKING REQUIRED (MINIMUM): 1 SPACE/200 S.F. = 165 REQUIRED PARKING SPACES
PARKING PROVIDED: 177 STANDARD SPACES
6 ACCESSIBLE SPACES

| | |
|---|---|
| FRONT YARD SETBACK (HIGHWAY 55/W WILLIAMS): | 20 FEET |
| SIDE YARD SETBACK: | 20 FEET |
| REAR YARD SETBACK: | 20 FEET |
| LANDSCAPE BUFFERS: | VARIES SEE PLAN |
| WETLANDS: | SITE CONTAINS POSSIBLE WETLANDS |
| MAXIMUM BUILDING HEIGHT: | 48 FEET |
| MAXIMUM BUILT UPON AREA: | 60% OF SITE |

## ALTA/ACSM LAND TITLE SURVEY

FOR:

**MGP RETAIL CONSULTING, LLC**

WEST WILLIAMS STREET (AKA: NC HIGHWAY 55)
TOWN OF APEX
WHITE OAK TOWNSHIP, WAKE COUNTY, NORTH CAROLINA

**SURVEYOR'S CERTIFICATION**

TO: MGP RETAIL CONSULTING; LLC AND FIDELITY NATIONAL TITLE INSURANCE COMPANY, TOGETHER WITH THEIR RESPECTIVE SUCCESSOR AND/OR ASSIGNS.

THIS IS TO CERTIFY THAT THIS MAP OR PLAT AND THE SURVEY ON WHICH IT IS BASED WERE MADE IN ACCORDANCE WITH THE 2011 MINIMUM STANDARD DETAIL REQUIREMENTS FOR ALTA/ACSM LAND TITLE SURVEYS, JOINTLY ESTABLISHED AND ADOPTED BY ALTA AND NSPS, AND DOES NOT INCLUDE ITEMS 1–22 OF TABLE A THEREOF. THE FIELD WORK WAS COMPLETED ON MARCH 18, 2015.

REGISTER SURVEYOR: MICHAEL D. CASE
PROFESSIONAL LAND SURVEYOR NO.: 2828
STATE OF NORTH CAROLINA
DATE OF SURVEY: MARCH 18, 2015
DATE LAST REVISION: APRIL 17, 2015
DATE PRINTED: APRIL 17, 2015

NORTH CAROLINA PROFESSIONAL LAND SURVEYOR SEAL L–2828 MICHAEL D. CASE

REVISION:
04/17/2015 Contours Removed Per Attorney


SEPI ENGINEERING & CONSTRUCTION
1025 WADE AVENUE
RALEIGH, NORTH CAROLINA
919.789.9977
11020 DAVID TAYLOR DRIVE, SUITE 115
CHARLOTTE, NORTH CAROLINA
704.714.4880
5030 NEW CENTRE DRIVE, SUITE B
WILMINGTON, NORTH CAROLINA
910.523.5715
WWW.SEPIENGINEERING.COM
INFO @ SEPIENGINEERING.COM
COMPANY LICENSE C–2197
TRANSPORTATION • TRAFFIC • SURVEYING
ENVIRONMENTAL • SITE CIVIL • INSPECTIONS


40' 0' 20' 40'
GRAPHIC SCALE 1"=40'

| DRAWN BY: | CHECKED BY: |
|---|---|
| ERIC CASE | MICHAEL D. CASE |
| PROJECT MANAGER | JOB: |
| MICHAEL D. CASE | SR15.003.01 |

W:\SURVEY\PROJECTS–2015\LITTLE\SR15.003.01 MGP RETAIL NEW STORE ROLLOUT – APEX\DWG\LEGAL REVISION – NO CONTOURS.DWG



WEST ELEVATION



EAST ELEVATION

TightLines Designs
creating great places to live
19 W. Hargett St, Suite 501 • Raleigh, NC 27601
919.834.3600 • www.tightlinesdesigns.com



# ABBEY SPRING

Apex, North Carolina



NORTH ELEVATION



SOUTH ELEVATION

TightLines Designs
creating great places to live
19 W. Hargett St, Suite 501 • Raleigh, NC 27601
919.834.3600 • www.tightlinesdesigns.com



# ABBEY SPRING

Apex, North Carolina

# PLANNING BOARD REPORT TO TOWN COUNCIL

Rezoning Case: 21CZ02 Abbey Spring PUD

**Planning Board Meeting Date:** March 8, 2021

## Report Requirements:

Per NCGS §160D-604(b), all proposed amendments to the zoning ordinance or zoning map shall be submitted to the Planning Board for review and comment. If no written report is received from the Planning Board within 30 days of referral of the amendment to the Planning Board, the Town Council may act on the amendment without the Planning Board report. The Town Council is not bound by the recommendations, if any, of the Planning Board.

Per NCGS §160D-604(d), the Planning Board shall advise and comment on whether the proposed action is consistent with all applicable officially adopted plans, and provide a written recommendation to the Town Council that addresses plan consistency and other matters as deemed appropriate by the Planning Board, but a comment by the Planning Board that a proposed amendment is inconsistent with the officially adopted plans shall not preclude consideration or approval of the proposed amendment by the Town Council.

**PROJECT DESCRIPTION:**

**Acreage:** ±5.01 acres

**PIN(s):** 0742026247

**Current Zoning:** Planned Unit Development (PUD-CU #02CU13)

**Proposed Zoning:** Planned Unit Development-Conditional Zoning (PUD-CZ)

**2045 Land Use Map:** High Density Multifamily/Commercial Services (A)

**Town Limits:** Inside

## Applicable Officially Adopted Plans:

The Board must state whether the project is consistent or inconsistent with the following officially adopted plans, if applicable. Applicable plans have a check mark next to them.

☑ 2045 Land Use Map
☑ Consistent ☐ Inconsistent Reason: _____

☑ Apex Transportation Plan
☑ Consistent ☐ Inconsistent Reason: _____

☑ Parks, Recreation, Open Space, and Greenways Plan
☑ Consistent ☐ Inconsistent Reason: _____

**Legislative Considerations:**

The applicant shall propose site-specific standards and conditions that take into account the following considerations, which are considerations that are relevant to the legislative determination of whether or not the proposed conditional zoning district rezoning request is in the public interest. These considerations do not exclude the legislative consideration of any other factor that is relevant to the public interest.

1. *Consistency with 2045 Land Use Plan*. The proposed Conditional Zoning (CZ) District use's appropriateness for its proposed location and consistency with the purposes, goals, objectives, and policies of the 2045 Land Use Plan.
   ☑ Consistent ☐ Inconsistent Reason: _____

2. *Compatibility.* The proposed Conditional Zoning (CZ) District use's appropriateness for its proposed location and compatibility with the character of surrounding land uses.
   ☑ Consistent ☐ Inconsistent Reason: _____

3. *Zoning district supplemental standards*. The proposed Conditional Zoning (CZ) District use's compliance with Sec. 4.4 *Supplemental Standards*, if applicable.
   ☑ Consistent ☐ Inconsistent Reason: _____

4. *Design minimizes adverse impact.* The design of the proposed Conditional Zoning (CZ) District use's minimization of adverse effects, including visual impact of the proposed use on adjacent lands; and avoidance of significant adverse impacts on surrounding lands regarding trash, traffic, service delivery, parking and loading, odors, noise, glare, and vibration and not create a nuisance.
   ☑ Consistent ☐ Inconsistent Reason: _____

5. *Design minimizes environmental impact.* The proposed Conditional Zoning District use's minimization of environmental impacts and protection from significant deterioration of water and air resources, wildlife habitat, scenic resources, and other natural resources.
   ☑ Consistent ☐ Inconsistent Reason: _____

6. *Impact on public facilities.* The proposed Conditional Zoning (CZ) District use's avoidance of having adverse impacts on public facilities and services, including roads, potable water and wastewater facilities, parks, schools, police, fire and EMS facilities.
☑ Consistent ☐ Inconsistent Reason: _____

7. *Health, safety, and welfare.* The proposed Conditional Zoning (CZ) District use's effect on the health, safety, or welfare of the residents of the Town or its ETJ.
☑ Consistent ☐ Inconsistent Reason: _____

8. *Detrimental to adjacent properties.* Whether the proposed Conditional Zoning (CZ) District use is substantially detrimental to adjacent properties.
☑ Consistent ☐ Inconsistent Reason: _____

9. *Not constitute nuisance or hazard.* Whether the proposed Conditional Zoning (CZ) District use constitutes a nuisance or hazard due to traffic impact or noise, or because of the number of persons who will be using the Conditional Zoning (CZ) District use.
☑ Consistent ☐ Inconsistent Reason: _____

10. *Other relevant standards of this Ordinance.* Whether the proposed Conditional Zoning (CZ) District use complies with all standards imposed on it by all other applicable provisions of this Ordinance for use, layout, and general development characteristics.
☑ Consistent ☐ Inconsistent Reason: _____

**Planning Board Recommendation:**

Motion: To recommend approval as presented.

Introduced by Planning Board member: Mark Steele

Seconded by Planning Board member: Keith Braswell

☐ *Approval*: the project is consistent with all applicable officially adopted plans and the applicable legislative considerations listed above.

☑ *Approval with conditions*: the project is not consistent with all applicable officially adopted plans and/or the applicable legislative considerations as noted above, so the following conditions are recommended to be included in the project in order to make it fully consistent:

Conditions proposed by applicant.

☐ *Denial*: the project is not consistent with all applicable officially adopted plans and/or the applicable legislative considerations as noted above.

With 5 Planning Board Member(s) voting "aye"

With 1 Planning Board Member(s) voting "no"

Reasons for dissenting votes:

Sherman - concerned about USPS doing a disservice because neighbors are not getting notice in time to participate; otherwise supportive of the project - just want the neighbors' concerns to be heard.

This report reflects the recommendation of the Planning Board, this the 8th day of March 2021.

Attest:

Michael Marks Digitally signed by Michael Marks Date: 2021.03.09 14:51:11 -05'00'

Michael Marks, Planning Board Chair

Dianne Khin Digitally signed by Dianne Khin Date: 2021.03.08 19:30:24 -05'00'

Dianne Khin, Director of Planning and Community Development

http://www.apexnc.org/DocumentCenter/View/34642/PB-only-Regular-Public-Notice-21CZ02?bidId=
Search...
townofapex.idtplans.c... | Unified Development ... | apexnc.org | Planning Department ... | Legal Notice of Public ... | apexnc.org | apexnc.org | Plan Review
File Edit Go to Favorites Help

**TOWN OF APEX**
POST OFFICE BOX 250
APEX, NORTH CAROLINA 27502
PHONE 919-249-3426

**PUBLIC NOTIFICATION**
**OF PUBLIC HEARINGS**
**CONDITIONAL ZONING #21CZ02**
**Abbey Spring PUD**

Pursuant to the provisions of North Carolina General Statutes §160A-364 and to the Town of Apex Unified Development Ordinance (UDO) Section 2.2.11, notice is hereby given of public hearings before the Planning Board of the Town of Apex. The purpose of these hearings is to consider the following:

**Applicant/Authorized Agent:** Isabel Worthy Mattox, Mattox Law Firm
**Property Address:** 0 W. Williams Street
**Acreage:** ±3.01 acres
**Property Identification Number (PIN):** 0742026247
**Current 2045 Land Use Map Designation:** Commercial Services/Office Employment
**Proposed 2045 Land Use Map Designation*:** High Density Multifamily/Commercial Services (A)
*This amendment is part of a larger series of Town-initiated amendments to the 2045 Land Use Map. The public hearing is scheduled for February 23, 2021. For more information visit http://www.apexnc.org/DocumentCenter/View/34483.
**Existing Zoning of Properties:** Planned Unit Development-Conditional Use (PUD-CU #02CU13)
**Proposed Zoning of Properties:** Planned Unit Development-Conditional Zoning (PUD-CZ)

**Public Hearing Location:** Apex Town Hall
Council Chambers, 2nd Floor
73 Hunter Street, Apex, North Carolina

**Planning Board Public Hearing Date and Time: March 8, 2021 4:30 PM**

If you would like to speak during the public hearing, you may sign-in ahead of time by emailing your name and address to bonnie.brock@apexnc.org. You may attend the meeting in person or view the meeting through the Town's YouTube livestream at: https://www.youtube.com/c/townofapexgov.

If you are unable to attend, you may provide comments no later than noon on Friday, March 5, 2021 by email (public.hearing@apexnc.org, 350-word limit) or voicemail (919-362-7300, 3-minute limit) according to the Remote Participation Policy at: http://www.apexnc.org/DocumentCenter/View/31397/. You must provide your name and address for the record. These comments will be read during the Planning Board meeting.

**A separate notice of the Town Council public hearing on this project will be mailed and posted in order to comply with State public notice requirements.**

**Vicinity Map:**




Property owners within 300 feet of the proposed conditional zoning have been sent this notice via first class mail. All interested parties may submit comments with respect to the application by the means specified above. In addition to the above map, the location of the property may be viewed online at https://maps.raleighnc.gov/imaps. The 2045 Land Use Map may be viewed online at www.apexnc.org/DocumentCenter/View/478. You may call 919-249-3426, Department of Planning and Community Development, with questions or for further information. To view the petition and related documents on-line: https://www.apexnc.org/DocumentCenter/View/34302.

Dianne F. Khin, AICP
Director of Planning and Community Development

Published Dates: February 23-March 8, 2021

1 / 1



1:51 PM
2/23/2021

http://www.apexnc.org/DocumentCenter/View/34683/TC-Abbey-Spring?bidId=
Search...
Planning Department Map Vie... | Legal Notice of Public Hearing... | apexnc.org | apexnc.org | Plan Review
File Edit Go to Favorites Help

**TOWN OF APEX**
POST OFFICE BOX 250
APEX, NORTH CAROLINA 27502
PHONE 919-249-3426

**PUBLIC NOTIFICATION**
**OF PUBLIC HEARINGS**
**CONDITIONAL ZONING #21CZ02**
**Abbey Spring PUD**

Pursuant to the provisions of North Carolina General Statutes §160A-364 and to the Town of Apex Unified Development Ordinance (UDO) Section 2.2.11, notice is hereby given of public hearings before the Town Council of the Town of Apex. The purpose of these hearings is to consider the following:

**Applicant/Authorized Agent:** Isabel Worthy Mattox, Mattox Law Firm
**Property Address:** 0 W. Williams Street
**Acreage:** ±5.01 acres
**Property Identification Number (PIN):** 0742026247
**2045 Land Use Map Designation:** High Density Multifamily/Commercial Services (A)
**Existing Zoning of Property:** Planned Unit Development-Conditional Use (PUD-CU #02CU13)
**Proposed Zoning of Property:** Planned Unit Development-Conditional Zoning (PUD-CZ)

**Public Hearing Location:** Apex Town Hall
Council Chambers, 2nd Floor
73 Hunter Street, Apex, North Carolina

***Comments received prior to or during the Planning Board public hearing will not be read during the Town Council public hearing. Separate comments must be provided for the two public hearings in the time frames specified below.***

**Town Council Public Hearing Date and Time: March 23, 2021 6:00 PM**

You may attend the meeting in person or view the meeting through the Town's YouTube livestream at: https://www.youtube.com/c/townofapexgov.

If you are unable to attend, you may provide comments no sooner than Monday, March 8, 2021 but no later than noon on Monday, March 22, 2021 by email (public.hearing@apexnc.org, 350-word limit) or voicemail (919-362-7300, 3-minute limit) according to the Remote Participation Policy at: http://www.apexnc.org/DocumentCenter/View/31397/. You must provide your name and address for the record. These comments will be read during the Town Council meeting.

If the Council meeting is held with at least one member attending virtually, the vote on the subject of this public hearing will be delayed per State law to allow for comments to be submitted between publication of any required notice and 24 hours after the public hearing. Comments must be provided according to the means specified above. This item will be then be scheduled for the next Town Council meeting. Please note that at this subsequent meeting, Town Council may choose to vote on the item, table the discussion to a later date, or take other action which would delay Council action to another time.

**Vicinity Map:**


Rezoning #21CZ02
Hunter Valley
Fairview Road
Walgreens
Olive Arbor
Cedarwood
Cedarwood Ct
Cedarwood Dr
Cedarwood Ln
Cedarwood Pl
Cedarwood Trl
Cedarwood Way
Cedarwood Cir

http://www.apexnc.org/DocumentCenter/View/34683/TC-Abbey-Spring?bidId=
Search...
Legal Notice of Public Hearing...
apexnc.org
File Edit Go to Favorites Help
1 / 1

**TOWN OF APEX**
POST OFFICE BOX 250
APEX, NORTH CAROLINA 27502
PHONE 919-249-3426

**REVISED PUBLIC NOTIFICATION OF PUBLIC HEARINGS**
CONDITIONAL ZONING #21CZ02
Abbey Spring PUD

Pursuant to the provisions of North Carolina General Statutes §160A-364 and to the Town of Apex Unified Development Ordinance (UDO) Section 2.2.11, notice is hereby given of public hearings before the Town Council of the Town of Apex. The purpose of these hearings is to consider the following:

**Applicant/Authorized Agent:** Isabel Worthy Mattox, Mattox Law Firm
**Property Address:** 0 W. Williams Street
**Acreage:** ±5.01 acres
**Property Identification Number (PIN):** 0742026247
**2045 Land Use Map Designation:** High Density Multifamily/Commercial Services (A)
**Existing Zoning of Property:** Planned Unit Development-Conditional Use (PUD-CU #02CU13)
**Proposed Zoning of Property:** Planned Unit Development-Conditional Zoning (PUD-CZ)

**Public Hearing Location:** ~~Apex Town Hall~~
~~Council Chambers, 2nd Floor~~
~~73 Hunter Street, Apex, North Carolina~~

***Comments received prior to or during the Planning Board public hearing will not be read during the Town Council public hearing. Separate comments must be provided for the two public hearings in the time frames specified below.***

Town Council Remote Public Hearing Date and Time: March 23, 2021 6:00 PM

You may ~~attend the meeting in person~~ or view the meeting through the Town's YouTube livestream at: https://www.youtube.com/c/townofapexgov.

~~If you are unable to attend,~~ yYou may provide comments no sooner than Monday, March 8, 2021 but no later than noon on Monday, March 22, 2021 by email (public.hearing@apexnc.org, 350-word limit) or voicemail (919-362-7300, 3-minute limit) according to the Remote Participation Policy at: http://www.apexnc.org/DocumentCenter/View/31397/. You must provide your name and address for the record. These comments will be read during the Town Council meeting.

~~If the Council meeting is held with at least one member attending virtually,~~ tThe vote on the subject of this public hearing will be delayed per State law to allow for comments to be submitted between publication of any required notice and 24 hours after the public hearing. Comments must be provided according to the means specified above. This item will then be scheduled for the next Town Council meeting on Thursday, March 25, 2021 at 9:00 am. Please note that at this subsequent meeting, Town Council may choose to vote on the item, table the discussion to a later date, or take other action which would delay Council action to another time.

**Vicinity Map:**




Property owners within 300 feet of the proposed conditional zoning have been sent this notice via first class mail. All interested parties may submit comments with respect to the application by the means specified above. In addition to the above map, the location of the property may be viewed online at https://maps.raleighnc.gov/imaps. The 2045 Land Use Map may be viewed online at www.apexnc.org/DocumentCenter/View/478. You may call 919-249-3426, Department of Planning and Community Development, with questions or for further information. To view the petition and related documents on-line: https://www.apexnc.org/DocumentCenter/View/34302.

Dianne F. Khin, AICP
Director of Planning and Community Development

Published Dates: ~~February 26~~ March 16-March 23, 2021



10:51 AM
3/16/2021

**TOWN OF APEX**
POST OFFICE BOX 250
APEX, NORTH CAROLINA 27502
PHONE 919-249-3426

# PUBLIC NOTIFICATION OF PUBLIC HEARINGS

CONDITIONAL ZONING #21CZ02
Abbey Spring PUD

Pursuant to the provisions of North Carolina General Statutes §160A-364 and to the Town of Apex Unified Development Ordinance (UDO) Section 2.2.11, notice is hereby given of public hearings before the Planning Board of the Town of Apex. The purpose of these hearings is to consider the following:

**Applicant/Authorized Agent:** Isabel Worthy Mattox, Mattox Law Firm
**Property Address:** 0 W. Williams Street
**Acreage:** ±5.01 acres
**Property Identification Number (PIN):** 0742026247
**Current 2045 Land Use Map Designation:** Commercial Services/Office Employment
**Proposed 2045 Land Use Map Designation*:** High Density Multifamily/Commercial Services (A)
*This amendment is part of a larger series of Town-initiated amendments to the 2045 Land Use Map. The public hearing is scheduled for February 23, 2021. For more information visit http://www.apexnc.org/DocumentCenter/View/34483.
**Existing Zoning of Properties:** Planned Unit Development-Conditional Use (PUD-CU #02CU13)
**Proposed Zoning of Properties:** Planned Unit Development-Conditional Zoning (PUD-CZ)

**Public Hearing Location:** Apex Town Hall
Council Chambers, 2nd Floor
73 Hunter Street, Apex, North Carolina

**Planning Board Public Hearing Date and Time: March 8, 2021 4:30 PM**

If you would like to speak during the public hearing, you may sign-in ahead of time by emailing your name and address to bonnie.brock@apexnc.org. You may attend the meeting in person or view the meeting through the Town's YouTube livestream at: https://www.youtube.com/c/townofapexgov.

If you are unable to attend, you may provide comments no later than noon on Friday, March 5, 2021 by email (public.hearing@apexnc.org, 350-word limit) or voicemail (919-362-7300, 3-minute limit) according to the Remote Participation Policy at: http://www.apexnc.org/DocumentCenter/View/31397/. You must provide your name and address for the record. These comments will be read during the Planning Board meeting.

**A separate notice of the Town Council public hearing on this project will be mailed and posted in order to comply with State public notice requirements.**

**Vicinity Map:**




Property owners within 300 feet of the proposed conditional zoning have been sent this notice via first class mail. All interested parties may submit comments with respect to the application by the means specified above. In addition to the above map, the location of the property may be viewed online at https://maps.raleighnc.gov/imaps. The 2045 Land Use Map may be viewed online at www.apexnc.org/DocumentCenter/View/478. You may call 919-249-3426, Department of Planning and Community Development, with questions or for further information. To view the petition and related documents on-line: https://www.apexnc.org/DocumentCenter/View/34302.

Dianne F. Khin, AICP
Director of Planning and Community Development

Published Dates: February 23-March 8, 2021

**TOWN OF APEX**
POST OFFICE BOX 250
APEX, NORTH CAROLINA 27502
PHONE 919-249-3426

# PUBLIC NOTIFICATION OF PUBLIC HEARINGS

CONDITIONAL ZONING #21CZ02
Abbey Spring PUD

Pursuant to the provisions of North Carolina General Statutes §160A-364 and to the Town of Apex Unified Development Ordinance (UDO) Section 2.2.11, notice is hereby given of public hearings before the Town Council of the Town of Apex. The purpose of these hearings is to consider the following:

**Applicant/Authorized Agent:** Isabel Worthy Mattox, Mattox Law Firm
**Property Address:** 0 W. Williams Street
**Acreage:** ±5.01 acres
**Property Identification Number (PIN):** 0742026247
**2045 Land Use Map Designation:** High Density Multifamily/Commercial Services (A)
**Existing Zoning of Property:** Planned Unit Development-Conditional Use (PUD-CU #02CU13)
**Proposed Zoning of Property:** Planned Unit Development-Conditional Zoning (PUD-CZ)

**Public Hearing Location:** Apex Town Hall
Council Chambers, 2nd Floor
73 Hunter Street, Apex, North Carolina

***Comments received prior to or during the Planning Board public hearing will not be read during the Town Council public hearing. Separate comments must be provided for the two public hearings in the time frames specified below.***

**Town Council Public Hearing Date and Time: March 23, 2021 6:00 PM**

You may attend the meeting in person or view the meeting through the Town's YouTube livestream at: https://www.youtube.com/c/townofapexgov.

If you are unable to attend, you may provide comments no sooner than Monday, March 8, 2021 but no later than noon on Monday, March 22, 2021 by email (public.hearing@apexnc.org, 350-word limit) or voicemail (919-362-7300, 3-minute limit) according to the Remote Participation Policy at: http://www.apexnc.org/DocumentCenter/View/31397/. You must provide your name and address for the record. These comments will be read during the Town Council meeting.

If the Council meeting is held with at least one member attending virtually, the vote on the subject of this public hearing will be delayed per State law to allow for comments to be submitted between publication of any required notice and 24 hours after the public hearing. Comments must be provided according to the means specified above. This item will be then be scheduled for the next Town Council meeting. Please note that at this subsequent meeting, Town Council may choose to vote on the item, table the discussion to a later date, or take other action which would delay Council action to another time.

**Vicinity Map:**




Property owners within 300 feet of the proposed conditional zoning have been sent this notice via first class mail. All interested parties may submit comments with respect to the application by the means specified above. In addition to the above map, the location of the property may be viewed online at https://maps.raleighnc.gov/imaps. The 2045 Land Use Map may be viewed online at www.apexnc.org/DocumentCenter/View/478. You may call 919-249-3426, Department of Planning and Community Development, with questions or for further information. To view the petition and related documents on-line: https://www.apexnc.org/DocumentCenter/View/34302.

Dianne F. Khin, AICP
Director of Planning and Community Development

Published Dates: February 26-March 23, 2021

**TOWN OF APEX**
POST OFFICE BOX 250
APEX, NORTH CAROLINA 27502
PHONE 919-249-3426

# REVISED PUBLIC NOTIFICATION OF PUBLIC HEARINGS

CONDITIONAL ZONING #21CZ02
Abbey Spring PUD

Pursuant to the provisions of North Carolina General Statutes §160A-364 and to the Town of Apex Unified Development Ordinance (UDO) Section 2.2.11, notice is hereby given of public hearings before the Town Council of the Town of Apex. The purpose of these hearings is to consider the following:

**Applicant/Authorized Agent:** Isabel Worthy Mattox, Mattox Law Firm
**Property Address:** 0 W. Williams Street
**Acreage:** ±5.01 acres
**Property Identification Number (PIN):** 0742026247
**2045 Land Use Map Designation:** High Density Multifamily/Commercial Services (A)
**Existing Zoning of Property:** Planned Unit Development-Conditional Use (PUD-CU #02CU13)
**Proposed Zoning of Property:** Planned Unit Development-Conditional Zoning (PUD-CZ)

**Public Hearing Location:** ~~Apex Town Hall~~
~~Council Chambers, 2nd Floor~~
~~73 Hunter Street, Apex, North Carolina~~

***Comments received prior to or during the Planning Board public hearing will not be read during the Town Council public hearing. Separate comments must be provided for the two public hearings in the time frames specified below.***

**Town Council Remote Public Hearing Date and Time: March 23, 2021 6:00 PM**

You may ~~attend the meeting in person~~ or view the meeting through the Town's YouTube livestream at: https://www.youtube.com/c/townofapexgov.

~~If you are unable to attend, y~~You may provide comments no sooner than Monday, March 8, 2021 but no later than noon on Monday, March 22, 2021 by email (public.hearing@apexnc.org, 350-word limit) or voicemail (919-362-7300, 3-minute limit) according to the Remote Participation Policy at: http://www.apexnc.org/DocumentCenter/View/31397/. You must provide your name and address for the record. These comments will be read during the Town Council meeting.

~~If the Council meeting is held with at least one member attending virtually~~, ~~t~~The vote on the subject of this public hearing will be delayed per State law to allow for comments to be submitted between publication of any required notice and 24 hours after the public hearing. Comments must be provided according to the means specified above. This item will then be scheduled for the next Town Council meeting on Thursday, March 25, 2021 at 9:00 am. Please note that at this subsequent meeting, Town Council may choose to vote on the item, table the discussion to a later date, or take other action which would delay Council action to another time.

**Vicinity Map:**




Property owners within 300 feet of the proposed conditional zoning have been sent this notice via first class mail. All interested parties may submit comments with respect to the application by the means specified above. In addition to the above map, the location of the property may be viewed online at https://maps.raleighnc.gov/imaps. The 2045 Land Use Map may be viewed online at www.apexnc.org/DocumentCenter/View/478. You may call 919-249-3426, Department of Planning and Community Development, with questions or for further information. To view the petition and related documents on-line: https://www.apexnc.org/DocumentCenter/View/34302.

Dianne F. Khin, AICP
Director of Planning and Community Development

Published Dates: ~~February 26~~ March 16-March 23, 2021




Public Hearing Sign Posted By

Signature

1/8/2021

Date

**TOWN OF APEX**
POST OFFICE BOX 250
APEX, NORTH CAROLINA 27502
PHONE 919-249-3426

## AFFIDAVIT CERTIFYING
## Public Notification – Written (Mailed) Notice

Section 2.2.11
Town of Apex Unified Development Ordinance

| | |
|---|---|
| Project Name: | Conditional Zoning #21CZ02<br>Abbey Spring PUD |
| Project Location: | 0 W. Williams Street |
| Applicant or Authorized Agent: | Isabel Worthy Mattox, Mattox Law Firm |
| Firm: | Mattox Law Firm |

This is to certify that I, as Director of Planning and Community Development, mailed or caused to have mailed by first class postage for the above mentioned project on February 23, 2021, a notice containing the time and place, location, nature and scope of the application, where additional information may be obtained, and the opportunity for interested parties to be heard, to the property owners within 300' of the land subject to notification. I further certify that I relied on information provided to me by the above-mentioned person as to accuracy and mailing addresses of property owners within 300' of the land subject to notification.

2-23-2021
Date

Liz Loftin for Dianne Khin
Director of Planning & Community Development

---

STATE OF NORTH CAROLINA
COUNTY OF WAKE

Sworn and subscribed before me, Jeri Chastain Pederson, a Notary Public for the above State and County, this the 23 day of February, 2021.

JERI CHASTAIN PEDERSON
Notary Public
Wake County, North Carolina
My Commission Expires
SEAL March 10, 2024

Jeri Chastain Pederson
Notary Public

My Commission Expires: 3/10/2024

**TOWN OF APEX**
POST OFFICE BOX 250
APEX, NORTH CAROLINA 27502
PHONE 919-249-3426

## AFFIDAVIT CERTIFYING
## Public Notification – Written (Mailed) Notice

Section 2.2.11
Town of Apex Unified Development Ordinance

| | |
|---|---|
| Project Name: | Conditional Zoning #21CZ02<br>Abbey Spring PUD |
| Project Location: | 0 W. Williams Street |
| Applicant or Authorized Agent: | Isabel Worthy Mattox, Mattox Law Firm |
| Firm: | Mattox Law Firm |

This is to certify that I, as Director of Planning and Community Development, mailed or caused to have mailed by first class postage for the above mentioned project on February 26, 2021, a notice containing the time and place, location, nature and scope of the application, where additional information may be obtained, and the opportunity for interested parties to be heard, to the property owners within 300' of the land subject to notification. I further certify that I relied on information provided to me by the above-mentioned person as to accuracy and mailing addresses of property owners within 300' of the land subject to notification.

2-26-2021
Date

Liz Loftin for Dianne Khin
Director of Planning & Community Development

STATE OF NORTH CAROLINA
COUNTY OF WAKE

Sworn and subscribed before me, Jeri Chastain Pederson, a Notary Public for the above State and County, this the 26 day of February, 2021.

JERI CHASTAIN PEDERSON
Notary Public
Wake County, North Carolina
My Commission Expires
March 10, 2024
SEAL

Jeri Chastain Pederson
Notary Public

My Commission Expires: 3/10/2024

February 26, 2021

Jay Keller
Principal
Keller Environmental
(919) 749-8259 cell
(984) 242-4416 fax

Subject: Stream Buffer Determination
W. Williams Street- Abbey Spring
Cape Fear River Basin

Apex 20-007

Dear Mr. Keller,

On February 25th, 2021, Mr. James Misciagno went to the subject site to evaluate 2 (2) drainage features and determine if they are subject to the Town of Apex (Town) riparian buffer rules. Based on the information obtained during the site visit and per the requirements set forth in Section 6.1.11 of the Town Unified Development Ordinance (UDO), I concur with the stream classifications as shown on the attached sketch initialed by James Misciagno on February 26, 2021

| Drainage Feature | Shown as on USGS | Shown as on Soil Survey | Determination made in the field | Determined Buffer Width |
|---|---|---|---|---|
| Feature S1A | Not Present | Intermittent | Intermittent | 50 feet |
| Feature S1 | Not Present | Not Present | Ephemeral | 0 feet |

This on-site determination shall expire five (5) years from the date of this letter. Landowners or affected parties that dispute a determination made by the Division of Water Resources (DWR) or Delegated Local Authority in the Jordan Lake watershed may request a determination by the DWR Director.

An appeal request must be made within sixty (60) days of date of this letter or from the date the affected party (including downstream and/or adjacent owners) is notified of this letter. A request for a determination by the Director shall be referred to the Director in writing c/o Karen Higgins, DWR – 401 & Buffer Permitting Unit; 1617 Mail Service Center, Raleigh, NC 27699-1617. Otherwise the appeal procedure will be in accordance with UDO Section 6.1.11.

If you dispute the Director's determination, you may file a petition for an administrative hearing. You must file the petition with the Office of Administrative Hearings within sixty (60) days of receipt of this notice of decision. A petition is considered filed when it is received in the Office of Administrative Hearings

during normal office hours. The Office of Administrative Hearings accepts filings Monday through Friday between the hours of 8:00am and 5:00pm, except for official State holidays.

To request a hearing, send the original and one (1) copy of the petition to the Office of Administrative Hearings, 6714 Mail Service Center, Raleigh, NC 27699-6714. A copy of the petition must also be served to the Department of Natural Resources, c/o Mary Penny Thompson, General Counsel, 1601 Mail Service Center, Raleigh, NC 27699-1601.

This determination is final and binding unless, as detailed above, you ask for a hearing or appeal within sixty (60) days. This project may require a Section 404/401 Permit for the proposed activity. Any inquiries should be directed to the US Army Corp of Engineers (Raleigh Regulator Field Office) at (919) 554-4884. If you have any questions, please do not hesitate to contact me at (919) 249-3413.

Sincerely,

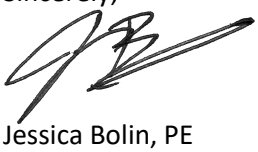

Jessica Bolin, PE
Environmental Engineering Manager

# Riparian Buffer Call
## Application

*This application is required to be fully completed and submitted to Town staff prior to conducting a buffer call. Please submit the application package electronically to jessica.bolin@apexnc.org .*

### PROPERTY INFORMATION

Owner(s): Lidl US Operations LLC

Site Address: 0 West Williams St, Apex NC 27502

### CONSULTANT INFORMATION (If applicable)

Name: Jay Keller

Address: 7921 Haymarket Ln

Email: jay@kellerenvironmental.com

Phone: (919) 749-8259

### CHECKLIST

*Please place a checkmark in the spaces provided below to indicate that the required information has been provided with this submittal.*

| | |
|---|---|
| Right of Entry Form | ✓ |
| NCDEQ Stream Identification Forms (v. 4.11) | ✓ |
| Sketch Map* | ✓ |

| | |
|---|---|
| Topo Map (most recent version) | ✓ |
| 1970 Wake County Soil Survey Map | ✓ |

*Sketch map should show all drainage features on the property with all applicable riparian buffers shown. Please clearly indicate or list which features are being called with this application.

### NOTES

### SIGNATURE (Consultant or Responsible Party)

*By my signature below, I certify that the information provided with this application is accurate and truthful.*

Date: 2/25/21

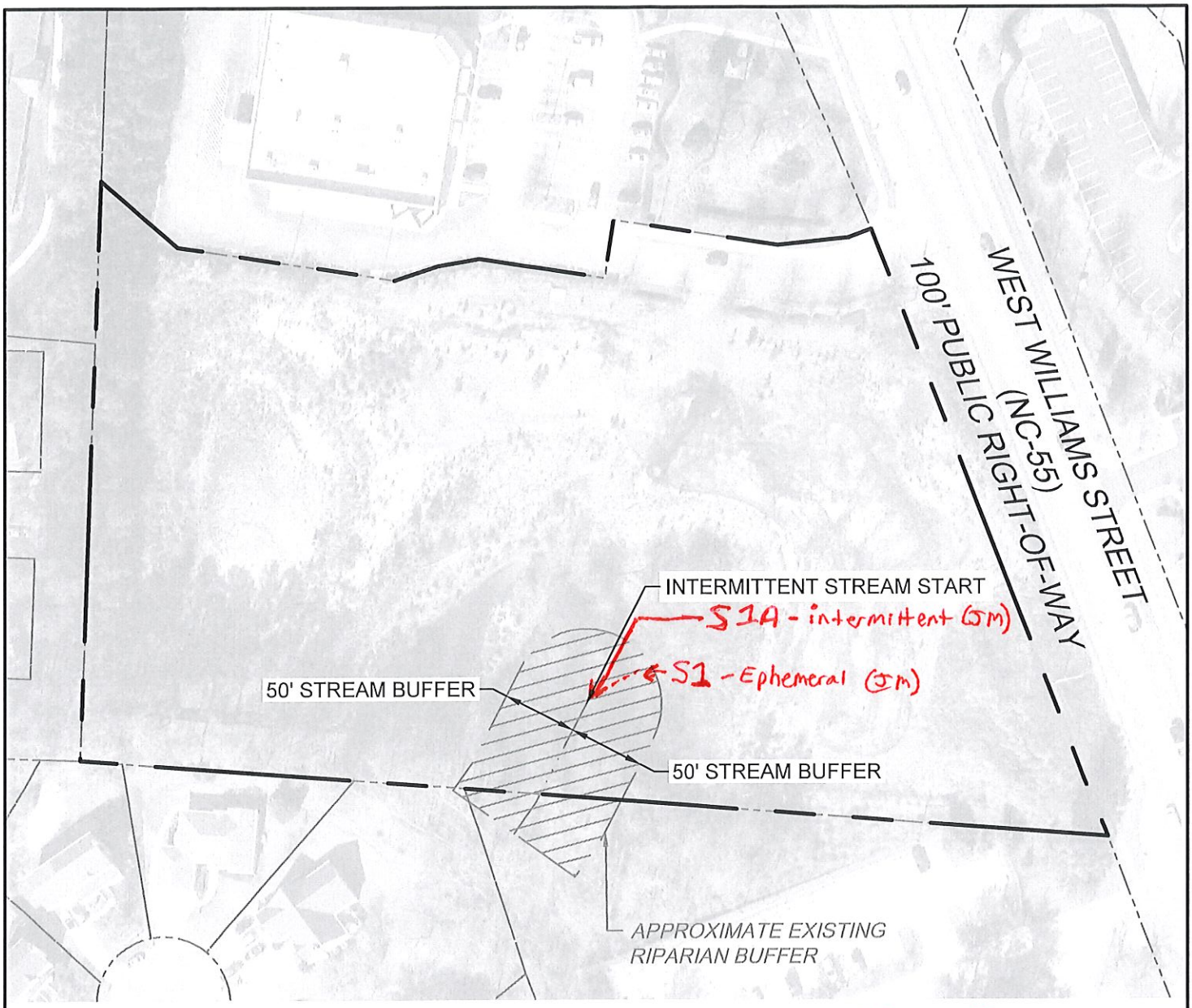


JM confirmed origin flag locations 2/25/2021

LEGEND

- SITE PROPERTY LINE
- ADJACENT PROPERTY LINE
- EXISTING INTERMITTENT STREAM
- RIPARIAN BUFFER

NAD 83

JM 2/26/2021

SCALE 1"=100'

0 100' 200'

**TIMMONS GROUP**

YOUR VISION ACHIEVED THROUGH OURS.

THIS DRAWING PREPARED AT THE
RALEIGH OFFICE
5410 Trinity Road, Suite 102 | Raleigh, NC 27607
TEL 919.866.4951 FAX 919.833.8124 www.timmons.com

EVERGREEN - ABBEY SPRING
TOWN OF APEX, WAKE COUNTY, NORTH CAROLINA
INTERMITTENT STREAM EXHIBIT

| SHEET NO. | JOB NO. | SCALE | DESIGNED BY | DRAWN BY | CHECKED BY | DATE |
|---|---|---|---|---|---|---|
| EX1.0 | 42601.008 | AS SHOWN | R. BAKER | T. DAEKE | R. BAKER | 02/26/2021 |

| DATE | REVISION DESCRIPTION |
|---|---|
| | |

These plans and associated documents are the exclusive property of TIMMONS GROUP and may not be reproduced, shall not be used for any purpose whatsoever, inclusive, but not limited to construction, bidding, and/or construction staking without the written consent of TIMMONS GROUP.

## NC DWQ Stream Identification Form Version 4.11

| | | |
|---|---|---|
| Date: 2/23/21 | Project/Site: Abbey Spring | Latitude: 35.7432 |
| Evaluator: JK | County: Wake | Longitude: -78.8630 |
| **Total Points:** *Stream is at least intermittent if ≥ 19 or perennial if ≥ 30** 27 | Stream Determination (circle one) Ephemeral (Intermittent) Perennial | Other *e.g. Quad Name:* Apex |

| A. Geomorphology (Subtotal = 17.5) | Absent | Weak | Moderate | Strong |
|---|---|---|---|---|
| 1[a]. Continuity of channel bed and bank | 0 | 1 | 2 | (3) |
| 2. Sinuosity of channel along thalweg | 0 | (1) | 2 | 3 |
| 3. In-channel structure: ex. riffle-pool, step-pool, ripple-pool sequence | 0 | 1 | (2) | 3 |
| 4. Particle size of stream substrate | 0 | 1 | (2) | 3 |
| 5. Active/relict floodplain | 0 | 1 | (2) | 3 |
| 6. Depositional bars or benches | 0 | (1) | 2 | 3 |
| 7. Recent alluvial deposits | 0 | (1) | 2 | 3 |
| 8. Headcuts | 0 | 1 | 2 | (3) |
| 9. Grade control | 0 | 0.5 | (1) | 1.5 |
| 10. Natural valley | 0 | 0.5 | 1 | (1.5) |
| 11. Second or greater order channel | No = (0) | | Yes = 3 | |

[a] artificial ditches are not rated; see discussions in manual

| B. Hydrology (Subtotal = 4) | | | | |
|---|---|---|---|---|
| 12. Presence of Baseflow | 0 | 1 | (2) | 3 |
| 13. Iron oxidizing bacteria | (0) | 1 | 2 | 3 |
| 14. Leaf litter | 1.5 | (1) | 0.5 | 0 |
| 15. Sediment on plants or debris | 0 | (0.5) | 1 | 1.5 |
| 16. Organic debris lines or piles | 0 | (0.5) | 1 | 1.5 |
| 17. Soil-based evidence of high water table? | No = (0) | | Yes = 3 | |

| C. Biology (Subtotal = 5.5) | | | | |
|---|---|---|---|---|
| 18. Fibrous roots in streambed | 3 | (2) | 1 | 0 |
| 19. Rooted upland plants in streambed | (3) | 2 | 1 | 0 |
| 20. Macrobenthos (note diversity and abundance) | (0) | 1 | 2 | 3 |
| 21. Aquatic Mollusks | (0) | 1 | 2 | 3 |
| 22. Fish | (0) | 0.5 | 1 | 1.5 |
| 23. Crayfish | 0 | (0.5) | 1 | 1.5 |
| 24. Amphibians | (0) | 0.5 | 1 | 1.5 |
| 25. Algae | (0) | 0.5 | 1 | 1.5 |
| 26. Wetland plants in streambed | FACW = 0.75; OBL = 1.5 Other = 0 | | | |

*perennial streams may also be identified using other methods. See p. 35 of manual.

Notes:

Sketch:

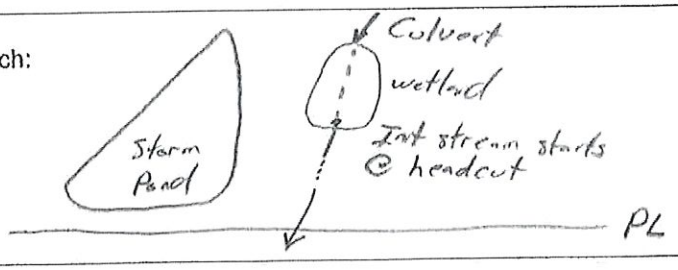




JM 2/26/2021

S1

NC Division of Water Quality –Methodology for Identification of Intermittent and Perennial Streams and Their Origins v. 4.11

## NC DWQ Stream Identification Form Version 4.11

| | | |
|---|---|---|
| Date: 2/23/21 | Project/Site: Abbey Spring | Latitude: 35.7344 |
| Evaluator: JK | County: Wake | Longitude: -78.8629 |
| **Total Points:** *Stream is at least intermittent if ≥ 19 or perennial if ≥ 30** 16.75 | Stream Determination (circle one) (Ephemeral) Intermittent Perennial | Other *e.g. Quad Name:* Apex |

| A. Geomorphology (Subtotal = 6.5) | Absent | Weak | Moderate | Strong |
|---|---|---|---|---|
| 1[a]. Continuity of channel bed and bank | 0 | (1) | 2 | 3 |
| 2. Sinuosity of channel along thalweg | (0) | 1 | 2 | 3 |
| 3. In-channel structure: ex. riffle-pool, step-pool, ripple-pool sequence | 0 | (1) | 2 | 3 |
| 4. Particle size of stream substrate | 0 | (1) | 2 | 3 |
| 5. Active/relict floodplain | 0 | (1) | 2 | 3 |
| 6. Depositional bars or benches | 0 | (1) | 2 | 3 |
| 7. Recent alluvial deposits | 0 | (1) | 2 | 3 |
| 8. Headcuts | (0) | 1 | 2 | 3 |
| 9. Grade control | (0) | 0.5 | 1 | 1.5 |
| 10. Natural valley | 0 | (0.5) | 1 | 1.5 |
| 11. Second or greater order channel | No = (0) | | Yes = 3 | |

[a] artificial ditches are not rated; see discussions in manual

| B. Hydrology (Subtotal = 6) | | | | |
|---|---|---|---|---|
| 12. Presence of Baseflow | 0 | (1) | 2 | 3 |
| 13. Iron oxidizing bacteria | (0) | 1 | 2 | 3 |
| 14. Leaf litter | 1.5 | (1) | 0.5 | 0 |
| 15. Sediment on plants or debris | 0 | (0.5) | 1 | 1.5 |
| 16. Organic debris lines or piles | 0 | (0.5) | 1 | 1.5 |
| 17. Soil-based evidence of high water table? | No = 0 | | Yes = (3) | |

| C. Biology (Subtotal = 4.25) | | | | |
|---|---|---|---|---|
| 18. Fibrous roots in streambed | 3 | 2 | (1) | 0 |
| 19. Rooted upland plants in streambed | 3 | 2 | (1) | 0 |
| 20. Macrobenthos (note diversity and abundance) | (0) | 1 | 2 | 3 |
| 21. Aquatic Mollusks | (0) | 1 | 2 | 3 |
| 22. Fish | (0) | 0.5 | 1 | 1.5 |
| 23. Crayfish | 0 | (0.5) | 1 | 1.5 |
| 24. Amphibians | 0 | 0.5 | (1) | 1.5 |
| 25. Algae | (0) | 0.5 | 1 | 1.5 |
| 26. Wetland plants in streambed | FACW = (0.75); OBL = 1.5 Other = 0 | | | |

*perennial streams may also be identified using other methods. See p. 35 of manual.

Notes:

Sketch:

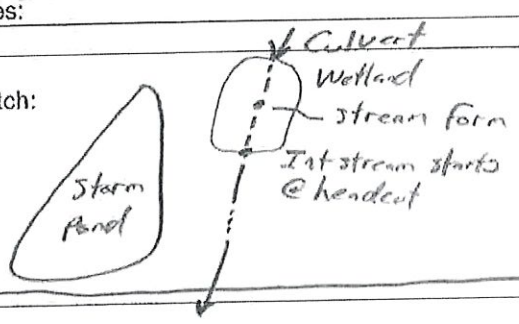




JM 2/26/2021

# Right of Entry Memo

| Site Overview | |
|---|---|
| Region | CLT |
| Store Number | 1066 |
| Town | Apex |
| Address | 0 West Williams Street |
| State | North Carolina |

| Memorandum Overview | |
|---|---|
| **Topic** | |
| Description | This Right of Entry Form gives the Town of Apex permission to enter the subject property for the purposes of conducting environmental investigations. This does not convey any ownership and the Town and it's representatives assume all risks. |

Megan Sizemore
Director of Real Estate

Director of Real Estate

Megan Sizemore
Director of Real Estate (Print Name)

Senior Director of Real Estate

Connor Bevans
Senior Director of Real Estate (Print Name)

JM 2/26/2021

NORTH CAROLINA
WAKE COUNTY

RIGHT OF ENTRY

This Right of Entry is executed this 22nd day of February, 2021 by Lidl US Operations LLC and _____ (the "_____").

WHEREAS, the Town of Apex ("Town") is seeking to make a stream buffer determination across the property known as 0 West Williams St in the Town of Apex, North Carolina and designated as PIN #0742026247 by the Wake County Revenue Department (the "**Subject Property**");

WHEREAS, the Lidl US Operations LLC are agreeable to provide the Town with this Right of Entry under the terms and conditions stated herein so that the above referenced determination may proceed.

NOW THEREFORE in light of the above premises, the Lidl US Operations LLC do hereby grant and give freely and without coercion, the right of access and entry to the Subject Property on the terms and conditions as stated below:

1. The Town of Apex and its contractors may enter the Subject Property for the purpose of conducting on-site environmental investigations and issuing a determination based on those investigations as it relates to stream buffer determination.
2. This Right of Entry does not convey to the Town any title or ownership interest in the Subject Property.
3. The Town and its employees, contractors, agents and representatives enter upon the Subject Property at their own risk and assume all risks related to the property.
4. The undersigned agrees and warrants to hold harmless the Town of Apex, its agencies, departments, contractors, and subcontractors, and discharges and waives any action, either equitable or legal that arise from the activities described above on the property except in the case of negligence by the Town.

Witness: _____ By: Megan Dismore

By: _____

JM 2/2




Soils - Intermittent JM 2/26/2021

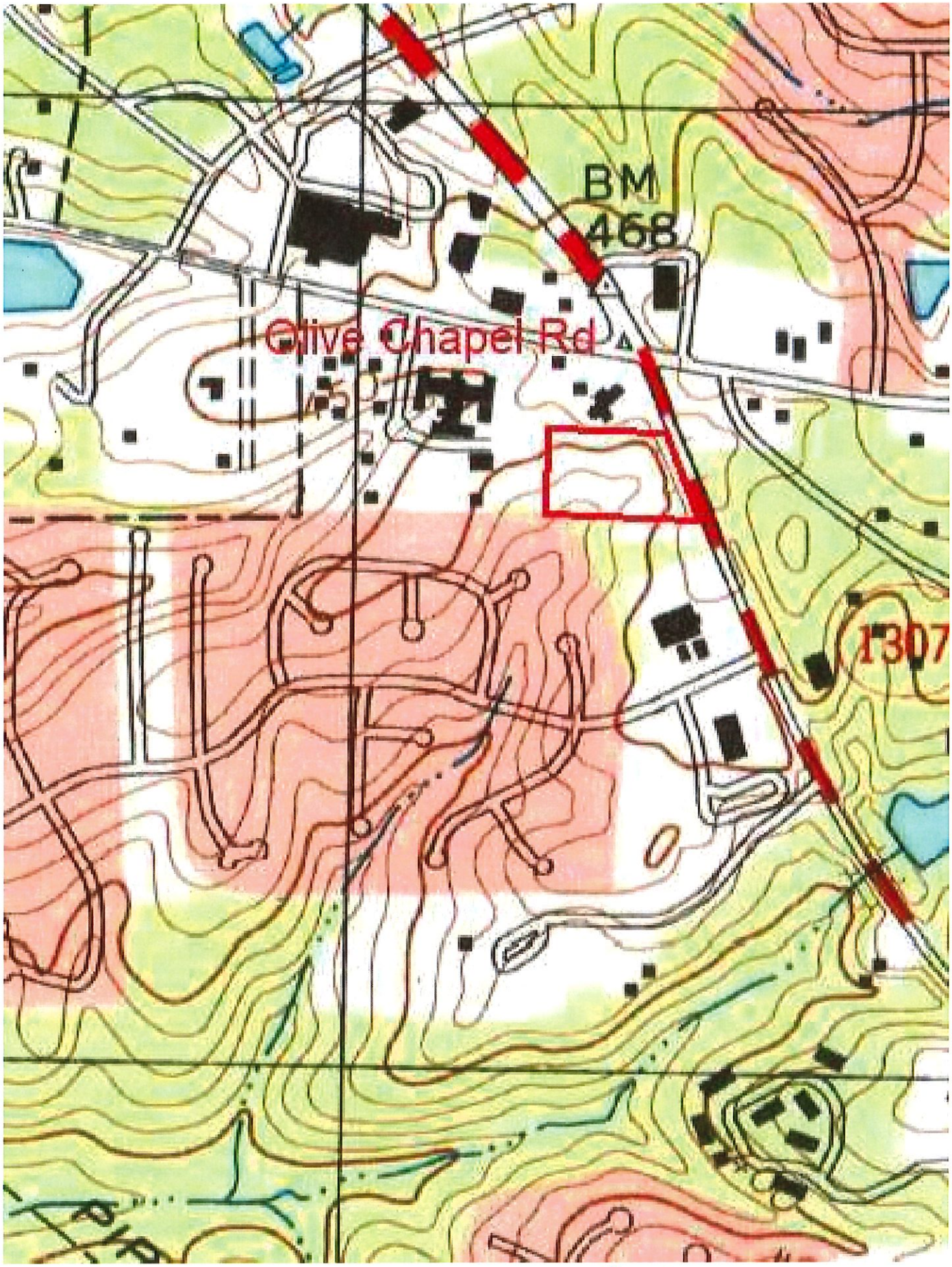


USGS NOT present



2/26/2021

# | Agenda Item | cover sheet

for consideration by the Apex Town Council

Item Type: PUBLIC HEARING

Meeting Date: March 23, 2021

## Item Details

Presenter(s): Amanda Bunce, Current Planning Manager

Department(s): Planning and Community Development

Requested Motion

Public Hearing and possible motion regarding an amendment to the Unified Development Ordinance (UDO) related to variances from the standards of the Watershed Protection Overlay District.

Approval Recommended?

The Planning and Community Development Department recommends approval.

The Planning Board heard this amendment at their March 8, 2021 meeting and unanimously recommended approval.

Item Details

Summary of UDO Amendment:

Requested by Planning Staff:

1. Amendment to Sec. 6.1.13.E.2 *Watershed Protection Overlay Districts, Modifications by Variance, Standards* in order to allow property owners to request a variance from the standards of the Watershed Protection Overlay Districts regardless of when the property was purchased. The current standard requires the Board of Adjustment to find that the property owner did not purchase the property after Sec. 6.1 was added to the Unified Development Ordinance.

Attachments

- Staff Report
- Public Notice
- Ordinance

**Requested by Planning Staff:**

1. **Amendments to Sec. 6.1.13.E.2 *Watershed Protection Overlay Districts, Modifications by Variance, Standards* in order to allow property owners to request a variance from the standards of the Watershed Protection Overlay Districts regardless of when the property was purchased. The current standard requires the Board of Adjustment to find that the property owner did not purchase the property after Sec. 6.1 was added to the Unified Development Ordinance.**

6.1.13 *Watershed Protection Overlay Districts, Modifications by Variance*

…

E) Standards

…

2) The Board of Adjustment shall make a finding of fact as to whether there are practical difficulties or unnecessary hardships that prevent compliance with the requirements at issue. A finding of practical difficulties or unnecessary hardships shall require that the following conditions are met:

…

d) The applicant did not cause the practical difficulties or unnecessary hardships by knowingly or unknowingly violating Sec. 6.1; **and**

~~e) The applicant did not purchase the property after the effective date of Sec. 6.1, and then request a variance; and~~

~~f~~**e**) The practical difficulties or unnecessary hardships are rare or unique to the applicant's property.

**PLANNING STAFF RECOMMENDATION:**
Planning staff recommends approval of the proposed UDO amendments.

**PLANNING BOARD RECOMMENDATION:**
The Planning Board heard this amendment at their March 8, 2021 meeting and unanimously recommended approval.

**Report Requirements:**
Per NCGS §160D-604, all proposed amendments to the zoning ordinance or zoning map shall be submitted to the Planning Board for review and comment. If no written report is received from the Planning Board within 30 days of referral of the amendment to the Planning Board, the Town Council may act on the amendment without the Planning Board report. The Town Council is not bound by the recommendations, if any, of the Planning Board.

**Planning Board Recommendation:**

Motion: To recommend approval as presented

Introduced by Planning Board member: Mark Steele

Seconded by Planning Board member: Tina Sherman

☑ Approval of the proposed UDO amendment(s)
☐ Approval of the proposed UDO amendment(s) with the following conditions:

☐ Denial of the proposed UDO amendment(s)

With 6 Planning Board Member(s) voting "aye"
With 0 Planning Board Member(s) voting "no"

Reasons for dissenting votes:

This report reflects the recommendation of the Planning Board, this the 8th day of March 2021.

Attest:

Michael Marks Digitally signed by Michael Marks Date: 2021.03.09 14:51:44 -05'00'
Michael Marks, Planning Board Chair

Dianne Khin Digitally signed by Dianne Khin Date: 2021.03.08 20:07:25 -05'00'
Dianne Khin, Director of Planning and Community Development

**TOWN OF APEX**
POST OFFICE BOX 250
APEX, NORTH CAROLINA 27502
PHONE 919-249-3426

# PUBLIC NOTIFICATION OF PUBLIC HEARING

## AMENDMENTS TO THE UNIFIED DEVELOPMENT ORDINANCE (UDO)

Notice is hereby given of a public hearing before the Town Council of the Town of Apex for the purpose of soliciting comments relative to the following amendment(s) to the Unified Development Ordinance:

**Requested by Planning Staff:**

1. Amendments to Sec. 6.1.13.E.2 *Watershed Protection Overlay Districts, Modifications by Variance, Standards* in order to allow property owners to request a variance from the standards of the Watershed Protection Overlay Districts regardless of when the property was purchased. The current standard requires the Board of Adjustment to find that the property owner did not purchase the property after Sec. 6.1 was added to the Unified Development Ordinance.

**Public Hearing Location:** Apex Town Hall
Council Chambers, 2nd Floor
73 Hunter Street, Apex, North Carolina

**Town Council Public Hearing Date and Time: March 23, 2021 6:00 PM**

You may attend the meeting in person or view the meeting through the Town's YouTube livestream at: https://www.youtube.com/c/townofapexgov.

If you are unable to attend, you may share comments by noon on Monday, March 22, 2021, following instructions in the http://www.apexnc.org/DocumentCenter/View/31397/. The policy includes options to provide comments by email (public.hearing@apexnc.org, 350-word limit) or voicemail (919-362-7300, 3-minute limit). You must provide your name and address for the record. These comments will be read during the Town Council meeting.

If the Council meeting is held with at least one member attending virtually, the vote on the subject of this public hearing will be delayed per State law to allow for comments to be submitted between publication of any required notice and 24 hours after the public hearing. Comments must be provided according to the means specified above. This item will be then be scheduled for the next Town Council meeting. Please note that at this subsequent meeting, Town Council may choose to vote on the item, table the discussion to a later date, or take other action which would delay Council action to another time.

The UDO can be accessed online at: http://www.apexnc.org/233.

Dianne F. Khin, AICP
Director of Planning and Community Development

Published Dates: March 2-March 23, 2021

Plan City Mee Plan Lega Lega
Not secure | www.apexnc.o...
WebEdits Municode Mtgs iMAPS Plan Viewer IDT ExecuTime Other favorites
1 of 1

**TOWN OF APEX**
POST OFFICE BOX 250
APEX, NORTH CAROLINA 27502
PHONE 919-249-3426

**PUBLIC NOTIFICATION OF PUBLIC HEARING**

AMENDMENTS TO THE UNIFIED DEVELOPMENT ORDINANCE (UDO)

Notice is hereby given of a public hearing before the Town Council of the Town of Apex for the purpose of soliciting comments relative to the following amendment(s) to the Unified Development Ordinance:

**Requested by Planning Staff:**

1. Amendments to Sec. 6.1.13.E.2 *Watershed Protection Overlay Districts, Modifications by Variance, Standards* in order to allow property owners to request a variance from the standards of the Watershed Protection Overlay Districts regardless of when the property was purchased. The current standard requires the Board of Adjustment to find that the property owner did not purchase the property after Sec. 6.1 was added to the Unified Development Ordinance.

**Public Hearing Location:** Apex Town Hall
Council Chambers, 2nd Floor
73 Hunter Street, Apex, North Carolina

**Town Council Public Hearing Date and Time: March 23, 2021 6:00 PM**

You may attend the meeting in person or view the meeting through the Town's YouTube livestream at: https://www.youtube.com/c/townofapexgov.

If you are unable to attend, you may share comments by noon on Monday, March 22, 2021, following instructions in the http://www.apexnc.org/DocumentCenter/View/31397/. The policy includes options to provide comments by email (public.hearing@apexnc.org, 350-word limit) or voicemail (919-362-7300, 3-minute limit). You must provide your name and address for the record. These comments will be read during the Town Council meeting.

If the Council meeting is held with at least one member attending virtually, the vote on the subject of this public hearing will be delayed per State law to allow for comments to be submitted between publication of any required notice and 24 hours after the public hearing. Comments must be provided according to the means specified above. This item will be then be scheduled for the next Town Council meeting. Please note that at this subsequent meeting, Town Council may choose to vote on the item, table the discussion to a later date, or take other action which would delay Council action to another time.

The UDO can be accessed online at: http://www.apexnc.org/233.

Dianne F. Khin, AICP
Director of Planning and Community Development

Published Dates: March 2-March 23, 2021



12:48 PM
3/2/2021

**TOWN OF APEX**
POST OFFICE BOX 250
APEX, NORTH CAROLINA 27502
PHONE 919-249-3426

# REVISED PUBLIC NOTIFICATION OF PUBLIC HEARING

## AMENDMENTS TO THE UNIFIED DEVELOPMENT ORDINANCE (UDO)

Notice is hereby given of a public hearing before the Town Council of the Town of Apex for the purpose of soliciting comments relative to the following amendment(s) to the Unified Development Ordinance:

**Requested by Planning Staff:**

1. Amendments to Sec. 6.1.13.E.2 *Watershed Protection Overlay Districts, Modifications by Variance, Standards* in order to allow property owners to request a variance from the standards of the Watershed Protection Overlay Districts regardless of when the property was purchased. The current standard requires the Board of Adjustment to find that the property owner did not purchase the property after Sec. 6.1 was added to the Unified Development Ordinance.

**Public Hearing Location:** ~~Apex Town Hall~~
~~Council Chambers, 2nd Floor~~
~~73 Hunter Street, Apex, North Carolina~~

**Town Council Remote Public Hearing Date and Time: March 23, 2021 6:00 PM**

You may ~~attend the meeting in person or~~ view the meeting through the Town's YouTube livestream at: https://www.youtube.com/c/townofapexgov.

~~If you are unable to attend, y~~You may share comments by noon on Monday, March 22, 2021 by email (public.hearing@apexnc.org, 350-word limit) or voicemail (919-362-7300, 3-minute limit) according to the Remote Participation Policy at: http://www.apexnc.org/DocumentCenter/View/31397/. You must provide your name and address for the record. These comments will be read during the Town Council meeting.

~~If the Council meeting is held with at least one member attending virtually, t~~The vote on the subject of this public hearing will be delayed per State law to allow for comments to be submitted between publication of any required notice and 24 hours after the public hearing. Comments must be provided according to the means specified above. This item will be then be scheduled for the next Town Council meeting. Please note that at this subsequent meeting, Town Council may choose to vote on the item, table the discussion to a later date, or take other action which would delay Council action to another time.

The UDO can be accessed online at: http://www.apexnc.org/233.

Dianne F. Khin, AICP
Director of Planning and Community Development

Published Dates: ~~March 2~~ March 15-March 23, 2021

Not secure | www.apexnc.org/Docu...
WebEdits | Municode Mtgs | iMAPS | Plan Viewer | IDT | ExecuTime | Other favorites
1 of 1

**TOWN OF APEX**
POST OFFICE BOX 250
APEX, NORTH CAROLINA 27502
PHONE 919-249-3426

# REVISED PUBLIC NOTIFICATION OF PUBLIC HEARING

## AMENDMENTS TO THE UNIFIED DEVELOPMENT ORDINANCE (UDO)

Notice is hereby given of a public hearing before the Town Council of the Town of Apex for the purpose of soliciting comments relative to the following amendment(s) to the Unified Development Ordinance:

**Requested by Planning Staff:**

1. Amendments to Sec. 6.1.13.E.2 *Watershed Protection Overlay Districts, Modifications by Variance, Standards* in order to allow property owners to request a variance from the standards of the Watershed Protection Overlay Districts regardless of when the property was purchased. The current standard requires the Board of Adjustment to find that the property owner did not purchase the property after Sec. 6.1 was added to the Unified Development Ordinance.

**Public Hearing Location:** ~~Apex Town Hall~~
~~Council Chambers, 2nd Floor~~
~~73 Hunter Street, Apex, North Carolina~~

**Town Council Remote Public Hearing Date and Time: March 23, 2021 6:00 PM**

You may ~~attend the meeting in person or~~ view the meeting through the Town's YouTube livestream at: https://www.youtube.com/c/townofapexgov.

~~If you are unable to attend, y~~You may share comments by noon on Monday, March 22, 2021 by email (public.hearing@apexnc.org, 350-word limit) or voicemail (919-362-7300, 3-minute limit) according to the Remote Participation Policy at: http://www.apexnc.org/DocumentCenter/View/31397/. You must provide your name and address for the record. These comments will be read during the Town Council meeting.

~~If the Council meeting is held with at least one member attending virtually, t~~The vote on the subject of this public hearing will be delayed per State law to allow for comments to be submitted between publication of any required notice and 24 hours after the public hearing. Comments must be provided according to the means specified above. This item will be then be scheduled for the next Town Council meeting. Please note that at this subsequent meeting, Town Council may choose to vote on the item, table the discussion to a later date, or take other action which would delay Council action to another time.

The UDO can be accessed online at: http://www.apexnc.org/233.

Dianne F. Khin, AICP
Director of Planning and Community Development

Published Dates: ~~March 2~~ March 15-March 23,



3:36 PM
3/15/2021

AN ORDINANCE TO AMEND CERTAIN SECTIONS OF THE UNIFIED DEVELOPMENT ORDINANCE

**BE IT ORDAINED by the Town Council of the Town of Apex as follows:**

**Section 1**. **Section 6.1.13.E.2 of the Unified Development Ordinance is amended to read as follows with additions shown as bold underlined text and deletions shown as struck-through text:**

6.1.13 *Watershed Protection Overlay Districts, Modifications by Variance*

…

E) Standards

…

2) The Board of Adjustment shall make a finding of fact as to whether there are practical difficulties or unnecessary hardships that prevent compliance with the requirements at issue. A finding of practical difficulties or unnecessary hardships shall require that the following conditions are met:

…

d) The applicant did not cause the practical difficulties or unnecessary hardships by knowingly or unknowingly violating Sec. 6.1; **and**

~~e) The applicant did not purchase the property after the effective date of Sec. 6.1, and then request a variance; and~~

~~f~~**e**) The practical difficulties or unnecessary hardships are rare or unique to the applicant's property.

**Section 2.** The Director of Planning and Community Development and/or Town Manager are hereby authorized to renumber, revise formatting, correct typographic errors, to verify and correct cross references, indexes and diagrams as necessary to codify, publish, and/or accomplish the provisions of this ordinance or future amendments as long as doing so does not alter the terms of this ordinance.

**Section 3.** All ordinances or parts of ordinances in conflict with this ordinance are hereby repealed. If any section, paragraph, subdivision, clause or provision of this ordinance shall be adjudged invalid, such adjudication shall apply only to such section, paragraph, subdivision, clause or provision so adjudged and the remainder of the ordinance shall be deemed valid and effective.

**Section 4.** The ordinance shall be effective upon enactment on the _____ day of _____ 2021.

Introduced by Council Member _____

Seconded by Council Member _____

Attest: TOWN OF APEX

_____ _____

Donna Hosch, MMC, NCCMC
Town Clerk

Jacques K. Gilbert
Mayor

Approved As To Form:

_____

Laurie L. Hohe
Town Attorney

# | Agenda Item | cover sheet

for consideration by the Apex Town Council

Item Type: NEW BUSINESS

Meeting Date: March 23, 2020

## Item Details

Presenter(s): Shawn Purvis, Assistant Town Manager

Department(s): Administration

Requested Motion

Possible motion to provide financial support to Evergreen Construction Company for the affordable housing project at Abbey Spring in the form of grants from the Affordable Housing Fund for Recreation Fees-in-lieu and a loan for construction contingent upon final project approval

Approval Recommended?

Yes

Item Details

Evergreen Construction has submitted two requests on behalf of the ownership entity to be formed for the permanent financing of Abbey Spring Walk- 1) a grant totaling $171,700 to offset recreation fees-in-lieu, and 2) loan funding of up to $500,000. Abbey Spring is a proposed 84-unit affordable housing complex for seniors to be located next to 511 W. Williams St. Evergreen will submit the development as a 9% tax-exempt bond development and is leveraging additional funding from Wake County. The Town's financial support would come from the Affordable Housing Fund with a future commitment from the fund in FY2022-2023.

Attachments

- Staff memo
- Letter requesting support

March 9, 2020

**To:** Mayor Gilbert and Town Council

**Cc:** Ralph Clark, Interim Town Manager

**From:** Shawn Purvis, Assistant Town Manager

**Re:** Evergreen, Abbey Spring Support Request

The purpose of this memo is to provide information related to the financial support requested by Evergreen Construction Company for the Abbey Spring project. This memo provides a brief background of the project, the purpose of the financial support, and information on the fiscal impact on the Town.

## Background

Town Council is aware of a pending project for a proposed senior affordable housing complex by Evergreen Construction called Abbey Spring. The 84-unit complex would be located on W. Williams Street next to the Post Office. Evergreen is pursuing a nine percent tax credit for the project and is requesting additional financial support from Wake County and Apex. Evergreen has requested $2 million in loan funding from Wake County. Wake County requires funding applicants to request financial support from the corresponding municipality. Evergreen is requesting a grant to offset recreation fees-in-lieu in addition to loan funding from Apex.

North Carolina General Statute (N.C.G.S.) 160A-20.1 provides authority for the Town to expend funds for public purposes, including providing affordable housing, and N.C.G.S. 157-3(12)(e) authorizes the Town "to provide grants . . . and other programs of financial assistance to public or private developers of housing for persons of low income, or moderate income, or low and moderate income."

## Discussion

Evergreen is requesting a grant for $171,700 to offset recreation fees-in-lieu. Evergreen also is requesting a $500,000 loan from the Town. The terms of the loan would mirror their request of County at two percent on the permanent loan for a 30-year term. The loan would be fully amortizing with a variable repayment schedule. During construction and in the permanent phase the Town of Apex would hold third lien, subordinate to a bank loan and Wake County.

Funding for the grant and loan would come from the Town's Affordable Housing Fund (AHF). The FY20-21 Adopted Budget included $1,020,000 in the fund. Town Council has committed funds during the current fiscal year that represent nearly all expected FY20-21 AHF revenues. Town Council has approved a $165,000 grant and a $1 million loan for another affordable housing project to be split between FY20-21 and FY21-22. Although Evergreen is seeking a commitment of funds now for their application, they are requesting funding from the Town in FY22-23. Town Council can commit funds from expected future earnings. Based on current trends, the Town can expect a cent on the tax rate to equal between $1.16 million and $1.19 million in FY22-23. The only potential commitment the Town has at this time for FY22-23 is the continuation of the Apex Housing Rehabilitation Program at $250,000. Committing funds for this project from FY22-23 would leave between $238,000 and 268,000 in the Affordable Housing Fund for FY22-23.

**Recommendation**

The Abbey Spring project aligns with Town Council's goal to increase affordable housing options in Apex. Committing funds to the project would support a Town Council initiative. It is important to note that Town Council has recently approved the Apex Affordable Housing Plan. The plan recommends multiple initiatives and programs that will require funding. When deciding on approval of the grant and loan, Town Council should consider the impact the amounts would have on the project's success as well as the impact on the Town's available funds for other projects and programs.

EVERGREEN
CONSTRUCTION COMPANY

January 22, 2021

Mr. Shawn Purvis
Assistant Town Manager
Town of Apex
73 Hunter Street
Apex, NC 27502

Re: Abbey Spring Funding Request

Dear Mr. Purvis:

Abbey Spring – A Senior Living Community is a proposed new construction development that is to be located next to 511 W Williams Street in Apex. The project will consist of (42) one-bedroom, one bath units and (42) two- bedroom, one bath units for persons 55 years of age and older. The building will be a 3 story L shape design, served by two elevators with all residential units opening into an interior hallway. The main entrance will have a call panel system and all exterior doors self-locking. On-site amenities will include a main lobby, a TV lounge area, a computer center, a fitness center, a multi-purpose room with kitchen, coin- op laundry facilities and tenant storage areas.

All 84 units will be affordable to seniors at or below 60% of the area median income with a portion of those set aside at or below 50%, 40% and 30% of the area median income. In addition, 10% of the units will be targeted to persons with disabilities or who are homeless with KEY rental assistance available to those persons through the North Carolina Housing Finance Agency (NCHFA) and 10% will be set aside for Wake County Rental Assistance Housing Program (RAHP) holders.

This proposal has been submitted to the North Carolina Housing Finance Agency as a 2021 application, requesting 9% credits along with a $800,000 RPP loan request. A funding request has also been made to Wake County in the form of a construction/permanent loan in the amount of $2,000,000 at a 2% rate with a 30-year term and amortization period. Funding requests to Wake County also require the applicant to request financial support from local municipalities that offer gap financing for affordable housing. In order for our proposal to be competitive, Evergreen is requesting the Town of Apex provide a permanent loan in the amount of $500,000 at the same terms as the county's loan request, along with a $171,700 parks and recreation fee reimbursement. I have included the applications sent to Wake County and to NCHFA for the town to get a better understanding of our proposal.

I believe this development will provide a much-needed housing alternative for Apex's growing senior population.

Please advise if I can be of further service.

Sincerely,

Timothy D. Morgan

Timothy G. Morgan
Vice President

# | Agenda Item | cover sheet

for consideration by the Apex Town Council

Item Type: NEW BUSINESS

Meeting Date: March 23, 2021

## Item Details

Presenter(s): Joanna Helms, Director

Department(s): Economic Development

Requested Motion

Possible Motion to approve a Development Agreement with The Crown Companies, LLC and to authorize the Town Manager to execute the same.

Approval Recommended?

Yes

Item Details

In 2017, the Town and the property owner of Cash Corporate Center entered into an agreement to co-develop a 121.3 acre site for the purpose of industrial and/or commercial recruitment and to increase the business prospects of the Town. The current agreement states that the owner of the site has the option to release and sell all or portions of the property if the business or entity purchasing meets certain criteria of an acceptable business. The owner would be responsible to pay the Town a pro rata share of development costs incurred to date by the Town and a portion of the equity in the property. The Town is working with a potential developer that proposes to purchase the remaining available property at Cash Corporate Center (approximately 83 acres) with the intent to construct speculative buildings and/or prepare pad ready sites to expedite the location of new business and industry at the site. Approving this new development agreement with The Crown Companies, LLC would release parties from the original agreement and enhance the Town's position to attract new business and industry and jobs.

A copy of the Development Agreement will be forthcoming.

Attachments

-